ACE
Engineering Publications
(A Sister Concern of ACE Engineering Academy, Hyderabad)

Hyderabad | Delhi | Bhopal | Pune | Bhubaneswar | Bengaluru | Lucknow | Patna | Chennai | Vijayawada | Visakhapatnam | Tirupati | Kolkata | Ahmedabad

Bits & Bytes

GATE
PRACTICE BOOKLET

Computer Science & Information Technology
(Volume - II)

(Discrete Mathematics, Computer Organization, Digital Logic, Operating Systems, Theory of Computation, Compiler Design & General Aptitude)

1116 Expected Questions with Solutions

ACE is the leading institute for coaching in ESE, GATE & PSUs

Address: Sree Sindhi Guru Sangat Sabha Association, # 4-1-1236/1/A, King Koti, Abids, Hyderabad-500001.

Ph: 040-23234418 / 19 / 20 / 21, 040 - 24750437

11 All India 1st Ranks in ESE

48 All India 1st Ranks in GATE

Scanned with CamScanner

Syllabus for Computer Science & Information Technology (CSIT)

Discrete Mathematics

Mathematical Logic: Propositional Logic, First-order Logic.

Probability: Random variables and expectation, Conditional probability, Independent random variables, Distributions (Uniform, Normal, Exponential, Poisson, Binomial), Mean, Median, Mode and Standard Deviation.

Set Theory: Sets, Relations, Partial orders, Lattices, Functions, Groups, Recurrence relations, Generating functions.

Combinatorics: Counting, Recurrence relations, Generating functions.

Elementary graph theory: Basic properties, Connectivity, matchings, Coloring.

Linear Algebra: Algebra of Matrices, Determinants, Systems of linear equations, Eigen values & Eigen vectors, LU decomposition for systems of linear equations.

Calculus: Limit, Continuity & Differentiability, Mean value Theorems, Integration, Partial derivatives, Maxima & Minima.

Theory Of Computation

Regular languages and finite automata, Context free languages and Push-down automata, Recursively enumerable sets and Turing machines, Undecidability.

Compiler Design

Lexical analysis, Parsing, Syntax directed translation, Runtime environments, Intermediate code generation.

Database Management Systems

ER-model, Relational Model (Relational Algebra, Tuple Calculus), Database Design (Integrity Constraints, Normal Forms), Query Languages (SQL), File Structures (Sequential Files, Indexing, B and B+ Trees), Transactions and Concurrency Control.

Scanned with CamScanner

Computer Networks

Concept of Layering, LAN Technologies (Ethernet), Flow and Error Control Techniques, Switching, IPv4/IPv6, Routers and Routing Algorithms (Distance Vector, Link State), TCP/UDP and Sockets, Congestion Control, Application Layer Protocols (DNS, SMTP, POP, FTP, HTTP), Basics of Wi-Fi. Network Security: Authentication, Basics of Public Key and Private Key Cryptography, Digital Signatures and Certificates, Firewalls.

Data Structures

Arrays, Stacks, Recursion, Queues, Linked Lists, Trees, Binary search trees, AVL trees, Graphs and Hashing

Programming Languages

Programming in C; Recursion

Operating Systems

Processes, Threads, Inter-Process Communication, Concurrency and Synchronization, Deadlock. CPU Scheduling, Memory Management and Virtual Memory, File Systems.

Digital Logic

Boolean Algebra. Combinational and Sequential Circuits. Minimization. Number Representations and Computer Arithmetic (Fixed and Floating Point).

Algorithms

Searching, Sorting, Hashing. Asymptotic Worst Case Time and Space Complexity. Algorithm Design Techniques: Greedy, Dynamic Programming and Divide and Conquer. Graph Search, Minimum Spanning Trees, Shortest Paths.

Computer Organization and Architecture

Machine Instructions and Addressing Modes. ALU, Data-Path and Control Unit. Instruction Pipelining. Memory Hierarchy: Cache, Main Memory and Secondary Storage; I/O Interface (Interrupt and DMA mode).

Scanned with CamScanner

CONTENTS

Name of the Subject	Page No.
I. Discrete Mathematics	**01 - 56**
1. Mathematical Logic	02 - 11
2. Combinatorics	12 - 18
3. Graph Theory	19 - 21
4. Set Theory	22 - 30
5. Linear Algebra	31 - 37
6. Probability	38 - 48
7. Calculus	49 - 56
II. Computer Organization	**57 - 100**
1. Computer Arithmetic	58 - 65
2. Memory Organization	66 - 76
3. Pipeline Organization	77 - 81
4. CPU Organization	82 - 87
5. Control Unit Design	88 - 91
6. I/O Organization	92 - 94
7. Secondary Memories	95 - 100
III. Digital Logic	**101 - 138**
1. Number Systems	102 - 105
2. Boolean Algebra, Logic Gates & K-Maps	106 - 115
3. Combinational Circuits	116 - 127
4. Sequential Circuits	128 - 138
IV. Operating Systems	**139 - 176**
1. Process Management – I	140 - 149
2. Process Management – II	150 - 159
3. Deadlocks	160 - 162
4. Memory Management	163 - 171
5. File Systems	172 - 176
V. Theory of Computation	**177 - 230**
1. Finite Automata & Regular sets	178 - 195
2. CFL and PDA	196 - 213
3. Turing Machine, Modifications, csls	214 - 230

Scanned with CamScanner

VI. Compiler Design 231 - 256

1. Lexical Analysis ..... 232 - 236
2. Parsing Techniques ..... 237 - 249
3. Syntax Directed Translation Schema ..... 250 - 252
4. Intermediate Code Generation ..... 253 - 256

VII. General Aptitude 257 - 309

1. Numerical Ability ..... 258 - 287
2. Verbal Ability ..... 288 - 309

Scanned with CamScanner

Discrete Mathematics

Scanned with CamScanner

Chapter 1 Mathematical Logic

Equivalences:

If P, Q and R are any three compound propositions, then the following equivalences are valid.

E_1 **Double negation:**

$\sim(\sim P) \Leftrightarrow P$

E_2 **Commutative laws:**

$(P \wedge Q) \Leftrightarrow (Q \wedge P)$

$(P \vee Q) \Leftrightarrow (Q \vee P)$

E_3 **Associative laws:**

$(P \wedge Q) \wedge R \Leftrightarrow P \wedge (Q \wedge R)$

$(P \vee Q) \vee R \Leftrightarrow P \vee (Q \vee R)$

E_4 **Distributive laws:**

$P \wedge (Q \vee R) \Leftrightarrow (P \wedge Q) \vee (P \wedge R)$

$P \vee (Q \wedge R) \Leftrightarrow (P \vee Q) \wedge (P \vee R)$

E_5 **De Morgan's laws:**

$\sim(P \wedge Q) \Leftrightarrow (\sim P \vee \sim Q)$

$\sim(P \vee Q) \Leftrightarrow (\sim P \wedge \sim Q)$

E_6 **Idempotent laws:**

$(P \vee P) \Leftrightarrow P$

$(P \wedge P) \Leftrightarrow P$

E_7 **Absorption laws:**

$P \vee (P \wedge Q) \Leftrightarrow P$

$P \wedge (P \vee Q) \Leftrightarrow P$

More identities:

E_8 $(P \vee T) \Leftrightarrow T$

E_9 $(P \vee (R \vee \sim R)) \Leftrightarrow T$

E_{10} $(P \wedge T) \Leftrightarrow P$

E_{11} $(P \wedge (R \vee \sim R)) \Leftrightarrow P$

E_{12} $(P \wedge F) \Leftrightarrow F$

E_{13} $(P \vee F) \Leftrightarrow P$

E_{14} $(P \wedge \sim P) \Leftrightarrow F$

E_{15} $(P \vee \sim P) \Leftrightarrow T$

E_{16} $(P \rightarrow Q) \Leftrightarrow (\sim P \vee Q)$

E_{17} $\sim(P \rightarrow Q) \Leftrightarrow (P \wedge \sim Q)$

E_{18} $(P \rightarrow Q) \Leftrightarrow (\sim Q \rightarrow \sim P)$

E_{19} $(P \leftrightarrow Q) \Leftrightarrow (P \rightarrow Q) \wedge (Q \rightarrow P)$

E_{20} $\sim(P \leftrightarrow Q) \Leftrightarrow ((P \wedge \sim Q) \vee (\sim P \wedge Q))$

E_{21} $(P \rightarrow (Q \rightarrow R)) \Leftrightarrow ((P \wedge Q) \rightarrow R)$

E_{22} $\sim(P \leftrightarrow Q) \Leftrightarrow ((P \vee Q) \wedge \sim (P \wedge Q))$

01. Which of the following propositions is a tautology?

(a) $(p \vee q) \rightarrow p$ (b) $p \vee (q \rightarrow p)$

(c) $p \vee (p \rightarrow q)$ (d) $p \rightarrow (p \rightarrow q)$

02. Consider the following sets of premises

S_1 : $\{\sim p \vee q, \sim q, p\}$

S_2 : $\{p \vee q, \sim p \vee q, p \vee \sim q, \sim p \vee \sim q\}$

Which of the following is true?

(a) S_1 is consistent and S_2 is inconsistent

(b) S_1 is inconsistent and S_2 is consistent

(c) Both S_1 and S_2 are consistent

(d) Both S_1 and S_2 are inconsistent

Scanned with CamScanner

03. Which of the following statements are tautologies?

$S_1 : \sim(p \vee q) \vee (\sim p \wedge q) \vee p$

$S_2 : [(p \wedge \sim q) \rightarrow r] \rightarrow [p \rightarrow (q \vee r)]$

(a) S_1 is a tautology and S_2 is not a tautology

(b) S_2 is a tautology and S_1 is not a tautology

(c) Both S_1 and S_2 are tautologies

(d) Neither S_1 nor S_2 is a tautology

04. Which of the following is **not** a Tautology?

(a) $q \rightarrow (p \rightarrow q)$

(b) $(\sim p) \rightarrow (p \rightarrow q)$

(c) $(p \wedge q) \rightarrow (p \vee q)$

(d) $(\sim p \wedge q) \rightarrow (p \vee \sim q)$

05. Consider the following equivalences.

$E_1 : (P \rightarrow Q) \rightarrow Q \Leftrightarrow (P \vee Q)$

$E_2 : (P \rightarrow (Q \vee R)) \Leftrightarrow ((P \rightarrow Q) \vee (P \rightarrow R)$

Which of the following is true?

(a) E_1 is True and E_2 is False

(b) E_1 is False and E_2 is True

(c) Both E_1 and E_2 are True

(d) Both E_1 and E_2 are False

06. If $P \rightarrow Q$ is false, then consider the following statements:

$S_1: \sim (P \wedge Q) \rightarrow Q$

$S_2: \sim P \vee (P \leftrightarrow Q)$

Which of the following is true?

(a) S_1 is true & S_2 is false

(b) S_1 is false & S_2 is true

(c) Both S_1 & S_2 are true

(d) Both S_1 & S_2 are false

07. If P and Q are true; R, S and T are false then which of the following is **false**?

(a) $P \rightarrow (R \rightarrow Q)$

(b) $(P \rightarrow S) \wedge (S \rightarrow T)$

(c) $\{Q \rightarrow (R \rightarrow S)\} \wedge \{(P \rightarrow S) \rightarrow \sim T\}$

(d) $(\sim Q) \rightarrow [R \rightarrow \{R \rightarrow (P \vee S)\}]$

08. Which of the following is **true**?

(a) $p \rightarrow (q \rightarrow r) \Leftrightarrow (p \leftrightarrow q) \rightarrow r$

(b) $(p \wedge q) \Leftrightarrow \sim(p \leftrightarrow \sim q)$

(c) If $(p \rightarrow q) \Leftrightarrow (p \rightarrow r)$ then $(q = r)$

(d) $(p \wedge (q \vee p)) \Leftrightarrow (p \vee (q \wedge p))$

09. Which of the following statement formulae are tautologies?

$S_1 : [(P \rightarrow Q) \wedge (R \rightarrow S) \wedge (P \vee R)] \rightarrow (Q \vee S)$

$S_2 : \{[P \rightarrow (Q \vee R)] \wedge (\sim Q)\} \rightarrow (P \rightarrow R)$

$S_3 : \{[(P \vee Q) \rightarrow R] \wedge (\sim P)\} \rightarrow (Q \vee R)$

(a) only S_1 and S_2 (b) only S_2 and S_3

(c) only S_3 and S_1 (d) S_1, S_2 and S_3

10. A binary relation * is defined by the following truth table

x	y	x * y
T	T	F
T	F	T
F	T	T
F	F	T

Which of the following is **not** equivalent to (x * y)?

(a) $\sim(x \wedge y)$ (b) $x \rightarrow y$

(c) $x \rightarrow \sim y$ (d) $y \rightarrow \sim x$

Scanned with CamScanner

11. Consider the statement
"Not all birds can fly"
Suppose B(x) : x is a bird and
F(x) : x can fly
Which of the following formulas represent the above statement in predicate calculus?
(a) $\sim(\exists x\,(B(x) \wedge F(x))$
(b) $\exists x\,(B(x) \wedge \sim F(x))$
(c) $\forall x\,(B(x) \rightarrow \sim F(x))$
(d) none

12. Consider the premises
$$\forall x\{p(x) \vee q(x)\}$$
$$\exists x\{\sim p(x)\}$$
$$\forall x\{\sim q(x) \vee r(x)\}$$
$$\forall x\{s(x) \rightarrow \sim r(x)\}$$
Which of the following conclusions follow from the above premises?
(a) $\exists x\ s(x)$ (b) $\exists x \sim s(x)$
(c) $\forall x\ s(x)$ (d) $\forall x \sim s(x)$

13. The negation of "every complete bipartite graph is not planar" in predicate calculus is_____.
C(x) : x is a complete graph
B(x) : x is bipartite
P(x) : x is planar

(a) $\sim[\forall x\,(C(x) \wedge B(x)) \rightarrow P(x)]$
(b) $\exists x\,(C(x) \wedge B(x) \wedge P(x))$
(c) $\exists x\,(C(x) \wedge B(x) \rightarrow P(x))$
(d) None

14. let P(x) denotes x is a politician, R(x) denotes x is rich and F(x) denotes x is famous. Consider the statement 'every politician is rich and famous'. The corresponding first order logic sentence is
(a) $\forall x\ \{P(x) \rightarrow (R(x) \wedge F(x))\}$
(b) $\forall x\ \{P(x) \wedge (R(x) \rightarrow F(x))\}$
(c) $\forall x\ \{P(x) \rightarrow (R(x) \vee F(x))\}$
(d) $\forall x\ \{P(x) \vee (R(x) \rightarrow F(x))\}$

15. Which of the following well formed formulae is **not** valid?
(a) $\forall x\{A(x) \rightarrow B(x)\} \rightarrow \{\forall x\ A(x) \rightarrow \forall x\ B(x)\}$
(b) $\forall x\{A(x) \wedge B(x)\} \rightarrow \{\forall x\ A(x) \wedge \forall x\ B(x)\}$
(c) $\forall x\{A(x) \vee B(x)\} \rightarrow \{\forall x\ A(x) \vee \forall x\ B(x)\}$
(d) $\exists x\{A(x) \vee B(x)\} \rightarrow \{\exists x\ A(x) \vee \exists x\ B(x)\}$

16. Which of the following is **not** valid?
(a) $\exists x\ \{A(x) \vee B(x)\} \Leftrightarrow \{\exists x\ A(x) \vee \exists x\ B(x)\}$
(b) $\forall x\ \{A(x) \wedge B(x)\} \Leftrightarrow \{\forall x\ A(x) \wedge \forall x\ B(x)\}$
(c) $\exists x\ \{A(x) \rightarrow B(x)\} \Leftrightarrow \{\forall x\ A(x) \rightarrow \exists x\ B(x)\}$
(d) $\forall x\ \{A(x) \rightarrow B(x)\} \Leftrightarrow \{\forall x\ A(x) \rightarrow \forall x\ B(x)\}$

17. Which of the following arguments is **not** valid?
(a) $\{\forall x(C(x) \rightarrow P(x)), \exists x(C(x) \wedge L(x))\}$
$\Rightarrow \exists x\{P(x) \wedge L(x)\}$
(b) The conclusion $\exists x\ P(x)$ follows from the premises $\{\exists x(P(x) \vee Q(x))$ and $\forall x \sim Q(x)\}$
(c) The conclusion $\exists x \sim P(x)$ follows from the premises $\{\forall x(P(x) \rightarrow Q(x))$ and $\exists x \sim Q(x)\}$
(d) $\exists x\ B(x)$ follows from the premises $\forall x\ (A(x) \vee B(x))$ and $\forall x\ A(x)\}$

Scanned with CamScanner

18. Which of the following is **not** valid?

(a) $\exists x\ \forall y\ P(x,y) \rightarrow \forall x \exists y\ P(y,x)$

(b) $\exists y\ \forall x\ P(y,x) \rightarrow \forall y \exists x\ P(x,y)$

(c) $\exists x\ \forall y\ P(x,y) \rightarrow \exists x\ \exists y\ P(x,y)$

(d) $\exists x\ \forall y\ P(x,y) \rightarrow \forall x\ \exists y\ P(x,y)$

19. Consider the following arguments

Argument I

The conclusion $\forall x(F(x) \rightarrow \sim S(x))$ follows from the premises

$\{\exists x\ (F(x) \wedge S(x)) \rightarrow \forall y\ (M(y) \rightarrow W(y))$ and $\exists y\ (M(y) \wedge \sim W(y))\}$

Argument II

The conclusion $\forall x(P(x) \rightarrow Q(x))$ follows from the hypothesis $\exists x\ P(x) \rightarrow \forall x\ Q(x)$

Which of the following is true?

(a) Argument I is valid but argument II is not valid

(b) Argument II is valid but argument I is not valid

(c) Both the arguments are valid

(d) Both the arguments are not valid

Scanned with CamScanner

Solutions

01. Ans: (c)

Sol: (a) When q is true and p is false, the given formula is false. Therefore, the given formula is not a tautology.

(b) When p is false and q is true, the given formula is false. Therefore, the given formula is not a tautology.

(c) When p is true, then given formula is true.

When p is false, Then given formula is true. The given formula is a tautology.

(d) When p is true and q is false, the given formula is false. Therefore, the given formula is not a tautology.

02. Ans: (d)

Sol: $S_1 : \{\sim p \vee q, \sim q, p\}$

The premises are inconsistent, if their conjunction is false

$(\sim p \vee q) \wedge \sim q \wedge p$

$\Leftrightarrow (\sim p \vee q) \wedge (p \wedge \sim q)$ (Commutative law)

$\Leftrightarrow (\sim p \vee q) \wedge \sim(\sim p \vee q)$ (Demorgan's law)

$\Leftrightarrow F$

$\therefore S_1$ is inconsistent

$S_2 : \{p \vee q, \sim p \vee q, p \vee \sim q, \sim p \vee \sim q\}$

Consider,

$(p \vee q) \wedge (p \vee \sim q) \wedge (\sim p \vee q) \wedge (\sim p \vee \sim q)$

$\Leftrightarrow \{p \vee (q \wedge \sim q)\} \wedge \{\sim p \vee (q \wedge \sim q)\}$

(Distributive law)

$\Leftrightarrow p \wedge \sim p \quad (\because q \wedge \sim q \Leftrightarrow F)$

$\Leftrightarrow F$

$\therefore S_2$ is inconsistent

03. Ans: (c)

Sol: $S_1: \sim(p \vee q) \vee (\sim p \wedge q) \vee p$

$= \overline{(p+q)} + (\overline{p}.q) + p$

$= (\overline{p}.\overline{q} + \overline{p}.q) + p$

$= \{\overline{p}.(\overline{q} + q)\} + p$

$= (\overline{p}.1) + p$

$= \overline{p} + p = 1$

$\therefore S_1$ is a tautology

$S_2: \{(p \wedge \sim q) \rightarrow r\} \rightarrow \{p \rightarrow (q \vee r)\}$

Case 1:

When p has truth value true, the given formula reduce to

$(\sim q \rightarrow r) \rightarrow (q \vee r)$

$\Leftrightarrow (q \vee r) \rightarrow (q \vee r)$

$\Leftrightarrow T$

Case 2:

When p has truth value false, the given formula reduces to

$(F \rightarrow r) \rightarrow (F \rightarrow (q \vee r))$

$\Leftrightarrow T \rightarrow T$

$\Leftrightarrow T$

$\therefore S_2$ is a tautology

04. Ans: (d)

Sol: (a) $q \rightarrow (p \rightarrow q)$ is a tautology, By rule I_4

(b) $\sim p \rightarrow (p \rightarrow q)$ is a tautology, By rule I_3

Scanned with CamScanner

(c) $(p \wedge q) \rightarrow (p \vee q)$ is a tautology, because whenever the antecedent $(p \wedge q)$ is true, the consequent $(p \vee q)$ is also true.

(d) $(\sim p \wedge q) \rightarrow (p \vee \sim q)$ is not a tautology. When p has truth value false and q has truth value true, the given formula is false.

05. Ans: (c)

Sol: E_1 :

L.H.S $\Leftrightarrow (P \rightarrow Q) \rightarrow Q$

$\Leftrightarrow \sim(P \rightarrow Q) \vee Q$ By E_{16}

$\Leftrightarrow (P \wedge \sim Q) \vee Q$ By E_{17}

$\Leftrightarrow (P \vee Q) \wedge (\sim Q \vee Q)$ By E_4

$\Leftrightarrow (P \vee Q)$ By E_{11}

=R.H.S

E_2 :

L.H.S $\Leftrightarrow P \rightarrow (Q \vee R)$

$\Leftrightarrow \sim P \vee (Q \vee R)$ By E_{16}

$\Leftrightarrow (\sim P \vee \sim P) \vee (Q \vee R)$ By E_6

$\Leftrightarrow (\sim P \vee Q) \vee (\sim P \vee R)$ By E_2 and E_3

$\Leftrightarrow (P \rightarrow Q) \vee (P \rightarrow R)$ By E_{16}

= R.H.S

06. Ans: (d)

Sol: If $(P \rightarrow Q)$ is false then P has truth value true and Q has truth value false.

$S_1 = \sim(P \wedge Q) \rightarrow Q$

$\Leftrightarrow \sim(T \wedge F) \rightarrow F$

$\Leftrightarrow \sim F \rightarrow F$

$\Leftrightarrow T \rightarrow F$

$\Leftrightarrow F$

$\therefore S_1$ is false

$S_2 = \sim P \vee (P \leftrightarrow Q)$

$\Leftrightarrow \sim T \vee (T \leftrightarrow F)$

$\Leftrightarrow F \vee F$

$\Leftrightarrow F$

$\therefore S_2$ is false

07. Ans: (b)

Sol: Here P = Q = True and R = S = T = False

(a) $P \rightarrow (R \rightarrow Q)$

$\Leftrightarrow$ True $\rightarrow$ (F $\rightarrow$ True)

$\Leftrightarrow$ True $\rightarrow$ True

$\Leftrightarrow$ True

(b) $(P \rightarrow S) \wedge (S \rightarrow T)$

$\Leftrightarrow$ False $\wedge$ True

$\Leftrightarrow$ False

(c) $(Q \rightarrow (R \rightarrow S)) \wedge ((P \rightarrow S) \rightarrow \sim T)$

$\Leftrightarrow$ True $\wedge$ True

$\Leftrightarrow$ True

(d) $\sim Q \rightarrow [R \rightarrow \{R \rightarrow (P \vee S)\}]$

$\Leftrightarrow$ False $\rightarrow [R \rightarrow \{R \rightarrow (P \vee S)\}]$

$\Leftrightarrow$ True

08. Ans: (d)

Sol: (a) $p \rightarrow (q \rightarrow r) \Leftrightarrow (p \leftrightarrow q) \rightarrow r$

When p is false, q is false and r is false.

we have, L.H.S is true and R.H.S is false.

$\therefore$ L.H.S $\not\Leftrightarrow$ R.H.S

(b) $(p \wedge q) \Leftrightarrow \sim(p \leftrightarrow \sim q)$

When p is false and q is false, we have L.H.S is false and R.H.S is true.

$\therefore$ L.H.S $\not\Leftrightarrow$ R.H.S

Scanned with CamScanner

(c) Let $(p \to q) \Leftrightarrow (p \to r)$

When p is true, q is true and r is false

We have L.H.S is true and R.H.S is false

$\therefore$ L.H.S $\not\Leftrightarrow$ R.H.S

(d) L.H.S $\Leftrightarrow p \wedge (q \vee p)$

$\Leftrightarrow (p \wedge q) \vee (p \wedge p)$ By E_4

$\Leftrightarrow (p \wedge q) \vee p$ By E_6

$\Leftrightarrow p \vee (p \wedge q)$ By E_2

$\Leftrightarrow p \vee (q \wedge p)$ By E_2

09. Ans: (a)

Sol: S_1: $\{(P \to Q) \wedge (R \to S) \wedge (P \vee R)\} \to (Q \vee S)$

By the rule of dilemma I_{14}, S_1 is valid

S_2: $[\{P \to (Q \vee R)\} \wedge \sim Q] \to [P \to R]$

This formula is a tautology, if the following argument is valid.

(1) $P \to (Q \vee R)$

(2) $\sim Q$

(3) P (new premise to apply conditional proof)

$\therefore$ R

Proof:

(4) $Q \vee R$ (1), (3) modus ponens

(5) R (2), (4) D.S

$\therefore S_2$ is a tautology

S_3: $[\{(P \vee Q) \to R\} \wedge \sim P] \to (Q \vee R)$

When P is false, Q is false and R is false S_3 is false.

$\therefore S_3$ is not a tautology.

10. Ans: (b)

Sol: $x * y \Leftrightarrow (\sim x \vee \sim y)$

$\Leftrightarrow \sim (x \wedge y)$ E_5

$\Leftrightarrow x \to \sim y$ E_{17}

$\Leftrightarrow y \to \sim x$ E_{18}

$x * y \not\Leftrightarrow x \to y$

11. Ans: (b)

Sol: The statement "all birds can fly" can be represented as

$\forall x \{ B(x) \to F(x) \}$

Now, the given statement can be represented by

$\sim [\forall x \{ B(x) \to F(x)\}]$

$\Leftrightarrow \exists x \{B(x) \wedge \sim F(x)\}$

12. Ans: (b)

Sol: The premises are

(1) $\forall x \{ p(x) \vee q(x)\}$

(2) $\exists x \{\sim p(x)\}$

(3) $\forall x \{ \sim q(x) \vee r(x)\}$

(4) $\forall x \{ s(x) \to \sim r(x)\}$

From (2), By the rule of existential specification (E.S), we have

(5) $\sim p(a)$

(6) $p(a) \vee q(a)$ From (1), By the rule of universal specification (U.S)

(7) q (a) (5), (6) D.S

(8) $\{\sim q(a) \vee r(a)\}$ From (3), By U.S

(9) r(a)

(10) $s(a) \to \sim r(a)$ (4), U.S

(11) $\sim s(a)$ (9), (10), M.T

(12) $\exists x \sim s(x)$ (11), existential generalization (E.S)

Scanned with CamScanner

13. Ans: (b)

Sol: The statement 'every complete bipartite graph is not planar' can be written as

$\forall x\ [\{C(x) \wedge B(x)\} \rightarrow \sim P(x)]$

Now, the negation of the above statement is

$\exists x\ [\{C(x) \wedge B(x)\} \wedge P(x)]$

14. Ans: (a)

Sol: The $R(x) \wedge F(x)$ denote x is rich and famous.

The given statement can be formalized as

$\forall x\ [\ P(x) \rightarrow \{\ R(x) \wedge F(x)\ \}]$

15. Ans: (c)

Sol: (a) The given formula is valid by conditional proof, if the following argument is valid.

(1) $\forall x\ \{\ P(x) \rightarrow Q(x)\ \}$

(2) $\forall x\ P(x)$ new premise to apply C.P

$\therefore\ \forall x\ Q(x)$

Proof:

(3) $P(a) \rightarrow Q(a)$	(1), U.S
(4) $P(a)$	(2), U.S
(5) $Q(a)$	(3),(4), M.P
(6) $\forall x\ Q(x)$	(5), U.S

$\therefore$ The given formula is valid (C.P)

(b) $\forall x\ \{\ A(x) \wedge B(x)\}$

$\Leftrightarrow \{\ \forall x\ A(x) \wedge \forall x\ B(x)\ \}$

Therefore, the given statement is valid.

(c) Let c and d are two elements in the universe of discourse, such that A(c) is true and B(d) is false.

Now, the L.H.S of the given statement is true but R.H.S is false.

$\therefore$ The given statement is not valid.

(d) $\exists x\{\ A(x) \vee B(x)\ \}$

$\Leftrightarrow [\{\exists x A(x)\ \} \vee \{\ \exists x\ B(x)\}]$

$\therefore$ The statement is valid.

16. Ans: (d)

Sol: (a) The given statement is a standard equivalence. (refer material book). We can show that L.H.S $\Rightarrow$ R.H.S and R.H.S $\Rightarrow$ L.H.S.

By using C.P or I.P

(b) The given statement is a standard equivalence (refer material book). We can show that L.H.S $\Rightarrow$ R.H.S and R.H.S $\Rightarrow$ L.H.S

By using C.P or I.P

(c) L.H.S $\Leftrightarrow \exists x\ \{\ \sim A(x) \vee B(x)\ \}$ E_{16}

$\Leftrightarrow \{\exists x \sim A(x)\} \vee \{\exists x\ B(x)\}$ E_6

$\Leftrightarrow \forall x\ A(x) \rightarrow \exists x\ B(x)$ E_{16}

$\Leftrightarrow$ R.H.S

(d) The statement is false, because converse of the statement is not true.

Let W = {a, b} be the universe of discource such that

A(a) and B(a) are true and

A(b) and B(b) are false

Now R.H.S is true but L.H.S is false.

Scanned with CamScanner

17. Ans: (d)

Sol: (a) The argument is

(1) $\forall x \{ C(x) \rightarrow P(x)\}$

(2) $\exists x \{ C(x) \wedge L(x)\}$

$\therefore \exists x \{ P(x) \wedge L(x)\}$

Proof:

(3) $C(a) \wedge L(a)$	(2), E.S
(4) $C(a)$	(3), simplification
(5) $L(a)$	(3), simplification
(6) $C(a) \rightarrow P(a)$	(1), U.S
(7) $P(a)$	(6), (4), M.P
(8) $P(a) \wedge L(a)$	(5), (7), conjunction
(9) $\exists x \{ P(x) \wedge L(x)\}$	(8) , E.G

$\therefore$ Valid

(b) The argument is

(1) $\exists x \{ P(x) \vee Q(x) \}$

(2) $\forall x \sim Q(x)$

$\therefore \exists x P(x)$

Proof:

(3) $P(a) \vee Q(a)$	(1) , E.S
(4) $\sim Q(a)$	(2), U.S
(5) $P(a)$	(3),(4), D.S
(6) $\exists x P(x)$	(5), E.G

$\therefore$ Valid.

(c) The argument is

(1) $\forall x \{ P(x) \rightarrow Q(x) \}$

(2) $\exists x \sim Q(x)$

$\therefore \exists x \sim P(x)$

Proof:

(3) $\sim Q(a)$	(2) ,E.S
(4) $P(a) \rightarrow Q(a)$	(1), U.S
(5) $\sim P(a)$	(4), (3), M.T
(6) $\exists x \sim P(x)$	(5), E.G

$\therefore$ Valid.

(d) The argument is

(1) $\forall x \{A(x) \vee B(x) \}$

(2) $\forall x \{A(x)\}$

$\therefore \exists x B(x)$

Proof:

(3) $A(a) \vee B(a)$	(1), U.S
(4) $A(a)$	(2), U.S

We can not combine (3) & (4), to get conclusion.

$\therefore$ The argument is not valid.

18. Ans: (d)

Sol: (a) The given formula is equivalent to $\exists x \forall y P(x,y) \rightarrow \forall y \exists x P(x,y)$

Which is valid (refer relation diagram in material book)

(b) The given formula can be written as $\exists x \forall y P(x,y) \rightarrow \forall y \exists x P(x,y)$

Which is valid (refer the relation diagram in material book)

(c) Valid (refer the relation diagram in material book)

(d) Not valid (refer the relationship diagram in material book)

Scanned with CamScanner

19. Ans: (c)

Sol: Argument I

(1) $\exists x\{ F(x) \wedge S(x)\} \rightarrow \forall y \{ M(y) \rightarrow W(y)\}$

(2) $\exists y \{ M(y) \wedge \sim W(y) \}$

$\therefore \forall x \{ F(x) \rightarrow \sim S(x) \}$

Proof:

If we denote the first premises by $P \rightarrow Q$ then the argument can be written as

(1) $P \rightarrow Q$

(2) $\sim Q$

$\therefore \sim P$

Which is valid, by the rule of modus tollens

Argument II

$\{\exists x\, P(x) \rightarrow \forall x\, Q(x)\}$ hypothesis

$\Leftrightarrow \{\forall x \sim P(x) \vee \forall x\, Q(x)\}$

$\Leftrightarrow \forall x \{\sim P(x) \vee Q(x)\}$

$\Leftrightarrow \forall x \{P(x) \rightarrow Q(x)\}$

$\therefore$ The argument is valid

Scanned with CamScanner

Chapter 2 Combinatorics

01. Out of 100 cups coffee, 25 are too hot, 35 are too cold, 45 are too bitter, 15 are too hot and too bitter and 5 are too cold and too bitter. How many are just right?

(a) 15 (b) 20
(c) 28 (d) 35

02. If we toss a pair of fair dice, then number of ways we get a sum of 6 or 7 is _____.

03. How many integers between 10^4 and 10^5 have no digits other than 0,2,5 and 8?

04. How many integers are there in the set {1, 2, 3,.....,1000} with at least one digit being repeated?

05. 'A' has 5 different books and 'B' has 3 different books. Then the number of ways in which they can exchange their books so that each keeps their individual number of books is _____

(a) 55 (b) 56
(c) 50 (d) 60

06. How many ways 5 boys and 5 girls can sit in a row so that no two boys are side by side?

07. How many ways 5 boys and 5 girls can sit around a circle so that boys and girls should sit alternately?

08. How many ways 6 children can be admitted in 10 different schools?

09. How many ways we can distribute 10 similar books among 15 persons, so that no person can take more than one book?

10. A box contains two white balls, three black balls and four red balls. In how many ways can three balls be drawn from the box, if atleast one black ball is to be included in the draw

(a) 48 (b) 64
(c) 72 (d) 96

11. How many ways we can distribute 10 similar books among 5 persons?

12. Number of non- negative integer solutions possible to the equation

$x_1 + x_2 + x_3 + x_4 + x_5 = 25$

where $x_1 \geq 2$, $x_2 \geq 3$, $x_3 \geq 4$ and

$x_4 \geq 6$ is_____.

13. What is the minimum number of persons we have to choose randomly to ensure that at least 10 persons were born in the same month?

Scanned with CamScanner

14. A bag contains 6 Red balls, 8 Blue balls, 10 green balls, 15 White balls, 20 Yellow balls. What is the minimum no. of balls we have to choose randomly from the bag to ensure that we get at least 6 balls of same color.

15. 10 Points are randomly selected in a square with each side 3 units. There will be at least 2 points (of those 10 points) such that the distance between the two points cannot exceed _____.

(a) 1 (b) $\sqrt{2}$

(c) $\sqrt{2-1}$ (d) $2-\sqrt{2}$

16. Number of + ve integers which are less than 180 and co- prime to 180 is ____.

17. Number of +ve integers which are less than 113 and co-prime to 113 is ____.

18. How many ways we can put 5 letters L_1, L_2, L_3, L_4, L_5 in 5 envelopes e_1, e_2, e_3, e_4, and e_5 (@ 1 letter per envelope) so that

(i) no letter is correctly placed?

(ii) at least 1 letter is correctly placed?

(iii) exactly 2 letters are correctly placed?

(iv) at most 1 letter is correctly placed?

(v) at least 1 letter is wrongly placed?

(vi) exactly 1 letter is wrongly placed?

19. A computer system considers a string of decimal digits as a valid codeword if it contains an even number of 0 digits. Let a_n = number of valid n-digit codewords. The recurrence relation for a_n is _____.

20. If a_n = number of ternary sequences of length n with no two consecutive zeros, then recurrence relation for a_n is _____.

21. The solution of recurrence relation $a_n = a_{n-1} + (2n + 1)$ where $a_0 = 1$ is ____.

22. The solution of the recurrence relation $T(2^k) = 2.T(2^{k-1}) + 1$ where $T(1) = 1$ is ____.

23. The solution of recurrence relation is $a_n - 5a_{n-1} + 6a_{n-2} = 0$ where $a_0 = 2$ and $a_1 = 5$ is ____.

24. The solution of $a_n - 2a_{n-1} + a_{n-2} = (3n+5)$ is _____.

25. The generating function of the sequence With general term $n(3 + 5n)$ is _____.

26. Find the coefficients of x^{27} in $(x^4+x^5+x^6+\ldots)^5$ is

27. For $0 < |x| < 1$, $\sum_{k=0}^{\infty} k^2 x^k =$

Scanned with CamScanner

Solutions

01. Ans: (a)

Sol: Number of coffee cups with atleast one defect

$= n(H \cup B \cup C)$

$= n(H)+n(B)+n(C) - n(H \cap B) - n(B \cap C) - n(H \cap C) + n(H \cap B \cap C)$

$= 25 + 35 + 45 - 15 - 5 - 0 + 0$

$= 85$

$\therefore$ Number of coffee cups which are just right $= 100 - 85 = 15$

02. Ans: 11

Sol: Number of ways we get 6 = 5

$\{(1,5),(2,4),(3,3),(4,2),(5,1)\}$

Number of ways we get 7 = 6

$\{(1,6),(2,5),(3,4),(4,3),(5,2),(6,1)\}$

Required number of ways $= 5 + 6 = 11$

03. Ans: 768

Sol: An integer between 10^4 and 10^5 is a 5-digit integer. The first digit cannot be zero.

The first digit we can choose in 3 ways and each of the remaining digits we can choose in 4 ways.

By product rule,

Required number of integers $= 3.(4^4) = 768$

04. Ans: 262

Sol: Number of integers in the given set with no digit being repeated = 738

$(9(9)(8)+9(9)+9)$

Required number of integers $= 1000 - 738$

$= 262$

05. Ans: (d)

Sol: Required number of ways = Number of ways B can map his books with 3 books of A $= P(5,3) = (5)(4)(3) = 60$

06. Ans: 86400

Sol: First, 5 girls can sit in a row in $\angle 5$ ways.

Now, there are 6 positions among the girls for the 5 boys to sit.

Therefore, boys can sit in P(6,5) ways.

By product rule,

Required number of ways $= \angle 5\ P(6,5)$

$= (120)(720)$

$= 86{,}400$

07. Ans: 2880

Sol: First girls can sit around a circle in $\angle 4$ ways.

Now there are 5 distinct places among the girls, for 5 boys to sit.

Therefore, the boys can sit in $\angle 5$ ways.

By product rule,

Required number of ways $= \angle 4 \,.\, \angle 5$

$= 2880$

08. Ans: 10^6

Sol: Each child can be admitted in 10 ways.

By product rule,

Required number of ways $= 10^6$

Scanned with CamScanner

09. Ans: C(15,5)

Sol: We can select 10 persons in C(15,10) ways. Then, we can distribute 10 similar books among the 10 persons in only one way.

Required number of ways = C(15,10).1

= C(15,5) = 3003

10. Ans: (b)

Sol: Number of ways we can draw 3 balls

= C(9,3) = 84

Number of ways we can draw 3 balls so that no black ball is included = C(6,3) = 20

Required number of ways = 84 –20 = 64

11. Ans: 1001

Sol: Required number of ways = V(5,10)

V(n,k) = C(n–1+k, k)

⇒ V(5,10) = C(14,10)

= C(14,4)

= 1001

12. Ans: 1001

Sol: The problem is similar to distributing 25 similar balls in 5 numbered boxes, so that first box contains atleast 2 balls, second box contains atleast 3, third box contains atleast 4 and fourth box contains atleast 6.

After distributing the balls, we are left with 10 balls to distribute among the 5 boxes.

Required number of solutions =V(5,10)

C(14,10) = C(14,4) = 1001

13. Ans: 109

Sol: If we have n pigeon holes, then minimum number of pigeons required to ensure that atleast (k+1) pigeons belong to same pigeonhole = kn + 1

For the present example, n =12 and k+1= 10

Required number of persons = kn + 1

= 9(12) +1

= 109

14. Ans: 26

Sol: By Pigeonhole principle,

Required number of balls = kn + 1

= 5(5) + 1

= 26

15. Ans: (b)

Sol: Divide the square into 9 equal parts as shown below,

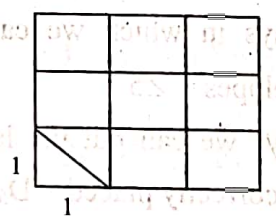

By pigeonhole principle,

Atleast two points lie in one of the small squares.

The distance between any two points in a small square cannot exceed the length of the diagonal which is $\sqrt{2}$.

Scanned with CamScanner

16. Ans: 48

Sol: The distinct positive divisors of 180 are 2,3 and 5.

Number of positive integers which are less than 180 and coprime to 180.

$$= 180\left\{\frac{(2-1)(3-1)(5-1)}{2.3.5}\right\} = 48$$

17. Ans: 112

Sol: 113 is a prime number

Required number of positive integers

$$= \phi(113) = 112$$

18. Ans: i(44), ii(76), iii(20), iv(89), v(119), vi(0)

Sol:

(i) Number of ways we can put 5 letters, so that no letter is correctly placed

$$= D_5 = \angle 5\left(\frac{1}{\angle 2} - \frac{1}{\angle 3} + \frac{1}{\angle 4} - \frac{1}{\angle 5}\right)$$

$$= 44$$

(ii) Number of ways in which we can put 5 letters in 5 envelopes $= \angle 5$

Number of ways we can put the letters so that no letter is correctly placed $= D_5$

Required number of ways $= \angle 5 - D_5$

$$= 120 - 44 = 76$$

(iii) Number of ways we can put the 2 letters correctly $= C(5,2) = 10$

The remaining 3 letters can be wrongly placed in D_3 ways.

Required number of ways $= C(5,2)\, D_3$

$$= (10)\, 2 = 20$$

(iv) Number of ways in which no letter is correctly placed $= D_5$

Number of ways in which exactly one letter is correctly placed $= C(5,1)\, D_4$

Required number of ways $= D_5 + C(5,1) D_4$

$$= 44 + 5\,(9) = 89$$

(v) There is only one way in which we can put all 5 letters in correct envelopes.

Required number of ways $= \angle 5 - 1 = 119$

(vi) It is not possible to put only one letter in wrong envelope.

Required number of ways $= 0$

19. Ans: $a_n = 8a_{n-1} + 10^{n-1}$

Sol: Case (i): If the first digit is not 0, then number of valid codewords are $9a_{n-1}$.

Case(ii). If the first digit is 0, then number of valid codewords are $(9^{n-1} - a_{n-1})$

By sum rule,

The recurrence relation is

$$a_n = 9a_{n-1} + (9^{n-1} - a_{n-1}) = 8.a_{n-1} + 9^{n-1}$$

20. Ans: $a_n = 2a_{n-1} + 2a_{n-2}$

Sol: Case(i): If the first digit is not 0, then number of ternary sequences possible with no consecutive zeros $= 2a_{n-1}$

Case (ii): If the first digit is 0, then second digit we can choose in 2 ways and the remaining digits we can choose in a_{n-2} ways.

The recurrence relation is

$$a_n = 2a_{n-1} + 2a_{n-2}$$

Scanned with CamScanner

21. Ans: $a_n = (n+1)^2$

Sol: $a_1 = a_0 + 3 = 1 + 3 = 2^2$

$a_2 = a_1 + 5 = 1 + 3 + 5 = 3^2$

$a_3 = a_2 + 7 = 1 + 3 + 5 + 7 = 4^2$

.....

$a_n = (n+1)^2$

22. Ans: $T(2^k) = 2^{k+1} - 1$

Sol: $T(2^k) = 2.T(2^{k-1}) + 1$

Where, $T(1) = 1$

Let $a_k = T(2^k)$

The given equation becomes

$a_k = 2a_{k-1} + 1$

The solution is $a_k = T(2^k)$

$= C_1(2^k) - 1$ ..... (1)

$T(1) = 1 \Rightarrow 1 = C_1 - 1$

$\Rightarrow C_1 = 2$

Substituting C_1 value in (1), we get

$T(2^k) = 2^{k+1} - 1$

23. Ans: $a_n = 3^n + 2^n$

Sol: $a_n - 5a_{n-1} + 6a_{n-2} = 0$

Where, $a_0 = 2$ and $a_1 = 5$

The characteristic equation is

$t^2 - 5t + 6 = 0$

$t = 3, 2$

The solution is $a_n = C_1 3^n + C_2 2^n$ ..... (1)

$n = 0 \Rightarrow 2 = C_1 + C_2$

$n = 1 \Rightarrow 5 = 3C_1 + 2C_2$

$\Rightarrow C_1 = 1$ and $C_2 = 1$

substituting the values of C_1 and C_2 in (1)

we get $a_n = 3^n + 2^n$

24. Ans: $a_n = c_1 + c_2.n + 4n^2 + n^3/2$

Sol: $a_n - 2a_{n-1} + a_{n-2} = 3n + 5$ ..... (1)

The C.E is $t^2 - 2t + 1 = 0$

$\Rightarrow t = 1, 1$

$C.F = (C_1 + C_2 n)$

$P.S = (cn+d)n^2$ where c and d are undetermined coefficients substituting in (1)

$(cn^3 + dn^2) - 2\{c(n-1)^3 + d(n-1)^2\} + \{c(n-2)^3 + d(n-2)^2\} = 3n + 5$

$n = 1 \Rightarrow d = 4$

$n = 2 \Rightarrow 3c + 2d = 11$

$\Rightarrow c = \frac{1}{2}$

$P.S = \frac{n^3}{2} + 4n^2$

The solution is $a_n = C_1 + C_2 n + \frac{n^3}{2} + 4n^2$

25. Ans: $\frac{8x + 2x^2}{(1-x)^3}$

Sol: $f(x) = \sum n(3 + 5n)x^n$

$= 3\sum nx^n + 5\sum n^2 x^n$

$= 3\frac{x}{(1-x)^2} + 5\left\{\frac{x^2 + x}{(1-x)^3}\right\}$

26. Ans: C(11,4)

Sol: $(x^4 + x^5 + x^6 + \ldots \infty)^5$

$= x^{20}(1 + x + x^2 + \ldots \infty)^5$

$= x^{20}[(1-x)^{-1}]^5$

$= x^{20}(1-x)^{-5}$

$= x^{20}\sum c(n+4, n)x^n$

Coefficient of $x^{27} = C(11,7)$

$= C(11,4)$

Scanned with CamScanner

27. Ans: $\frac{x(1+x)}{(1-x)^3}$

Sol: $\sum k^2x^k = \frac{x^2+x}{(1-x)^3}$

$$= \sum_{n=0}^{\infty} n^2x^n$$

Scanned with CamScanner

Chapter 3 Graph Theory

01. Let 'G' be simple graph with 10 vertices and 12 edges. The number of edges in the graph $\overline{G}$ _____.

02. Let G be a simple graph with 18 vertices, 3 vertices with degree 4 and remaining vertices with degree 2. Number of edges in G is _____

03. Maximum number of vertices possible in a simple graph with 25 edges and degree of each vertex at least 3 is ____.

04. Minimum number of vertices necessary in a simple graph with 17 edges and degree of each vertex is at most 5 is _____.

05. Let G be a simple non planar graph with 5 vertices.
G has ___.
(a) 9 edges (b) 10 edges
(c) 8 edges (d) 7 edges

06. The chromatic number of a tree T with n vertices ($n \geq 2$) is ____.

07. If G is a cyclic graph with n vertices ($n \geq 3$) and G has no cycles of odd length then $\chi(G) =$ ____.

08. Chromatic number of a star graph with n vertices ($n \geq 2$) is ____.

09. Number of perfect matching in k_2 is ___.

10. Number of perfect matching in $K_{4,4} =$ ____

11. Number of perfect matching in C_n ($n \geq 4$) and (n is even) is___

12. Number of perfect matching in W_n ($n \geq 4$ and n is even) is ____.

13. Let G be a connected graph with 7 vertices, no cycles of odd length and maximum number of edges. Circuit rank of the graph is_____.

14. For the complete graph K_n, find vertex connectivity and edge connectivity?

15. Minimum number of edges necessary in a simple graph with 10 vertices to ensure connectivity is _____.

16. Let G be a simple graph with 20 vertices and 8 components. If we delete a vertex in G, then number of components in G should lie between _____.
(a) 8 and 20 (b) 8 and 19
(c) 7 and 19 (d) 7 and 20

Scanned with CamScanner

Solutions

01. Ans: 33

Sol: For any simple graph,

$$|E(G)|+|E(\overline{G})|=\frac{n(n-1)}{2}$$

Where, $n = |V(G)|$

$$\Rightarrow 12 + |E(\overline{G})| = \frac{10(9)}{2}$$

$$\Rightarrow \quad |E(\overline{G})| = 33$$

02. Ans: 21

Sol: By sum of degree of vertices theorem

$$\sum \deg|v_i| = 2|E|$$

$$\Rightarrow 3(4) + 15(2) = 2|E|$$

$$\Rightarrow \quad |E| = 21$$

03. Ans: 16

Sol: By sum of degrees of vertices theorem, if degree of each region is at least k, then

$$k|V| \le 2|E|$$

$$\Rightarrow 3|V| \le 2(25)$$

$$\Rightarrow |V| \le 16.66$$

$$\Rightarrow |V| \le 16$$

$\therefore$ Maximum number of vertices possible $= 16$

04. Ans: 7

Sol: By sum of degrees of vertices theorem, if degree of each vertex is at most k, then

$$k|V| \ge 2|E|$$

$$\Rightarrow 5|V| \ge 2(17)$$

$$\Rightarrow |V| \ge 6.8$$

$\therefore$ Minimum number of vertices necessary $= 7$

05. Ans : (b)

Sol: The simple non planar graph with 5 vertices is K_5.

K_5 has 10 edges.

06. Ans 2

Sol: Every tree can be represented as a bipartite graph.

$\therefore$ Chromatic number of $T = 2$.

07. Ans : 2

Sol: If a graph G has no cycles of odd length, then G is a bipartite graph.

$\therefore$ Chromatic number of $G = \chi(G) = 2$

08.

Sol: $$\chi(W_n) = \begin{cases} 4, \text{ if n is even} \\ 3, \text{ if n is odd} \end{cases}$$

$$\therefore \chi(W_n) = n - 2\left\lceil \frac{n}{2} \right\rceil + 4$$

09. Ans: 105

Sol: Number of perfect matching in K_{2n}

$$= (2n-1)(2n-3)(2n-5) \ldots 5 \cdot 3 \cdot 1$$

Scanned with CamScanner

Number of perfect matching in $K_8 = 7 \cdot 5 \cdot 3 \cdot 1 = 105$

10. Ans: 24

Sol: Number of perfect matching in $K_{n,n} = \angle n$

$\Rightarrow$ Number of perfect matching in $K_{4,4} = \angle 4$

$= 24$

11. Ans: 2

Sol: Consider the cycle graph C_6 shown below,

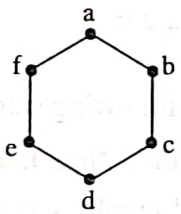

The two perfect matchings of C_6 are {a–b, c–d, e-f} and { a-f, e-d, c-b} we can generalize that number of perfect matchings in C_{2n} is 2.

12.

Sol: In wheel graph W_n, the degree of hub is $n-1$. We can match the hub of W_n in $(n-1)$ ways.

$\therefore$ Number of perfect matchings $W_n = n-1$

13. Ans: 6

Sol: If G has no cycles of odd length, then G is a bipartite graph.

Maximum number of edges possible= $\left\lfloor \frac{n^2}{4} \right\rfloor$

Where $n = 7$

$\therefore$ Circuit rank of G = $|E| - |V| + 1$

$= 12 - 7 + 1 = 6$

14.

Sol: By deleting any number of vertices in K_n we cannot disconnect G.

However, by deleting (n-1) vertices we can reduce K_n into a trivial graph.

$\therefore k(K_n) = n-1$

We have, $k(K_n) \le \lambda(K_n) \le \delta(K_n)$

$= n-1 \ldots. (1)$

$\Rightarrow \lambda(K_n) = n-1$

15. Ans: 37

Sol: Minimum number of edges necessary to ensure connectivity in a simple graph with n vertices $= \frac{(n-1)(n-2)}{2} + 1$ (Where $n = 10$)

$= \frac{9.8}{2} + 1 = 37$

16. Ans: (c)

Sol: **Case (i):** If the vertex we are deleting from G is an isolated vertex, which is a component by itself, then number of component G become 7.

Case (ii): If G is a star graph, then by deleting the cut vertex of G, we get 19 components

$\therefore$ Number of components in G should lie between 7 and 19.

Scanned with CamScanner

Chapter 4 Set Theory

01. Which of the following is false?

(a) $A-(A-B)=A\cap B$

(b) $(A\cup B)\cap C=A\cup(B\cap C)$

(c) $B-A=B\cap A^C$

(d) $(A\cap B)\subset A\subset(A\cup B)$

02. Consider the following arguments where $H_1, H_2, H_3, \ldots$ are hypothesis and C is conclusion.

(I) H_1 : All my friends are musicians

H_2 : John is my friend

H_3: None of my neighbors are musicians

C : John is not my neighbor.

(II) H_1 : All gold jewellary is expensive

H_2 : No ear rings are expensive

C : Ear rings are not made of gold.

Which of the following is true?

(a) Arg.I is valid and Arg. II is not valid

(b) Arg.I is not valid and Arg. II is valid

(c) Both arguments are valid

(d) Both Arguments are invalid

03. Let A and B be any two sets. The symmetric difference of A and B is defined by $A\oplus B=(A-B)\cup(B-A)$. Which of the following is false?

(a) $A\oplus B=B\oplus A$

(b) $A+\varnothing=A$

(c) $A\oplus A=\varnothing$

(d) $A\oplus B=(A\cap\sim B)\cap(B\cap\sim A)$

04. Consider the statement

S_1: $(A-B)-C=(A-C)-(B-C)$

S_2: $(A\cap B)\cup C=A\cap(B\cup C)$ iff $C\subseteq A$

Which of the following is true?

(a) S_1 is true and S_2 is false

(b) S_1 is false and S_2 is true

(c) S_1 and S_2 are false

(d) S_1 and S_2 are true

05. Which of the following statements is false?

(a) The relation $\leq$ 'less than or equal to' on a set of real numbers is reflexive, transitive and Anti-symmetric

(b) The relation 'perpendicular to' on the set of lines in a plane is reflexive and symmetric

(c) The relation $\subseteq$ (set inclusion) on a collection of sets is a partial ordering relation.

(d) The relation 'divides' (a/b) on a set of natural numbers is a partial order.

06. How many symmetric relations are there on a set with n elements?

(a) 2^n (b) $2^{n(n-1)/2}$

(c) $2^{n(n+1)/2}$ (d) $2^{n(n-1)}$

07. How many antisymmetric relations are there on a set with n elements?

(a) $2^n.3^{n(n-1)/2}$ (b) 2^n

(c) n^2 (d) n

Scanned with CamScanner

08. Which of the following statements is **false**?

(a) If R and S are reflexive relation then $R \cap S$ is reflexive

(b) If R and S are symmetric then $R \cap S$ is also symmetric, and $R \cup S$ is symmetric

(c) If R and S are transitive relations on a set A, then $R \cap S$ is also transitive.

(d) If R is reflexive relation on a set A, then $R \cup S$ is reflexive for any relation S on A.

(e) If R and S are transitive relations then $R \cup S$ is also transitive.

09. Which of the following is **not** a partial ordering relation?

(a) The relation $\subseteq$ (Set Inclusion) on any collection of sets.

(b) The relation $\leq$ (less than or equal to) on the set of all Real numbers.

(c) The relation 'divides' (a / b) on the set of all positive integers.

(d) The relation 'divides' on the set of all integers.

(e) The relation R defined over set of all integers as $(a \overset{R}{\ } b) \Leftrightarrow (b = a^r)$ for some positive integer 'r'.

10. Find the transitive closure of the following relation R on A = {a, b, c, d}

R = {(a, d), (b, a), (b, c), (c, a), (c, d), (d, c) }

(a) $R \cup R^{-1}$

(b) A x A

(c) $R \cup \Delta_A$

(d) (Ax A) – {(a, b), (b, b), (c, b), (d, c)}

11. Consider the equivalence relation

R = { (x, y)| x – y is an integer}

Which of the following is equivalence class of 1?

(a) Set of all positive integers

(b) Set of all integers

(c) Set of all negative integers

(d) Set of all non zero integers

12. Let R be the relation on the set of integers defined by "x - y is divisible by 5". How many equivalence classes are there on A w.r.t. R?

(a) 5 (b) 32

(c) 25 (d) unlimited

13. Which of the following is **not true**?

(a) The poset [N, |] is a lattice.

(b) The poset [P(S) ; $\subseteq$] is a lattice where S is a finite set.

(c) The poset [D_n ; |] is a lattice where n is a +ve integer.

(d) [Z, |] is a lattice.

14. Which of the following is **not** a distributive Lattice?

(a) [D_8; |]

(b) [D_{12} ; |]

(c) [{1, 2, 3, 5, 30}, |]

(d) [P(A), $\subseteq$] where A ={a, b, c}

Scanned with CamScanner

15. For the Lattice $[D_{12}; |]$, which of the following is **not true** ?
(a) Complement of 1 is 12
(b) Complement of 3 is 4
(c) Complement of 2 is 6
(d) Complement of 2 and 6 does not exist

16. Let $A = \{x \mid x \neq ½ \text{ and } x \in R\}$ and define $f: A \to R$ by $f(x) = 4x/(2x-1)$. Which of the following is **true**?
(a) f is a bijection
(b) f is one-to-one but not on-to
(c) f is on-to but not 1-1
(d) f is neither one-to-one nor on-to

17. If $f(x)=1/(1-x)$ then which of the following is **false** ?
(a) fofof is an identity function on its domain
(b) fofof is an bijection on its domain
(c) fofof is an one-to-one function
(d) fofof is a constant function

18. The range of the function $f(x) = x^2/(x^4+1)$ is
(a) (0, 1/2)
(b) [0, 1/2]
(c) [0, 2]
(d) (0, 2)

19. The domain of the function
$f(x) = \sin\log\left\{\sqrt{4-x^2}/(1-x)\right\}$
(a) (–2, 1) (b) (1, 2)
(c) (–2, 2) (d) (–1, 2)

20. Which of the following functions have inverse defined on their ranges?
(a) $f(x) = x^2, x \in R$
(b) $f(x) = x^3, x \in R$
(c) $f(x) = \sin x, 0<x<2\pi$
(d) $f(x) = e^x, x \in R$

21. How many on-to functions are there from a set with 7 elements to a set with 2 elements?
(a) 126 (b) 128
(c) 42 (d) 49

22. Which of the following is **true**?
(a) Set of all real numbers is a group with respect to multiplication
(b) Set of all rational numbers is a group with respect to multiplication
(c) Set of all integers is a group with respect to addition
(d) Set of all natural numbers in a group with respect to addition

23. Which of the following is **false**?
(a) The set of all bijective functions on a finite set forms a group under function composition
(b) The set $\{1, 2, \ldots, p-1\}$ forms a group under multiplication modulo 'p' where p is a prime number
(c) The set of all strings over a finite alphabet forms a group under concatenation.
(d) In a group, the identity element is unique.

Scanned with CamScanner

24. If A is set of all non singular matrices of order 'n' and * is matrix multiplication operation then which of the following is **false**?
(a) (A,*) is a monoid
(b) (A,*) is a group
(c) (A,*) is an abelian group
(d) (A,*) is a semi group

25. The set G={1,2,3,4,5,6} is a group with respect to multiplication modulo 7. Which of the following is **false**?
(a) the inverse of 2 is 5
(b) the inverse of 4 is 2
(c) the inverse of 3 is 5
(d) the inverse of 6 is 6

26. Which of following is a group?
(a) The set {1, 2, 3, 4, 5} is a group under addition modulo 6.
(b) The set {1, 2, 3, 4, 5} is a group under multiplication modulo 6.
(c) The set {1, 2, 3, 4, 5, 6} is a group under addition modulo 7.
(d) The set {1, 2, 3, 4, 5, 6} is a group under multiplication modulo 7

27. Which of the following is **false**?
(a) the union of two sub groups is a sub group $\Leftrightarrow$ one sub group is contained in the other
(b) an abelian group can have a non abelian sub group
(c) a non abelian group can have an abelian sub group
(d) a non abelian group can have a non abelian sub group

Scanned with CamScanner

Solutions

01. Ans: (b)

Sol: Consider the venn diagram

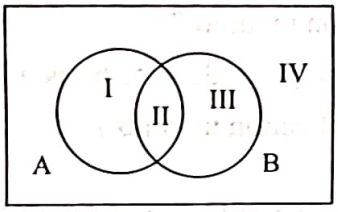

(a) $A-(A-B) = \{I,II\}-\{I\}$ (Venn diagram)
$= \{II\} = A \cap B$

(b) The statement is false. The statement is true iff $A \subseteq C$ (Modular law)

(c) $B - A = \{III\}$ venn diagram
$B \cap A^c = \{II, III\} \cap \{III, IV\} = \{III\}$
$\therefore$ L.H.S = R.H.S

(d) The statement is true
(see venn diagram)

02. Ans: (c)

Sol: (I) The premises can be represented by the following venn diagram

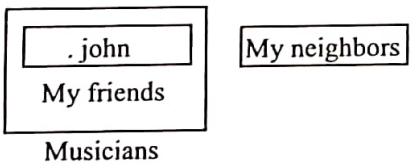

The conclusion follows from the venn diagram

(II) The premises can be represented by the following venn diagram.

The conclusion follows from the above venn diagram

03. Ans: (d)

Sol: $A \oplus B = (A \cap B^c) \cup (A^c \cap B)$
$\neq (A \cap B^c) \cap (A^c \cap B)$

$\therefore$ Option (d) is false

04. Ans: (a)

Sol: Consider the venn diagram. There are seven regions 1, 2, 3, 4, 5, 6, 7.

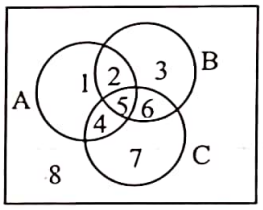

S_1: $(A - B) - C = \{1,4\} - \{4,5,6,7\}$
$= \{1\}$

$(A - C) - (B - C) = \{1, 2\} - \{2,3\}$
$= \{1\}$

$\therefore (A - B) - C = (A - C) - (B - C)$

05. Ans: (b)

Sol: A line cannot be perpendicular to itself. The relation (b) is not reflexive.

Scanned with CamScanner

06. Ans: (c)

Sol: Any subset of diagonal pairs is a symmetric relation.

In a symmetric relation each diagonal pair can appear in 2 ways.

In a symmetric relation each non diagonal combination {(a,b),(b,a)} can appear in 2 ways.

By product rule,

Number of symmetric relations possible on $A = 2^n.2^{\frac{n(n-1)}{2}} = 2^{\frac{n(n+1)}{2}}$

07. Ans: (a)

Sol: Any subset of diagonal pairs is an anti-symmetric relation.

In a anti-symmetric relation each diagonal pair can appear in 2 ways.

In anti-symmetric relation each non diagonal combination {(a,b),(b,a)} can appear in 3 ways.

By product rule,

Number of anti-symmetric relations possible on $A = 2^n.3^{\frac{n(n-1)}{2}}$.

08. Ans: (e)

Sol: Let A = {a,b,c}

R = {(a,b),(b,b)}

and S = {(b,c),(c,c)}

Now, $R \cup S$ = { (a,b),(b,c),(b,b),(c,c)}

Here R is transitive and S is transitive.

But $(R \cup S)$ is not transitive.

$\therefore$ Option (e) is false.

09. Ans: (d)

Sol: 0 is not a divisor of 0.

$\therefore$ The relation 'divides' is not reflexive on set of all integers.

Hence, the relation 'divides' is not a partial order on A.

10. Ans: (d)

Sol: The given relation can be represented by the following diagraph

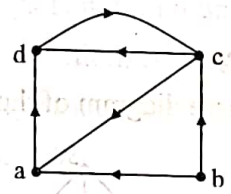

From vertex a, there are paths to vertices a,c and d .

From vertex b, there are paths to vertices a,c and d.

From vertex c, there are paths to the vertices a,c and d.

From vertex d, there are paths to the vertices a,c and d.

$\therefore R^* = \{(a,a),(a,c),(a,d),(b,a),(b,c),(b,d),$
$(c,a),(c,c),(c,d),(d,a),(d,c),(d,d)\}$
$= (A \times A) - \{(a,b), (b,b),(c,b),(d,c)\}$

11. Ans: (b)

Sol: $[x] = \{ y \mid (x-y) \text{ is an integer}\}$

$[1] = \{y \mid (1-y) \text{ is an integer}\}$

= set of all integers

Scanned with CamScanner

12. Ans: (a)

Sol: If we divide any integer with 5 then the possible remainders are 0,1,2,3,4

$\therefore$ Number of equivalence classes possible $= 5$.

13. Ans: (d)

Sol: Z = set of all integers. (The relations is neither reflexive nor anti-symmetric)

[Z : |] is not a poset and therefore not a lattice.

14. Ans: (c)

Sol: The Hasse diagram of the poset is

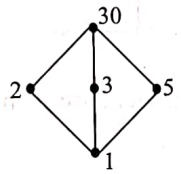

This is isomorphic to L_1^*. Therefore, the given lattice is not a distributive lattice.

15. Ans: (c)

Sol: The lub of 2 and $6 = 6 \neq I$

$\therefore$ Complement of 2 is not 6.

Note that complement of 2 does not exist.

16. Ans: (a)

Sol: Let f(a) = f(b)

$$\Rightarrow \frac{4a}{2a-1} = \frac{4b}{2b-1}$$

$$\Rightarrow 8ab - 4a = 8ab - 4b$$

$$\Rightarrow a = b$$

$\therefore$ f is 1 – 1.

Let $f(x) = \dfrac{4x}{2x-1} = y$

$$\Rightarrow 4x = 2xy - y$$

$$\Rightarrow 2x(2-y) = -y$$

$$\Rightarrow x = \frac{y}{4-2y} \in A$$

$\therefore$ For each $y \in B$ there is an element $x \in A$ such that $f(x) = y$

$\therefore$ f is on-to

Hence, f is a bijection.

17. Ans: (d)

Sol: $(fofof)x = f[f\{f(x)\}]$

$$= f\left\{f\left(\frac{1}{1-x}\right)\right\} = f\left\{\frac{1}{1-\frac{1}{1-x}}\right\}$$

$$= f\left(\frac{x-1}{x}\right) = \frac{1}{1-\left(\frac{x-1}{x}\right)} = x$$

$\Rightarrow$ (fofof) = I (Identity function)

Every identity function is 1 – 1 and also a bijection.

18. Ans: (b)

Sol: $f(x) = \left(\dfrac{x^2}{x^4+1}\right) \geq 0$

We have $(x^2-1)^2 \geq 0$

$$\Rightarrow (x^4+1-2x^2) \geq 0$$

$$\Rightarrow (x^4+1) \geq 2x^2$$

$$\Rightarrow \left(\frac{x^4+1}{x^2}\right) \geq 2$$

$$\Rightarrow \frac{x^2}{x^4+1} \leq \frac{1}{2}$$

$\therefore$ Range of $f(x) = \left[0, \dfrac{1}{2}\right]$

Scanned with CamScanner

19. Ans: (a)

Sol: f(x) is defined if $(4-x^2) > 0$ and $(1-x) > 0$

$\Rightarrow x^2 < 4$ and $x < 1$

$\Rightarrow -2 < x < 2$ and $x < 1$

$\Rightarrow -2 < x < 1$

$\therefore$ Domain of $f(x) = (-2, 1)$

20. Ans: (b) & (d)

Sol: (a) $f(x) = x^2$ is not 1–1

$\therefore f^{-1}$ is not defined

(b) $f(x) = x^3$ is a bijection

$f^{-1}(x) = x^{1/3}$

(c) $f(x) = \sin x$ is not 1–1

For ex, $f\left(\frac{\pi}{4}\right) = f\left(\frac{3\pi}{4}\right) = \frac{1}{\sqrt{2}}$

(d) $f(x) = 2^x$

$f^{-1}(x) = \log_2 x$

which is defined on the range of f(x)

21. Ans: (a)

Sol: Required number of onto functions

$= 2^7 - C(2,1).1^7$

$= 126$

22. Ans: (c)

Sol: (a) set of all real numbers is not a group with respect to multiplication, because the inverse of the real number 0 does not exist.

(b) set of all rational numbers is not a group with respect to multiplication, because the inverse of the rational number 0 does not exist.

(c) + is closed operation on Z (set of all integers) + is associative on Z. 0 is identity element in Z with respect to + inverse of $a = -a \ \forall \ a \in Z$

$\therefore$ (Z, +) is a group.

(d) Set of all natural numbers N is not a group with respect to +, because the identity element $0 \notin N$.

23. Ans: (c)

Sol: Set of all strings is not a group with respect to string concatenation, because the inverse of a non empty string does not exist, under concatenation.

24. Ans: (c)

Sol: Product of any two non-singular matrices is also a non singular matrix. Therefore, matrix multiplication is a closed operation.

Matrix multiplication is associative.

The identity matrix. In is the identity element.

The inverse of a non singular matrix exists in A.

$\therefore$ A is a group with respect to matrix multiplication.

Matrix multiplication is not commutative.

Option(c) is false.

25. Ans: (a)

Sol: $2 \otimes_7 5 = 3 \neq \rho$

$\Rightarrow$ Inverse of 2 is not 5.

Scanned with CamScanner

26. Ans: (d)

Sol: $G = \{1, 2, 3, 4, 5, 6\}$

G is closed with respect to multiplication modulo 7.

$\otimes_7$ is associative on G

1 is identity element of G with respect to $\otimes_7$.

Inverse elements of 1,2,3,4,5,6 are 1,4,5,2,3,6 respectively.

$\therefore$ G is a group with respect to $\otimes_7$

27. Ans: (b)

Sol: Let (G, *) be an abelian group and H is a subgroup of G.

Let $a,b \in H$

$\Rightarrow a,b \in G$ $\quad (\because H \subseteq G)$

$\Rightarrow a * b = b * a$ $\quad (\because$ G is abelian)

$\Rightarrow$ (H, *) is abelian group.

Scanned with CamScanner

Chapter 5 Linear Algebra

01. A system of m homogeneous linear equations AX = 0 in n–unknowns has only trivial solution if

(a) $m = n$ (b) $m \neq n$

(c) $\rho(A) = m$ (d) $\rho(A) = n$

02. The equations $\left.\begin{array}{l} x+y+z=3 \\ x+2y+3z=4 \\ 2x+3y+4z=7 \end{array}\right\}$ have the solution.

(a) $x = 2, y = 1, z = 1$

(b) $x = 1, y = 2, z = 1$

(c) $x = 3, y = -1, z = 1$

(d) $x = 1, y = 0, z = 3$

03. The number of linearly independent solutions of the equations AX = 0 is____.

(a) Rank of A

(b) No. of variables

(c) No. of variables – Rank of A

(d) No. of variables + Rank of A

04. The eigen values of Hermitian matrix are:

(a) All real

(b) All imaginary

(c) Some real and some imaginary

(d) None

05. If eigen value of matrix A is λ, then eigen value of $P^{-1}AP$ is _____.

(a) 1 (b) λ

(c) $\frac{1}{\lambda}$ (d) ∞

06. At least one eigen value of every singular matrix is equal to ____.

(a) 1 (b) –1

(c) 0 (d) ∞

07. Let $A = \begin{bmatrix} 1 & 1 & 2 \\ 2 & 2 & 1 \\ 2 & 1 & 2 \end{bmatrix}$. Then trace of A^3 is ___

(a) 101 (b) 100

(c) 99 (d) 98

08. If A is a 3 × 3 non–singular matrix then $\det(A^{-1}\,\text{adj}A) =$

(a) det A (b) 1

(c) $(\det A)^2$ (d) $(\det A)^{-1}$

09. The matrix $A = \frac{1}{\sqrt{3}}\begin{bmatrix} 1 & 1+i \\ 1-i & -1 \end{bmatrix}$ is

(a) Idempotent matrix

(b) Orthogonal matrix

(c) Hermitian matrix

(d) Skew- Hermitian matrix

10. Let A be a 2 × 2 non–zero Nilpotent matrix. Then rank of A = ____.

Scanned with CamScanner

11. The dimension of null space of the matrix $A = \begin{bmatrix} k & 1 & 2 \\ 1 & -1 & -2 \\ 1 & 1 & 4 \end{bmatrix}$ is 1. The value of k is

(a) 1 (b) – 1
(c) 0 (d) 2

12. The system of linear equations

$x - y + 2z = b_1$
$x + 2y - z = b_2$
$2y - 2z = b_3$ is inconsistent when

(a) $2b_1 - 2b_2 + 3b_3 = 0$ (b) $2b_1 + 2b_2 + 3b_3 \neq 0$
(c) $2b_1 - 2b_2 + 3b_3 \neq 0$ (d) $2b_1 - 2b_2 - 3b_3 \neq 0$

13. The value(s) of k for which the following system of equations will have non–trivial solutions is (are)

$x + (k+4)y + (4k+2)z = 0$
$(k-2)y + (2-k)z = 0$
$(k-8)y - 5kz = 0$

(a) 2 (b) – 2
(c) 2, –2 (d) 2, 2

14. Let M be a 3 × 3 non–singular matrix with det(M) = α. If M^{-1} adj(adjM) = KI then the value of K is

(a) 1 (b) α
(c) α^2 (d) α^3

15. Let A be a 3 × 3 matrix such that $A^T = A^{-1}$. Let B be another 3 × 3 matrix whose determinant is 3. What is the determinant of the matrix $A^T B^3 A$?

(a) 3 (b) 6
(c) 9 (d) 27

16. Consider 2 × 2 matrix:

$A = \begin{bmatrix} a & b \\ c & d \end{bmatrix}$

If a + d = 1 = ad – bc, then $A^3 =$

(a) 0 (b) –I
(c) –3I (d) None

17. The rank of the matrix $\begin{bmatrix} -1 & 2 & 5 \\ 2 & -4 & a-4 \\ 1 & -2 & a+1 \end{bmatrix}$ is

(a) 2 if a = 6 (b) 2 if a = 1
(c) 1 if a = 2 (d) 1 if a = – 6

18. Let $A = \begin{bmatrix} a & -1 & 4 \\ 0 & b & 7 \\ 0 & 0 & 3 \end{bmatrix}$ be a matrix with real entries. If the sum and product of all the eigen values of A are 10 and 30 respectively then $a^4 + b^4 =$ _____ .

19. If adj $A = \begin{bmatrix} 1 & 11 & 3 \\ 1 & 3 & 3 \\ 2 & 4 & 4 \end{bmatrix}$ and det(A) = 4 then matrix A =

(a) $\begin{bmatrix} 0 & -8 & 6 \\ 0.5 & -0.5 & 0 \\ -0.5 & 4.5 & 2 \end{bmatrix}$ (b) $\begin{bmatrix} 0 & -8 & 6 \\ 0.5 & -0.5 & 0 \\ -0.5 & 4.5 & -2 \end{bmatrix}$

(c) $\begin{bmatrix} 0 & -8 & 6 \\ -0.5 & 0.5 & 0 \\ 0.5 & -4.5 & -2 \end{bmatrix}$ (d) None

Scanned with CamScanner

20. If $A = \begin{bmatrix} 5 & 4 \\ 1 & 2 \end{bmatrix}$ then $\det[-A^2 + 7A - 6I]$ is _____.

21. For the homogeneous system of linear equations $AX = 0$, if the number of equations less than number of variables then the system has
(a) No solutions
(b) Unique solution
(c) Only trivial solutions
(d) Infinite solutions

22. Let k be a positive integer and let $A = \begin{bmatrix} 8 & 3\sqrt{2} & 3\sqrt{2} \\ 3\sqrt{2} & 1 & -9 \\ -3\sqrt{2} & 9 & -1 \end{bmatrix}$. If $|\text{adj } A| = K^6$ then K = _____.

23. Maximum value of a second order determinant whose each entry is either 0 or 1 is equal to
(a) –1 (b) 0
(c) 1 (d) 2

24. If $f(\theta) = \begin{vmatrix} \sec^2\theta & 1 & 1 \\ \cos^2\theta & \cos^2\theta & \operatorname{cosec}^2\theta \\ 1 & \cos^2\theta & \cot^2\theta \end{vmatrix}$ then the value of $\int_0^{\frac{\pi}{2}} f(\theta)d\theta =$
(a) $\frac{\pi}{16}$ (b) $\frac{2\pi}{16}$
(c) $\frac{3\pi}{16}$ (d) $\frac{4\pi}{16}$

25. The maximum number of different possible non–zero entries in a skew–symmetric matrix order 7.
(a) 7 (b) 14
(c) 42 (d) 21

26. The value of the determinant $\begin{vmatrix} 2014 & 2015 & 2016 & 2017 \\ 2018 & 2019 & 2020 & 2021 \\ 2022 & 2023 & 2024 & 2025 \\ 2026 & 2027 & 2028 & 2029 \end{vmatrix}$ is _____.

27. Let $A = a_{ij}$ be a matrix of order 3 × 3 where
$$a_{ij} = \begin{cases} x, & \text{if } i = j \\ 1, & \text{if } |i-j| = 1 \\ 0, & \text{otherwise} \end{cases}$$
If f(x) = det(A), then local maxima & minima occur respectively at _____.
(a) $\frac{-\sqrt{2}}{\sqrt{3}}, \frac{\sqrt{2}}{\sqrt{3}}$ (b) $\frac{\sqrt{2}}{\sqrt{3}}, \frac{-\sqrt{2}}{\sqrt{3}}$
(c) $\frac{\sqrt{2}}{\sqrt{3}}, 0$ (d) $0, \frac{\sqrt{2}}{\sqrt{3}}$

Scanned with CamScanner

Solutions

01. Ans: (d)

Sol: $A_{m\times n}\, X_{n\times 1} = 0$

If $\rho(A)$ = No. of unknowns, then $AX = 0$ has trivial solution

02. Ans: (c)

Sol: The adjacent matrix

$$[A\,|\,B] = \left[\begin{array}{ccc|c} 1 & 1 & 1 & 3 \\ 1 & 2 & 3 & 4 \\ 2 & 3 & 4 & 7 \end{array}\right]$$

After reducing to Echelon form, we get

$$[A\,|\,B] = \left[\begin{array}{ccc|c} 1 & 1 & 1 & 3 \\ 0 & 1 & 2 & 1 \\ 0 & 0 & 0 & 0 \end{array}\right]$$

From this $x + y + z = 3$, $y + 2z = 1$

There are infinitely many solutions

On solving these two equations, by choosing $z = 1$ we get

$x = 3, y = -1, z = 1$

03. Ans: (c)

04. Ans: (a)

05. Ans: (b)

Sol: Eigen values of A & $P^{-1}AP$ are same.

06. Ans: (c)

Sol: A is singular matrix iff zero is an eigen value of A.

07. Ans: (a)

Sol: Characteristic equation is

$$\lambda^3 - \lambda^2(1 + 2 + 2) + \lambda\{(4 - 1) + (2 - 4) + (2 - 2)\} - (-3) = 0$$

$$\Rightarrow \lambda^3 - 5\lambda^2 + \lambda + 3 = 0$$

$$\lambda = 1, 2 + \sqrt{7}, 2 - \sqrt{7}$$

If $\lambda_1, \lambda_2, \lambda_3$ are eigen values of A, then eigen values of A^3 are λ_1^3, λ_2^3 and λ_3^3.

$$tr(A^3) = \lambda_1^3 + \lambda_2^3 + \lambda_3^3$$

$$= 1 + \left(2+\sqrt{7}\right)^3 + \left(2-\sqrt{7}\right)^3 = 101$$

08. Ans: (a)

Sol: $\det(A^{-1}.\text{adj}A) = |A^{-1}.\text{adj}A|$

$$= |A^{-1}|.|\text{adj}A|$$

$$= |A|^{-1}|\text{adj}A|$$

$$= \frac{1}{|A|}.|A|^2$$

$$= |A| = \det A$$

09. Ans: (c)

Sol: $\left(\overline{A}\right)^T = A$

10. Ans: 1

Sol: $A^m = 0 \Rightarrow |A| = 0$

$$\Rightarrow \rho(A) < 2$$

$\therefore \rho(A) = 1$ [$\because$ A is a non-zero matrix]

Scanned with CamScanner

11. Ans: (b)

Sol: $\therefore$ Dimension of null space is

Number of columns – Rank of a matrix = 1

$3 - \rho(A) = 1 \Rightarrow \rho(A) = 2$

$$\therefore |A| = 0 \Rightarrow \begin{vmatrix} k & 1 & 2 \\ 1 & -1 & -2 \\ 1 & 1 & 4 \end{vmatrix} = 0$$

$\Rightarrow k(-4+2) - (4+2) + 2(1+1) = 0$

$\Rightarrow -2k - 6 + 4 = 0$

$\Rightarrow \quad k = -1$

12. Ans: (c)

Sol: $$[A|B] = \left[\begin{array}{ccc|c} 1 & -1 & 2 & b_1 \\ 1 & 2 & -1 & b_2 \\ 0 & 2 & -2 & b_3 \end{array}\right]$$

$R_2 - R_1$

$$\left[\begin{array}{ccc|c} 1 & -1 & 2 & b_1 \\ 0 & 3 & -3 & b_2 - b_1 \\ 0 & 2 & -2 & b_3 \end{array}\right]$$

$2R_2 - 3R_3$

$$[A|B] = \left[\begin{array}{ccc|c} 1 & -1 & 2 & b_1 \\ 0 & 3 & -3 & b_2 - b_1 \\ 0 & 0 & 0 & 2b_1 - 2b_2 + 3b_3 \end{array}\right]$$

$\therefore$ The system is inconsistent

if $2b_1 - 2b_2 + 3b_3 \neq 0$

13. Ans: (c)

Sol: $$|A| = 0 \Rightarrow \begin{vmatrix} 1 & k+4 & 4k+2 \\ 0 & k-2 & 2-k \\ 0 & k-8 & -5k \end{vmatrix} = 0$$

$\Rightarrow -5k(k-2) - (2-k)(k-8) = 0$

$\Rightarrow (-5k^2 + 10k) - (10k - k^2 - 16) = 0$

$\Rightarrow -4k^2 + 16 = 0$

$\therefore k = 2, -2$

14. Ans: (b)

Sol: $M^{-1}\,\text{adj}(\text{adj } M) = KI$

$\Rightarrow M^{-1}|M|.M = KI \quad \{\text{adj}(\text{adj}A) = |A|^{n-2}.A\}$

$\Rightarrow |M|\,I = KI$

$\Rightarrow \quad K = |M| = \alpha$

15. Ans: (d)

Sol: $|A^T B^3 A| = |A^T|.|B|^3|A| = |A|^2.|B|^3$

$= (\pm 1)^2 \times 3^3$

$= 27 \quad \{\because A = \text{Orthogonal Matrix}\}$

16. Ans: (b)

Sol: The characteristic equation is

$\lambda^2 - (a+d)\lambda + (ad - bc) = 0$

$\Rightarrow A^2 - (a+d)A + (ad - bc)I = 0$

{By Cayley– Hamilton Theorem}

$\Rightarrow A^2 - A + I = 0$

$\Rightarrow A^2 = A - I$ ..... (1)

$\Rightarrow A^3 = A^2 - A = A - I - A$ (from (1))

$\Rightarrow A^3 = -I$

17. Ans: (d)

Sol: $$A = \begin{bmatrix} -1 & 2 & 5 \\ 2 & -4 & a-4 \\ 1 & -2 & a+1 \end{bmatrix}; R_2 + 2R_1 \quad R_3 + R_1$$

$$\Rightarrow A = \begin{bmatrix} -1 & 2 & 5 \\ 0 & 0 & a+6 \\ 0 & 0 & a+6 \end{bmatrix} \approx \begin{bmatrix} -1 & 2 & 5 \\ 0 & 0 & a+6 \\ 0 & 0 & 0 \end{bmatrix}$$

$R_3 - R_2$

$\therefore \rho(A) = 1$ if $a = -6$

Scanned with CamScanner

18. Ans: 641

Sol: $a + b + 3 = 10 \quad 3ab = 30$

$a + b = 7 \quad ab = 10 \Rightarrow a, b$ are 5, 2

$a^4 + b^4 = 5^4 + 2^4 = 641$

19. Ans: (b)

Sol: adj (adj A) = $|A|.A = 4A$

$\{adj(adjA) = |A|^{n-2}.A\}$

$$A = \frac{1}{4}adj(adjA)$$

$$A = \frac{1}{4}adj(adjA) = \begin{bmatrix} 0 & -8 & 6 \\ 0.5 & -0.5 & 0 \\ -0.5 & 4.5 & -2 \end{bmatrix}$$

20. Ans: 0

Sol: $\lambda^2 - 7\lambda + 6 = 0$

$A^2 - 7A + 6I = 0$

$-A^2 + 7A - 6I = 0$

$\det(-A^2 + 7A - 6I) = 0$

21. Ans: (d)

Sol: For homogeneous system of linear equations AX = 0, if number of equations less than number of variables, it has infinite number of non-trivial solutions

22. Ans: 10

Sol: $R_2 + R_3$

$$\Rightarrow A = \begin{bmatrix} 8 & 3\sqrt{2} & 3\sqrt{2} \\ 0 & 10 & -10 \\ -3\sqrt{2} & 9 & -1 \end{bmatrix};$$

$C_2 + C_3$

$$A = \begin{bmatrix} 8 & 6\sqrt{2} & 3\sqrt{2} \\ 0 & 0 & -10 \\ -3\sqrt{2} & 8 & -1 \end{bmatrix}$$

$|A| = 10(64 + 36)$

$= 10^2 \times 10 = 10^3$

$|adjA| = |A|^2 = 10^6 = K^6 \quad \{\because |adjA| = |A|^{n-1}\}$

$\therefore K = 10$

23. Ans: (c)

Sol: Let $A = \begin{bmatrix} a & b \\ c & d \end{bmatrix} \Rightarrow |A| = ad - bc$

$ad = 1$ & $bc = 0$

Max value of $|A| = 1$

24. Ans: (c)

Sol: $f(\theta) = \sec^2\theta\{\cos^2\theta.\cot^2\theta - \cos^2\theta.\operatorname{cosec}^2\theta\} - \{\cos^2\theta\cot^2\theta - \operatorname{cosec}^2\theta\} + \{\cos^4\theta - \cos^2\theta\}$

$$f(\theta) = (\cot^2\theta - \operatorname{cosec}^2\theta) - \left(\frac{\cos^4\theta - 1}{\sin^2\theta}\right) + \cos^2\theta(\cos^2\theta - 1)$$

$f(\theta) = -1 - \{-\cos^2\theta - 1\} - \sin^2\theta\cos^2\theta$

$f(\theta) = \cos^4(\theta)$

$$\int_0^{\frac{\pi}{2}} \cos^4(\theta)d\theta = \frac{3}{4}.\frac{1}{2}.\frac{\pi}{2}$$

$$= \frac{3\pi}{16}$$

25. Ans: (c)

Sol: All elements above (or) below the principal diagonal elements are arbitrary elements. Number of elements above & below the diagonal elements of $n \times n$ matrix

$= n(n-1) = 7 \times 6 = 42$

Scanned with CamScanner

26. Ans: 0

Sol: $R_2 - R_1$,

$R_3 - R_1$,

$R_4 - R_1$

$$\begin{vmatrix} 2014 & 2015 & 2016 & 2017 \\ 4 & 4 & 4 & 4 \\ 8 & 8 & 8 & 8 \\ 12 & 12 & 12 & 12 \end{vmatrix} = 0$$

R_2 and R_3 are proportional.

27. Ans: (b)

Sol: $A = \begin{bmatrix} x & 1 & 0 \\ 1 & x & 1 \\ 0 & 1 & x \end{bmatrix}$

$|A| = x(x^2 - 1) - (x - 0)$

$= x^3 - 2x = f(x)$

$f^{I}(x) = 3x^2 - 2$, $f^{II}(x)$

$= 6x$

$f^{I}(x) = 0 \Rightarrow x = \pm\sqrt{\frac{2}{3}}$

$f^{II}\left(\sqrt{\frac{2}{3}}\right) < 0$ & $f^{II}\left(-\sqrt{\frac{2}{3}}\right) > 0$

Scanned with CamScanner

Chapter 6 Probability & Statistics

01. If three distinct numbers are chosen randomly from the first 100 natural numbers, then the probability that all the three of them are divisible by both 2 & 3, is_____.

02. A fair die is rolled. The probability that first time 3 occurs at the even throw, is

(a) $\frac{1}{6}$ (b) $\frac{5}{11}$

(c) $\frac{6}{11}$ (d) $\frac{5}{36}$

03. Two marbles are drawn in succession from a box containing 10 red, 30 white, 20 blue and 15 orange marbles; replacement being made after each draw find the probability that both are white

(a) $\frac{3}{25}$ (b) $\frac{4}{25}$

(c) $\frac{1}{5}$ (d) $\frac{6}{25}$

04. If there are 5 people in a row, what is the probability that no two of them have same birth day

(a) $\frac{1}{(365)^5}$ (b) $\frac{2}{(365)^5}$

(c) $\frac{{}^5C_2}{(365)^5}$

(d) $\left(1-\frac{1}{365}\right)\left(1-\frac{2}{365}\right)\left(1-\frac{3}{365}\right)\left(1-\frac{4}{365}\right)$

05. Let $P=\begin{bmatrix}1 & a\\ b & c\end{bmatrix}$, where a, b, c are chosen randomly from the set $\{1,2,3,4,5\}$. The probability that P is singular matrix is

(a) $\frac{2}{25}$ (b) $\frac{1}{11}$

(c) $\frac{2}{21}$ (d) $\frac{1}{5}$

06. Three numbers are chosen at random without replacement from $\{1, 2, 3, \ldots\ldots, 10\}$. What is the probability that minimum of the chosen numbers is 3 or their maximum is 7?

(a) $\frac{11}{30}$ (b) $\frac{11}{40}$

(c) $\frac{1}{7}$ (d) $\frac{1}{8}$

07. A ship is fitted with three engines E_1, E_2 & E_3. The engines function independently of each other with respective probabilities $\frac{1}{2}, \frac{1}{4} \& \frac{1}{4}$ for the ship to be operational atleast two of its engines must function.

Let X denote the event that the ship is operational and Let X_1, X_2, X_3 denote respectively the events that the engines E_1, E_2, E_3 are functioning

Find (i) $P(X|X_1)$ (ii) $P(X_1^c|X)$ (iii) $P(X|X_1^c)$

Scanned with CamScanner

08. Two coins with probability of heads u & v, respectively are independent. If P[both coins show up tails] = P[both coins show up heads], then u + v equals to _____

(a) $\frac{1}{4}$ (b) $\frac{1}{2}$

(c) $\frac{3}{4}$ (d) 1

09. For the events A & B to be independent the probability that both occur is $\frac{1}{6}$ and probability that neither of them occur is $\frac{1}{3}$. Then the probability of occurrence of A is

(a) $\frac{1}{2}$ or $\frac{1}{3}$ (b) $\frac{1}{4}$

(c) $\frac{1}{2}$ only (d) $\frac{1}{3}$ only

10. A die is thrown twice and the sum of the dots on the two faces appeared, is observed to be 7. The conditional probability that number 2 has appeared atleast once is

(a) $\frac{1}{2}$ (b) $\frac{2}{3}$

(c) $\frac{1}{3}$ (d) $\frac{1}{4}$

11. Two real numbers x & y are selected at random, given that $0 \le x \le 1$, $0 \le y \le 1$. The probability that $y^2 \le x$ is

(a) $\frac{1}{3}$ (b) $\frac{3}{4}$ (c) $\frac{2}{3}$ (d) $\frac{1}{4}$

12. Two letters are chosen one after another without replacement from the English alphabet. What is the probability that only one of the letters is vowel?

(a) $\frac{21}{65}$ (b) $\frac{105}{650}$

(c) $\frac{42}{65}$ (d) $\frac{21}{650}$

13. A letter is known to have come from either LONDON or WASHINGTON. On the post mark, only the two consecutive letters "ON" are visible. Find the probability that the letter is from LONDON.

(a) $\frac{18}{23}$ (b) $\frac{19}{23}$

(c) $\frac{20}{23}$ (d) $\frac{21}{23}$

14. A die is thrown six times, it is being known that each time a different digit is shown. The probability that a sum of 12 will be obtained in the first three throws is

(a) $\frac{5}{24}$ (b) $\frac{25}{216}$

(c) $\frac{3}{20}$ (d) $\frac{1}{12}$

15. The chance that doctor 'A' will diagnose a disease X correctly is 60%. The chance that a patient will die by his treatment after correct diagnosis is 40% and the chance of death by wrong diagnosis is 70%. A patient of doctor A who had disease X died. The chance that his disease was correctly diagnosed is _____.

Scanned with CamScanner

(a) $\frac{6}{13}$ (b) $\frac{6}{12}$

(c) $\frac{7}{12}$ (d) $\frac{7}{13}$

16. If $f(x) = 2x$ where $0 \le x \le 1$
$= 0$ otherwise

Find (i) $P(x < \frac{1}{2})$

(ii) $P(\frac{1}{4} < x < \frac{1}{2})$

(iii) $P(x > \frac{3}{4} \mid x > \frac{1}{2})$

17. A random variable x takes values 0, 1, 2, ... with probability proportional to

$(x+1)\left(\frac{1}{5}\right)^x$. The probability that $x \le 5$ is

(a) 0.6997 (b) 0.7997

(c) 0.8997 (d) 0.9997

18. Let X be a random variable with pdf

$f(x) = C(1 - x^2)$, $0 < x < 1$

Then find

(i) C (ii) mean (iii) variance

(iv) median (v) mode

19. Let X denote the outcome of throwing a fair die. Find the mean & variance of X

X	1	2	3	4	5	6
P(X)	1/6	1/6	1/6	1/6	1/6	1/6

20. For a random variable X, E(X) = 10 and V(X) = 25. Find the positive values of a & b such that E(Y) = 0 & V(Y) = 1, where Y = aX – b.

21. A continuous random variable X has the PDF

$f(x) = a + bx$, $0 \le x \le 1$

$= 0$, else where

If the mean of the distribution is $\frac{1}{3}$. Find the values of a & b.

22. Can a function defined as

$f(x) = |x|$, $-1 \le x \le 1$

$= 0$, elsewhere

be the PDF of a continuous random variable?

23. A player tosses three fair conis. He win's Rs 500/- if three heads occur, Rs 300 if two heads occur and Rs 100 if one head occurs. If the game is to be fair, how much should he loose if no head occurs?

24. A box contains 8 items of which two are defective. A man selects three items from the box. Find the expected number of defective items he has shown.

Scanned with CamScanner

Solutions

01. Ans: $\frac{4}{1155}$

Sol: Total number of cases for selecting 3 distinct numbers from first 100 natural numbers is

$n(s) = {}^{100}C_3$

All the three of them are divisible by 2 & 3 i.e. all the three of them are divisible by 6 $=\{6, 12, 18, \ldots\ldots 96\} = 16$ cases.

Thus, out of 16 we have to select 3.

So favourable number of cases $= {}^{16}C_3$

$\therefore$ Required probability $= \frac{{}^{16}C_3}{{}^{100}C_3} = \frac{4}{1155}$

02. Ans: (b)

Sol: Let p be probability of getting '3' on a die

$\Rightarrow p = \frac{1}{6}$ & $q = \frac{5}{6}$

$\therefore$ p{first time 3 occurs at the even throw}

$$= qp + qqqp + qqqqqp + \ldots\ldots$$

$$= qp\{1 + q^2 + q^4 + \ldots\ldots\ldots\}$$

$$= qp\left\{\frac{1}{1-q^2}\right\}$$

$$= \frac{5}{6} \times \frac{1}{6}\left\{\frac{1}{1-\frac{25}{36}}\right\}$$

$$= \frac{5}{36} \times \frac{36}{11}$$

$$= \frac{5}{11}$$

03. Ans: (b)

Sol: Total marbles

$= 10+30+20+15 = 75$

P[both are white]

= P[first is white and second is white]

$$= \frac{30}{75} \times \frac{30}{75} = \frac{4}{25}$$

04. Ans: (d)

Sol: Since birthday of any person can fall on any one of 365 days.

So, total number of cases $= 365^5$

If the birthday of all the five persons fall on different days, then the number of favourable cases are (365) (365–1) (365 – 2) (365 – 3) (365 – 4) because in this case the birthday of first person can fall on any one of 365 days, the birthday of second person can fall on the remaining 364 days and so on.

Hence, the probability p, that birthday of all the 5 people are different or the probability that no two of them have the same birthday is given by

$$P = \frac{(365)(365-1)(365-2)(365-3)(365-4)}{(365)^5}$$

$$P = \left(1-\frac{1}{365}\right)\left(1-\frac{2}{365}\right)\left(1-\frac{3}{365}\right)\left(1-\frac{4}{365}\right)$$

Scanned with CamScanner

05. Ans: (a)

Sol: Total number of cases to fill the places a,b,c by 1, 2, 3, 4, 5 = 5 × 5 × 5 = 125

$P = \begin{bmatrix} 1 & a \\ b & c \end{bmatrix}$ is singular matrix

So, $|P| = 0$

$\Rightarrow c - ab = 0$

favourable cases for $c - ab = 0$ are 10 cases.

c	a	b
1	1	1
2	1	2
2	2	1
3	3	1
3	1	3
4	1	4
4	4	1
4	2	2
5	1	5
5	5	1

$\therefore$ probability $= \frac{10}{125} = \frac{2}{25}$

06. Ans: (b)

Sol: Let A = minimum of the chosen number is 3 {Remaining two are greater than 3}

B = maximum of the chosen number is 7 {Remaining two are less than 7}

$A \cap B$ = minimum of the chosen number is 3 and the maximum of the chosen number is 7 {Remaining one is any number between 3 & 7}

$$P(A) = \frac{{}^1C_1 \times {}^7C_2}{{}^{10}C_3} = \frac{7}{40}$$

$$P(B) = \frac{{}^1C_1 \times {}^6C_2}{{}^{10}C_3} = \frac{1}{8}$$

$$P(A \cap B) = \frac{{}^1C_1 \times {}^1C_1 \times {}^3C_1}{{}^{10}C_3} = \frac{1}{40}$$

$$P(A \cup B) = P(A) + P(B) - P(A \cap B)$$

$$= \frac{7}{40} + \frac{1}{8} - \frac{1}{40} = \frac{11}{40}$$

07.

Sol: $P(X_1) = \frac{1}{2}, P(X_2) = \frac{1}{4}, P(X_3) = \frac{1}{4}$

P{ship X is operational} = P{Engines X_1, X_2 function and X_3 does not function (or) X_1, X_3 function and X_2 does not (or) X_2, X_3 function and X_1 does not (or) X_1, X_2, X_3 function}

$$= \frac{1}{2} \times \frac{1}{4} \times \frac{3}{4} + \frac{1}{2} \times \frac{1}{4} \times \frac{3}{4} + \frac{1}{4} \times \frac{1}{4} \times \frac{1}{2} + \frac{1}{2} \times \frac{1}{4} \times \frac{1}{4}$$

$$P(X) = \frac{1}{4}$$

(i) $P(X|X_1) = \frac{P(X \cap X_1)}{P(X_1)}$

$$= \frac{P\left\{\begin{matrix}\text{ship is operational and first} \\ \text{engine must function}\end{matrix}\right\}}{P\{\text{first engine function}\}}$$

$$= \frac{P\{(X_1X_2X_3^c) \text{ or } (X_1X_3X_2^c) \text{ or } X_1X_2X_3\}}{P(X_1)}$$

$$= \frac{\frac{1}{2} \times \frac{1}{4} \times \frac{3}{4} + \frac{1}{2} \times \frac{1}{4} \times \frac{3}{4} + \frac{1}{2} \times \frac{1}{4} \times \frac{1}{4}}{\left(\frac{1}{2}\right)}$$

Scanned with CamScanner

$$= \frac{\left(\frac{1}{2}\right)\left(\frac{1}{4}\right)\left\{\frac{3}{4}+\frac{3}{4}+\frac{1}{4}\right\}}{\left(\frac{1}{2}\right)}$$

$$= \frac{1}{4}\times\frac{7}{4} = \frac{7}{16}$$

(ii) $P(X_1^C \mid X) = 1 - P(X_1 \mid X)$

$$= 1 - \frac{P(X \cap X_1)}{P(X)}$$

$$\Rightarrow P(X_1^C \mid X) = 1 - \frac{\left(\frac{1}{2}\right)\left(\frac{1}{4}\right)\left\{\frac{3}{4}+\frac{3}{4}+\frac{1}{4}\right\}}{\left(\frac{1}{4}\right)}$$

$$= 1 - \frac{1}{2}\times\frac{7}{4} = 1 - \frac{7}{8} = \frac{1}{8}$$

(iii) $P(X \mid X_1^C) = \frac{P(X \cap X_1^C)}{P(X_1^C)}$

$$= \frac{P\left\{\begin{matrix}\text{ship is operational and} \\ \text{first engine should not function}\end{matrix}\right\}}{1 - P(X_1)}$$

$$= \frac{P(X_1^C X_2 X_3)}{1 - P(X_1)} = \frac{\frac{1}{2}\times\frac{1}{4}\times\frac{1}{4}}{\frac{1}{2}} = \frac{1}{16}$$

08. Ans: (d)

Sol: P[first coin shows up head] = u

P[second coin shows up head] = v

P[first coin shows up tail] = 1 – u

P[second coin shows up tail] = 1 – v

Given:

P[both coins show up tails]

= P[both coins show up heads]

$\Rightarrow (1 - u)(1 - v) = uv$

$\Rightarrow 1 - v - u + uv = uv$

$\Rightarrow u + v = 1$

09. Ans: (a)

Sol: $P(A \cap B) = \frac{1}{6}$, $P[A^C \cap B^C] = \frac{1}{3}$

$P(A \cup B)^C = 1 - P[A \cup B]$

$\Rightarrow P[A^C \cap B^C] = 1 - P(A) - P(B) + P(A \cap B)$

$\Rightarrow \frac{1}{3} = 1 - P(A) - P(B) + \frac{1}{6}$

$\Rightarrow P(A) + P(B) = \frac{5}{6}$ .....(1)

$P(A).P(B) = \frac{1}{6}$ .....(2)

($\because$ A & B are independent events)

Solving equation (1) & (2)

P(A) is $\frac{1}{2}$ or $\frac{1}{3}$

So that $P(A) + P(B) = \frac{5}{6}$

10. Ans: (c)

Sol: Method – I

Two dice are thrown

<u>Sum = 7</u>

(1, 6)

(6, 1)

(2, 5)

(5, 2)

(3, 4)

(4, 3)

Scanned with CamScanner

Total number of cases for sum is 7 = 6

Favourable cases for 2 appears at least once

$= 2\{(2,5), (5,2)\}$

So, probability $= \frac{2}{6} = \frac{1}{3}$

Method – II

Two dice are thrown

Total number of cases $= 6 \times 6 = 36$

A = sum of the dots on dice getting as 7 is

$\{(1, 6), (6, 1) (2, 5), (5, 2) (3, 4), (4, 3)\}$

= 6 cases

B = Number 2 appears atleast once $\{(2, 1), (1, 2), (2, 2), (2, 3), (3, 2), (2, 4), (4, 2), (2, 5), (5, 2), (2, 6), (6, 2)\}$

$A \cap B$ = (sum = 7) and (number 2 appears atleast once)

$= ((2,5), (5, 2)\} = 2$ cases

$$P(A) = \frac{6}{36},\ P(B) = \frac{11}{36},\ P(A \cap B) = \frac{2}{36}$$

$$P(B|A) = \frac{P(A \cap B)}{P(A)} = \frac{\frac{2}{36}}{\frac{6}{36}} = \frac{1}{3}$$

11. Ans: (c)

Sol: The sample space is a square whose sides are unit segments of coordinate axes. The figure whose set of points correspond to the outcomes favourable to the event $y^2 \le x$ is bounded by the graphs of the function.

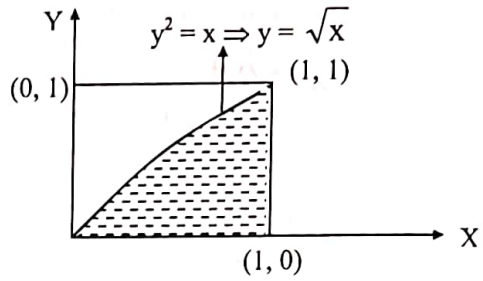

$y^2 = x$, $y = 0$ and $x = 1$

$P[y^2 \le x] = P$[shaded portion below $y^2 = x$ curve in first quadrant]

$$= \int_0^1 \sqrt{x}\, dx = \frac{2}{3}$$

12. Ans: (a)

Sol: Total number of alphabets = 26

Only one of the letter is vowel means first is vowel and second is NOT or first is NOT vowel and second is vowel.

Favourable number of cases

$$= \frac{5}{26} \times \frac{21}{25} + \frac{21}{26} \times \frac{5}{25} = \frac{21}{65}$$

13. Ans: (a)

Sol: E_1 = letter came from LONDON

E_2 = letter came from WASHINGTON

E = two consecutive letters ON visible

$$P(E_1) = \frac{1}{2},\ P(E_2) = \frac{1}{2}$$

$$P(E|E_1) = \frac{2}{5},\ P(E|E_2) = \frac{1}{9}$$

P(E) = P{two consecutive letters ON visible on the post mark which is received from either LONDON or WASHINGTON}

$$= \frac{1}{2} \times \frac{2}{5} + \frac{1}{2} \times \frac{1}{9} = \frac{23}{90}$$

Scanned with CamScanner

$$P(E_1|E) = \frac{P(E \cap E_1)}{P(E)}$$

$$= \frac{P(E_1).P(E|E_1)}{P(E)} \left\{ \begin{array}{l} \text{from multiplication} \\ \text{rule} \end{array} \right\}$$

$$= \frac{\frac{1}{2} \times \frac{2}{5}}{\frac{23}{90}} = \frac{1}{5} \times \frac{90}{23} = \frac{18}{23}$$

14. Ans: (c)

Sol: The sum is 12 in the first three throws if they are (1, 5, 6) in any order or (2, 4, 6) in any order or (3, 4, 5) in any order. The required probability P is

$$P = \frac{1}{6} \times \frac{1}{5} \times \frac{1}{4} \times 3! + \frac{1}{6} \times \frac{1}{5} \times \frac{1}{4} \times 3! + \frac{1}{6} \times \frac{1}{5} \times \frac{1}{4} \times 3!$$

$$P = \frac{3}{20}$$

Note: After throwing 1, in the next throw 1 cannot come etc.,)

15. Ans: (a)

Sol: E_1 = doctor A diagnoses a disease correctly

E_2 = doctor A wrongly diagnose a disease

E = patient dies

$P(E_1) = 0.6, P(E_2) = 0.4$

$P(E|E_1) = 0.4, P(E|E_2) = 0.7$

We have to find $P(E_1|E)$

By Bayes Theorem

$$P(E_1|E) = \frac{P(E \cap E_1)}{P(E)}$$

$$= \frac{P(E_1).P(E|E_1)}{P(E_1)P(E|E_1) + P(E_2)P(E|E_2)}$$

$$= \frac{0.6 \times 0.4}{0.6 \times 0.4 + 0.4 \times 0.7} = \frac{6}{13}$$

16.

Sol: (i) $P(x < \frac{1}{2}) = \int_0^{1/2} 2x\,dx = [x^2]_0^{1/2} = \frac{1}{4}$

(ii) $P(\frac{1}{4} < x < \frac{1}{2}) = \int_{1/4}^{1/2} 2x\,dx$

$$= [x^2]_{1/4}^{1/2}$$

$$= \frac{1}{4} - \frac{1}{16} = \frac{4-1}{16} = \frac{3}{16}$$

(iii) $P[x > \frac{3}{4} \mid x > \frac{1}{2}]$

$$= \frac{P\left[\left(x > \frac{3}{4}\right) \cap \left(x > \frac{1}{2}\right)\right]}{P\left(x > \frac{1}{2}\right)}$$

$$= \frac{P\left[x > \frac{3}{4}\right]}{P\left[x > \frac{1}{2}\right]} \frac{\int_{3/4}^{1} 2x\,dx}{\int_{1/2}^{1} 2x\,dx}$$

$$= \frac{[x^2]_{3/4}^{1}}{[x^2]_{1/2}^{1}} = \frac{\frac{7}{16}}{\frac{3}{4}} = \frac{7}{12}$$

17. Ans: (d)

Sol: $P[X = x] \propto \frac{(x+1)}{5^x}$

$$\Rightarrow P[X = x] = \frac{k(x+1)}{5^x}$$

Since $\sum_{x=0}^{\infty} P(X = x) = 1 \Rightarrow \sum_{x=0}^{\infty} \frac{k(x+1)}{5^x} = 1$

$$\Rightarrow k\left\{1 + \frac{2}{5} + \frac{3}{5^2} + \frac{4}{5^3} + \frac{5}{5^4} + \ldots\ldots\right\} = 1$$

$$\Rightarrow k\left\{1 - \frac{1}{5}\right\}^{-2} = 1$$

Scanned with CamScanner

$$\Rightarrow k\left\{\frac{25}{16}\right\}=1$$

$$\therefore\ k=\frac{16}{25}$$

So, $P(X \le 5]$

$= [P\ X = 0] + P[X = 1] + \ldots + P[X = 5]$

$$=\left[k+\frac{2k}{5}+\frac{3k}{5^2}+\frac{4k}{5^3}+\frac{5k}{5^4}+\frac{6k}{5^5}\right]$$

$$=\left[k+\frac{2}{5}+\frac{3}{5^2}+\frac{4}{5^3}+\frac{5}{5^4}+\frac{6}{5^5}\right]$$

$$=\frac{16}{25}\left[1+\frac{2}{5}+\frac{3}{5^2}+\frac{4}{5^3}+\frac{5}{5^4}+\frac{6}{5^5}\right]=0.9997$$

18.

Sol: (i) since f(x) is a PDF we have

$$\int_0^1 f(x)dx=1 \Rightarrow \int_0^1 C(1-x^2)dx=1$$

$$\Rightarrow C\left[x-\frac{x^3}{3}\right]_0^1=1$$

$$\Rightarrow C\left[1-\frac{1}{3}\right]=1$$

$$\Rightarrow C.\frac{2}{3}=1$$

$$\Rightarrow C=\frac{3}{2}$$

(ii) $E(X)=\int_0^1 x\,f(x)dx=\int_0^1 x.\frac{3}{2}(1-x^2)dx$

$$=\frac{3}{2}\int_0^1(x-x^3)dx=\frac{3}{2}\left[\frac{x^2}{2}-\frac{x^4}{4}\right]_0^1$$

$$=\frac{3}{2}\left[\frac{1}{2}-\frac{1}{4}\right]=\frac{3}{2}\times\frac{2-1}{4}=\frac{3}{8}$$

(iii) $E(X^2)=\int_0^1 x^2 f(x)dx=\int_0^1 x^2\frac{3}{2}(1-x^2)dx$

$$=\frac{3}{2}\int_0^1(x^2-x^4)dx=\frac{3}{2}\left[\frac{x^3}{3}-\frac{x^5}{5}\right]_0^1$$

$$=\frac{3}{2}\left[\frac{1}{3}-\frac{1}{5}\right]=\frac{3}{2}\times\frac{2}{15}=\frac{1}{5}$$

$$\sigma_x^2=V(x)=E(X^2)-[E(X)]^2$$

$$=\frac{1}{5}-\frac{9}{64}=\frac{64-45}{320}$$

$$=\frac{19}{320}$$

(iv) Median of X is $\int_0^m f(x)dx=\frac{1}{2}$

$$\Rightarrow \int_0^m\frac{3}{2}(1-x^2)dx=\frac{1}{2}$$

$$\Rightarrow 3\int_0^m(1-x^2)dx=1$$

$$\Rightarrow \left[x-\frac{x^3}{3}\right]_0^m=\frac{1}{3}$$

$$\Rightarrow m-\frac{m^3}{3}=\frac{1}{3}$$

$$\Rightarrow 3m-m^3=1$$

$$\Rightarrow m^3-3m+1=0$$

One of the possible 'm' value in the internal [0, 1] is m = 0.34375 (approx)

(v) $f(x)=\frac{3}{2}(1-x^2)=\frac{3}{2}-\frac{3}{2}x^2$

$$f'(x)=-\frac{3}{2}\times 2x=-3x,\ f''(x)=-3$$

$f'(x)=0$

$\Rightarrow x = 0$ is the stationary point $f''(0)<0$

$\therefore\ x = 0$ is the mode.

Scanned with CamScanner

19.

Sol: Mean : E(X) =

$$\sum_{x=1}^{6} xP(X) = 1\times\frac{1}{6}+2\times\frac{1}{6}+3\times\frac{1}{6}+4\times\frac{1}{6}+5\times\frac{1}{6}+6\times\frac{1}{6}$$

$$\Rightarrow E(X)=\frac{7}{2}$$

Variance: $V(X) = \sigma_x^2$

$$=E(X^2)-[E(X)]^2 \ldots\ldots (1)$$

$$E(X^2) = \sum_{x=1}^{6} x^2P(X)$$

$$=1^2\times\frac{1}{6}+2^2\times\frac{1}{6}+3^2\times\frac{1}{6}+4^2\times\frac{1}{6}+5^2\times\frac{1}{6}+6^2\times\frac{1}{6}$$

$$=\frac{1}{6}\{1^2+2^2+\ldots\ldots\ldots+6^2\}$$

$$=\frac{1}{6}\frac{6(7)(13)}{6}=\frac{91}{6}$$

$$V(X) = E(X^2)-[E(X)]^2$$

$$=\frac{91}{6}-\left(\frac{7}{2}\right)^2=\frac{91}{6}-\frac{49}{4}$$

$$=\frac{182-147}{12}=\frac{35}{12}$$

Note: If n dice are thrown

(i) Expected value or Mean of the sum of numbers of points on them is

$$E(X)=\frac{7n}{2}$$

(ii) Variance of the sum of numbers of points on them is

$$V(X)=\frac{35n}{12}$$

20.

Sol: $Y = aX - b$

$$\Rightarrow E(Y) = E[(aX-b)] = a\,E(X) - b$$

$$\Rightarrow \quad 0 = 10\,a - b \ldots\ldots\ldots\ldots (1)$$

$$V(Y) = V(aX-b)$$

$$\Rightarrow \quad 1 = a^2V(X) = 25a^2$$

$$\Rightarrow a^2 = \frac{1}{25} \Rightarrow a = \frac{1}{5}$$

From (1), $10\times\frac{1}{5}-b=0$

$$\Rightarrow b = 2$$

$$\therefore a=\frac{1}{5}\ \&\ b=2$$

21.

Sol: $\int_0^1 f(x)dx = 1$

$$\Rightarrow \int_0^1 (a+bx)dx = 1 \Rightarrow \left[ax+\frac{bx^2}{2}\right]_0^1 = 1$$

$$\Rightarrow a+\frac{b}{2}=1$$

$$\Rightarrow 2a+b=2 \text{ ------(1)}$$

Mean:

$$E(X) = \int_0^1 x\,f(x)dx = \int_0^1 x(a+bx)dx = \frac{1}{3}$$

$$=\int_0^1 (ax+bx^2)dx = \frac{1}{3}$$

$$=\left[\frac{ax^2}{2}+\frac{bx^3}{3}\right]_0^1=\frac{1}{3}$$

$$=\frac{a}{2}+\frac{b}{3}=\frac{1}{3}$$

$$=\frac{3a+2b}{6}=\frac{1}{3}$$

$$\Rightarrow 3a+2b=2 \ldots\ldots\ldots\ldots (2)$$

By solving (1) & (2)

$$\therefore a=2,\ b=-2$$

Scanned with CamScanner

22.

Sol: To check whether f(x) is a PDF of a continuous rv, show $\int_{-\infty}^{\infty} f(x)dx = 1$

$\Rightarrow \int_{-1}^{1} |x|dx = 1$ (To show)

$\int_{-1}^{1} |x|dx = 2\int_{0}^{1} |x|dx$

$\{\because |x| \text{ is even function}\}$

$= 2\int_{0}^{1} x\,dx$

$= 2\left(\frac{x^2}{2}\right)_0^1 = 1^2 - 0^2 = 1$

23.

Sol: Let X be number of times heads occurs where three fair coins tossed.

X	0	1	2	3
P(X)	1/8	3/8	3/8	1/8

Expected value of the game

$= 500 \times \frac{1}{8} + 300 \times \frac{3}{8} + 100 \times \frac{3}{8} - \frac{x}{8}$

[x = loosing amount]

$\Rightarrow 0 = \frac{500 + 900 + 300 - x}{8}$

$\Rightarrow x = 1700$

Note:

(1) If expected value of the game = 0, the game is said to be fair

(2) If expected value of the game > 0, the game is said to be favourable to the player

(3) If expected value of the game < 0, the game is said to be unfavourable to the player.

24.

Sol: Let X = Number of defective items

Total number of ways for selecting 3 items out of 8 = ${}^8C_3 = 56$

$P(X = 0) = \frac{{}^6C_3}{{}^8C_3} = \frac{5}{14}$

$P(X = 1) = \frac{{}^2C_1 \times {}^6C_2}{{}^8C_3} = \frac{15}{28}$

$P(X = 2) = \frac{{}^2C_2 \times {}^6C_1}{{}^8C_3} = \frac{3}{28}$

X	0	1	2
P(X)	5/14	15/28	3/28

$\therefore$ Expected number of defective items

$= 0 \times \frac{5}{14} + 1 \times \frac{15}{28} + 2 \times \frac{3}{28}$

$= \frac{3}{4}$

Scanned with CamScanner

Chapter 7 Calculus

01. The function $y = |3-9x|$ is

(a) Continuous every where and differentiable everywhere except at $\frac{1}{3}$

(b) Continuous every where and differentiable every where

(c) Continuous every where except at $\frac{1}{3}$ and differentiable everywhere

(d) Continuous and differentiable every where except at $\frac{1}{3}$

02. The value of $\underset{x\to 0}{\text{Lt}} \frac{e^{x^2} - \cos x}{x^2}$ is

(a) $\frac{1}{2}$ (b) 1 (c) $\frac{3}{2}$ (d) 2

03. The value of 'C' using Lagrange's mean value theorem for $f(x) = 8x - x^2$ in [0, 8]

(a) 4 (b) 8

(c) 0 (d) None of these

04. $\int_0^{\frac{\pi}{2}} \min(\sin x, \cos x)\,dx =$

(a) 2 (b) $2+\sqrt{2}$

(c) $2-\sqrt{2}$ (d) None

05. Let $f(x, y) = \cos(xy) + x\cos y$. The value of $f_x(2, \frac{\pi}{2}) + f_y(2, \frac{\pi}{2})$ is

(a) 2 (b) – 2

(c) 3 (d) –3

06. $\int_{-1}^{1} \frac{x^9}{x^4 + 2|x| + 1}\,dx =$

(a) 0 (b) 1

(c) 9 (d) 10

07. For the function $f(x) = \sqrt{x}$, $x \in (0,b)$. The number C satisfying the mean value theorem is C = 1, then b is

(a) 0 (b) 4

(c) 2 (d) 3

08. $\int_{\frac{3\pi}{4}}^{\frac{4\pi}{3}} \frac{\sin x.\cos x}{|\cos x|}\,dx = \frac{K}{2}$, then the value of K is

(a) $\sqrt{2}-1$ (b) $1-\sqrt{2}$

(c) $2-\sqrt{2}$ (d) $\sqrt{2}-2$

09. Let $f(x,y) = \alpha x^2 + xy + \beta y^2$, $\alpha \neq 0$, $\beta \neq 0$, $4\alpha\beta \neq 1$. What is the sufficient condition on α & β such that (0, 0) is a local maxima?

(a) $\alpha > 0$ & $4\alpha\beta > 1$

(b) $\alpha > 0$, & $4\alpha\beta < 1$

(c) $\alpha < 0$ & $4\alpha\beta > 1$

(d) $\alpha < 0$, $4\alpha\beta < 1$

Scanned with CamScanner

10. Find the greatest and least values of the function.

$f(x) = 2x^3 - 3x^2 - 12x + 1$ on $[-2, \frac{5}{2}]$

(a) 8, –19 (b) –3, $\frac{-33}{2}$

(c) 8, 19 (d) 3, $\frac{33}{2}$

11. If f(x) = sin |x| + cos |x| then $\frac{df}{dx}$ at $x = \frac{-\pi}{4}$ is _____.

12. If $f(x) = \begin{cases} ax^2 + 1, & x \le 1 \\ x^2 + ax + b, & x > 1 \end{cases}$

is differentiable at x = 1, then

(a) a = 1, b = 1 (b) a = 1, b = 0

(c) a = 2, b = 0 (d) a = 2, b = 1

13. The maximum value of $\left(\frac{1}{x}\right)^{2x^2}$; x > 0, is

(a) e^e (b) $e^{\frac{1}{e}}$

(c) e (d) $\frac{1}{e}$

14. Let u = tan [xy(x+y)], then

(a) $xu_x + yu_y = 3xy(x+y)\sec^2[xy(x+y)]$

(b) $xu_x + yu_y = \frac{1}{3}xy(x+y)\sec^2[xy(x+y)]$

(c) $xu_x + yu_y = -\frac{1}{3}xy(x+y)\sec^2[xy(x+y)]$

(d) $xu_x + yu_y = -3xy(x+y)\sec^2[xy(x+y)]$

15. $\int_0^1 \frac{x^2 dx}{\sqrt{x^6+1}}$

(a) $3\log(1+\sqrt{2})$ (b) $\frac{1}{3}\log(1+\sqrt{2})$

(c) $\log(1+\sqrt{2})$ (d) $9\log(1+\sqrt{2})$

16. If $f^1(x) = e^x$ and f(0) = 5, then from mean value theorem f(1) lies between

(a) 1 and 5 (b) 5 and 6

(c) 6 and 7.718 (d) None

17. $\lim_{x\to 0}\left[\frac{2x^2-3x+4}{x} + \frac{5x-4}{x}\right] =$ _____

18. $\lim_{x\to 3}\frac{|4x-12|}{x-3} =$ _____

(a) 4 (b) –4

(c) 0 (d) Does not exist

19. The values of 'a' such that

$f(x) = \begin{cases} x^2 + 2x & \text{for } x < a \\ -1 & \text{for } x \ge a \end{cases}$

is continuous every where

(a) a = – 1 only (b) a = –2 only

(c) a = ±1 (d) a = ± 2

20. $\lim_{x\to 0}\frac{x - \tan x}{x^3} =$ _____

(a) $\frac{-1}{3}$ (b) $\frac{1}{3}$

(c) 0 (d) 1

Scanned with CamScanner

21. $\lim_{x \to 0} \left(\frac{1}{x}\right)^{1-\cos x} =$ _____

(a) e
(b) $\frac{1}{e}$
(c) 1
(d) None

22. Let $f(x) = \begin{cases} x^2 \sin\left(\frac{1}{x}\right) & \text{for } x \neq 0 \\ 0 & \text{for } x = 0 \end{cases}$

Then f(x) at x = 0 is

(a) Continuous and derivable
(b) Continuous but not derivable
(c) Derivable but not continuous
(d) Neither continuous nor derivable

23. If $f(x) = \frac{\log x - \log 5}{x - 5}$ for $x \neq 5$ is continuous at x = 5 then f(5) = _____

(a) 5
(b) – 5
(c) $\frac{1}{5}$
(d) $\frac{-1}{5}$

Scanned with CamScanner

Solutions

01. Ans: (a)

Sol: $|x-a|$ is continuous everywhere and differentiable everywhere except at x = a.

02. Ans: (c)

Sol: $\underset{x\to 0}{\text{Lt}} \dfrac{e^{x^2}-\cos x}{x^2}\left(\dfrac{0}{0}\text{form}\right)$

Applying L' Hospital rule.

$$\underset{x\to 0}{\text{Lt}} \frac{2xe^{x^2}+\sin x}{2x} = \underset{x\to 0}{\text{Lt}}\left(e^{x^2}+\frac{\sin x}{2x}\right)$$

$$=1+\frac{1}{2}=\frac{3}{2}$$

03. Ans: (a)

Sol: $f(x) = 8x - x^2$ in [0,8]

$$C = \frac{0+8}{2} = 4$$

Since, the value of 'C' for $px^2 + qx + r$ (irrespective of p,q,r) defined in [a,b] using mean value theorem is mid point of the interval i.e $C = \dfrac{a+b}{2}$

04. Ans: (c)

Sol: $\displaystyle\int_0^{\frac{\pi}{2}} \min\{\sin x, \cos x\}dx = \int_0^{\frac{\pi}{4}} \sin x dx + \int_{\frac{\pi}{4}}^{\frac{\pi}{2}} \cos x\, dx$ .....(1)

Since in $[0, \frac{\pi}{4}]$, min (sin x , cos x) = sin x

in $[\frac{\pi}{4}, \frac{\pi}{2}]$, min (sin x , cos x) = cos x

$$(1) \Rightarrow \int_0^{\frac{\pi}{2}} \min(\sin x, \cos x)dx = (-\cos x)_0^{\frac{\pi}{4}} + (\sin x)_{\frac{\pi}{4}}^{\frac{\pi}{2}}$$

$$= -\cos\frac{\pi}{4} + \cos 0 + \sin\frac{\pi}{2} - \sin\frac{\pi}{4}$$

$$= -\frac{1}{\sqrt{2}} + 1 + 1 - \frac{1}{\sqrt{2}}$$

$$= 2 - \sqrt{2}$$

05. Ans: (b)

Sol: f (x,y) = cos (xy) + x cos y

$f_x(x,y) = -y \sin(xy) + \cos y$

$$f_x(2, \frac{\pi}{2}) = -\frac{\pi}{2}\sin(\pi) + \cos\frac{\pi}{2} = 0$$

$f_y(x,y) = -x \sin(xy) - x \sin y$

$$f_y(2, \frac{\pi}{2}) = -2\sin(\pi) - 2\sin\frac{\pi}{2} = -2$$

$$\therefore\ f_x(2, \frac{\pi}{2}) + f_y(2, \frac{\pi}{2}) = -2$$

06. Ans: (a)

Sol: $\displaystyle\int_{-1}^{1} \frac{x^9}{x^4+2|x|+1}dx = 0$

Since $\dfrac{x^9}{x^4+2|x|+1}$ is an odd function

Scanned with CamScanner

07. Ans: (b)

Sol: $f(x)=\sqrt{x}$ in (a,b) & c = 1 from the mean value theorem

$$f^1(c)=\frac{f(b)-f(0)}{b-0}$$

$$\frac{1}{2\sqrt{c}}=\frac{\sqrt{b}}{b}=\frac{1}{\sqrt{b}}$$

$$\Rightarrow \sqrt{b}=2\sqrt{c}=2$$

$$\Rightarrow b=4$$

08. Ans: (a)

Sol: $$\int_{\frac{3\pi}{4}}^{\frac{4\pi}{3}}\frac{\sin x\cos x}{|\cos x|}dx=\int_{\frac{3\pi}{4}}^{\frac{4\pi}{3}}\frac{\sin x\cos x}{-\cos x}dx$$

$$=[\cos x]_{\frac{3\pi}{4}}^{\frac{4\pi}{3}}=\cos\left(\frac{4\pi}{3}\right)-\cos\left(\frac{3\pi}{4}\right)$$

$$=-\cos\frac{\pi}{3}+\sin\frac{\pi}{4}$$

$$=-\frac{1}{2}+\frac{1}{\sqrt{2}}$$

$$=\frac{2-\sqrt{2}}{2\sqrt{2}}$$

$$=\frac{\sqrt{2}-1}{2}=\frac{K}{2}\text{(Given)}$$

$$\therefore\ K=\sqrt{2}-1$$

09. Ans: (c)

Sol: $f(x,y)=\alpha x^2+xy+\beta y^2$

$$p=f_x=2\alpha x+y, q=f_y=x+2\beta y$$

$$r=f_{xx}=2\alpha, t=f_{yy}=2\beta, s=1$$

(0,0) is the stationary point given

At (0,0) for maxima $rt-s^2>0$ & $r<0$

$4\alpha\beta-1>0$ & $2\alpha<0$

$\Rightarrow 4\alpha\beta>1$ & $2\alpha<0$

$\Rightarrow 4\alpha\beta>1$ & $\alpha<0$

10. Ans: (a)

Sol: $f(x)=2x^3-3x^2-12x+1$ on $[-2,\frac{5}{2}]$

$$f^1(x)=0$$

$$\Rightarrow 6x^2-6x-12=0$$

$$\Rightarrow\quad x^2-x-2=0$$

$\Rightarrow x=-1,2$ are stationary points

$$f(-2)=-16-12+24+1=-3$$

$$f(\frac{5}{2})=\frac{125}{4}-\frac{75}{4}-30+1$$

$$=\frac{50}{4}-29=\frac{50-116}{4}=-16.5$$

$$f(-1)=-2-3+12+1=8$$

$$f(2)=16-12-24+1=-19$$

$$f_{min}=-19\ \&\ f_{max}=8$$

11. Ans: 0 (Zero)

Sol: $f(x)=\sin|x|+\cos|x|$

$$\frac{df}{dx}=\frac{|x|\cos|x|}{x}-\frac{|x|\sin|x|}{x}$$

$$=\frac{|x|}{x}\{\cos|x|-\sin|x|\}\rightarrow(1)$$

at $x=\frac{-\pi}{4}$, $|x|=\frac{\pi}{4}$

$$\cos|x|=\cos\frac{\pi}{4}=\frac{1}{\sqrt{2}}$$

$$\sin|x|=\sin\frac{\pi}{4}=\frac{1}{\sqrt{2}}$$

Scanned with CamScanner

$$(1) \Rightarrow \frac{df}{dx} = \frac{\frac{\pi}{4}}{\frac{-\pi}{4}}\left\{\frac{1}{\sqrt{2}} - \frac{1}{\sqrt{2}}\right\} = 0$$

12. Ans: (c)

13. Ans: (b)

Sol: $f(x) = \left(\frac{1}{x}\right)^{2x^2}$

$$\ln f(x) = \ln\left(\frac{1}{x}\right)^{2x^2} = -2x^2 \ln x$$

$$\frac{f^1(x)}{f(x)} = (-4x\ln x - 2x)$$

$$\Rightarrow f^1(x) = (-4x\ln x - 2x)\, f(x) = 0$$

$$\Rightarrow \quad -4x\ln x - 2x = 0$$

$$\Rightarrow -2x\{1+2\ln x\} = 0 \Rightarrow 2\ln x = -1$$

$$\Rightarrow \ln x = \frac{-1}{2}$$

$$\Rightarrow x = e^{\frac{-1}{2}}$$

$$\Rightarrow x = \frac{1}{\sqrt{e}}$$

$$f_{max} = \left\{\frac{1}{\frac{1}{\sqrt{e}}}\right\}^{2\left(\frac{1}{\sqrt{e}}\right)^2} = e^{\frac{1}{e}}$$

14. Ans: (a)

Sol: Let $f(u) = \tan^{-1} u = [xy(x+y)] = x^2y + xy^2$ is a homogeneous function of degree 3

By Euler's theorem

$$xu_x + yu_y = n\frac{f(u)}{f^1(u)} = \frac{3\tan^{-1} u}{\frac{1}{1+u^2}} = 3(1+u^2)\tan^{-1} u$$

$$= 3xy\,(x+y)\,\{1+\tan^2[xy\,(x+y)]\}$$

$$= 3xy\,(x+y)\sec^2[xy\,(x+y)]$$

15. Ans: (b)

Sol: put $x^3 = t \Rightarrow x = t^{\frac{1}{3}} \Rightarrow x^2 = t^{\frac{2}{3}} \Rightarrow x^6 = t^2$

$$dx = \frac{1}{3}t^{\frac{-2}{3}}dt$$

If $x = 0, t = 0$

If $x = 1, t = 1$

$$\int_0^1 \frac{x^2dx}{\sqrt{1+x^6}} = \int_0^1 \frac{t^{\frac{2}{3}}\frac{1}{3}t^{\frac{-2}{3}}dt}{\sqrt{1+t^2}} = \frac{1}{3}\int_0^1 \frac{dt}{\sqrt{1+t^2}}$$

$$= \frac{1}{3}\left\{\log\left(t+\sqrt{1+t^2}\right)\right\}_0^1$$

$$= \frac{1}{3}\log\left(1+\sqrt{2}\right)$$

16. Ans: (c)

Sol: $f^1(c) = f(1) - 5$

$$e^c = f(1) - 5 \;\ldots\ldots\; (1)$$

$$0 < c < 1 \Rightarrow 1 < e^c < e$$

$$\Rightarrow 1 < f(1) - 5 < e$$

$$\Rightarrow 6 < f(1) < 7.718$$

17. Ans: 2

Sol: $\underset{x\to 0}{Lt}\left[\frac{2x^2-3x+4}{x} + \frac{5x-4}{x}\right] = \underset{x\to 0}{Lt}\left[\frac{2x^2+2x}{x}\right]$

$$= \underset{x\to 0}{Lt}(2x+2) = 2$$

Scanned with CamScanner

18. Ans: (d)

Sol: $\underset{x\to 3}{\text{Lt}} \frac{|4x-12|}{x-3} = \underset{x\to 3}{\text{Lt}} \frac{4|x-3|}{(x-3)} \left(\frac{0}{0}\text{form}\right)$

Applying L' Hospital rule

$\underset{x\to 3}{\text{Lt}} \frac{|4x-12|}{x-3} = 4 \underset{x\to 3}{\text{Lt}} \frac{|x-3|}{(x-3)} \left(\frac{0}{0}\text{form}\right)$

It repeats continuously, so $\underset{x\to 3}{\text{Lt}} \frac{|4x-3|}{x-3}$ does not exist

So option (d) is correct

19. Ans: (a)

Sol: for continuity,

$\underset{x\to a^-}{\text{Lt}} f(x) = \underset{x\to a^+}{\text{Lt}} f(x) = f(a)$

$\Rightarrow a^2 + 2a = -1$

$\Rightarrow (a+1)^2 = 0$

$\Rightarrow a = -1$

20. Ans: (a)

Sol: $\underset{x\to 0}{\text{Lt}} \frac{x-\tan x}{x^3} = \frac{0}{0}\text{form}$

Applying L' Hospital rule

$\underset{x\to 0}{\text{Lt}} \frac{x-\tan x}{x^3} = \underset{x\to 0}{\text{Lt}} \frac{1-\sec^2 x}{3x^2} \quad \left(\frac{0}{0}\text{form}\right)$

$= \underset{x\to 0}{\text{Lt}} \frac{-2\sec^2 x \tan x}{6x}$

$= \frac{-2}{6}\sec^2(0)\times 1 \left(\because \underset{x\to 0}{\text{Lt}} \frac{\tan x}{x} = 1\right)$

$= -\frac{1}{3}$

Another method

$\underset{x\to 0}{\text{Lt}} \frac{x-\tan x}{x^3} = \underset{x\to 0}{\text{Lt}} \frac{x-(x+\frac{x^3}{3}+\frac{2x^5}{15}+.....)}{x^3}$

$= \underset{x\to 0}{\text{Lt}} -\frac{1}{3} - \frac{2x^2}{15}.....$

$= -\frac{1}{3}$

21. Ans: (c)

Sol: $\underset{x\to 0}{\text{Lt}} \left(\frac{1}{x}\right)^{1-\cos x} = y$ (say)

Taking logarithms both sides, we get

$\underset{x\to 0}{\text{Lt}} \log\left(\frac{1}{x}\right)^{1-\cos x} = \log y$

$\Rightarrow \underset{x\to 0}{\text{Lt}} (1-\cos x)\log\left(\frac{1}{x}\right) = \log y$

$\underset{x\to 0}{\text{Lt}} (\cos x - 1)\log x = \log y$

$\left(\because \log\left(\frac{1}{x}\right) = \log 1 - \log x = -\log x\right)$

$\Rightarrow \underset{x\to 0}{\text{Lt}} \frac{\log x}{\frac{1}{\cos x - 1}} = \log y$

$\Rightarrow \underset{x\to 0}{\text{Lt}} \frac{\frac{1}{x}}{\frac{-1\times -\sin x}{(\cos x-1)^2}} = \log y$

$\Rightarrow \underset{x\to 0}{\text{Lt}} \frac{(\cos x-1)^2}{x\sin x} = \log y$

$\Rightarrow \underset{x\to 0}{\text{Lt}} \frac{-2\sin x(\cos x-1)}{x\cos x+\sin x} = \log y$

$\Rightarrow \underset{x\to 0}{\text{Lt}} \frac{2\sin^2 x - 2\cos x(\cos x-1)}{-x\sin x+2\cos x} = \log y$

Scanned with CamScanner

$$\Rightarrow 0 = \log y$$

$$\Rightarrow y = e^0 = 1$$

$$\Rightarrow \underset{x\to 0}{\text{Lt}} \left(\frac{1}{x}\right)^{1-\cos x} = 1$$

22. Ans: (a)

Sol: for continuity $\underset{x\to 0}{\text{Lt}} f(x) = f(0) = 0$

$\therefore$ f(x) is continuous at x = 0

for differentiability: $f'(0) = \underset{x\to 0}{\text{Lt}} \dfrac{f(x)-f(0)}{x-0}$

$$= \underset{x\to 0}{\text{Lt}}\, x\sin\left(\frac{1}{x}\right) = 0$$

$\therefore$ f(x) is differentiable at x = 0

23. Ans: (c)

Sol: $f(x) = \dfrac{\log x - \log 5}{x-5}, \quad x \neq 0$

f(x) is continuous function at x = 5 then

$$\underset{x\to 5}{\text{Lt}} f(x) = f(5)$$

$$\underset{x\to 5}{\text{Lt}} \frac{\log x - \log 5}{x-5} = f(5)$$

Applying L Hospital rule

$$\underset{x\to 5}{\text{Lt}} \frac{1}{x} = f(5) \Rightarrow f(5) = \frac{1}{5}$$

Scanned with CamScanner

Computer Organization

Scanned with CamScanner

Chapter 1 Computer Arithmetic

01. Booth's multiplication gives worst case performance if the multiplier pattern is
(a) 0111110 (b) 000001
(c) 010101 (d) 11111

02. Suppose the largest n-bit binary number requires 'd' digits in decimal representing which of the following relations hold between 'n' & 'd' approximately
(a) $d = 2^n$ (b) $n = 2^d$
(c) $d < \log_{10} 2$ (d) $d > n \log_{10} 2$

03. What is the value of the following number if it is represented in IEEE 754 floating point format.

Sign	Exponent	Mantissa
1	00101111	100.....0
1 bit	8 bits	23 bits

(a) -1.5×10^{-24} (b) 1.1×10^{-32}
(c) -1.5×10^{-39} (d) none

04. The format for IBM 360 / 370, 32-bit floating point number as shown below

S	exponent	mantissa
1 bit	7	24

$N = (-1)^s 16^{E-64}(0.M)$ contents of various fields for storing – 7.5
(a) S = 1, exponent = $(65)_{10}$, Mantissa $(0.76)_{16}$
(b) S = 1, exponent = $(66)_{10}$, Mantissa $(0.68)_{16}$
(c) S = 1, exponent = $(65)_{10}$, Mantissa $(0.78)_{16}$
(d) None of these

05. $(314)_7 + (465)_7 = (X)_{10}$, X=?
(a) 779 (b) 1112
(c) 401 (d) 583

06. The condition for overflow in the addition of two 2's complement numbers in terms of the carry generated by the two most significant bits is
(a) $X_s Y_s C_{in\,MSB} + \overline{X}_s \overline{Y}_s \overline{C}_{in\,MSB}$
(b) $\overline{X}_s \overline{Y}_s C_{in\,MSB} + X_s Y_s \overline{C}_{in\,MSB}$
(c) $X_s Y_s C_{in\,MSB} + \overline{X}_s \overline{Y}_s C_{in\,MSB}$
(d) $X_s Y_s \overline{C}_{in\,MSB} + \overline{X}_s \overline{Y}_s \overline{C}_{in\,MSB}$

07. Given a positive number 'N' in base 'r' with an integer part of 'n' digits and a fraction part of 'm' digits, the (r–1)'s complement of 'N' is defined as
(a) $r^n - N - 1$ (b) $r^n - N - m$
(c) $r^n - r^{-m} - N$ (d) $r^n - r^m - N$

08. If 73_x (in base-x number system) is equal to 54_y(in base-y number system), the possible values of x and y are
(a) 8, 16 (b) 10, 12
(c) 9, 13 (d) 8, 11

Scanned with CamScanner

09. Let $12A7C_{16} = X_8$. The value of X is

(a) 224174 (b) 425174

(c) 6173 (d) 225174

10. A 32-bit floating point number is represented by a 7-bit signed exponent and a 24-bit fractional mantissa. The base of the scale factor is 16,

I. The range of the exponent is _____

II. The range of the exponent is_____, if the scale factor is represented in excess-64 format.

(a) I. 2^{-64} to 2^{63}, II. 16^{-64} to 16^{63}

(b) I. 16^{-64} to 16^{63}, II. 16^{-64} to 16^{63}

(c) I. 16^{-64} to 16^{63}, II. 64^{-64} to 64^{63}

(d) none of these

Data for Q11 and Q12 are given below. Solve the problems and choose correct answer.

Consider the following 32 bit floating point representation scheme as shown in the format below. A value is specified by 3 fields, a one bit sign field (with 0 for positive and 1 for negative values), a 24 bit fraction field (with the binary point being at the left end of the fraction bits) and a 7 bit exponent field (in excess-64 signed integer representation, with 16 being the base of exponentiation). The sign bit is the most significant bit.

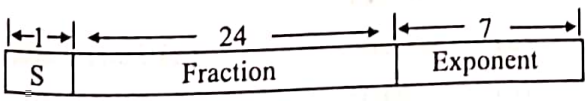

11. It is required to represent the decimal value –7.5 as a normalized floating point number in the given format. Derive the values of the fields S, F and Ex.

(a) S=1,

F=011010000000000...(upto 24 bits),

Ex=1000011

(b) S=1,

F=011110000000000.....(upto 24 bits),

Ex=1000001

(c) S=1,

F=0110100000000000 (upto24bits)

Ex=1000001

12. Express the above final answer in hexadecimal (32 bits)

(a) 1780008C (b) ACDE0043

(c) BC000041 (d) BC000083

13. $(2\ 1\ 2\ 0\ 1\ 2\ 2\ \ 1\ 1\ 2\ 1\ 0\ 0\ 1\ 2)_3 = (X)_9$.

The value of X is

(a) 7 6 5 7 5 3 1 6 (b) 2 5 1 8 4 7 0 5

(c) 6 7 3 2 1 5 1 6 (d) 2 7 6 3 1 7 0 5

14. The Number –43 in 2's complement representation is

(a) 1 1 0 1 0 1 0 1 (b) 0 0 1 0 1 0 1 1

(c) 1 1 1 0 0 1 0 1 (d) none of these

15. Transmitter & receiver use Hamming code for error detection & correction. The 7–bit message + code is received as $(177)_8$. Identify the *correct* statement.

Scanned with CamScanner

(a) The message is having single bit error at 2nd position.
(b) Code is having single bit error.
(c) 3rd message bit is to be complemented for correcting errors.
(d)There is no error either in message or code

16. Consider the following floating point representation

31 — 24	23 — 0
Exponent	Mantissa

Exponent is in 2's complement number and mantissa is in sign magnitude normalized fraction. Range of the mantissa is

(a) 10 to 1
(b) 0.5 to $1-2^{-24}$
(c) 2^{-23} to 1
(d) 2^{-23} to 2^{23}

Statement for Linked answer Q17 and Q18 is given below.

Consider the following floating point format.

15	14 — 8	7 — 0
Sign Bit	Excess–64 Exponent	Mantissa

Mantissa is a pure fraction in sign-magnitude form.

17. The decimal number 0.239×2^{13} has the following hexadecimal representation (Without normalization and rounding off) :

(a) 0D 24
(b) 0D 4D
(c) 4D 0D
(d) 4D 3D

18. The normalized representation for the above format is specified as follows. The mantissa has an implicit 1 preceding the binary (radix) point. Assume that only 0's are padded in while shifting a field.

The normalized representation of the above number (0.239×2^{13}) is:

(a) 0A 20
(b) 11 34
(c) 49 D0
(d) 4A E8

19. A floating point number is denoted by following 16-bit register where both mantissa and exponent f fixed point signed integers which are denoted by 2's complement representation, the base of the system is 2

Mantissa	Exponent

If the content of register is FFFF then the value of the stored number is

(a) –1
(b) – 2
(c) –1.5
(d) data insufficient

20. Find the values of 'y' and 'x' if the following simultaneous expressions are solved

$(7x\ 3\ 5)_8 - (5\ 6\ y\ 3)_8 = (x\ 3\ x\ y)_8$

(a) 1, 2
(b) 2, 1
(c) 1, 3
(d) 3, 1

21. Let A = 11111010, B = 00001010 be two 8 bit complement numbers. The product in 2's complement is

(a) 1100 0100
(b) 1001 1100
(c) 1010 0101
(d) 11010101

Scanned with CamScanner

22. The range of integers which can be represented by n bit 2's complement number system is

(a) $-(2^{n-1}+1)$ to $(2^{n-1}-1)$

(b) $-(2^{n-1}-1)$ to $(2^{n-1}-1)$

(c) -2^{n-1} to 2^{n-1}

(d) -2^{n-1} to $(2^{n-1}-1)$

For Question No.23 there are two statements Assertion (A) and Reason (R). Choose:

(a) Both (A) and (R) are true and (R) is not the correct reason for (A).

(b) Both (A) and (R) are true and (R) is not the correct reason for (A).

(c) Both (A) and (R) are false.

(d) (A) is true but (R) is false.

23. **Assertion (A):** 2's complement arithmetic is faster compare to 1's complement arithmetic.

Reason (R): The 2's complement representation is weighted code while 1's complement is non-weighted code.

24. The following bit pattern represents a floating point number in IEEE single precision format. 1 10000011 10100.....0

The decimal equivalent value of the above in IEEE754?

(a) –13 (b) –26

(c) –10 (d) –21

25. The following is a scheme for floating point number representations using 16 bits:

s (1)	e (6)	m (9)

Let s, e, and m be the numbers represented in binary in the sign, exponent, and mantissa fields respectively. Then the floating point number represented is

$(-1)^s (1 + m \times 2^{-9})\, 2^{e-31}$,

if the exponent $\neq$ 111111.

0, otherwise

What is the maximum difference between two successive real numbers representable in this system?

(a) 2^{-40} (b) 2^{-9}

(c) 2^{22} (d) 2^{31}

26. A new floating point representation is proposed so that implicit normalization to the mantissa and biased exponent. The representation is similar to that of IEEE 754 format i.e., Bias = $(2^{k-1} - 1)$ because it is used to represent $\pm 0, \pm \infty$. Let 4 bit biased exponent and, 7–bit mantissa is placed in 12 bit register as shown below.

S	E (4)	M

Which of the following pattern denote the value 14.25?

(a) 01010 1100100 (b) 01110 01 00000

(c) 01010 1110010 (d) 111 001 00 0000

Scanned with CamScanner

27. Which of the following multiplier gives good performance with Booths Algorithm?
(a) 01100111001 (b) 00111011101
(c) 11111001111 (d) 111000111011

28. What is 8-digit hexa decimal pattern which decimal $(16)_{16}$ in IEEE 754 floating point, standard with single precision.
(a) $(41000000)_H$ (b) $(41800000)_H$
(c) $(41B\ 0000)_H$ (d) $(423\ 00000)_H$

29. Consider the following:
1. Input device
2. Arithmetic and logic unit
3. Control unit
4. Auxiliary memory
5. Main memory
6. Active hub

Which of these form part of CPU?
(a) 1, 4 and 6 (b) 2 and 3
(c) 2, 4 and 5 (d) 2, 3 and 5

30. **Assertion (A):** There is no overflow after an addition, if one number is positive and the other is negative
Reason (R): Adding a positive number to a negative number always produces a result which is smaller than the larger of the two.
(a) Both A and R are individually true and R is the correct explanation of A
(b) Both A and R are individually true but R is not the correct explanation of A
(c) A is true but R is false
(d) A is false but R is true

Scanned with CamScanner

Solutions

01. Ans: (c)

Sol: It needs more number of Add/Subtract operations.

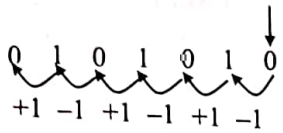

Total operations needed = 6

02. Ans: (d)

Sol: $(\ldots\ldots n \text{ bits})_2 = (\ldots\ldots\ldots\ldots d \text{ bits})_{10}$

$\Rightarrow 10^d > 2^n$

$\Rightarrow d > n \log_{10} 2$

03. Ans: (a)

Sol:

Sign	Exponent	Mantissa
1	00101111	100.....0
1 bit	8 bits	23 bits

Value $= (-1)^S (1.M)_2\, 2^{E-\text{Bias}}$

Bias $= 2^{K-1} - 1 = 2^{8-1} - 1$

$= 2^7 - 1 = 127$

$= (-1)^1 (1.1)_2\, 2^{47-127}$

$= (-1)(1.1)_2\, 2^{-80}$

$= -(1.1)_2 \times 2^{-80}$

$= (-)1.5 \times 10^{-24}$

$2^{-80} < 10^d \Rightarrow d > -80 \log_{10} 2$

$d = -24$

$= (-1).(1.5)_{10}.\, 10^{-24}$

$= -1.5 \times 10^{-24}$

04. Ans: (c)

Sol: $N = (-1)^S\, 16^{E-64}\, (0.M)$

for storing $(-7.5)_{10} \Rightarrow S = 1$

$(7.5)_{10} = (7.8)_{16}$

$= (0.78)_{16} \times 16^1$

$\Rightarrow M = (0.78)_{16} \times 16^1$

$= 16^{E-64}$

$\Rightarrow E = 65$

$\therefore S = 1$, exponent $= (65)_{10}$,

Mantissa $= (0.78)_{16}$

05. Ans : (c)

Sol: $(7^2\times3+7\times1+4)+(7^2\times4+7\times6+5)=158+243$

$= (401)_{10}$

06. Ans: (b)

07. Ans : (c)

Sol: General formula for calculating (r − 1)'s complement of N

$r^n - (N + r^{-m}) = r^n - r^{-m} - N$

with base r having n bits & m fraction bits.

08. Ans : (d)

Sol: $7x + 3 = 5y + 4$

$7x - 5y = +1$

only x = 8 and y = 11 gives correct

09. Ans : (d)

Sol: $(12A7C)_{16} = X_8$

$00|010|010|101|001|111|100_2 = X_8$

2 2 5 1 7 4

Scanned with CamScanner

10. Ans : (b)

Sol: 7 bit signed mantissa

Range is from –64 to + 63

$\therefore$ with Base 16; it's range is 16^{-64} to 16^{63}

Whatever the biasing value, there is no change in Exponent range.

11. Ans : (b)

Sol: $-7.5_{10} = -7.8H = -0.78 \times 16^1$

M = 0.78H

e = 64 + 1 = 65 = 1000001

M = 011110000.....

12. Ans : (c)

Sol:

S	M
1	01111000000000000000000001000001

$(BC000041)_H$

13. Ans: (b)

Sol: $(2|1\ 2|0\ 1|22|11|21|00|12)_3 = (X)_9$

2 | 5 | 1 | 8 | 4 | 7 | 0 | 5

$= (2\ 5\ 1\ 8\ 4\ 7\ 0\ 5)_9$

14. Ans: (a)

Sol:

–128	64	32	16	8	4	2	1
1	1	0	1	0	1	0	1

15. Ans: (d)

Sol: Information size = 7 bit = $(177)_8$

$= (1111\ 111)_2$

$= |P_1|\ P_2\ |\ D_3\ |\ P_4\ |\ D_5|D_6|D_7$

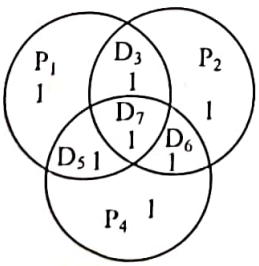

$P_1 = 1 + 1 + 1 + 1 =$ No error

$P_2 = 1 + 1 + 1 + 1 =$ No error

$P_3 = 1 + 1 + 1 + 1 =$ No error

16. Ans: (b)

Sol: Normalized Mantissa range is from

0.1000.....0(24) to 0.1111.....1(24)

$= 0.5$ to $(1 - 2^{-24})$

17. Ans: (d)

Sol: $0.239 \times 2^{13} = 0.00111101_2 \times 2^{13}$

$0.239 \times 2 - 0$
$0.478 \times 2 - 0$
$0.956 \times 2 - 1$
$0.912 \times 2 - 1$
$0.824 \times 2 - 1$
$0.648 \times 2 - 1$
$0.296 \times 2 - 0$
$0.592 \times 2 - 1$
0.184

e = 13
b = 64
E = e + b
= 77 = 1001101
M = 00111101

0	1001101	00111101
S	E	M

$= (4D3D)_H$

18. Ans: (d)

Sol: 0.00111101×2^{13} Non Normalized

1.11101×2^{10} implicit Normalized

M = 11101000, e = 10, E = 74 = 1001010

0	1001010	11101000
S	E	M

$(4AE8)_H$

19. Ans: (d)

20. Ans: (a)

Scanned with CamScanner

21. Ans: (a)

22. Ans: (d)

23. Ans: (b)

24. Ans: (b)

Sol:

$$\underset{\text{Sign}}{1}\ \underbrace{1\,0\,0\,0\,0\,0\,1\,1}_{\text{Biased Exponent}}\ \underbrace{1\,0\,1\,0\,0\ldots\ldots\ldots\ldots 0}_{\text{Mantissa}}$$

→ It uses implicit Normalization

$= (-)\ 1.10100 \times 2^{131-127}$

$= (-)\ 1.1010 \times 2^{4}$

$= (-)\ 11010 \times 2^{0}$

$= -26$

25. Ans: (c)

Sol: Let first number is 15 then 2nd number will be 16

Max difference is

$((-1)^s(1+16\times2^{-9})\times(2^{e-31}))$

$\quad - ((-1)^s(1+15\times2^{-9})\times2^{e-31})$

$= (2^{e-31}+2^{e-31}\times2^{-9}\times16) - (2^{e-31}-2^{e-31}\times2^{-9}\times15)$

$= 2^{e-31}\times2^{-9}(16-15)$

$= 2^{e-31}\times2^{-9}$

Max 'e' value is 62

$\therefore$ Max difference $= 2^{62-31}\times 2^{-9} = 2^{22}$

26. Ans: (a)

Sol: Biasing Amount $= 2^{4-1} - 1 = 7$

$14.25 = 1110.01 \times 2^{0}$

Implicit Normalization form is 1.11001×2^{3}

M = 11001, E = 3+7 = 10 = 1010_2

Sign = 0

0	1010	1100100

12 bit

27. Ans: (c)

Sol: It needs less number of operations.

28. Ans: (c)

Sol: 16 H = 00010110×2^{0}

$= 1.0110 \times 2^{4}$

e = 127 + 4 = 131 = 10000011 (8)

M = 0110000……0(23)

S = 0

32

0100	0001	1011	0000	00……0
S 4	E 1	B	0	M 000

$(4\ 1\ B\ 0\ 0\ 0\ 0)_H$

29. Ans: (b)

Sol: CPU consists two parts

(i) Control Unit

(ii) Arithmetic Logic Unit

30. Ans: (a)

Sol: For example addition of 6 & –7 will always be in between 6 and –7. So answer of addition will never go beyond register capacity.

Scanned with CamScanner

Chapter 2 Memory Organization

01. A computer has 4 K word cache with 4-way set associative with 64 words/block, the number of bits in set and word field are
(a) 15, 4 (b) 4, 6
(c) 6, 4 (d) 4, 12

02. Let the Cache and main memory divided into equalized partitions having 16 words. If cache has 256 blocks & main memory has 4096 blocks and Cache is 4–way set associative then number of Tag bits = _____.
(a) 5 (b) 6 (c) 7 (d) 9

03. In a cache organized memory there exists 30% of compulsory misses, 10% capacity misses, 12% conflict misses. If cache is fully associative. Find the average access time (t_c = 10 ns, t_m = 100 ns)
(a) 10 ns (b) 40 ns (c) 50 ns (d) 62 ns

04. Which of the following memory organizations use better performance?
(a) 16 MB non interleaved memory
(b) 32 MB non interleaved memory
(c) 16 MB with 2 way interleaving
(d) 32 MB with 2 way interleaving

05. By increasing the size of page the performance of cache increases due to
(a) Exploiting spatial locality
(b) Exploiting temporal locality
(c) Exploiting both (a) and (b)
(d) Reducing conflict miss page fault

For Question 06 there are two statements Assertion (a) and Reason (r).
Choose
(a) Both (a) and (r) are true and (r) is the correct reason for (a).
(b) Both (a) and (r) are true but (r) is not the correct reason for (a).
(c) Both (a) and (r) are false.
(d) (a) is true but (r) is false.

06. **Assertion[a]:** Under paged memory management scheme, simple lock and key memory protection arrangement is required
Reason[r]: if the Input / output processors do not have address mapping hardware.

07. A block–set associative Cache memory consists of 128 blocks divided into four block sets. The main memory consists of 16,384 blocks and each block contains 256 eight-bit words. How many bits are needed to represent the TAG, SET and WORD fields respectively?
(a) 8, 8, 8 (b) 6, 6, 6
(c) 9, 5, 8 (d) 8, 6, 8

Data for Q08 and Q09 are given below. Solve the problems and choose correct answer

A CPU has 32–bit memory address and a 256 KB Cache memory. The Cache is organized as a 4–way set associative Cache with Cache block size of 16 bytes

Scanned with CamScanner

08. What is the size (in bits) of the tag field per Cache block?
(a) 16 bits (b) 9 bits
(c) 19 bits (d) 12 bits

09. From the above question, What is the number and size of the comparator required for tag matching?
(a) four 4–bit comparators
(b) 16 16–bit comparators
(c) four 16–bit comparators
(d) one 4-bit comparator

10. In a 4-way set associative cache the number of words in any cache block is 256. Number of blocks is equals to block size, if tag bits are 4 the size of Physical memory is
(a) 10 K words (b) 1000 K words
(c) 256 K words (d) 512 K words

11. Match the following:
List – I
(P) Cache memory
(Q) Disk memory
(R) Associate memory
(S) Dynamic RAM

List – II
(1) More packing density
(2) Virtual memory
(3) Maintains frequently used information
(4) Fastest memory with parallel comparison

Codes:
(a) P – 1, Q – 2, R – 3, S – 4
(b) P – 4, Q – 2, R – 1, S – 3
(c) P – 3, Q – 2, R – 4, S – 1
(d) P – 3, Q – 2, R – 1, S – 4

12. In 2 – level memory the average access time is 40 ns with level 1 and 150 ns without level 1, the level 1 access time 30 ns hit ratio (approximately). Assume only level 1 is having access to CPU.
(a) 83 % (b) 93 %
(c) 73 % (d) 53 %

13. Which of the following cache gives better performance?
(a) 256 KB 4–way set associative
(b) 16 KB 4–way set associative
(c) 256 KB 8–way set associative
(d) 16 KB 8–way set associative

14. Which of the following statement is ***correct*** with respect to the no. of tag bits.
I. Direct mapping
II. Fully Associative mapping
III. Set associative mapping

(a) I < II < III (b) I < III < II
(c) II < I < III (d) none of the above

Common Data for Q15 & Q16 is given below.

Cache and main memory system has following specifications:

Cache block size	= 16 words
set size	= 2 blocks
number of sets	= 128
number of bits in a word	= 32 bits
Cache access time (T_C)	= 20 ns
Memory access time (T_m)	= 120 ns
(hit) h	= 0.8
Main memory physical address	= 21 bits

Scanned with CamScanner

15. What is the total Cache size needed?
(a) (16 k + 140) bytes
(b) (16 k + 320) bytes
(c) (256 k + 180) bytes
(d) (60 k + 300) bytes

16. What is the hit ratio, if average access time is increased by 40 ns?
(a) remains same i.e h = 0.8 (b) h = 0.921
(c) h = 0.467 (d) h = 0.592

17. The 8 million word main memory and cache are partitioned into 16 word blocks, the number of Tag bits in associative mapping is
(a) 20 (b) 19
(c) 14 (d) data is insufficient

18. A 64 word cache and 256 word main memory is partitioned into 16 word blocks. The tag information is shown below:

Block	Tag
0	10
1	10
2	00
3	01

Identify the ***correct*** statements with respect to the availability of main memory words in the cache
(a) The words 50 and 132 are available in the cache
(b) The words 150 and 132 are available in the cache
(c) The words 178 and 150 are available in the cache
(d) The words 35 and 50 are available in the cache

19. Consider a fully associative cache blocks (numbered 0-7) and the following sequence of main memory blocks of references are made
4,3,25,8,19,6,25,8,16,35,45,22,8,3,16,25,7
If LRU replacement policy is used, which cache block will have memory block 7?
(a) 4 (b) 5 (c) 6 (d) 7

For Question No. 20 there are two statements Assertion (a) and Reason (r).

Choose
(a) Both (a) & (r) are true and (r) is the correct explanation for (a).
(b) Both (a) & (r) are true and (r) is not the correct explanation for (a).
(c) (a) is true and (r) is false.
(d) (a) and (r) are false.

20. **Assertion(a):** 16 MB, 8–way set associative cache is better than 32 MB direct mapped cache.
Reason (r): Conflict penalty is less in set associative mapping.

21. Consider a 2–way set associative cache memory with 4 sets and total 8 cache blocks (0 – 7) and a main memory with 128 blocks (0–127). Which memory blocks will be present in the cache after the following sequence of memory block references if LRU policy is used for cache block replacement. Assuming that initially the cache did not have any memory block from the current job?
0 5 3 9 7 0 16 55

Scanned with CamScanner

(a) 0 3 5 7 16 55
(b) 0 3 5 7 9 16 55
(c) 0 5 7 9 16 55
(d) 3 5 7 9 16 55

22. A computer system has a level-1 instruction cache (I-cache), a level-1 data cache (D–cache) and a level-2 cache (L2-cache) with the following specifications:

	Capacity	Mapping method	Block size
I-cache	4K words	Direct Mapping	4 words
D-cache	4K words	2-way set-associative Mapping	4 words
L2-cache	64K words	4-way set-associative Mapping	16 words

The length of the physical address of a word in the main memory is 30 bits. The capacity of the tag memory in the I-cache, D-cache and L2- cache is, respectively,

(a) 1K × 18-bit, 1K × 19-bit, 4 K × 16-bit
(b) 1K × 16-bit, 1K × 19-bit, 4 K × 18-bit
(c) 1K × 16-bit, 512 × 18-bit, 1 K × 16-bit
(d) 1K × 18-bit, 512 × 18-bit, 1 K × 18-bit

23. The basic cells used to build the main memory unit and cache memory unit respectively are
(a) S RAM, S RAM
(b) S RAM, D RAM
(c) D RAM, S RAM
(d) D RAM, D RAM

24. A CPU has 32-bit memory address and a 256 KB cache memory. The cache is organized as a 4-way set associative cache with cache block size of 16 bytes.
What will be the number of bits in the TAG, SET, BYTE offset fields?
(a) 10, 18, 4 (b) 11, 17, 4
(c) 16, 12, 4 (d) 17, 11, 4

25. How many memory chips of 2 K ×4 bits are required to construct 1 M ×8 bit memory?
(a) 1023 (b) 1024
(c) 8096 (d) 16192

26. A certain memory has three levels with the hit ratios as .8, .9 and 1.0. The total number of memory references to Level 1 & Level 3 memories made by 800 instruction program is
(a) 0, 800 (b) 640, 144
(c) 16, 724 (d) 640, 16

27. Consider a hypothetical 32-bit processor having 32-bit instructions composed of two fields: the first byte contains the opcode and the remainder is the immediate operand or an operand address. . What is the maximum directly addressable memory capacity (in bytes)?
(a) 4 GB (b) 256 MB
(c) 64 MB (d) 16 MB

Scanned with CamScanner

28. Matching the following

P. S RAM	i. Virtual memory
Q. D RAM	ii Cache memory
R. DISK	iii. Refreshing
S. Associate memory	iv. Record
	v. Matching logic

(a) P-ii, R–i, Q–iv, S–v
(b) P–i, R–iv, Q–ii S-iii
(c) P–ii, R–i, Q–iii, S–v
(d) P–i, R–iv, Q–iii, S–v

29. Current instruction of address is 300 decimal in a 24-bit system. Which of the following value is valid with respect to program counter?
(a) 500 (b) 600
(c) 700 (d) 800

30. A memory system of size 16 kbytes is required to be designed using memory chips which have 12 address lines and 4 data lines each. The number of such chips required to design the memory system is:
(a) 2 (b) 4 (c) 8 (d) 16

31. **Assertion (A):** High speed computers use dynamic RAMs in their memory system.
Reason(R): Dynamic RAMs require refreshing cycle.
(a) Both A and R are individually true and R is the correct explanation of A
(b) Both A and R are individually true but R is not the correct explanation of A
(c) A is true but R is false
(d) A is false but R is true

32. A typical cell, for a dynamic RAM can be implemented by using how many MOS transistors?
(a) SIX (b) FIVE
(c) ONE (d) TWO

33. Which block replacement algorithm is not generally used in cache operation?
(a) LIFO (b) FIFO
(c) LRU (d) Random

34. In which unit is the performance of cache memory measured?
(a) Hz (b) Bits/s
(c) Cache constant (d) Hit ratio

35. ROM is used to store table for multiplication of two 8-bit unsigned integers. The size of the ROM required is:
(a) 256 × 8 (b) 64K × 8
(c) 4K × 16 (d) 64K × 16

36. Consider the following statements for a DRAM:
1. Bit is stored as a charge.
2. It is made of MOS transistors.
3. Speed of DRAM is faster than processors.
4. Each memory cell requires six transistors
Which of these statements are correct?
(a) 1 and 2 only (b) 2 and 3 only
(c) 3 and 4 only (d) 1, 2, 3 and 4

Scanned with CamScanner

37. A computer system has a cache with access time 10 ns, a hit ratio of 80% and average memory access time is 20 ns. Then what is the access time for physical memory?
(a) 50 ns (b) 40 ns
(c) 30 ns (d) 20 ns

38. Consider the following statements comparing static RAM with dynamic RAM:
1. In static RAM typical cell requires more number of transistors than the dynamic RAM.
2. Power consumption per bit of static RAM is less than that of dynamic RAM.
3. Dynamic RAM is less expensive than the static RAM.

Which of the above statements are correct?
(a) 1, 2 and 3 (b) 1 and 2 only
(c) 2 and 3 only (d) 1 and 3 only

39. A cache line has 128 bytes. The main memory has latency 64ns and bandwidth 1GB/s. The time required to fetch the entire cache line is
(a) 32 ns (b) 64 ns
(c) 96 ns (d) 192 ns

40. Consider that a level of the memory hierarchy has a hit rate of 80%. Memory requests take 10 ns to complete if they hit in the level, and memory requests that miss in the level take 100 ns to complete. The average access time of the level is
(a) 110 ns (b) 100 ns
(c) 80 ns (d) 28 ns

41. **Statement I:** Virtual memory is designed virtual because there is no such memory inside the computer.
Statement II: Virtual memory uses some space of the hard disk as an extension of the primary storage of the computer.

Scanned with CamScanner

Solutions

01. Ans: (b)

Sol: Number of cache blocks

$$N = \frac{\text{Number of words in cache}}{\text{Number of words/block}}$$

$$= \frac{4K}{64} = 64\ blocks$$

Set

$$S = \frac{N}{K}(\text{for K – way set associative cache})$$

$$= \frac{64}{4} = 16 \text{ sets}$$

Word offset = $\log_2 W$

$= \log_2 64 = 6$

TAG	Set offset	Word offset
	$\log_2 S = 4$	$\log_2 W = 6$

02. Ans: (b)

Sol: W = 16 words/ block

N = 256 blocks

4 – way set associative

M. M = 4096 blocks

$= 2^{12} \times 2^4 = 2^{16}$ words

Physical address size is 16 bit

$$S = \frac{N}{K} = \frac{256}{4} = 64 \text{ sets}$$

Main Memory 16 bits

TAG	Set offset	Word offset
16 – (6 +4) = 6	6	4
	$\log_2 S$	$\log_2 W$

03. Ans: (b)

Sol: In fully associative cache only capacity and compulsory misses are occurred but not conflict misses.

$\therefore 30 + 10 = 40$ ns

04. Ans: (d)

Sol: Always the memory with larger size & with interleaving gives better performance.

05. Ans: (a)

Sol:

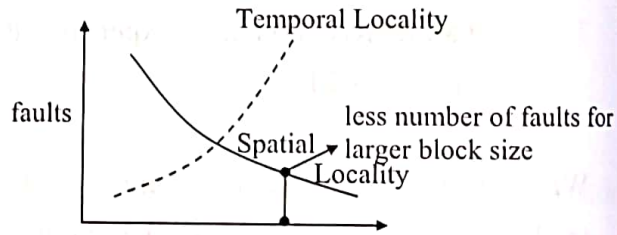

06. Ans: (a)

07. Ans : (c)

Sol: Main memory size $= 2^{14} \times 2^8 B = 2^{22} B$

Number of cache sets $= \frac{128}{4} = 32 = 2^5$

Number of words/Block $= 256 = 2^8$

Tag	Set offset	Word offset
9	5	8

22

Scanned with CamScanner

08. Ans: (a)

Sol: Block size = 2^4B

Number of cache Blocks = $\frac{2^{18}B}{2^4B} = 2^{14}$

Associativity = 4

$\therefore$ Number of sets = $\frac{2^{14}}{4} = 2^{12}$

16	12	4
Tag	Set offset	Byte offset

09. Ans : (c)

Sol: Number of comparators needed

= Associativity

and size of comparator

= Number of Tag bits.

10. Ans: (c)

Sol: K = 4

Block size = 2^8 words;

Number of cache Blocks = 2^8,

Tag size = 4 bits

Number of sets = $\frac{2^8}{4} = 2^6$

Tag	Set offset	Word offset
4	6	8

$\therefore$ Physical Address size = 18 bits

$\therefore$ Main memory size = 2^{18} words

= 256 K words

11. Ans: (c)

12. Ans: (b)

Sol: 40 ns = H × 30 ns + (1 – H)(150 + 30) ns

$\therefore$ H = $\frac{14}{15}$ = 93%

13. Ans: (c)

Sol: When cache size is large and Associativity is more then it gives excellent performance which reduces number of capacity misses and number of conflict misses.

14. Ans: (b)

Sol: Fully Associative map needs more number of tag bits because there is no set/block field and direct mapping needs less number of tag bits.

15. Ans: (b)

Sol:

Tag 10	Set offset 7	Word offset 4

← 21 →

Cache size = $2^4 \times 128 \times 2$ words

= $2^4 \times 2^7 \times 2 = 2^{12}$ words

1 word = 4 Bytes

Tag memory size = 10 × 128 × 2

= 2560 Bits

= 320 Bytes

$\therefore$ Total cache size = (16 KB + 320 B)

Scanned with CamScanner

16. Ans: (c)

Sol: $T_{avg} = HC + (1-H)(M + C)$

$= 16 + 0.2 \times 140$

$= 44ns$

If T_{avg} is increased to 40 ns

New $T_{avg} = 84ns$

$84ns = H \times 20\ ns + (1 - H)(120)\ ns$

$\therefore \quad H = 0.467$

17. Ans: (b)

18. Ans: (b)

19. Ans: (c)

20. Ans: (a)

Sol: In direct map;

One main memory block can be mapped to only one of the cache block number. So, it creates more number of conflict misses

In Block set Associative Map;

When associativity is going on increasing then it reduces the number of conflict misses because Hit Ratio is directly proportional to Associativity.

21. Ans: (c)

Sol: Mapping expression is K Mod S

$S = 8/2 = 4$

K Mod 2	Set No.
0, 16	0
5, 9	1
	2
3, 7, 55	3

As it follows LIFO technique;

3 is replaced with 55

22. Ans: (a)

Sol: I cache

18	10	2

30

Direct Map

Number of cache Blocks $= \frac{4K}{4} = 1K = 2^{10}$

Number of words/Block $= 2^2$

$\therefore$ Tag Memory size $= 18 \times 1K$

D cache

2 way Set Associative

Number of cache Blocks $= 2^{10}$

Number of sets $= 2^9$

19	9	2

30

$\therefore$ Tag size $= 19 \times 1K$

L2 Cache

Size = 64K words; Associativity = 4

Block size = 16 words

Number of cache blocks $= \frac{2^{16}\ \text{words}}{2^4\ \text{words}} = 2^{12}$

Number of sets $= \frac{2^{12}}{4} = 2^{10}$

16	10	4

30

$\therefore$ Tag size $= 16 \times 4K$

Scanned with CamScanner

23. Ans: (c)

24. Ans: (c)

Sol:

Tag	Set offset	Byte offset
16	12	4

32

Cache size = 256 KB = 2^{18}B

Number of Blocks = $\frac{2^{18}B}{2^4B} = 2^{14}$

Number of sets = $\frac{2^{14}}{4} = 2^{12}$

25. Ans: (b)

Sol: $\frac{2^{20} \times 8}{2^{11} \times 4} = 2^{10} = 1024$

26. Ans: (d)

Sol: Total number of instructions = 800

Level 1 Hit rate is 0.8; so, Total number of Hits = 800 × 0.8 = 640

In remaining 160; level 2 Hit rate is 0.9 i.e.,

Total number of Hits = 160× 0.9

= 144

So, level 3 rate is 16

27. Ans: (d)

Sol:

Opcode One Byte(8bit)	Memory

32 bit

∴ Memory Address size = 24 bits

∴ Memory size = 2^{24}B = 16 MB

28. Ans: (c)

29. Ans: (b)

Sol: Current PC value is 300 and it is incremented in 3 multiples.

30. Ans : (c)

Sol: $\frac{16K \times 8}{4K \times 4} = 4 \times 2 = 8$

31. Ans: (b)

Sol: High speed computers use DRAM as main memory because it is less costlier.

32. Ans: (c)

Sol: DRAM is implemented with 1 transistor and SRAM is implemented using 4-6 transistors

33. Ans: (a)

Sol: **LIFO:** Last In First Out

34. Ans: (d)

Sol: Hit ratio is defined as the number of hits divided by the total number of CPU references to the memory (hits plus misses)

$T_{avg} = H\,C + (1 - H)M$

Where H = hit ratio of cache memory

C = time to access information in cache memory

M = Miss penalty

= main memory access time

+ cache memory access time.

Scanned with CamScanner

35. Ans: (d)

Sol: Two 8-bit unsigned multiplication produce 16-bit integer. To store 16-bit answers requires 2^{16} bit memory = $256*256*16=2^{20}$

$= 2^{16} \times 2^4$

$= 64\text{ K} \times 16$ bit

36. Ans: (a)

Sol: Access Time and Cycle Time

DRAM access much slower than SRAM

More bits → longer wires

Buffered access with two-level addressing

SRAM access latency: 2–3ns

DRAM access latency: 20-35ns

DRAM cycle time also longer than access time

Cycle time: time between start of consecutive accesses

SRAM: cycle time = access time

Begin second access as soon as first access finishes

DRAM: cycle time = 2 * access time

37. Ans: (a)

Sol: $T_{avg} = (H \times C) + (1-H) \times (M + C)$

$20\text{ ns} = (0.8 \times 10\text{ ns}) + 0.2 \times (M + 10\text{ ns})$

$(0.2) \times (M + 10\text{ ns}) = 12$

$0.2\text{ M} = 10\text{ ns}$

$\therefore \text{M} = 50\text{ ns}$

38. Ans: (d)

Sol: In static RAM typical cell requires more number of transistors than the dynamic RAM.

Dynamic RAM is less expensive than the static RAM.

39. Ans: (d)

Sol: MM Bandwidth = 1 GB/s

10^9 Bytes ⇒ 1 sec

2^7 Bytes ⇒ 2^7 ns

Total time = MM latency + Data transfer time

= 64 ns + 128 ns

= 192 ns

40. Ans: (d)

Sol: Hit Rate = 80%

$T_{CM} = 10\text{ns}$, $T_{MM} = 100\text{ns}$

$T_{Avg} = H \times T_{CM} + (1-H) \times T_{MM}$

$= (0.8 \times 10\text{ns}) + 0.2 \times 100\text{ns}$

$= 8\text{ns} + 20\text{ns}$

$= 28$ ns

41. Ans: (a)

Sol: Both statements are true and statement II is the correct explanation for statement I

Scanned with CamScanner

Chapter 3 Pipeline Organization

01. A pipeline is to provide speedup 6.6 operating at 100 MHz and with 88% efficiency. How many stages are existing in the pipeline?
(a) 10 (b) 5 (c) 8 (d) 3

02. Store followed by store instruction can result in which of the following hazard?
(a) RAW (b) WAR
(c) WAW (d) RAR

03. First instruction is arithmetic nature while instruction is branch which of the following can occur in pipelined implementation
(a) RAW (b) WAR
(c) WAW (d) RAR

04. Consider the unpipelined machine with 10 nano seconds clock cycles. It uses four cycles for ALU operations and branches whereas five cycles for memory operation. Assume that the relative frequencies of these operations are 40%, 20% and 40% respectively. Suppose that due to clock skew and setup, pipelining the machine adds 1 nano seconds overhead to the clock. How much speed up in the instruction execution rate will we gain from a pipeline?
(a) 2 times (b) 3 times
(c) 4 times (d) 6 times

Data for Q05 and Q06 are given below. Solve the problems and choose correct answer

An instruction pipeline has five stages where each stage takes 2 nano seconds and all instructions use all five stages. Branch instructions are not overlapped, i.e., the instruction after the branch is not fetched till the branch instruction is completed. Under ideal conditions.

05. Calculate the average instruction execution time assuming that 20% of all instructions executed are branch instructions. Ignore the fact that some branch instructions may be conditional
(a) 3 milli seconds (b) 4 milli seconds
(c) 4.6 nano seconds (d) 3.6 nano seconds

06. From above question, if a branch instruction is a conditional branch instruction, the branch need not be taken; if the branch is not taken, the following instructions can be overlapped. When 80% of all branch instructions are conditional branch instructions, and 50% of the conditional branch instructions are such that the branch is taken, what is the average instruction execution time?
(a) 4 milli secs (b) 3.6 milli secs
(c) 2.96 nano secs (d) 3.74 nano secs

Scanned with CamScanner

07. An instruction pipeline is managed by

I. Programmers

II. Program compilers

III. By the CPU's internal program control unit

(a) Only I (b) I and II

(c) I and III (d) II and III

08. In an instruction pipeline of 10 ns clock the memory instruction takes 2-stalls while branch related one takes 3-stalls. If the frequency of memory related & branch instructions 20% & 30%. What is the average instruction time?

(a) 11.3 ns (b) 13 ns

(c) 23 ns (d) 13.3 ns

09. Which of the following Hazards occur at the following 2 instructions in pipeline?

ADD R_4, R_2, R_8

ADD R_4, R_7, R_4

(a) RAW (b) WAR

(c) WAW (d) both (a) & (c)

10. Assume that the time required for the five functional units, which operate in each of the five cycles, are : 10 ns, 8 ns, 10 ns, 10 ns and 7 ns. Assume that pipelining adds 1 ns of overhead. Find the speed up versus the single cycle data path.

(a) 4.1 times (b) 4.5 times

(c) 4.8 times (d) 3.7 times

11. A four stage instruction pipeline system has the stage reliability 0.8, 0.8, 0.7, 0.9 respectively, the maximum reliability of the pipeline is

(a) 0.9 (b) 0.7

(c) 0.40 (d) 0.63

12. Consider a pipeline with 4 stages (Fetch, Decode, Execute, write). Assume the fetch takes 4 units of time, decode takes 2 units of time and execute takes 3 units of time and write takes 4 units of time. What is the effective speedup factor if pipeline operates with 80% efficiency?

(a) 4 (b) 3.25

(c) 2.6 (d) 6.25

13. We have two designs D_1 and D_2 for a synchronous pipeline processor. D_1 has 5 pipeline stages with execution times of 3 nanoseconds, 2 nanoseconds, 4 nanoseconds, 2 nanoseconds, and 3 nanoseconds while the design D_2 has 8 pipeline stages each with 2 nanoseconds, execution time. How much time can be saved using design D_2 over Design D_1 for executing 100 instructions?

(a) 214 nsec (b) 202 nsec

(c) 86 nsec (d) 200 nsec

Scanned with CamScanner

14. A processor operating with 1 MHz clock requires 3 clocks in the first stage and one clock is in remaining 3 stages of the instruction pipeline. If the interstage buffers consume one clock delay what is the average instruction time?

(a) 3 Micro-seconds (b) 4 Micro-seconds
(c) 6 Micro-seconds (d) 7 Micro-seconds

15. An instruction pipeline of 5-stages uses 2GHz clock while executing 100 instruction program. Third stage takes 2 clocks while others take one each. How much time is required to complete the program with ideal conditions?

(a) 51.5 ns (b) 52ns
(c) 103ns (d) 104ns

16. An instruction pipeline allows the overlapping of all instructions except conditional branch instructions. The target of branch will not be fetched until the condition is evaluated and address is computed, third stage will provide this. How much time is needed for 200 instruction program with 20% conditional branch instructions 2 GHz clock is used with pipeline.

(a) 140 ns (b) 1400 ns
(c) 200 ns (d) 220 ns

Scanned with CamScanner

Solutions

01. Ans: (c)

Sol: $\frac{\text{Speed up factor}}{\text{number of stages}} \times 100 = \text{efficiency}$

$\frac{6.6}{k} \times 100 = 88 \Rightarrow k = 7.5$

$\Rightarrow$ Number of stages = 8

02. Ans: (c)

Sol: Store is a write operation

store followed by store

↓

Write After Write $\Rightarrow$ WAW Hazard

03. Ans: (a)

Sol: Until knowing the branch status; it is not possible to determine target address.

04. Ans : (c)

Sol: $t_n = 10 \times (0.4 \times 4 + 0.2 \times 4 + 0.4 \times 5)$
$= 44$ ns

$t_p = 10 + 1 = 11$ ns

$\therefore \quad S = \frac{t_n}{t_p} = \frac{44}{11} = 4$

05. Ans : (d)

Sol: $0.8 \times (2 \times 1) + 0.2 \times (2 \times (1 + 4))$ ns = 3.6 ns

06. Ans : (c)

Sol: $(0.8 \times 2ns) + (0.04 \times 10ns) + (0.08 \times 10ns) + (0.08 \times 2ns)$.

$= 1.6ns + 0.4ns + 0.8ns + 0.16ns$

$= 2.96$ ns

07. Ans: (d)

08. Ans: (c)

Sol: $(0.5 \times 10ns) + \{(0.2)\times(2+1)\times(10ns)\}$
$+\{0.3\times(3+1)\times(10ns)\}$
$= 5 + 6 + 12 = 23$ ns

09. Ans: (d)

Sol:

ADD R_4, R_2, R_8
ADD R_4, R_7, R_4 RAW

ADD R_4, R_2, R_8
ADD R_4, R_7, R_4
WAW

10. Ans: (a)

Sol: $S = \frac{t_n}{t_p}$

$t_n = \sum S_i = 10 + 8 + 10 + 10 + 7 = 45$ ns

t_p = Highest delay = 11ns

$\therefore \; S = \frac{45ns}{11ns} = 4.1$

11. Ans: (a)

12. Ans: (c)

13. Ans: (b)

Sol:

D_1	D_2
K = 5	K = 8
Stage delay 4ns	2ns
n = 100	n = 100

$\therefore$ Total time

$(100+5-1)\times 4ns = 416$ ns for D_1,

$(100+8-1)2ns = 214$ ns for D_2

$\therefore$ Amount of time saved = 202 ns

Scanned with CamScanner

14. Ans: (b)

Sol: While executing more number of instructions; Only one stage delay is sufficient to complete one instruction execution, which is equal to the Highest delay of one of the segments + pipeline Register delay

$\therefore$ total clocks = 3 + 1 = 4

Frequency = 1 MHz

One clock cycle time 1 μsec

So, Average instruction time = 4 μsec

15. Ans: (d)

Sol: k = 5

n = 100

$t_p = (k + n - 1) \times$ Highest delay of one of the segments

$= (5 + 99) \times 2$ clks

= 208 clks, 1 clk time = 0.5 ns

$\therefore$ Total time = 104 ns

16. Ans: (a)

Scanned with CamScanner

Chapter 4 CPU Organization

01. Relative base addressing is relevant for writing
(a) Co-routines
(b) Position – independent routines
(c) Sharable routines
(d) Interrupt handlers

02. Which of the following addressing modes permits without any change what-so-ever in code
(a) Direct
(b) Relative with PC
(c) Indexed
(d) Base register addressing

03. A system has 13 bit instructions and support one address and zero address instructions if there are 32 one address instructions exists how many zero address instructions are supported by the processor
(Assume 128 – word memory)
(a) 2048 (b) 1024
(c) 3072 (d) 4096

04. For the above which one of the following is **valid?**
(a) 32 – one address and 1024 zero address
(b) 64 – one address and 1024 zero address
(c) 63 – one address and 128 zero address
(d) 32 – one address and 2048 zero address

05. A processor has 16 address lines and 12 data lines. The maximum number of opcodes generated by the processor
(a) 2^6 (b) 2^{16} (c) 2^{12} (d) 2^8

06. The expression for a machine which is having m–bit instructions that can contain zero-address, one–address, two–address instructions. Let the memory is having 2^p words. r, s, t denoting number of zero, one, two address instructions respectively.
(a) $2^m = (r+s+t).2^p$
(b) $2^m = r.2^p + s.2^{2p} + t.2^{3p}$
(c) $2^m = r + s.2^p + t.2^{2p}$
(d) $2^m = r.2^{2p} + s.2^p + t$

07. Which of the following addressing modes are suitable for program relocation at runtime?
(i) Absolute addressing
(ii) Based addressing
(iii) Relative addressing
(iv) Indirect addressing
(a) (i) and (iv) (b) (i) and (ii)
(c) (ii) and (iii) (d) (i), (ii) and (iv)

08. Compared to
(i) absolute addressing mode
(ii) register addressing mode processing with speed of
(a) (ii) > (i) (b) (i) > (ii)
(c) (i) = (ii) (d) not comparable

09. The most appropriate matching for the following pairs:
List – I
X. Indirect addressing
Y. Immediate addressing
Z. Auto Decrement addressing

Scanned with CamScanner

List – II

1. Loops
2. Pointers
3. Constants

Codes:

(a) X–3, Y–2, Z–1 (b) X–1, Y–3, Z–2
(c) X–2, Y–3, Z–1 (d) X–3, Y–1, Z–2

10. Match the following:

List – I

P. Base addressing
Q. Indexed addressing
R. Stack addressing
S. Implied addressing

List –II

1. Reentrancy
2. Accumulator
3. Array
4. Position independent

Codes:

(a) P–3, Q–4, R–2, S–1
(b) P–2, Q–1, R–4, S–3
(c) P–4, Q–3, R–1, S–2
(d) P–1, Q–2, R–3, S–4

For Question 11 there are two statements Assertion (a) and Reason (r).

Choose

(a) Both (a) and (r) are true and (r) is the correct reason for (a)
(b) Both (a) and (r) are true but (r) is not the correct reason for (a).
(c) Both (a) and (r) are false.
(d) (a) is true but (r) is false.

11. **Assertion(a):** Register addressing mode is advantageous if some set of data or intermediate results are used many times.
Reason (r): The instruction using register addressing is shorter in length, so it is faster.

12. How many 1–address instructions exists if there are 8 – "2–address" instructions
(a) 1016 (b) 512
(c) 256 (d) none

13. If there are 496 "1- address" instructions, how many "2 – address" instructions possible
(a) not possible (b) 8
(c) 11 (d) 512

14. A system supports zero address, one address & two address instructions. Let 16-bit instruction is stored in 128-word memory. Identify the ***correct*** among the following.
(a) 16K zero address, 128-one address, 2-two address instructions
(b) 256 K one address, 3-two address, 64-zero address instructions
(c) 28 K zero address, 2-two address, 32-one address instructions
(d) None of the above

15.

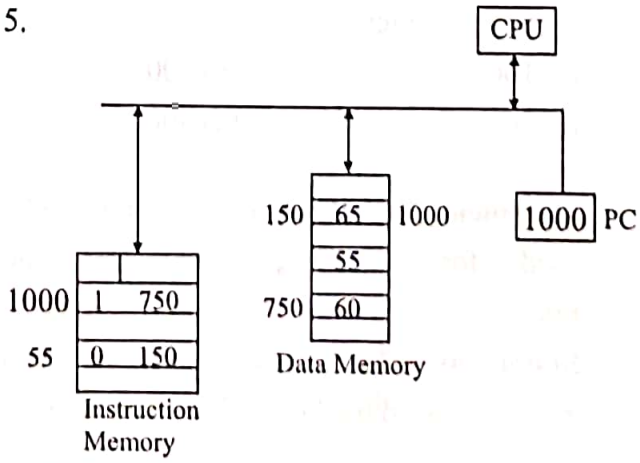

Scanned with CamScanner

- If instruction cache takes 2 clocks and data cache takes 3 clocks. The number of clocks needed to complete execution cycle INC $ PC is

(a) 7 (b) 5 (c) 8 (d) 6

16. Match the following:

List– I

(1) x = @p

(2) x(i) = y(i) 2

(3) x ++

List – II

(X) Direct addressing mode

(Y) Indirect addressing mode

(Z) Auto increment addressing mode

(W) Index addressing mode

Codes:

(a) 1 – X, 2 – Y, 3 – Z

(b) 1 – Y, 2 – W, 3 – Z

(c) 1 – Y, 2 – Z, 3 – W

(d) 1 – X, 2 – W, 3 – Z

17. A 48 bit instruction is stored in byte organized memory which of the following decimal address is valid with respect to program counter.

(a) 100 (b) 200

(c) 300 (d) 400

18. **Statement (S1):** Relative addressing mode is used for accessing the intra-segment branching.

Statement (S2): the static variables can be easily accessed by direct addressing mode.

(a) Only S1 is correct

(b) Only S2 is correct

(c) Both S1 & S2 are correct

(d) Neither S1 nor S2 is correct

19. A Hypothetical processor supports 1 address instructions and 2 address instructions the 16 bit instruction is stored in 128 word memory identify the ***correct*** statement.

(a) The machine supports one 2-address instructions and 388 1-address instructions

(b) The machine supports two 2-address instructions and 384 1-address instructions

(c) The machine supports four 2-address instructions and single 1-address instruction

(d) The machine supports three 2-address instructions and 128 1-address instructions.

20. Which of the following statements is ***true*** for a processor with load-store architecture?

(1) Only the LOAD and STORE instructions can be executed by the processor

(2) All the instructions can refer to a memory operand

(3) An arithmetic instruction can refer to only one memory operand

(4) Only the LOAD and STORE instructions can refer to a memory operand

(a) 1, 2, 3 & 4 (b) 2, 3 & 4

(c) 2 & 4 (d) 4

21. One of the r
is base – di
has the pow
(a) Pre inde
(b) Post ind
(c) Progran
(d) Indexed

22. Which of
with respe
(a) More c
(b) Suppo
(c) Variab
(d) Suppo

23. Which c
character
(a) One i
(b) Regis
(c) simp
(d) Regi

24. The con
determine
the execu
1. Progra
2. Proces
3. Certai
Select t
given be
(a) 1 and
(c) 1 an

25. In a mi
address
(a) Acc
(c) Stac

Scanned with CamScanner

21. One of the most popular addressing schemes is base – displacement addressing because it has the power of
(a) Pre indexed register indirect mode
(b) Post indexed register indirect mode
(c) Program relocatability
(d) Indexed register indirect mode

22. Which of the following is ***not*** advantageous with respect to CISC system?
(a) More complexity in designing complier
(b) Support more addressing modes
(c) Variable length instructions
(d) Support parallel processing

23. Which one of the following is ***not*** a characteristic of RISC processor design?
(a) One instruction per cycle
(b) Register-to-register operations only
(c) simple address modes
(d) Register-to-memory operations only

24. The content of which of the following determines the state of the CPU at the end of the execute cycle
1. Program counter
2. Processor register
3. Certain status conditions
Select the correct answer using the codes given below:
(a) 1 and 2 (b) 2 and 3
(c) 1 and 3 (d) 1, 2 and 3

25. In a microprocessor, the register which holds address of the next instruction to be fetched is
(a) Accumulator (b) Program counter
(c) Stack pointer (d) Instruction register

26. Consider the following:
1. Operation code
2. Source operand reference
3. Result operand reference
4. Next instruction reference
Which of the above are typical elements of machine instructions?
(a) 1, 2 and 3 only (b) 1, 2 and 4 only
(c) 3 and 4 only (d) 1, 2, 3 and 4

27. An addressing mode in which the location of the data is contained within the mnemonic, is known as
(a) Immediate addressing mode
(b) Implied addressing mode
(c) Register addressing mode
(d) Direct addressing mode

28. Match List–I with List–II and select the correct answer using the codes given below the lists:

List - I
P. Pipelined ALU
Q. Simpler compiler
R. Separate data and instruction caches
S. Lesser cycles per instruction

List - II
1. RISC
2. CISC
3. Mixed RISC – CISC

Codes:

	P	Q	R	S
(a)	3	2	3	1
(b)	1	2	3	3
(c)	3	3	2	1
(d)	3	3	3	1

Scanned with CamScanner

Solutions

01. Ans: (b)

Sol: Relative Base Addressing mode is used to relocate the program from one memory segment to other without changing Base Register Content.

02. Ans: (d)

Sol: Base register addressing provides (relocatable programs) position independent routines.

03. Ans: (d)

Sol:

13 bit
Opcode

Max. number of one address instructions: 64

operation	Address
6	7

If it uses 32 one Address instructions then remaining 32 free combinations are used for zero address instructions.

So, max number of zero address instructions to be formulated is $\left.\right\} 32 \times 2^7 = 4096$

04. Ans: (c)

Sol: If 63 are One Address instructions then number of zero Address instructions

$1 \times 2^7 = 128$

05. Ans: (c)

Sol: max number of opcodes = 2^x

Where x = number of data lines.

06. Ans: (c)

Sol: word size = m bit, Let m = 13

Number of words in memory = 2^p

$\therefore$ Number of address bits = p

Maximum number of 2 address instructions

	A_1	A_2
	P	P

13

5	4	4	= 32 = r
	A_1	A_2	

If it uses 12, two address instructions then max number of one address instructions is 20×2^4

If it uses 15 number of one address instructions then max number of zero address instructions is 5×2^8

Then total different size of instructions are

$= (12) + 15 \times 2^4 + 5 \times 2^8 = r + s.\ 2^p + t.\ 2^{2p}$

07. Ans: (c)

Sol: PC relative addressing mode is used for implementing intersegments and Base Register Addressing Mode is used for intersegments.

08. Ans: (a)

Sol: In register direct addressing mode. The contents on the register are accessed quickly than absolute addressing mode.

$\therefore$ speed (register-addressing mode) > speed (absolute addressing mode)

09. Ans: (c) **10. Ans: (c)**

Scanned with CamScanner

11. Ans: (b)

12. Ans: (b)

Sol:

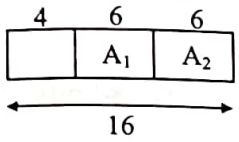

$(2^4-8) \times 2^6 = 512$

13. Ans: (b)

Sol: If it uses less than 512 one Address instructions, then it is possible to use '8' number of 2 Address instructions.

14. Ans: (c)

Sol:

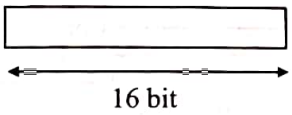

Max number of 2 Address instructions:

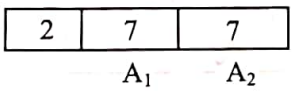

$= 2^2 = 4$

→ But if it uses 2 number of two Address instructions then max number of one Address instructions $= 2 \times 2^7 = 256$

→ If it uses 32 one Address instructions then max number of zero Address instructions is $(256 - 32) \times 2^7 = 28$ K

15. Ans: (b)

Sol: Both instruction cache and data caches are needed to access. Instruction cache is used to fetch the instruction and data cache is used to complete the execution; so, $3 + 2 = 5$ clocks are needed.

16. Ans: (b) **17. Ans: (c)**

18. Ans: (c) **19. Ans: (d)**

20. Ans: (d) **21. Ans: (c)**

22. Ans: (a) **23. Ans: (d)**

24. Ans: (c)

Sol: The program counter always holds the address of the next instruction to fetched from the memory location process register.

25. Ans: (b)

Sol: Given statement is the definition of Program Counter(PC).

26. Ans: (d)

Sol: All the above parameters act as a part in the instruction execution cycle.

27. Ans: (b)

Sol: In implicit addressing mode (Implied addressing Mode) the location of the data is implicit so only operation part is sufficient in the instruction

28. Ans: (c)

Sol: → RISC & CISC both use pipelined ALU

→ RISC & CISC both support simpler compiler to use

→ Only CISC has separate data and instruction cache

→ RISC takes less cycles per instruction

Scanned with CamScanner

Chapter 5 Control Unit Design

01. Certain processor has vertical micro-instruction format containing 10 separate control fields C_0: C_9 each C_i activities any one of n_i distinct control lines

i=0	0	1	2	3	4	5	6	7	8	9
N	4	4	3	11	9	16	7	1	8	22

What is the minimum number of control bits required in control field?

(a) 30 (b) 26 (c) 35 (d) 40

Data for Q02 and Q03 are given below. Solve the problems and choose correct answer

A micro control unit is having control word in the following format

Condition	Control field information	Next address

if it has to generate 46 control signals. Next addresses are selected based on 8 conditional oblique flag information. If the control memory is having 1024 control program of size 8 words.

02. What is the size of the control word in horizontal microprogramming?

(a) 59 bits (b) 80 bits

(c) 19 bits (d) 10 bits

03. What is the size of the control word in vertical microprogramming?

(a) 59 bits (b) 80 bits

(c) 19 bits (d) 10 bits

04. The micro instructions stored in the control memory of a processor have a width of 26 bits. Each microinstruction is divided into three fields a micro operation field of 13 bits, a next address field (X), and a MUX select field (Y). There are 8 status bits in the inputs of the MUX.

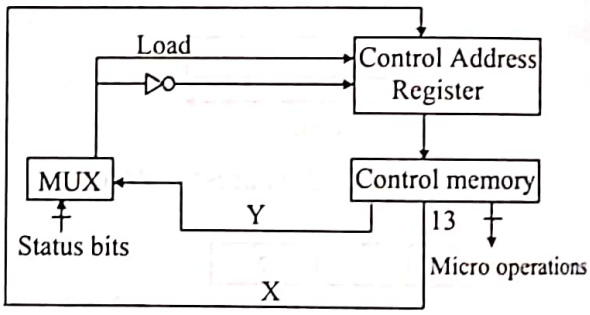

How many bits are there in the X and Y fields, and what is the size of the control memory in number of words?

(a) 10, 3, 1024 (b) 8, 5, 256

(c) 5, 8, 2048 (d) 10, 3, 512

05. A control memory is having 1024 control words, the micro-instruction is having 3 fields, the micro-operation field has to support either 1 or none of the 16 micro-operations and at most 6 from the remaining. It can support 16 flag conditions. What will be the minimum number of bits needed in the micro-operation field and what is the size of control memory?

Scanned with CamScanner

(a) 24 bits, 3072 bytes
(b) 24 bits, 2048 bytes
(c) 26 bits, 2048 bytes
(d) 26 bits, 3072 bytes

06. A hardwired CPU uses 10 control signals S_1 to S_{10} in various time steps T_1 to T_5 to implement 4 instructions I_1 to I_4 as shown below

	T_1	T_2	T_3	T_4	T_5
I_1	S_1, S_3, S_5	S_2, S_4, S_6	S_1, S_7	S_{10}	S_3, S_8
I_2	S_1, S_3, S_5	S_8, S_9, S_{10}	S_5, S_6, S_7	S_6	S_{10}
I_3	S_1, S_3, S_5	S_7, S_8, S_{10}	S_2, S_6, S_9	S_{10}	S_1, S_3
I_4	S_1, S_3, S_5	S_2, S_6, S_7	S_5, S_{10}	S_6, S_9	S_{10}

Which of the following pairs of expressions represent the circuit for generating control signal S_5 and S_{10} respectively $[(I_j+I_k).\ T_n$ indicates that the control signal should be generated in time step T_n if the instruction being executed is I_j or $I_k]$?

(a) $S_5 = T_1 + I_2.T_3$ and
$S_{10} = (I_1 + I_3).\ T_4 + (I_2 + I_4).T_5$

(b) $S_5 = T_1 + (I_2+T_4).\ T_3$ and
$S_{10} = (I_1 + I_3).T_4 + (I_2 + I_4).T_5$

(c) $S_5 = T_1 + (I_2+T_4).\ T_3$ and
$S_{10} = (I_1 + I_3+I_4).T_2+(I_1+I_3).T_4 + (I_2 + I_4).T_5$

(d) $S_5 = T_1 + (I_2+I_4).\ T_3$ and
$S_{10} = (I_2 + I_3).T_2+I_4.T_3+(I_1+I_3).T_4 + (I_2 + I_4).T_5$

07. Match the following:

List–I

P. Micro – programmed control unit
Q. Memory mapped I/O
R. TRAP (in 8085 processor)

List–II

1. More flexible I/O program
2. RISC processor
3. Both edge and level triggered
4. CISC processor

Codes:

(a) P – 1, Q – 4, R – 3
(b) P – 4, Q – 1, R – 3
(c) P – 4, Q – 2, R – 3
(d) P – 2, Q – 4, R – 3

08. The instruction MOV AX, [BX] [DI] ÷ 2 represents the following addressing mode?

(a) register indirect
(b) index relative
(c) base relative
(d) base indexed

09. Which of the following statement/s is/are true for a Micro-programmed control unit?

(1) Each machine instruction is a sequence of microinstructions
(2) Each microinstruction is a set of control words
(3) Each control word is a set of active control signals
(4) RISC processors use the micro-programmed control unit

(a) 1, 2 & 4
(b) 1, 2 & 3
(c) 2, 3 & 4
(d) 1 & 3

Scanned with CamScanner

10. In the hardware control unit design it is required to generate 6 control signals(S_0 to S_5) and 3 instructions (I_1, I_2, I_3) each instruction takes 4 micro operations. The following table gives the associated control signals for each micro operation:

Micro Operation	I_1	I_2	I_3
T_1	S_0, S_3	S_0, S_6	S_0, S_1
T_2	S_1, S_5	S_2, S_5	S_3, S_4
T_3	S_3, S_4	S_0, S_1	S_4, S_6
T_4	S_1, S_2	S_2, S_3	S_4, S_2

Expression for the control signals S_0, S_3?

(a) $S_0 = T_1 + I_2 T_3$, $S_3 = I_1 T_1 + I_3T_2 + I_2T_4$

(b) $S_0 = T_1 + I_2 T_3$, $S_3 = I_1 T_1 + I_3T_2 + I_2T_4 + I_1T_3$

(c) $S_0 = I_1T_1 + I_1 T_2$, $S_3 = I_1 T_3 + I_3T_2 + I_2T_4$

(d) $S_0 = I_1T_1 + I_2T_1 + I_2T_3$, $S_3 = I_1T_1 + I_3T_2 + I_2T_4$

11. An instruction requires four stages to execute: stage 1 (instruction fetch) requires 30 ns, stage 2 (instruction decode) = 9 ns, stage 3 (instruction execute) = 20 ns and stage 4 (store results) = 10 ns. An instruction must proceed through the stages in sequence. What is the minimum asynchronous time for any single instruction to complete?

(a) 69 ns (b) 31 ns

(c) 30 ns (d) 10 ns

12. The following micro-operations are part of interrupt cycle of a control unit

1. MAR ← save address
   PC ← routine address
2. MBR ← (PC)
3. Memory ← (MBR)

Which of the following is the *correct* order of their occurrence?

(a) 1, 2 and 3 (b) 2, 3 and 1

(c) 2, 1 and 3 (d) 3, 1 and 2

Scanned with CamScanner

Solutions

01. Ans: (a)

02. Ans: (a)

Sol:

3	46	$\log_2 1024$

$= 3 + 46 + 10 = 59$

03. Ans: (c)

Sol:

3	$\log_2 46$	$\log_2 1024$

$= 3 + 6 + 10 = 19$

04. Ans: (a)

Sol:

Operation	MUX select field	Next Address field
13	3	10

26

$\therefore$ Control memory size $= 2^{10}$ words $= 1024$

05. Ans: (a)

06. Ans: (d)

07. Ans: (b)

08. Ans: (d)

09. Ans: (b)

10. Ans: (b)

11. Ans: (a)

Sol: All stages are needed to perform in Asynchronous mode, so time needed is

$30 + 9 + 20 + 10 = 69$ ns

12. Ans: (c)

Scanned with CamScanner

Chapter 6 I/O Organization

01. Suppose the time taken to service the page fault on average is 10 milliseconds. The memory access time is 1 microsecond. The average access time of memory system with hit ratio 99.99%

(a) 1.9999 msec (b) 1 ms
(c) 9.999 micro sec (d) 1.9999 micro sec

02. Of the following, which bits characterizes computer that uses memory mapped I/O?

(a) The computer provides special instructions for manipulating I/O ports
(b) I/O ports are placed at addresses on the bus and are accessed like other memory locations
(c) To perform an I/O operation, it is to place the data in an address register and call the channel to perform the operation
(d) None of the above

03. For serial – access memories, the access time is long relatively because of

(i) The read – write head positioning time
(ii) The relatively slow speed at which the tracks movement
(iii) The fact that data transfer to and from the memory is serial rather than parallel

(a) only (i) (b) only (iii)
(c) only (i) and (ii) (d) (i), (ii) & (iii)

For Questions 04 and 05 there are two statements Assertion (a) and Reason (r). Choose

(a) Both (a) and (r) are true and (r) is the correct reason for (a)
(b) Both (a) and (r) are true but (r) is not the correct reason for (a).
(c) Both (a) and (r) are false.
(d) (a) is true but (r) is false.

04. **Assertion[a]:** IO module and main memory can exchange data directly without the CPU involvement.

Reason[r]: Using DMA, IO module and main memory can exchange data directly without the CPU involvement.

05. **Assertion(a):** Two control signals are used for each register access.

Reason (r): To place the contents of that register on the bus and to load the data on the bus into the register.

06. Identify the *correct* statement among the following:

I. The direct memory access request is recognized only at the end of current instruction cycle.
II. The daisy chaining allows the recognition of multiple interrupts with single interrupt line.

Scanned with CamScanner

(a) Only I is true
(b) Only II is true
(c) Both are true
(d) Both are false

07. The daisy chaining is useful for
(a) Connecting the serial inputs
(b) Connecting the serial outputs
(c) Connecting parallel outputs
(d) Implementing the priority interrupts

08. A device with data transfer rate 10 KB/sec is connected to a CPU. Data is transferred byte wise. Let the interrupt overhead be 4 μsec. The byte transfer time between the device interface register and CPU or memory is negligible. What is the minimum performance gain of operating the device under interrupt mode over operating it under program controlled mode?
(a) 15
(b) 25
(c) 35
(d) 45

09. Suppose that a bus has 32 data lines and requires 4 cycles of 250ns each to transfer data. The bandwidth of the bus would be 2MB/s. If the cycle time of the bus is reduced to 125 ns and the number of cycles required to transfer stayed the same, what would be the bandwidth of the bus?
(a) 1 MB/s
(b) 0.5 MB/s
(c) 4 MB/s
(d) Bandwidth does not depend on the cycle time

10. In the Data flow architecture the instruction execution depends on
(a) Its position in the program
(b) Availability of data
(c) Availability of processor
(d) If it is in the first 5 instructions

11. On receiving an interrupt from an I/O device, the CPU:
(a) Halts for a predetermined time
(b) Branches off to the interrupt service routine after completion of the current instruction
(c) Branches off to the interrupt service routine immediately
(d) Hands over control of address bus and data bus to the interrupting device

Scanned with CamScanner

Solutions

01. Ans: (d)

Sol: s = 10 msec

m = 1 μsec

h = 0.9999

$T_{avg} = h\,m + (1 - h)(m + s)$

$= 0.9999\,(1\ \mu sec) + (0.0001)$

$(1\ \mu sec + 10\ msec)$

$= 0.9999\,(1\ \mu sec) + (0.0001)\,(10\ msec)$

$= [0.9999 + 1] + 1\ \mu sec = 1.9999\ \mu sec$

$= 1.9999$ microsec

02. Ans: (b)

03. Ans: (d)

04. Ans : (a)

Sol: Definition of DMA access.

05. Ans: (a)

06. Ans: (b)

07. Ans: (d)

08. Ans: (b)

09. Ans: (c)

10. Ans: (b)

11. Ans: (b)

Sol: On Receiving an interrupt from an I/O device, the CPU branches off to the interrupt service routine after completion of the current instruction.

Scanned with CamScanner

Chapter 7 Secondary Memories

01. A moving arm disk storage device has the following specifications

Recording surface	=	200
Disk – rotation speed	=	2400 rpm
Track capacity	=	62500 bits

Estimate average latency and data transfer rate and latency.

(a) 2.5 MIPS, 25 ms
(b) 2500 MIPS, 12.5 ms
(c) 2700 MIPS, 25 ms
(d) 2.5 MIPS, 12.5 ms

02. A hard disk of 9.09 GB has the following specifications

Number of disks (recording surfaces)	14 (27)
Number of Tracks for surface	4925
Number of sectors of all recording surfaces	17,755,614

What is the size of basic unit of data transfer?

(a) 512 bytes (b) 1024 bytes
(c) 256 bytes (d) 2048 bytes

Common Data for Questions 03 & 04 are given

If the overhead for formatted disk is 96 bytes for 4000 byte sector

No. of surfaces	:	8
Outer diameter of the disk	:	12 cm
Inner diameter of the disk	:	4 cm
Inner track space	:	0.1 cm
No. of sectors /track	:	20

03. Compute the unformatted capacity of the disk

(a) 25.6 MB (b) 4 MB
(c) 100 MB (d) 1 GB

04. If the disk is rotating 3600 rpm, the effective data transfer rate

(a) 246 Kbps (b) 246 Mbps
(c) 2.46 Kbps (d) 4.8 Mbps

For Question 05, there are two statements Assertion (a) and Reason (r).

Choose

(a) Both (a) and (r) are true and (r) is the correct reason for (a).
(b) Both (a) and (r) are true but (r) is not the correct reason for (a).
(c) Both (a) and (r) are false.
(d) (a) is true but (r) is false.

05. **Assertion[a]:** For serial – access memories, the access time is relatively long

Reason[r]: The relatively slow speed at which the tracks movement.

06. Access to moving head disks requires three periods of delay before information is brought into memory. The response that correctly lists the three time delays for the physical access of data in the order of the relative speed

(i) Latency time
(ii) Cache overhead time
(iii) Seek time
(iv) Transfer time

Scanned with CamScanner

(a) i < ii < iii (b) iv < i < iii
(c) iii < i < iv (d) ii < i < iii

Data for Q07, Q08 are given below. Solve the problems and choose correct answer

The disk contains: 200 tracks; Disk rotation speed: 2400 rpm; Track capacity: 62500 bits Number of sectors per track: 1024

07. Find the number of bytes per unit data transfer?
(a) 4 bytes (b) 8 bytes
(c) 16 bytes (d) 7812 bytes

08. From above data, what is the average latency time?
(a) 50 msec (b) 70 msec
(c) 30 msec (d) 12.5 msec

For Question No. 09 there are two statements Assertion (a) and Reason (r).

Choose:
(a) Both (a) and (r) are true and (r) is the correct reason for (a).
(b) Both (a) and (r) are true and (r) is not the correct reason for (a).
(c) Both (a) and (r) are false.
(d) (a) is true but (r) is false.

09. **Assertion (a):** The capacity of the disk which uses constant angular velocity is less than that with constant linear velocity.
Reason (r): The recording density varies from track to track in case of the disk which rotates with constant angular velocity.

10. In magnetic–tape memory if an 80–track tape of linear velocity 50 in/sec and record density 110 kb/in-track, the maximum data transfer rate is
(a) 50 MBPS (b) 200 MBPS
(c) 55 MBPS (d) 70 MBPS

11. Calculate the number of surfaces in a disk pack of capacity 1GB.
Number of sectors per track = 512
Number of tracks per surface = 64
Number of bytes per sector = 4096
The internal disk diameter = 0.7 inches
(a) 4 (b) 6
(c) 8 (d) 10

Statement for Linked answer Q12 and Q13 are given below.
A disk has 8 equi-distance tracks the diameters of innermost and outermost tracks are 1cm and 8cm respectively. The innermost track has a storage capacity of 10 MB.

12. What is the total amount of data that can be stored on the disk if it is used with a drive that rotates it with
(i) Constant linear velocity?
(ii) Constant angular velocity?
(a) 80 MB, 2040 MB
(b) 2040 MB, 80 MB
(c) 80 MB, 360 MB
(d) 360 MB, 80 MB

Scanned with CamScanner

13. If the disk has 20 sectors per track and is currently at the end of the 5th sector of the inner-most track and the head can move at a speed of 10 meters/sec and it is rotating at constant angular velocity of 6000 r.p.m. How much time will it take to read 1 MB contiguous data starting from the sector 4th of the outermost track?

(a) 10 ms (b) 9.5 ms
(c) 13.5 ms (d) 20 ms

Statement for Linked answer Q14 and Q15 is given below.

A 32-bit Machine has 2-selector channels with 2-magnetic tapes and 2-magnetic disk drives connected to each of them. There is also a multiplexer channel which has 2-line printers and 10-video printers.

The speed of the devices are:

Disk drive	:	800 kbs
Tape drive	:	200 kbs
Line printer	:	6.6 kbs
Video	:	1 kbps

14. What is the estimated maximum aggregate I/O transfer?

(a) 14.2 kbs (b) 1614.2 kbs
(c) 1014.2 kbs (d) 16.2 kbs

15. What is the average aggregate I/O transfer?

(a) 14.2 kbs (b) 1614.2 kbs
(c) 1014.2 kbs (d) 16.2 kbs

16. In NOVIX OS the time required for various file read operations are given below.
Disk seek time 25msec.
Disk latency: 8 m sec.
Disk Transfer rate: 1m sec / KByte.
Operating system overhead:
1 m sec / K Byte +10msec
What is the time required to retrieve a block of 2k bytes?

(a) 45 ms (b) 47 ms
(c) 90 ms (d) 94 ms

17. The capacity of hard disk with 16 platters, 1 K cylinders, 128 sectors per track, 512 bytes per sector is

(a) 1 GB (b) 2 GB
(c) 4 GB (d) 8 GB

18. The disk specification is given as 64 tracks, 512 sectors and 1 KB/sector. The data transfer rate with 3000 rpm

(a) 5 MBPS (b) 25 MBPS
(c) 50 MBPS (d) 100 MBPS

19. A disk unit has 24 recording surfaces. It has a total of 14000 cylinders. There is an average of 400 sectors per track. Each sector contains 512 bytes of data. What is the data transfer rate at a rotational speed of 7200 r.p.m.?

(a) 68.80×10^6 bytes/s
(b) 24.58×10^6 bytes/s
(c) 68.80×10^3 bytes/s
(d) 24.58×10^3 bytes/s

Scanned with CamScanner

Solutions

01. Ans: (d)

Sol: Disk rotation speed = 2400 rpm

2400 rotations – 60 sec

40 rotations – 1sec ----- (1)

40×62500 bits – 1 sec

2500×10^3 – 1 sec

$\Rightarrow 2.5 \times 10^6$ bits – 1 sec

$\Rightarrow$ Data transfer rate = 2.5 MIPS

from (1) 40 rotations – 1 sec

1 rotation – $\frac{1000}{40} m\sec$

(latency)L = 25 msec

$\Rightarrow$ Avg Latency $= \frac{L}{2} = 12.5$ msec

02. Ans: (a)

Sol: Basic unit of data transfer is a sector

$\therefore$ Sector size $= \frac{\text{Total disk capacity}}{\text{Total Number of sectors}}$

$= \frac{9.09 \text{ GB}}{17,755,614} = 512$ Bytes

03. Ans: (a)

Sol: Number of tracks $= \frac{4\text{cm}}{0.1\text{cm}}$

Number of surfaces S = 8

Number of sectors/track = 20

Sector size B = 4000 B

$\Rightarrow$ Capacity $= 8 \times 40 \times 20 \times 4000$ B

$= 25.6$ MB

04. Ans: (d)

Sol: 1 track = 20 * 4000 Bytes

3600 rotations $\rightarrow$ 60 sec

60 rotations $\rightarrow$ 1 sec

$60 \times 20 \times 4000$ Bytes $\rightarrow$ 1 sec

$= 4.8$ MB $\rightarrow$ 1 sec

$\therefore$ Data transfer rate = 4.8 MBPS

05. Ans : (b)

06. Ans: (b)

Sol: iv < i < iii (theoretical)

always transfer time < latency time < seek time

07. Ans: (b)

Sol: Unit data transfer = 1 sector size

One sector size $= \frac{\text{1 Track capacity}}{\text{Total number of sectors}}$

$= \frac{62500}{1024}$ bits $\cong 8$ Bytes

08. Ans: (d)

Sol: rpm = 2400

rps $= \frac{2400}{60} = 40$

1 Rotation takes = 25 ms

$\therefore$ Average latency = 12.5 ms

09. Ans: (a)

10. Ans: (c)

11. Ans: (c)

Scanned with CamScanner

12. Ans: (c)

13. Ans: (c)

14. Ans: (b)

15. Ans: (c)

16. Ans: (b)

Sol: seek time = 25 ms

Latency = 8 ms

Disk transfer rate = 1 msec/ 1 kByte

∴ Total disk transfer rate is 2msec/2kB

O.S overhead is 2 msec/ 2kB ÷ 10 ms

∴ Total time needed to retrieve a block of 2Kbytes = 25 ÷ 8 ÷ 2 ÷ 2 ÷10 = 47 ms

17. Ans: (b)

Sol: Capacity of Hard disk = C × h × S × B

Where, C = number of cylinders;

h = number of surfaces

S = number of sectors

B = size of one sector

Number of platters = 16

So, number of surfaces = 16× 2 = 32

$= 2^{10}\times2^{5}\times2^{7}\times2^{9}$ Bytes

$= 2^{31}$Bytes = 2 GB

18. Ans: (a)

Sol: Data Transfer rate = Number of bytes/sec

RPM = 3000

∴ In one second it completes 50 tracks

∴ 50 Tracks Capacity is

$50 \times 2^{9} \times 2^{10}B = 5 \times 2^{20}B$ = 5 MBPS

19. Ans: (b)

Sol: One track size

= Number of Sectors per track* sector size

= 400 sectors * 512 Bytes/sector

= 400 * 512 Bytes

Rotational speed = 7200 RPM

7200 Revolution → 1 min

One Revolution → $\frac{60\,\text{sec}}{7200}$

$\rightarrow \frac{1}{120}$sec

Data transfer rate $= \frac{\text{One track size}}{\text{One revolution time}}$

$= \frac{400 * 512\,\text{Byte}}{\frac{1}{120}\,\text{sec}}$

= (400*512*120)Bytes/sec

$= 24576 * 10^{3}$ Bytes/sec

$= 24.58 * 10^{6}$ Bytes/sec

Scanned with CamScanner

Digital Logic

Scanned with CamScanner

Chapter 1 Number Systems

01. In the following series the same integer is expressed in different number system 10000, 121, 100, ?, 24, 22, 20, ... The missing number of the series is

(a) 23 (b) 32
(c) 31 (d) 13

02. In a digital computer binary subtraction is performed

(a) In the same way we perform subtraction in decimal number system
(b) Using two's complement method
(c) Using 9's complement method.
(d) Using 10's complement method.

03. The smallest negative number which can be stored in a computer that has 8-bit word length and uses 2's complement arithmetic is

(a) –256 (b) –255
(c) –128 (d) –127

04. Match List – I with List – II and select the ***correct*** answer using the codes given below the Lists:

List – I	List – II
A. 55	1. 1 0 1 0 0 0 0 0
B. 120	2. 1 1 0 1 1 1 0 0
C. 160	3. 0 1 1 1 1 0 0 0
D. 220	4. 0 0 1 1 0 1 1 1
	5. 1 0 1 0 1 1 0 1

Codes:

	A	B	C	D
(a)	3	4	5	2
(b)	4	3	1	2
(c)	4	3	5	2
(d)	3	4	2	1

05. The minimum decimal equivalent of the number $(11B)_x$ is

(a) 163 (b) 167
(c) 168 (d) 169

06. F's complement of $(2BFD)_{hex}$ is

(a) E304 (b) D403
(c) D402 (d) C403

07. A number is expressed in binary two's complement as 10011. Its decimal equivalent value is

(a) 19 (b) 13
(c) –19 (d) –13

08. $(46)_8$ is expressed in Gray code as which one of the following?

(a) 110001 (b) 101000
(c) 110101 (d) 111110

09. The number of one's present in the binary representation of

$15 \times 256 + 5 \times 16 - 3$ are

(a) 8 (b) 9
(c) 10 (d) 11

Scanned with CamScanner

10. Find the value of x and y in the following equation

$$\sqrt{(4425)_x + (1750)_y} = (40)_x + (25)_y$$

(a) 5, 8 (b) 6, 9
(c) 6, 8 (d) 7, 8

11. Find the value of x in the following equation $(21)_x = \log_2 (11202)_x$

(a) 4 (b) 3
(c) 6 (d) 5

12. Find the result in 2's complement form of the following

$$(1211)_4 + (1121)_3$$

(a) 10110000 (b) 11110000
(c) 01111000 (d) 01110000

13. Express –73.75 in 12 bit 2's complement form

(a) 11110110.0100 (b) 10110110.0100
(c) 01110110.0100 (d) 00110110.0100

14. What is the resultant of $(C4)_{16} - (7B)_{16} = ?$

(a) $(59)_{16}$ (b) $(39)_{16}$
(c) $(69)_{16}$ (d) $(49)_{16}$

15. The given arithmetic operation is correct in at least one number system. Determine the base in the operation $\frac{302}{20} = 12.1$

(a) 2 (b) 10
(c) 6 (d) 4

16. What is the equivalent Hexadecimal representation of $(10110010)_{gray}$?

(a) $(AB)_{16}$ (b) $(BC)_{16}$
(c) $(DC)_{16}$ (d) $(CA)_{16}$

17. What is the addition of $(32)_{10}$ and $(76)_8$?

(a) $(94)_{10}$ (b) $(60)_{16}$
(c) $(77)_8$ (d) $(10011100)_2$

Scanned with CamScanner

Solutions

01. Ans: (c)

Sol: 10000, 121, 100, ? , 24, 22, 20

$(10000)_2 = 1\ \ 0\ \ 0\ \ 0\ \ 0 = 16$

$2^4\ \ 2^3\ \ 2^2\ \ 2^1\ \ 2^0$

$(121)_3 = 16$

$(100)_4 = 16$

$(31)_5 = 16$

$(24)_6 = 16$

$(22)_7 = 16$

$(20)_8 = 16$

02. Ans: (b)

03. Ans: (c)

Sol: 2's complement range $= +(2^{n-1}-1)$ to $-(2^{n-1})$

$\therefore$ For n = 8 bit $-(2^{8-1}) = -128$.

04. Ans: (b)

Sol: A. $(55)_{10} = 00110111 \rightarrow 4$

B. $(120)_{10} = 01111000 \rightarrow 3$

C. $(160)_{10} = 10100000 \rightarrow 1$

D. $(220)_{10} = 11011100 \rightarrow 2$

05. Ans: (b)

Sol: $(11B)_x = 1x^2 + 1x^1 + 11\,x^0$

$= x^2 + x + 11$

Base x must be greater than B (i.e., $(11)_{10}$).

Hence the minimum decimal no. must be when x = 12.

$12^2 + 12^1 + 11 = 167$

$(11\,B)_{(12)} = (167)_{(10)}$

06. Ans: (c)

Sol: To get F's complement of given hexadecimal number subtracts every digit of given hexadecimal number from F

F F F F

2 B F D

D 4 0 2

F's complement is D402

07. Ans: (d)

Sol: Given 10011 in binary two's complement form. Its binary equivalent is expressed as

signbit ↓ Magnitude

1 0011

0011

− 0001

0010

Complement of 0010 is 1101

Answer is −13.

08. Ans: (c)

Sol: $(46)_8 = 100110_2 = 110101$ (in gray code)

09. Ans: (a)

Sol: $(15\times256) + (5\times16) - 3\times16^0$

$(15\times16^2) + (5\times16) - 3\times16^0$

$F50 - 003 = (F4D)_{16}$

$= (1111\ 0100\ 1101)_2$

1111 0100 1101

Number of one's present in the binary = 8

10. Ans: (c)

Sol: $(4x^3 + 4x^2 + 2x + 5) + (y^3 + 7y^2 + 5y)$

$= (4x + 2y + 5)^2$

x = 6, y = 8 satisfying the above relation

Scanned with CamScanner

11. Ans: (b)

Sol: $2x+1 = \log_2 (x^4 + x^3 + 2x^2 + 2)$

$x^4 + x^3 + 2x^2 + 2 = (2)^{2x+1}$

$x = 3$ satisfies the above relation

12. Ans: (d)

Sol: $(1211)_4 + (1121)_3 = (144)_{10}$

$(144)_{10} = (10010000)_2$

2's complement of 10010000

$= 01110000$

13. Ans: (b)

Sol: Positive expression for given number

$= 01001001.1100$

1's Complement of it $= 10110110.0011$

Add 1 $\quad +1$

10110110.0100

14. Ans: (d)

Sol: $(C4)_{16} = 11000100$

$-(7B)_{16} = +10000101$ (2's Complement)

01001001

(ignore carry, Ans +ve) $= (49)_{16}$

15. Ans: (d)

Sol: Assume base is 'b' then

$$\frac{3b^2+2}{2b} = b + 2 + \frac{1}{b}$$

Solving for 'b', we get $b = 4$.

16. Ans: (c)

Sol: $(10110010)_{gray} = (11011100)_2$

$= (DC)_{16}$

17. Ans: (a)

Sol: $(76)_8 = (62)_{10}$

$(62)_{10} + (32)_{10} = (94)_{10}$

Scanned with CamScanner

Chapter 2 Boolean Algebra, Logic Gates & K-Maps

01. What Boolean function does the following circuit represent?

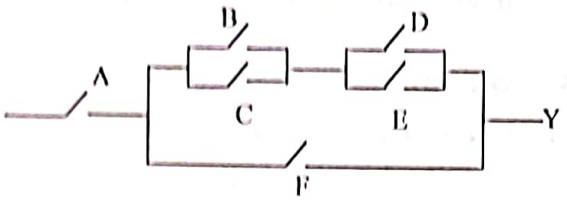

(a) $A[F + (B + C)(D + E)]$
(b) $A + BC + DE + F$
(c) $A(B + C) + A(D + E) + F$
(d) None of these

02. The initial output of the following circuit is 1. If we apply 010101 at input A (first bit is zero) then what is the bit pattern generated at the output Y?

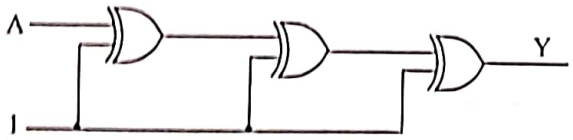

(a) 010101 (b) 101010
(c) remains at 0 (d) remains at 1

03. The complement of the function $F = (A + \overline{B})(\overline{C} + D)(\overline{B} + C)$ is _____

(a) $\overline{A}B + C\overline{D} + B\overline{C}$
(b) $A\overline{B} + \overline{C}D + \overline{B}C$
(c) $A\overline{B} + C\overline{D} + BC$
(d) $AB + BC + CD$

04. The output of the circuit shown in fig. is equal to

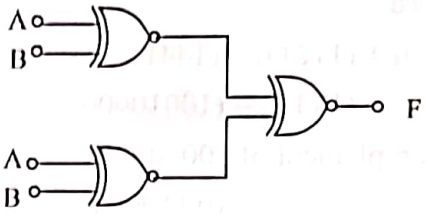

(a) 0 (b) 1
(c) $\overline{A}B + A\overline{B}$ (d) $\overline{(A*B)} * \overline{(A*B)}$

05. If $F(A, B, C) = AB + AC + BC$ then $F(\overline{A}, \overline{B}, C).F(\overline{A}, B, \overline{C}).F(A\overline{B}\,\overline{C}) = ?$

(a) $\overline{A}\,\overline{B}\,\overline{C}$ (b) $\overline{A} \oplus \overline{B} \oplus \overline{C}$
(c) $\overline{A} \oplus \overline{B} \odot \overline{C}$ (d) $\overline{A} + \overline{B} + \overline{C}$

06. Given $\overline{AB} + \overline{A}B = C$, find $\overline{AC} + \overline{A}C$

(a) $\overline{A} + B$ (b) $A + \overline{B}$
(c) $\overline{A} + \overline{B}$ (d) A+B

07. If $\overline{xy} = 0$ then which one of the following is true ?

(a) $\overline{x}\,\overline{y}\,\overline{z} + xyz = xy\overline{z} + \overline{x}\,\overline{y}\,\overline{z}$
(b) $\overline{x}y = 1$
(c) $\overline{xy} + \overline{y}x + xz = x\overline{y} + yz$
(d) $\overline{x}y + \overline{y}x = xy + \overline{xy}$

Scanned with CamScanner

08. The minimum number of 2 input NAND gates required to implement the following Boolean function $f = (\overline{x} + \overline{y})(z + w)$

(a) 3 (b) 4

(c) 5 (d) 6

09. A circuit which is working as NAND gate with positive level logic system will work as ____ gate with negative level logic system.

(a) NAND (b) NOR

(c) AND (d) OR

10. The minimum number of two input NOR gates are required to implement the simplified value of the following equation

$f(w, x, y, z) = \Sigma m(0, 1, 2, 3, 8, 9, 10, 11)$

(a) One

(b) Two

(c) Three

(d) Four

11. **Assertion (A):** XOR gate is not a universal gate.

Reason (R) : It is not possible to realize any Boolean function using only XOR gates.

12. What is the minimized expression of

$F = \overline{X}\,\overline{Z} + \overline{Y}\,\overline{Z} + Y\overline{Z} + XYZ$?

(a) $\overline{X}Y + Z$

(b) $XYZ + \overline{Z}$

(c) $\overline{XY} + Z$

(d) $\overline{Z} + XY$

13. Let $f(A, B) = A + B$, simplified expression for function $f(f(x + y, y), z)$ is

(a) $x + y + z$ (b) xyz

(c) $xy + z$ (d) 1

14. The sum of all the min terms of a given Boolean function is equal to _____.

(a) zero

(b) one

(c) two

(d) complement of the function

15. The product of all the max terms of a given Boolean function is always equal to

(a) Two

(b) Complement of the function

(c) One

(d) Zero

16. In a n – variable K–map combining 16 cells containing 1's as a single group will results a term of _____ literals

(a) 4 (b) n – 4

(c) n + 4 (d) 4n

17. What is the other canonical form of the given equation?

$F(x,y,z) = \Sigma m(0,1,2,3,4,5,6,7)$

(a) $F(x,y,z) = \prod M(0,1,2,3,4,5,6,7)$

(b) $F(x,y,z) = \prod m(0,1,2,3,4,5,6,7)$

(c) $F(x,y,z) = \prod M(0,1,2,3,4,5,6,7)$

(d) Does not exist

Scanned with CamScanner

18. The simplified SOP form of the K – map shown below is

ab \ cd	00	01	11	10
00	1	1	×	1
01	0	0	0	0
11	0	1	1	0
10	1	×	×	1

(a) $ad + \bar{b}$ (b) $\bar{a}\bar{b} + ab$

(c) $\bar{a}\bar{b} + ab + ad$ (d) $a\bar{b} + \bar{a}b + ad$

19. How many essential prime implicants are present in the Karnaugh Map shown in figure

ab \ cd	00	01	11	10
00		1	1	1
01		1	1	
11			1	
10			1	

(a) Two (b) Three

(c) Four (d) Five

20. Maximum number of prime implicants with n binary variables in the reduced expression is__.

(a) 2^n (b) 2^{2^n}

(c) 2^{n-1} (d) $2^{2^{n-1}}$

21. The Boolean function

$f(w, x, y, z) = \sum m(5,7,9,11,13,15)$

is independent of variables

(a) w (b) x

(c) y (d) z and x

22. The simplified Boolean equation is_____

X \ YZ	00	01	11	10
0	1	0	1	0
1	0	1	0	1

(a) $X \oplus Y \oplus Z$ (b) $X \oplus Y \odot Z$

(c) $X \odot Y \odot Z$ (d) $X \odot Y \oplus Z$

Common Data for Questions 23 & 24

The function

$f(A, B, C, D) = \Sigma m(0, 1, 4, 6, 7, 8, 10, 14, 15)$.

23. The number of prime implicants and essential prime implicants are

(a) 6, 1 (b) 6, 2

(c) 7, 1 (d) 7, 2

24. Prime implicant set is

(a) $\{BC, \bar{A}\bar{C}\bar{D}, \bar{A}\bar{B}\bar{C}, A\bar{B}\bar{D}, AC\bar{D}, A\bar{C}D\}$

(b) $\{BC, \overline{ABC}, \overline{ABD}, A\bar{B}\bar{D}, AC\bar{D}, \bar{B}\bar{C}\bar{D}\}$

(c) $\{BC, AC\bar{D}, A\bar{B}\bar{D}, \bar{A}\bar{C}\bar{D}, \bar{A}\bar{B}\bar{C}, \overline{ABD}, \overline{BCD}\}$

(d) $\{BC, A\bar{C}\bar{D}, A\bar{B}\bar{D}, AC\bar{D}, \bar{A}\overline{BC}, \overline{ABD}, \bar{B}\bar{C}\bar{D}\}$

25. To implement the simplified value of the following Boolean function, minimum of how many AND, NOT and OR gates are required?

$f(A,B,C,D) = \bar{A} + A\bar{C} + \bar{A}\bar{B}C + AB\bar{C}D + ABCD$

Scanned with CamScanner

(a) One 3-input OR gate , One 2-input AND and two NOT gates
(b) One 3-input OR gate, Two 2-input AND and two NOT gates
(c) Two 3-input OR gate, One 2-input AND and one NOT gates
(d) One 3-input OR gate, One 2-input AND and one NOT gates

26. In K–map simplification, combining eight adjacent ones as a group leads a term with -
(a) One literal less than the total number of variables
(b) Two literals less than the total number of variables
(c) Three literals less than the total number of variables
(d) Four literals less than the total number of variables

27. The logic expression
$Y = \Sigma m(0, 3, 6, 7, 10, 12, 15)$ is equivalent to
(a) $Y = \pi M(0, 3, 6, 7, 10, 12, 15)$
(b) $Y = \pi M(1, 2, 4, 5, 8, 9, 11, 13, 14)$
(c) $Y = \Sigma m(1, 2, 4, 5, 8, 9, 11, 13, 14)$
(d) $Y = \Sigma m(3, 0, 10, 12)$

28. Pick up *correct* statements from the following:
1. In an n–variable k–map combining 16 adjacent cells containing 1's as a single group will generate a prime implicant which is independent of four variables.
2. D–latch cannot be implemented with multiplexer circuit.
3. Lockout problem occurs only in ripple counters.
4. The minimum size of ROM required to implement 3–bit binary to gray / Gray to binary code converter is $2^3 \times 3$.
5. Minimum number of NOR gates (2 - input) required to implement half Subtractor circuit are five.

(a) 1, 2, 3 (b) 2, 3, 4
(c) 1, 4, 5 (d) 3, 4, 5

29. How many Boolean functions of the type $f(x, y, z) = f(\bar{x}, \bar{y}, \bar{z})$ are available with three variables ?
(a) 4 (b) 8
(c) 32 (d) 16

30. Consider the logic circuit shown in figure.

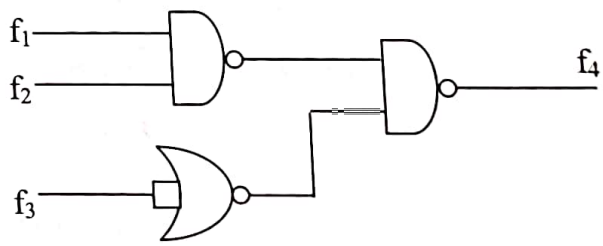

The functions f_1, f_2 and f_4 are
$f_1(w, x, y, z) = \Sigma m(8, 9, 10)$
$f_2(w, x, y, z) = \Sigma m(7, 8, 12, 13, 14, 15)$
$f_4(w, x, y, z) = \Sigma m(8,9)$

Then $f_3(w, x, y, z)$ is
(a) $\Sigma m(9, 10)$ (b) $\Sigma m(9)$
(c) $\Sigma m(1, 8, 9)$ (d) $\Sigma m(8, 10, 15)$

Scanned with CamScanner

31. How many minimum number of NAND gates are required to implement the following Boolean equation, by taking inputs as A, B, C, D, E, F

$$F = \overline{A}C + \overline{D}F + \overline{B}C + \overline{E}F$$

(a) 4
(b) 5
(c) 6
(d) 7

32. Find the number of prime implicants, Essential prime implicants, and minimized expression is

$$F(A, B, C, D) = \sum m\,(0, 2, 5, 9, 15) + \sum d\,(6, 7, 8, 10, 12, 13)$$

(a) 3, 3, $\overline{B}\,\overline{D} + A\overline{C} + BD$
(b) 4, 3, $\overline{B}\,\overline{D} + A\overline{C} + BD$
(c) 4, 4, $B\overline{D} + A\overline{C} + \overline{B}D$
(d) 3, 4, $B\overline{D} + A\overline{C} + \overline{B}D$

33. What is the value of $A + \overline{A}B$?

(a) A
(b) B
(c) 0
(d) A+B

Scanned with CamScanner

Solutions

01. Ans: (a)

Sol: Y= A [F+ (B+C)(D+E)]

02. Ans: (b)

Sol: $A \oplus 1 = \overline{A}$ and $\overline{A} \oplus 1 = A$ then

The final output is $F = \overline{A}$

The i/p is 0 1 0 1 01,

Then the o/p is 101010

03. Ans: (a)

Sol: $F = (A+\overline{B})(\overline{C}+D)(\overline{B}+C)$

Using Demorgan's Law

Complement of

$$F = \overline{F} = \overline{(A+\overline{B})(\overline{C}+D)(\overline{B}+C)}$$

$$\overline{F} = \overline{(A+\overline{B})} + \overline{(\overline{C}+D)} + \overline{(\overline{B}+C)}$$

$$\overline{F} = \overline{A}B + C\overline{D} + B\overline{C}$$

04. Ans: (b)

Sol:

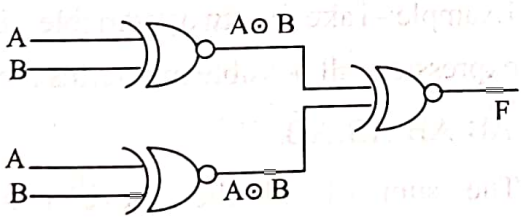

$$F = (A \odot B)(A \odot B) + (A \oplus B)(A \oplus B)$$

$$= (A \odot B) + (A \oplus B)$$

$$= \overline{(A \oplus B)} + (A \oplus B) = 1$$

Similar inputs to an XNOR gate results in one (logic '1') output.

05. Ans: (a)

Sol: F(A, B, C) = AB+AC+BC

$$F(\overline{A},\overline{B},C) = \overline{A}\,\overline{B} + \overline{A}C + \overline{B}C$$

$$F(\overline{A},B,\overline{C}) = \overline{A}B + \overline{A}\,\overline{C} + B\overline{C}$$

$$F(A,\overline{B},\overline{C}) = A\overline{B} + A\overline{C} + \overline{B}\,\overline{C}$$

$$F(\overline{A}\,\overline{B}C)F(\overline{A}B\overline{C})F(A\overline{B}\,\overline{C})$$

$$= (\overline{A}\,\overline{B} + \overline{A}C + \overline{B}C)(\overline{A}B + \overline{A}\,\overline{C} + B\overline{C})(A\overline{B} + A\overline{C} + \overline{B}\,\overline{C})$$

$$= (0 + \overline{A}\,\overline{B}\,\overline{C} + 0 + \overline{A}BC + 0 + 0 + 0 + 0 + 0)$$

$$(A\overline{B} + A\overline{C} + \overline{B}\,\overline{C})$$

$$= (\overline{A}\,\overline{B}\,\overline{C} + \overline{A}BC)(A\overline{B} + A\overline{C} + \overline{B}\,\overline{C})$$

$$= (0+0+\overline{A}\,\overline{B}\,\overline{C} + 0 + 0 + 0) = \overline{A}\,\overline{B}\,\overline{C}$$

06. Ans: (a)

Sol: $\overline{AC} + \overline{A}C = \overline{A.(\overline{AB} + \overline{A}B)} + \overline{A}(\overline{AB} + \overline{A}B)$

$$= \overline{A(\overline{A} + \overline{B} + \overline{A}B)} + \overline{A}(\overline{A} + \overline{B} + \overline{A}B)$$

$$= \overline{A}\,\overline{B} + \overline{A}[\overline{A}[1+B] + \overline{B}]$$

$$= \overline{A} + B + \overline{A} + \overline{A}\,\overline{B}$$

$$= \overline{A} + \overline{A}\,\overline{B} + B = \overline{A}(1+\overline{B}) + B$$

$$= \overline{A} + B$$

07. Ans: (c)

Sol: $\overline{xy} = 0, \Rightarrow \overline{x} + \overline{y} = 0$ then x = 1, y = 1

Consider third expression

$$\overline{xy} + x\overline{y} + xz = x\overline{y} + yz$$

$$\overline{xy} = 0, x\overline{y} + xz = x\overline{y} + yz$$

$$x(\overline{y} + z) = x\overline{y} + yz$$

Satisfying LHS = RHS

when x = 1, y = 1, z = z

Scanned with CamScanner

08. Ans: (b)

Sol: $f = (\bar{x} + \bar{y})(z + w)$

$f = \overline{xy}(z + w)$

$f = \overline{xy}.z + \overline{xy}.w$

$f = \overline{\overline{\overline{xy}.z}\;\;\overline{\overline{xy}.w}}$

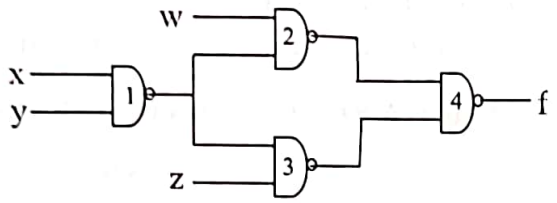

09. Ans: (b)

Sol:

A	B	$\overline{AB}$ (+velogic)	AB(–velogic)
H	H	H	L
H	L	H	L
L	H	H	L
L	L	L	H

NAND gate with positive level logic is same as NOR Gate with negative level logic

10. Ans: (a)

Sol: $F(w, x, y, z) = \sum m(0, 1, 2, 3, 8, 9, 10, 11)$

wx \ yz	00	01	11	10
00	1	1	1	1
01				
11				
10	1	1	1	1

$F = \bar{x}$

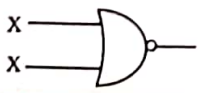

$\overline{(x + x)} = \bar{x}$

One NOR gate is required.

11. Ans: (a)

Sol: EX-OR gate is not a universal gate because of this reason it is not possible to realize any Boolean function using only XOR gates.

12. Ans: (d)

Sol: $F = \bar{X}\bar{Z} + \bar{Z}(Y + \bar{Y}) + XYZ$

$= \bar{X}\bar{Z} + \bar{Z} + XYZ$

$= \bar{Z}[1 + \bar{X}] + XYZ$

$= \bar{Z} + XYZ$

$= \bar{Z} + XY$

13. Ans: (a)

Sol: $f(A, B) = A + B$

$f(f(x + y, y), z) = f(x + y, y) + z$

$= x + y + y + z$

$= x + y + z$

14. Ans: (b)

Sol: The sum of all the min terms of a given Boolean function is equal to 1.

Example:-Take a two variable Boolean expression, all possible min terms are $\overline{A}\overline{B}, A\overline{B}, AB, \overline{A}B$.

The sum of all the above min terms

$f(A,B) = AB + \overline{A}\overline{B} + \overline{A}B + A\overline{B}$

$= A(B + \overline{B}) + \overline{A}(B + \overline{B})$

$= A + \overline{A} = 1$

15. Ans: (d)

Sol: The product of all max terms of a given Boolean function is always equal to zero.

Scanned with CamScanner

16. Ans: (b)

Sol: Let us consider a 5 variable k – map.

5 variable k–map consists 32 cells. The group of 16 cells containing 1's results a term of '1' literal.

17. Ans: (d)

Sol: Given canonical form

$F(x,y,z) = \Sigma m(0,1,2,3,4,5,6,7)$ in the given expression all the min terms are covering. The relation between min terms and max terms is $m_j = \overline{M_j}$

The max term canonical form does not exist.

18. Ans: (a)

Sol:

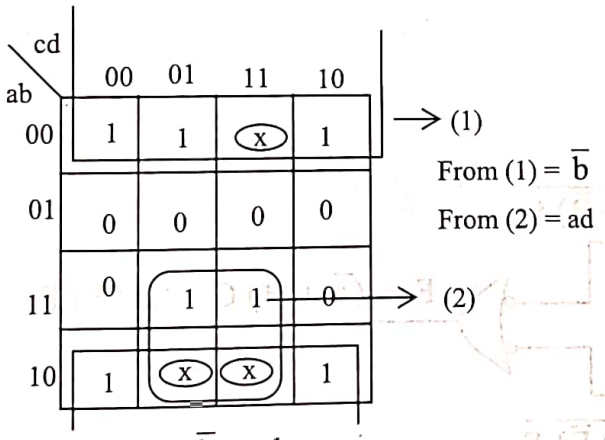

$F = \overline{b} + ad$

19. Ans: (b)

Sol:

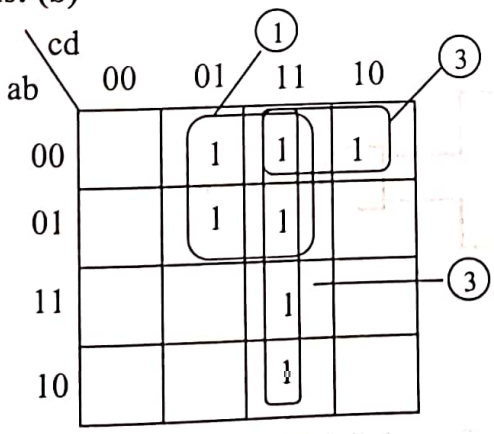

3 Essential Prime Implicants.

20. Ans: (c)

21. Ans: (c)

Sol: $f = \sum(5,7,9,11,13,15)$

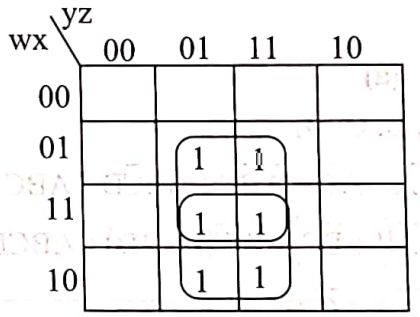

F = wz + xz, solution is independent of y

22. Ans: (b) & (d)

Sol:

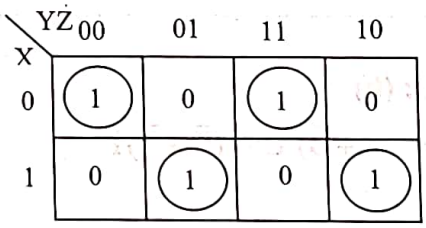

$$F = \overline{X}\overline{Y}\overline{Z} + \overline{X}YZ + X\overline{Y}Z + XY\overline{Z}$$

$$= \overline{X}(\overline{Y}\overline{Z} + YZ) + X(\overline{Y}Z + Y\overline{Z})$$

$$= \overline{X}(\overline{Y \oplus Z}) + X(Y \oplus Z)$$

$$F = X \odot Y \oplus Z$$

Similarly option (b) also.

23. Ans: (d)

Sol:

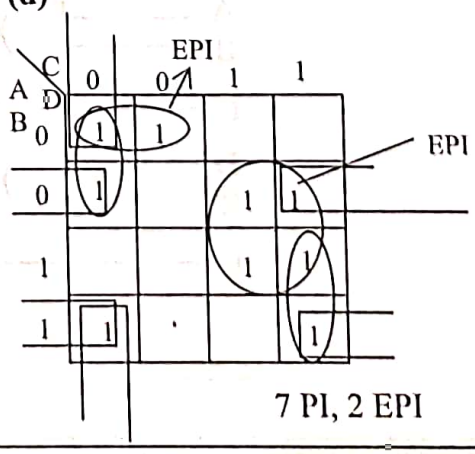

7 PI, 2 EPI

Scanned with CamScanner

24. Ans: (c)

Sol: Prime implicant set is

$[BC, AC\overline{D}, A\overline{B}\overline{D}, \overline{A}\overline{C}\overline{D}, \overline{A}\overline{B}\overline{C}, \overline{A}B\overline{D}, \overline{B}\overline{C}\overline{D}]$

25. Ans: (a)

Sol: f (A, B, C, D)

$$= \overline{A} + A\overline{C} + \overline{A}\overline{B}C + AB\overline{C}D + ABCD$$

$$= \overline{A}(1+\overline{B}C) + A\overline{C}(1+BD) + ABCD$$

$$= \overline{A} + A\overline{C} + ABCD$$

$$= \overline{A} + \overline{C} + ABCD = \overline{A} + \overline{C} + ABD$$

$$= \overline{A} + BD + \overline{C}$$

26. Ans: (c)

27. Ans: (b)

Sol: $m_i = \overline{M_i}$

$Y = \Pi M\ (1, 2, 4, 5, 8, 9, 11, 13, 14)$

28. Ans: (c)

29. Ans: (d)

Sol: Total number of Boolean expression's =16

30. Ans: (b)

Sol: $f_4 = f_1 . f_2 + f_3$

31. Ans: (b)

Sol: $F = (\overline{A}+\overline{B})\,C + (\overline{D}+\overline{E})F$

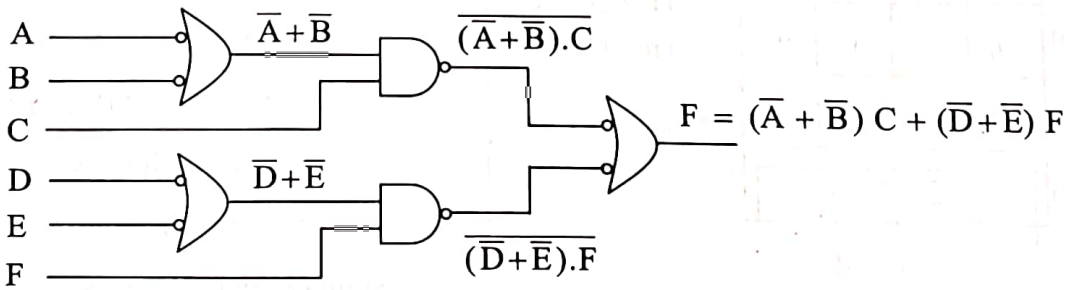

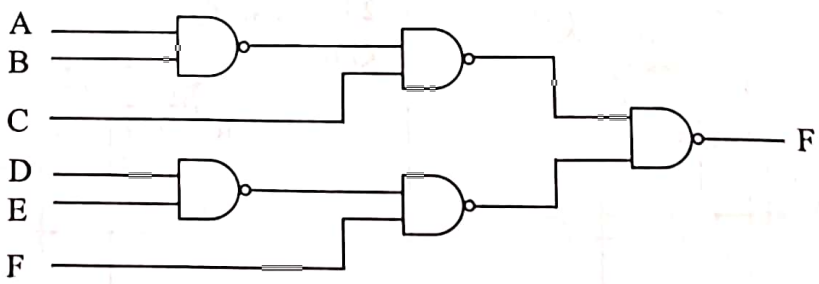

Scanned with CamScanner

32. Ans: (a)

Sol:

AB \ CD	00	01	11	10
00	1			1
01		1	X	X
11	X	X	1	
10	X	1		X

$= \overline{B}\,\overline{D} + A\overline{C} + BD$

33. Ans: (d)

Sol: $A + \overline{A}B = A + B$

Scanned with CamScanner

Chapter 3 Combinational Circuits

01. What is the expression for difference, borrow of full subtractor circuit

(a) Diff = $A \oplus B \oplus C$, Borrow = $\overline{A}C + (A \odot B)C$

(b) Diff = $A \oplus B \oplus C$, Borrow = $\overline{A}B + \left(\overline{A \oplus B}\right) \cdot C$

(c) Diff = $A \odot B \odot C$, Borrow = $\overline{A}B + \overline{(A \odot B)}\, C$

(d) Diff = $A \odot B \odot C$, Borrow = $\overline{A}C + (A \odot B)\, C$

02. If ABCD is the four bit binary code, then what is the code generated at the output terminals WXYZ ?

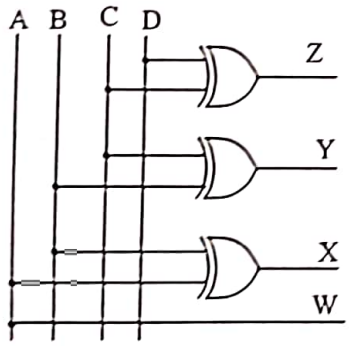

(a) BCD code (b) Excess – 3 code

(c) 8 4 2 1 code (d) Gray code

03. Match the following

List – I

P. Minimum number of NAND gates required to realize Ex-NOR gate.

Q. 4 – bit Binary adder can be implemented with minimum of how many half adders and OR gates.

R. Combinational digital circuit

S. Sequential digital circuit

List – II

1. Seven Half – Adders and 3 OR gates
2. Five NAND gates
3. Four NAND gates
4. Eight half adders and four OR gates
5. Serial Adder
6. EEPROM

Codes:

	P	Q	R	S
(a)	2	1	6	5
(b)	1	2	5	6
(c)	3	1	2	5
(d)	2	3	4	5

Linked Answer Questions 04 & 05

Consider the combinational circuit shown below

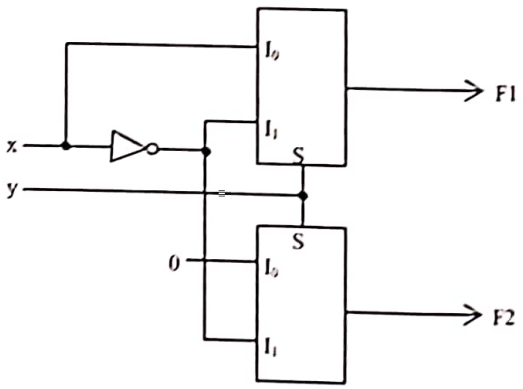

04. What is the circuit shown in figure?

(a) Full Adder

(b) Full Subtractor

(c) Half Adder

(d) Half Subtractor

Scanned with CamScanner

05. Minimum number of NAND gates required to implement above circuit is _____.

(a) 5 (b) 4 (c) 3 (d) 2

06. A digital circuit which compares two numbers $A_3 A_2 A_1 A_0$, $B_3 B_2 B_1 B_0$ is shown in figure. To get output $Y = 0$, choose one pair of *correct* input numbers

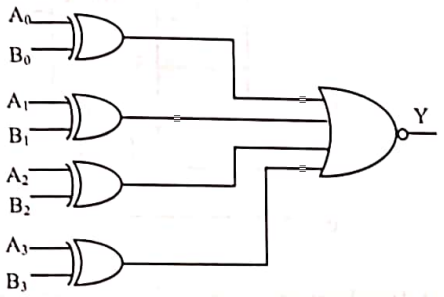

(a) 1010, 1010 (b) 0101, 0101
(c) 0010, 0010 (d) 0010, 1011

07. Which one of the following statement is **true**?

(a) Excess–3 code is self complementary code because of 2's complement of excess–3 code is 9's complement of given BCD number.

(b) Excess–3 code is self complementary code because of 1's complement of excess–3 code is 9's complement of given BCD number is 1's complement form.

(c) Excess–3 code is self complementary code because of 1's complement of excess–3 code is 9's complement of given BCD number is 2's complement form.

(d) Excess–3 code is self complementary code because of 1's complement of given BCD number Excess–3 code is 9's complement of given BCD number in Excess–3 form.

08. The logic circuit shown in the given figure can be minimized to

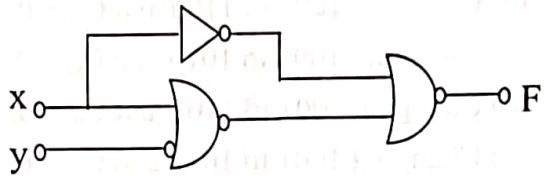

(a) 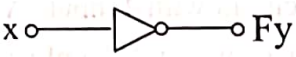

(b) 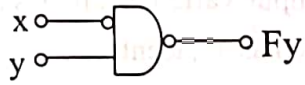

(c) 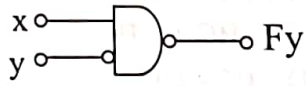

(d) 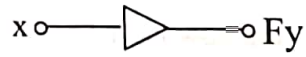

Common Data for Questions 09 & 10

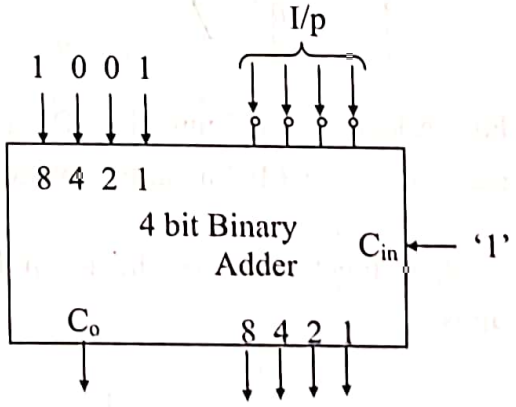

09. The above circuit is converting

(a) I/p No. to excess – 3 No.

(b) I/p No. to 2's complement No.

(c) I/p No. to 9's complement No.

(d) None

Scanned with CamScanner

10. Whatever the operation the circuit is performing, is possible to implement?
(a) Changing 1001 to 1100 and $C_{in} = 0$.
(b) Changing 1001 to 1010 and $C_{in} = 0$.
(c) Changing 1001 to 1101 and $C_{in} = 0$.
(d) Changing 1001 to 1011 and $C_{in} = 0$.

11. Design a logic circuit with 4 inputs A, B, C, D that will produce output '1' only whenever two adjacent input variables are 1's.A and D also to be treated as adjacent.
(a) $F = AC + AD + BD + AB$
(b) $F = \overline{A}C + \overline{A}D + AC + BD$
(c) $F = AB + AD + BC + CD$
(d) $F = \overline{A}B + \overline{A}D + BC + CD$

12. The circuit shown below is

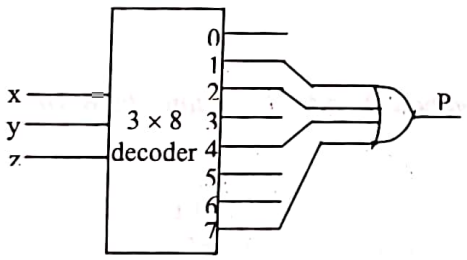

(a) Full Adder (b) 3 input Ex - OR gate
(c) Half Adder (d) 3 input Ex - NOR gate

13. The output function 'f' of the given logic circuit is

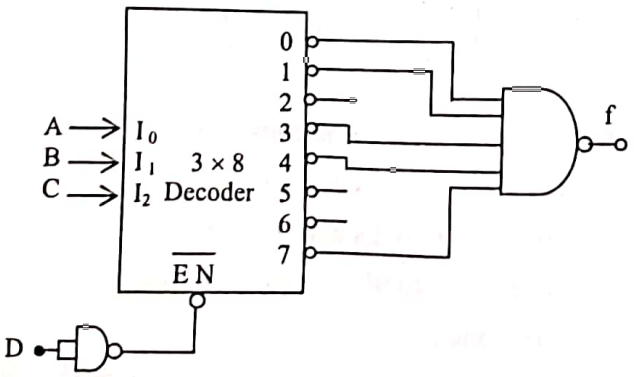

(a) $(A \odot C + \overline{A}\,\overline{C})D$ (b) $(B \odot C + \overline{A}\,\overline{B})D$
(c) $(B \oplus C + \overline{A}\,\overline{C})D$ (d) $(A \oplus B + \overline{A}\,\overline{B})D$

14. The following multiplexer circuit is equivalent to _____.

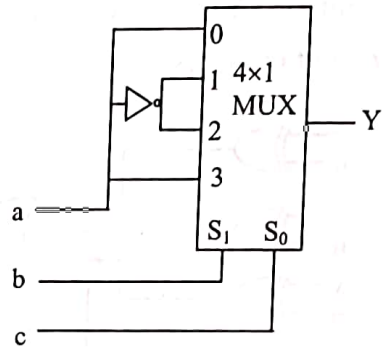

(a) Implementation of sum equation of full adder
(b) Implementation of carry equation of full adder
(c) Implementation of Borrow equation of full subtractor
(d) All the above

15. Identify the operation of circuit shown in figure.

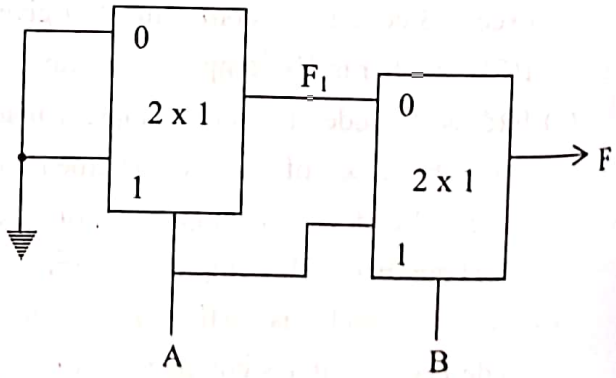

(a) $F = A \oplus B$ (b) $F = A + B$
(c) $F = A \odot B$ (d) $F = AB$

Scanned with CamScanner

16. The output equation of the following digital circuit is

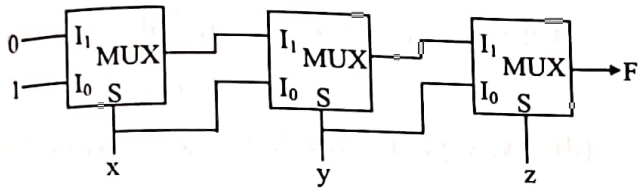

(a) $F(x, y, z) = \Sigma m(1, 2, 4, 7)$

(b) $F(x, y, z) = \Sigma m(2, 3, 4, 5)$

(c) $F(x, y, z) = \Sigma m(2, 5, 6, 7)$

(d) $F(x, y, z) = \Sigma m(1, 3, 5, 7)$

17. **Assertion (A) :** A demultiplexer can be used as decoder.

Reason (R) : A demux selects one of many outputs where as a decoder selects an output corresponds to the coded input.

Common Data for Questions 18 & 19

It is required to implement a 16×1 multiplexer.

18. The number of 2×1 multiplexers required to implement 16×1 is _____.

(a) 16 (b) 8

(c) 15 (d) 9

19. The number of 4×1 multiplexers required to implement 16×1 MUX.

(a) 5 (b) 4

(c) 3 (d) 8

Linked Answer Questions 20 & 21

Consider the combinational circuit shown below.

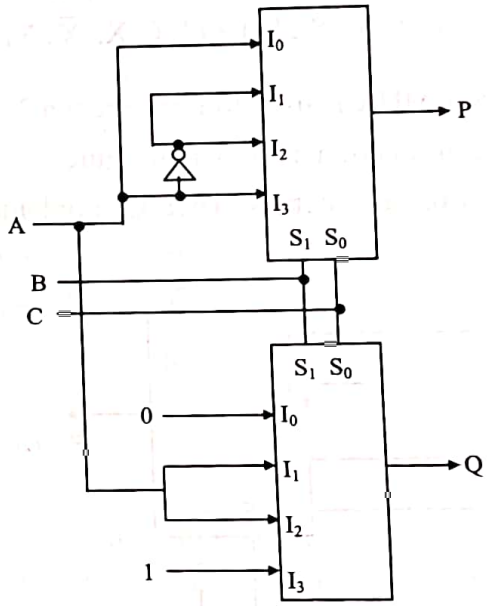

20. What is the circuit implemented in above diagram

(a) Full Adder (b) Full Subtractor

(c) Half Adder (d) Quarter Adder

21. Minimum number of two input NAND gates required to implement above circuit.

(a) 8 (b) 9 (c) 10 (d) 11

22. The Boolean equation $F(X, Y, Z) = \pi (2, 4, 7)$ is to be implemented using 4×1 multiplexer shown in figure. Which one of the following choices of inputs to multiplexer will realize the Boolean function?

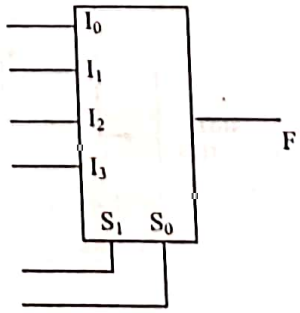

Scanned with CamScanner

(a) $(I_0, I_1, I_2, I_3, S_1, S_0) = (\overline{X}, 1, X, \overline{X}, Y, Z)$
(b) $(I_0, I_1, I_2, I_4, S_1, S_0) = (0, 1, \overline{X}, X, Y, Z)$
(c) $(I_0, I_1, I_2, I_4, S_1, S_0) = (1, 0, \overline{X}, X, \overline{Y}, Z)$
(d) $(I_0, I_1, I_2, I_3, S_1, S_0) = (1, 0, X, \overline{X}, Y, \overline{Z})$

23. A 4 × 1 MUX is used to implement a 3- input Boolean function as shown in figure.
The Boolean function F(A,B,C) implemented is

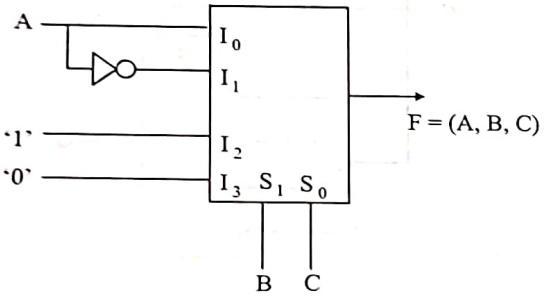

(a) F (A, B, C) = $\sum m(1, 2, 4, 6)$
(b) F (A, B, C) = $\sum m(1, 2, 6)$
(c) F (A, B, C) = $\sum m(2, 4, 5, 6)$
(d) F (A, B, C) = $\sum m(1, 5, 6)$

24. The function realized by the given multiplexer circuit is

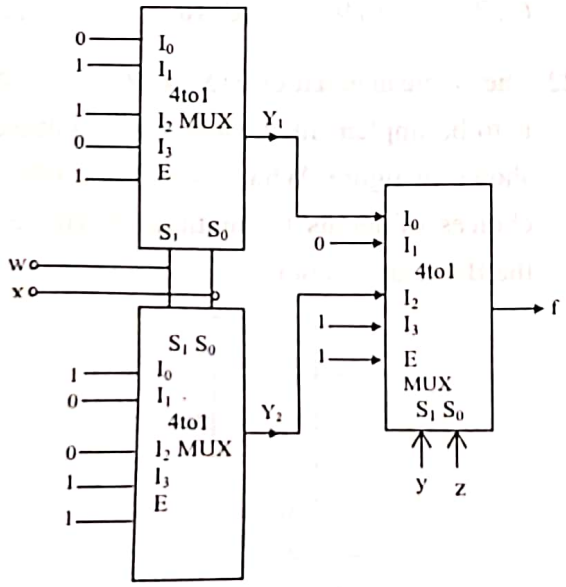

(a) f(w, x, y, z) = $\sum m(2, 3, 4, 7, 8, 11, 14, 15)$ +d(1, 10, 12)
(b) f(w, x, y, z) = $\sum m(2, 3, 4, 7, 8, 11, 14, 15)$
(c) f(w, x, y, z) = $\pi M(2, 3, 4, 7, 8, 11, 14, 15)$ .d(1, 10, 12)
(d) f(w, x, y, z) = $\pi M(2, 3, 4, 7, 8, 11, 14, 15)$

25. Minimum size of ROM required to implement following set of Boolean equations is

F_1 (w,x,y,z) = $\sum m(0,1,2,5,7,12,13,15)$
F_2 (w,x,y,z) = $\sum m(0,5,6,9,13,15)$
F_3 (w,x,y,z) = $\sum m(6,7,9,12,14,15)$

(a) 16 × 4 (b) 16 × 3
(c) 16 × 8 (d) 16 × 12

26. Identify the output equations for the following circuit.

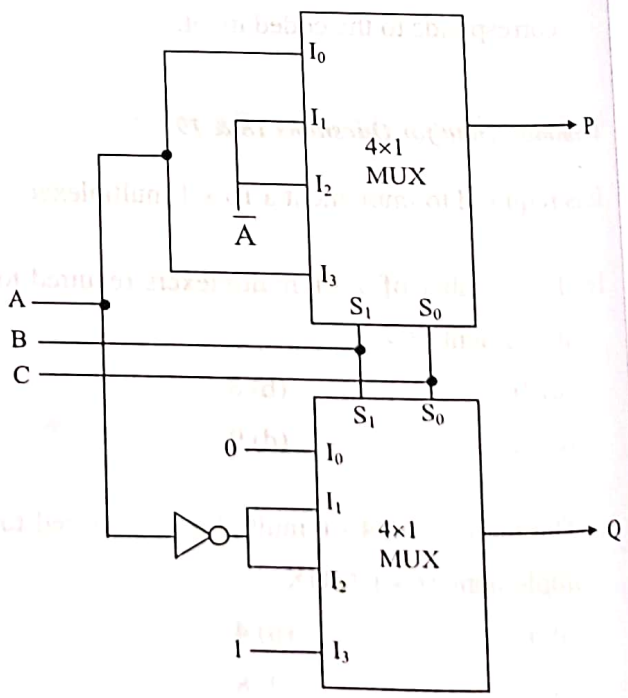

Scanned with CamScanner

(a) $P(A,B,C) = \Sigma m(1, 2, 4, 7)$
$Q(A,B,C) = \Sigma m(2, 3, 4, 7)$

(b) $P(A,B,C) = \Sigma m(1, 2, 4, 7)$
$Q(A,B,C) = \Sigma m(1, 2, 3, 7)$

(c) $P(A,B,C) = \Sigma m(1, 2, 4, 7)$
$Q(A,B,C) = \Sigma m(3, 5, 6, 7)$

(d) $P(A,B,C) = \Sigma m(3, 5, 6, 7)$
$Q(A,B,C) = \Sigma m(1, 2, 4, 7)$

27. The Boolean equation representing the following circuit is

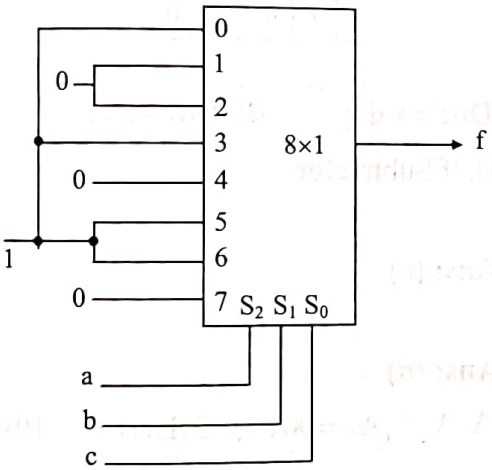

(a) $f(a, b, c) = \Sigma m(1, 2, 4, 7)$
(b) $f(a, b, c) = \Sigma m(3, 5, 6, 7)$
(c) $f(a, b, c) = \Sigma m(0, 3, 5, 6)$
(d) $f(a, b, c) = \Sigma m(1, 2, 5, 7)$

28. To design a 2-bit comparator the following are needed
(a) Two 1-bit comparators, 2 AND gates, 1 OR gate
(b) Two 1-bit comparators, 3 AND gates, 2 OR gates
(c) Three 1 bit comparators, 2 AND gates, 1 OR gate
(d) Three 1-bit comparators, 3 AND gates, 2 OR gates

29. What are basic gates required to implement a full adder?
(a) 1–EX–OR gate, 1 AND gate
(b) 2–EX–OR gates, 1 OR gate
(c) 2EX–OR gates, 2 AND gates, 1 OR gate
(d) 1EX–OR gates, 2 AND gates, 2 OR gates

30. How many half adders are required to implement the following expressions.
$D = \overline{A}BC + A\overline{B}C, E = A \oplus B \oplus C$
$F = \overline{A}C + AB\overline{C} + \overline{B}C$
(a) 2 (b) 3
(c) 4 (d) 1

31. While designing BCD(ABCD) to 9's complement BCD(PQRS), what is the expression for 'Q'?
(a) $B \oplus \overline{C}$ (b) BC
(c) $B \oplus C$ (d) $\overline{B} \oplus C$

32. What are the components required to realize $10 \times 1k$ decoder?
(a) '4' 8×256 decoders & '1' 2×4 decoder
(b) '8' 8×256 decoders & '2' 2×4 decoders
(c) '4' 8×256 decoders & '2' 2×4 decoders
(d) '8' 8×256 decoders & '1' 2×4 decoder.

33.

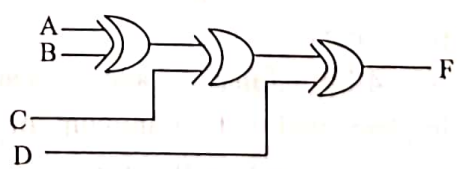

The above circuit is a
(a) Even parity generator
(b) Odd parity generator
(c) Even parity checker
(d) Odd parity checker

Scanned with CamScanner

Solutions

01. Ans: (b)

Sol:

A	B	C	Diff	Borrow
0	0	0	0	0
0	0	1	1	1
0	1	0	1	1
0	1	1	0	1
1	0	0	1	0
1	0	1	0	0
1	1	0	0	0
1	1	1	1	1

$\text{Diff} = \Sigma m\,(1, 2, 4, 7) \quad = A \oplus B \oplus C$

$\text{Borrow} = \Sigma m\,(1, 2, 3, 7) = \overline{A}B + \overline{(A \oplus B)} \cdot C$

02. Ans: (d)

Sol: $W = A,\ X = A \oplus B,\ Y = B \oplus C,\ Z = C \oplus D$

$$\begin{array}{ccccccc} A & \xrightarrow{\oplus} & B & \xrightarrow{\oplus} & C & \xrightarrow{\oplus} & D \\ \downarrow & & \downarrow & & \downarrow & & \downarrow \\ W & & X & & Y & & Z \end{array}$$

It is equivalent to Gray code

03. Ans: (a)

Sol: P. minimum number of NAND gates required to implement a X-NOR function is '5'. → (2)

Q. A 4-bit binary adder can be implemented with minimum of seven half adders and 3 OR gates. → (1)

R. Combinational digital circuit is EEPROM. → (6)

S. Sequential digital circuit – serial adder. → (5)

04. Ans: (d)

Sol: $F_1 = I_0\overline{S} + I_1 S \qquad F_2 = I_0\overline{S} + I_1 S$

For F_1, $I_0 = x,\ I_1 = \overline{x},\ S = y$

For F_2, $I_0 = 0,\ I_1 = \overline{x},\ S = y$

$F_1 = x\overline{y} + \overline{x}y, \quad F_2 = 0\overline{y} + \overline{x}y$

$F_1 = x \oplus y \qquad F_2 = \overline{x}y$

x	y	Diff	Borrow
0	0	0	0
0	1	1	1
1	0	1	0
1	1	0	0

$\text{Diff} = x \oplus y, \qquad \text{Borrow} = \overline{x}y,$

Half Subtractor

05. Ans: (a)

06. Ans: (d)

Sol: $A_3A_2A_1A_0 = 0010,\ B_3B_2B_1B_0 = 1011$

Then $A_0 \oplus B_0 = 0 \oplus 1 = 1 \quad A_1 \oplus B_1 = 1 \oplus 1 = 0$

$A_2 \oplus B_2 = 0 \oplus 0 = 0$

$A_3 \oplus B_3 = 0 \oplus 1 = 1$

The output $Y = \overline{(1+0+0+1)} = \overline{1} = 0$

07. Ans: (d)

Sol: Excess–3 code is self complementing code because 1's complement of given BCD number Excess–3 code is 9's complement of given BCD number in Excess code form.

08. Ans: (d)

Sol: $F = \overline{(\overline{x+\overline{y}})+\overline{x}} = \overline{\overline{x}}.\left(\overline{\overline{x+\overline{y}}}\right) = x.(x+\overline{y})$

Scanned with CamScanner

$= x + x\bar{y} = x(1+\bar{y}) = x$

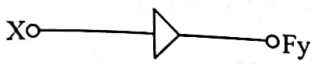

09. Ans: (d)

Sol: Let us take input = 0001 and 1– input carry

```
        1
  0 0 0 1
  1 0 0 1
  -------
  1 0 1 1
```

10. Ans: (b)

Sol: Let us take 0 ← input carry

```
                0
Input = 0 0 0 1
Add     1 0 1 0
        -------
        1 0 1 1
```

11. Ans: (c)

Sol:

A	B	C	D	F
0	0	0	0	0
0	0	0	1	0
0	0	1	0	0
0	0	1	1	1
0	1	0	0	0
0	1	0	1	0
0	1	1	0	1
0	1	1	1	1
1	0	0	0	0
1	0	0	1	1
1	0	1	0	0
1	0	1	1	1
1	1	0	0	1
1	1	0	1	1
1	1	1	0	1
1	1	1	1	1

AB \ CD	00	01	11	10
00			1	
01			1	1
11	1	1	1	1
10		1	1	

$F = AB + AD + BC + CD$

12. Ans: (b)

Sol: $p = \sum m(1, 2, 4, 7) = A$

x \ yz	00	01	11	10
0		1		1
1	1		1	

$p = x \oplus y \oplus z$ 3i/p Ex - OR gate

13. Ans: (b)

Sol: $f = \overline{(\overline{\overline{A}\,\overline{B}\,\overline{C}}.\overline{A\,\overline{B}C}.\overline{A\overline{B}C}.\overline{A\overline{B}\,\overline{C}}.\overline{ABC})}$

$f = \overline{A}\,\overline{B}\,\overline{C} + \overline{A}\,\overline{B}C + \overline{A}BC + A\overline{B}\,\overline{C} + ABC$

$f = \sum(0, 1, 3, 4, 7)$

A \ BC	00	01	11	10
0	1	1	1	
1	1		1	

$f = (\overline{B}\,\overline{C} + BC + \overline{A}\,\overline{B})D$

$f = ((B \odot C) + \overline{A}\,\overline{B})D$

14. Ans: (a)

Sol: The multiplexer output

$I_0 = a, I_1 = \bar{a}, I_2 = \bar{a}, I_3 = a, S_1 = b, S_0 = c$

$F = I_0\bar{S}_0\bar{S}_1 + I_1\bar{S}_1S_0 + I_2S_1\bar{S}_0 + I_3S_1S_0$

$F = a\bar{c}\,\bar{b} + \bar{a}\,\bar{b}c + \bar{a}b\bar{c} + abc$

Scanned with CamScanner

$F = \sum m(1, 2, 4, 7)$

a	b	c	sum	carry
0	0	0	0	0
0	0	1	1	0
0	1	0	1	0
0	1	1	0	1
1	0	0	1	0
1	0	1	0	1
1	1	0	0	1
1	1	1	1	1

$Sum = \sum m(1, 2, 4, 7)$

The multiplexer circuit equivalent to sum equation of full adder.

15. Ans: (d)

Sol: The 2×1 MUX expression $F = I_0\overline{S} + I_1S$

For First MUX $S = A,\ I_0 = 0,\ I_1 = 0$

For Second MUX $S = B,\ I_0 = F_1,\ I_1 = A$

$F_1 = 0.\overline{A} + 0.A = 0$

$F_2 = 0.\overline{B} + AB = AB$

16. Ans: (c)

Sol: $F_1 = 0.\overline{x} + 1.x = x$

$F_2 = F_1.y + x.\overline{y} = xy + x\overline{y} = x$

$F_3 = F_2.z + y\overline{z} = (xy + x\overline{y})z + y\overline{z}$

$F = xyz + x\overline{y}z + xy\overline{z} + \overline{x}y\overline{z}$

$F = \sum m(2, 5, 6, 7)$

17. Ans: (a)

Sol: A demux can be used as a decoder and demux selects one of many outputs where as decoder selects an o/p corresponding to the coded input.

18. Ans: (c)

Sol:

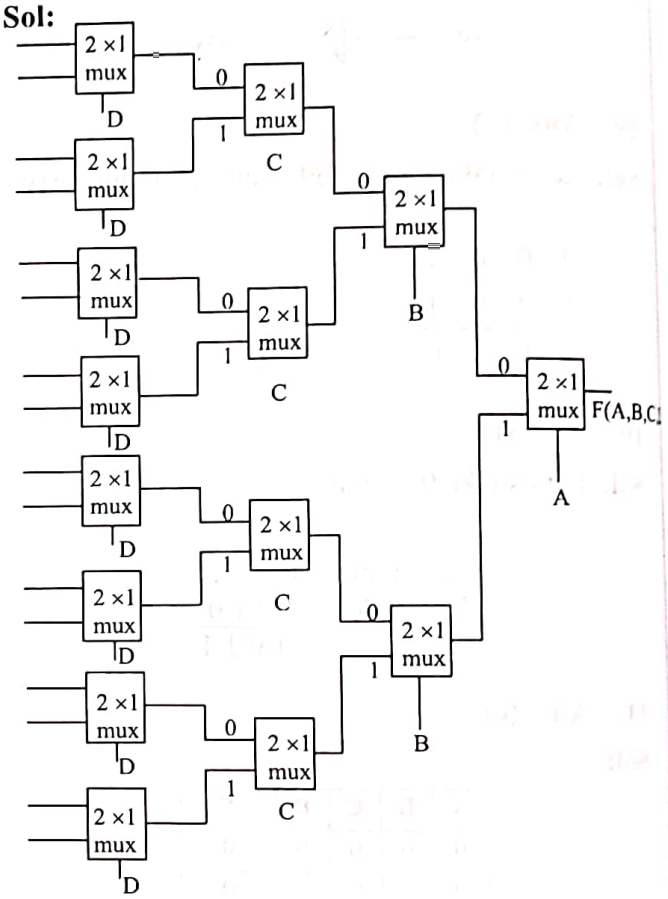

19. Ans: (a)

Sol:

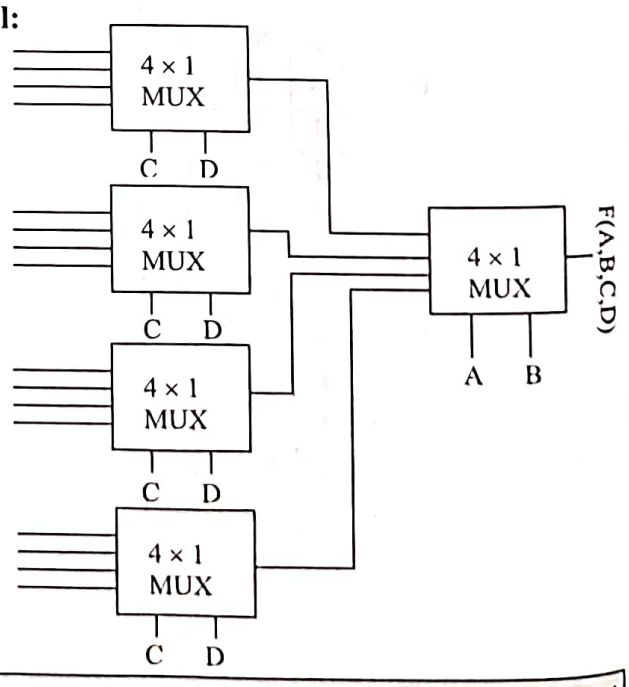

Scanned with CamScanner

20. Ans: (a)

Sol: $F_1 = P = I_0\overline{S_1}\,\overline{S_0} + I_1\overline{S_1}S_0 + I_2S_1\overline{S_0} + I_3S_1S_0$

Given $I_0 = A, I_1 = \overline{A}, I_2 = \overline{A}, I_3 = A$

$S_1 = B,\ S_0 = C$

$P = A\overline{B}\,\overline{C} + \overline{A}\,\overline{B}C + \overline{A}B\overline{C} + ABC$

$= A \oplus B \oplus C$

For

Q, $I_0 = 0,\ I_1 = A,\ I_2 = A,\ I_3 = 1$

$S_1 = B,\ S_0 = C$

$Q = 0 + A\overline{B}C + AB\overline{C} + 1.BC$

$Q = A(B \oplus C) + BC$

P – Full adder sum

Q – Full adder carry

21. Ans: (b)

Sol: To implement Full adder we require minimum 9 NAND gates.

22. Ans: (a)

Sol: $F = \pi M(2,4,7)$

X Y Z	o/p	X Y Z	o/p	
0 0 0	1	0 0 0	1	$\overline{X}$
0 0 1	1	1 0 0	0	
0 1 0	0	0 0 1	1	1
0 1 1	1	1 0 1	1	
1 0 0	0	0 1 0	0	X
1 0 1	1	1 1 0	1	
1 1 0	1	0 1 1	1	$\overline{X}$
1 1 1	0	1 1 1	0	

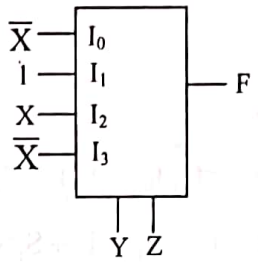

23. Ans: (a)

Sol: $F = I_0\overline{S_1}\,\overline{S_0} + I_1\overline{S_1}S_0 + I_2S_1\overline{S_0} + I_3S_1S_0$

$S_1 = B, S_0 = C, I_0 = A, I_1 = \overline{A}, I_2 = 1, I_3 = 0$

$F = A\overline{B}\,\overline{C} + \overline{A}\,\overline{B}C + B\overline{C} + 0$

$= A\overline{B}\,\overline{C} + \overline{A}\,\overline{B}C + B\overline{C}(A + \overline{A})$

$F = A\overline{B}\,\overline{C} + \overline{A}\,\overline{B}C + AB\overline{C} + \overline{A}B\overline{C} = \Sigma m(1,2,4,6)$

24. Ans: (b)

Sol:

	w	x	y	z	f
0	0	0	0	0	0
1	0	0	0	1	0
2	0	0	1	0	1
3	0	0	1	1	1
4	0	1	0	0	1
5	0	1	0	1	0
6	0	1	1	0	0
7	0	1	1	1	1
8	1	0	0	0	1
9	1	0	0	1	0
10	1	0	1	0	0
11	1	0	1	1	1
12	1	1	0	0	0
13	1	1	0	1	0
14	1	1	1	0	1
15	1	1	1	1	1

$F(w,x,y,z) = \Sigma m(2,3,4,7,8,11,14,15)$

Scanned with CamScanner

25. Ans: (b)

26. Ans: (b)

Sol: $S_1 = B, S_0 = C, I_0 = A, I_1 = I_2 = \overline{A}, I_3 = A$

$$P = \overline{S_1}\,\overline{S_0}\, I_0 + \overline{S_1} S_0 I_1 + S_1 \overline{S_0}\, I_2 + S_1 S_0 I_3$$

$$= \overline{B}\,\overline{C}\, A + \overline{B} C \overline{A} + B \overline{C}\, \overline{A} + BCA$$

$$= \sum m(1,2,4,7).$$

$S_1 = B, S_0 = C, I_0 = 0, I_1 = I_2 = \overline{A}, I_3 = 1$

$$Q = \overline{S_1}\,\overline{S_0}\, I_0 + \overline{S_1} S_0 I_1 + S_1 \overline{S_0}\, I_2 + S_1 S_0 I_3$$

$$= \overline{B}\,\overline{C}\, 0 + \overline{B} C \overline{A} + B \overline{C}\, \overline{A} + BC1$$

$$= 0 + \overline{A}\,\overline{B} C + \overline{A} B \overline{C} + BC(A + \overline{A})$$

$$= \overline{A}\,\overline{B} C + \overline{A} B \overline{C} + \overline{A} BC + ABC$$

$$= \sum m(1,2,3,7).$$

27. Ans: (c)

Sol: $S_2 = a, S_1 = b, S_0 = c, I_0 = 1, I_1 = 0\ I_2 = 0,$

$I_3 = 1, I_4 = 0, I_5 = I_6 = 1, I_7 = 0$

$$f = \overline{S_2}\,\overline{S_1}\,\overline{S_0}\, I_0 + \overline{S_2}\,\overline{S_1} S_0 I_1 + \overline{S_2} S_1 \overline{S_0} I_2 + \overline{S_2} S_1 S_0 I_3$$

$$+ S_2 \overline{S_1}\,\overline{S_0}\, I_4 + S_2 \overline{S_1} S_0 I_5 + S_2 S_1 \overline{S_0} I_6 + S_2 S_1 S_0 I_7$$

$$f = \overline{a}\,\overline{b}\,\overline{c}(1) + \overline{a}\,\overline{b} c(0) + \overline{a} b \overline{c}(0) + \overline{a} bc(1) + a \overline{b}\,\overline{c}(0)$$

$$+ a \overline{b} c(1) + ab \overline{c}(1) + abc(0)$$

$$f = \overline{a}\,\overline{b}\,\overline{c} + \overline{a} bc + a \overline{b} c + a b \overline{c}$$

$$= \sum m(0,3,5,6)$$

28. Ans: (b)

Sol: Let $A = A_1A_0, B = B_1B_0$

$A > B$, if $A_1 > B_1$ (or)

$A_1 = B_1$ and $A_0 > B_0$

$G = G_1 + E_1 \cdot G_0$

$A = B$, if $A_1 = B_1$ and $A_0 = B_0$

$E = E_1 \cdot E_0$

$A < B$, if $A_1 < B_1$ (or) $A_1 = B_1$ and $A_0 < B_0$

$L = L_1 + E_1 L_0$

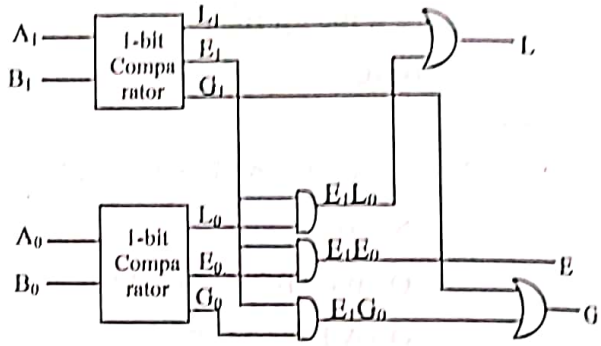

29. Ans: (c)

Sol:

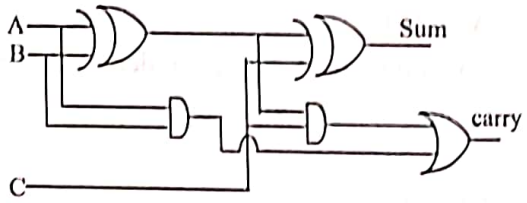

2 EX-OR gates, 2 AND gates, 1 OR gate

30. Ans: (b)

Sol: $D = \overline{A}BC + A\overline{B}C = C(A \oplus B)$, $F = (\overline{A} + \overline{B})C + AB\overline{C}$

$$F = \overline{AB}C + AB\overline{C} = AB \oplus C$$

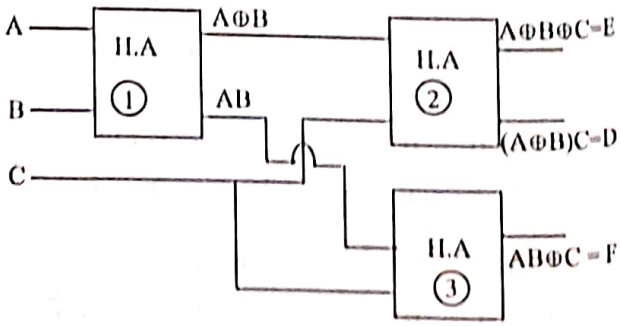

Scanned with CamScanner

31. Ans: (c)

Sol:

(BCD)				(9's complement BCD)			
A	B	C	D	P	Q	R	S
0	0	0	0	1	0	0	1
0	0	0	1	1	0	0	0
0	0	1	0	0	1	1	1
0	0	1	1	0	1	1	0
0	1	0	0	0	1	0	1
0	1	0	1	0	1	0	0
0	1	1	0	0	0	1	1
0	1	1	1	0	0	1	0
1	0	0	0	0	0	0	1
1	0	0	1	0	0	0	0

$$Q = \sum m(2,3,4,5) + \sum d(10,11,12,13,14,15)$$

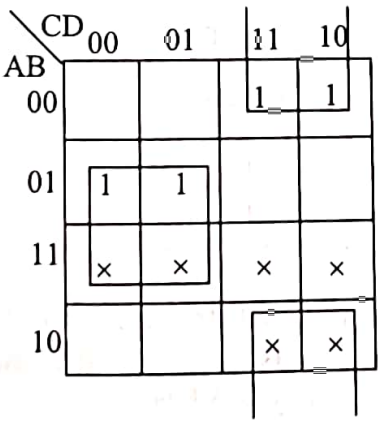

$$Q = B\overline{C} + \overline{B}C = B \oplus C$$

32. Ans: (a)

Sol:

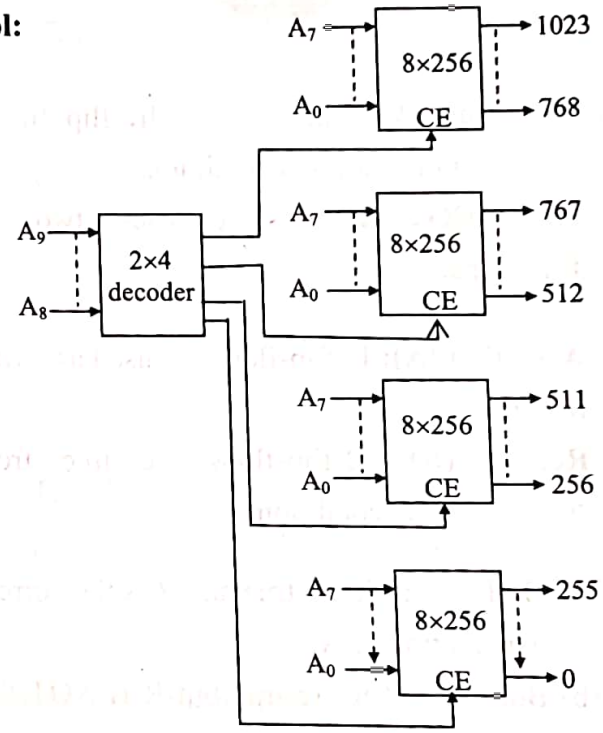

33. Ans: (a)

Sol:

A	B	C	D	Output Parity bit (f)
0	0	0	0	0
0	0	0	1	1
0	0	1	0	1
0	0	1	1	0
0	1	0	0	1
0	1	0	1	0
0	1	1	0	0
0	1	1	1	1
1	0	0	0	1
1	0	0	1	0
1	0	1	0	0
1	0	1	1	1
1	1	0	0	0
1	1	0	1	1
1	1	1	0	1
1	1	1	1	0

$$f = A \oplus B \oplus C \oplus D$$

Scanned with CamScanner

Chapter 4 Sequential Circuits

01. **Assertion (A) :** Master–slave JK flip–flop is free from race–around condition.

Reason(R) : Master–slave uses two JK flip–flops.

02. **Assertion (A):** D-flip-flops are used as buffer register.

Reason (R): D-flip-flops are free from "race- around" condition.

(a) Both A and R are true and R is the correct explanation of A.
(b) Both A and R are true but R is NOT the correct explanation of A.
(c) A is true but R is false.
(d) A is false but R is true

03. Which one of the following circuits converts an SR flip- flop to T flip flop ?

(a)

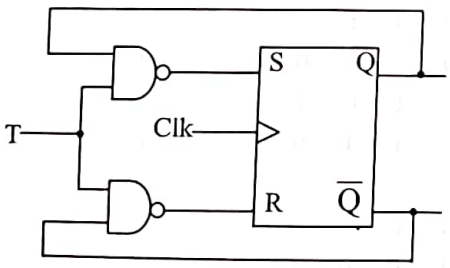

(b)

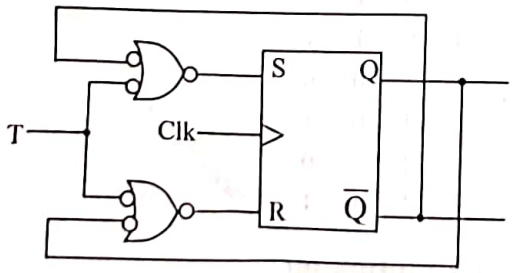

(c)

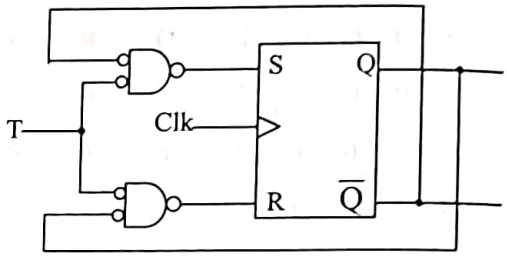

(d)

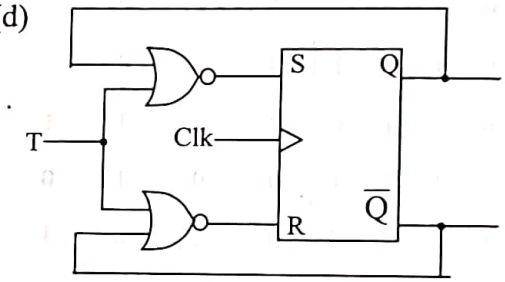

04. What are the contents of Q_1 & Q_0 after 78th clock pulse. Initially the contents are $Q_1 = 0$, $Q_0 = 0$

(a) 00
(b) 01
(c) 10
(d) 11

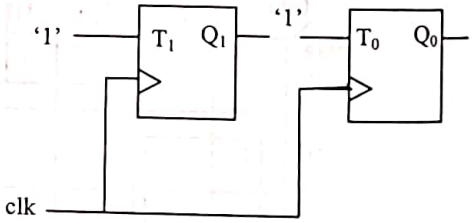

05. The output signal frequency of the circuit shown below is_____if the input clock signal frequency is 5 KHz.

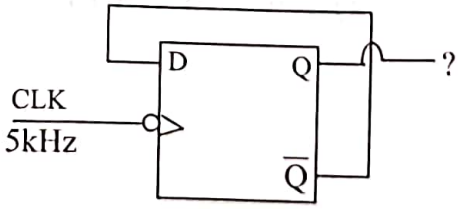

(a) 1 KHz
(b) 2 KHz
(c) 2.5 KHz
(d) 5 KHz

Scanned with CamScanner

06. What is the output of the flip – flop shown in the fig., if the clock frequency is 4 KHz

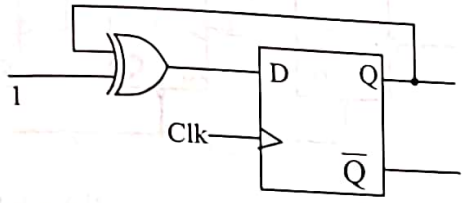

(a) output is always at 0
(b) output is always at 1
(c) output is always a signal with 2 KHz frequency
(d) output is same as clock signal with 4 KHz frequency

07. The input clock signal frequency is 2 kHz. Then the output signal frequency of the Circuit is ?

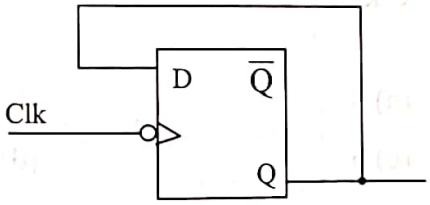

(a) 1 KHz (b) 2 KHz
(c) 0 KHz (d) Can not be determined

08. An A–B flip–flop whose characteristic table is given below is to be implemented using J-K flip–flop this can be done by making

A	B	Q_{n+1}
0	0	1
0	1	Q_n
1	0	$\overline{Q_n}$
1	1	0

(a) $J = \overline{B}$, $K = A$ (b) $J = A$, $K = B$
(c) $J = A$, $K = \overline{B}$ (d) $J = B$, $K = \overline{A}$

09. A S–R Flip–Flop is converted into X-Flip-Flop as shown below.

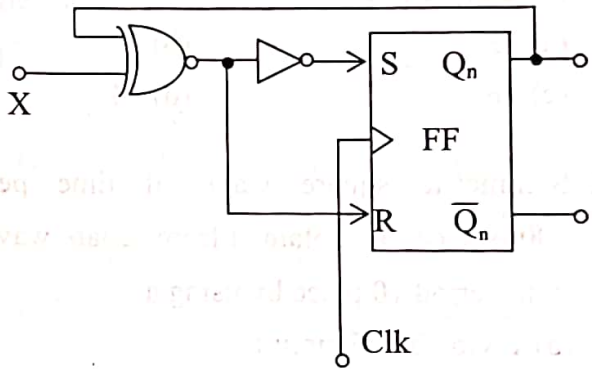

The characteristic equation is

(a) $\overline{X \oplus Q_n}$ (b) $X+Q_n$
(c) $X \oplus Q_n$ (d) $X\,Q_n$

Linked Answer Questions 10 & 11

The 8-bit left shift register and D flip-flop shown in the figure is synchronized with same clock. The D flip-flop initially cleared.

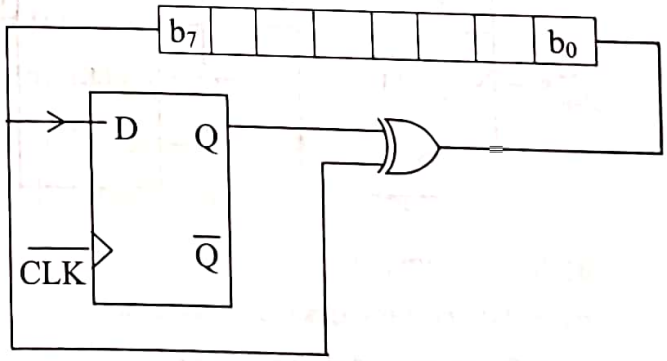

10. The circuit act as
(a) Binary to 2's complement converter
(b) Binary to gray code converter
(c) Binary to 1's complement converter
(d) Binary to Excess-3 code converter

Scanned with CamScanner

11. If the initial content of register is 10110111 then after 4 clock pulses, the content of register will be_____.

(a) 73 (b) 72

(c) 7E (d) 74

12. Symmetric square wave of time period 100μsec can be obtained from square wave of time period 10 μ sec by using a

(a) divide by –5 circuit

(b) divide by –2 circuit

(c) divide by –5 followed by a divide by –2 circuit

(d) None of these

13. The circuit shown below illustrates a typical application of the J-K flip-flops. What does this represent?

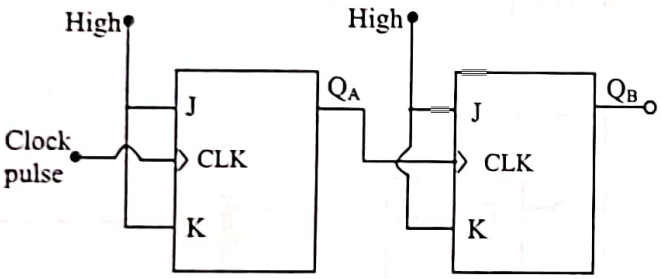

(a) A shift register

(b) A data storage device

(c) A frequency divider circuit

(d) A decoder circuit

14. What is the output signal frequency of the following counter if the clock signal frequency is 16 KHz? All 'J' and 'K' inputs are connected to1.

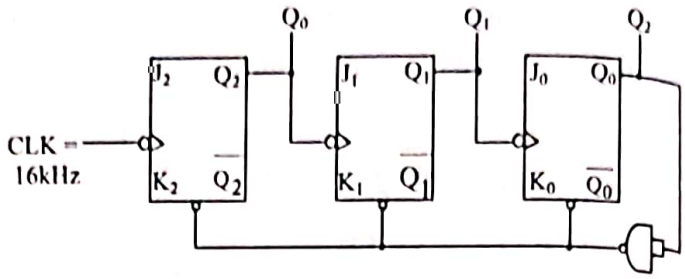

(a) 4 KHz (b) 8 KHz

(c) 10 KHz (d) 16 KHz

15. How many different output states the following circuit is having?

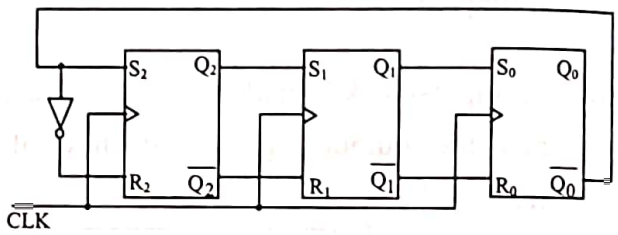

(a) 3 (b) 4

(c) 5 (d) 6

16. The number of unused states in a 4-bit Johnson counter is

(a) 2 (b) 4

(c) 8 (d) 12

17. The switching sequence is

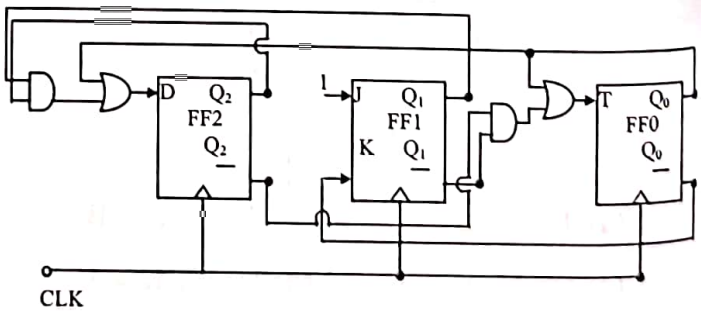

Scanned with CamScanner

(a) $0 \rightarrow 6 \rightarrow 3 \rightarrow 4 \rightarrow 2$

(b) $0 \rightarrow 3 \rightarrow 6 \rightarrow 4 \rightarrow 2$

(c) $0 \rightarrow 6 \rightarrow 3 \rightarrow 2 \rightarrow 4$

(d) $0 \rightarrow 3 \rightarrow 6 \rightarrow 2 \rightarrow 4$

18. How many flip–flops are required to construct Mod–31 counter?

(a) 4 (b) 3

(c) 2 (d) 5

19. In which of the following counters lock out problem ***not*** present ?

(a) Mod – 3 (b) Mod – 7

(c) Mod – 1 (d) Mod – 16

20. Match List–I (Digital Circuits) with List–II (Circuit type) and select the ***correct*** answer using the codes given below

List – I	List – II
P) ROM	1) Sequential Circuit
Q) Serial adder	2) Combinational
R) Code Converter	3) Neither Combinational nor sequential
S) Sequence detector	

Codes:

	P	Q	R	S
(a)	2	1	2	2
(b)	2	1	2	3
(c)	2	1	2	1
(d)	1	1	2	2

21. Match List – I with List – II and select the correct answer by using the code given below the lists :

List – I	List – II
P) Multiplexer	1) Sequential Memory
Q) De - Multiplexer	2) Converts decimal number to binary
R) Shift - register	3) Data selector
S) Encoder	4) Routes out many data output with signal input

	P	Q	R	S
(a)	3	4	1	2
(b)	3	4	2	1
(c)	4	3	1	2
(d)	1	2	3	4

22. Which one of the following Shift register operation can be used as digital delay line ?

(a) Parallel input – Serial output

(b) Serial input – Parallel output

(c) Parallel input – Parallel output

(d) Serial input – Serial output

23. A 3 bit modulo-8 ripple counter uses JK flip-flops. If the propagation delay of each FF is 40 ns, the maximum clock frequency that can be used is equal to:

(a) 20 MHz (b) 10 MHz

(c) 8.33 MHz (d) 4 MHz

Scanned with CamScanner

24. Determine the characteristic equation of XY flip flop, whose truth table is as shown below.

X	Y	Q_{n+1}
0	0	1
0	1	Q_n
1	0	$\overline{Q}_n$
1	1	0

(a) $Q_{n+1} = \overline{Y}\,\overline{Q}_n + \overline{X}Q_n$

(b) $Q_{n+1} = YQ_n + XQ_n$

(c) $Q_{n+1} = Y \oplus Q_n$

(d) $Q_{n+1} = Y \odot Q_n$

25. The number of states in a 5 bit Ring, 5 bit Johnson counter and the number of unused states in a 5 bit Ring, Johnson counter

(a) 10, 5, 27, 22 (b) 5, 10, 27, 22

(c) 10, 5, 22, 27 (d) 5, 10, 22, 27

26. Match List-I (circuit) with List-II (application) and select the correct answer using the Code given below lists :

List-I	List-II
1) Division	P. Ripple up counter
2) Multiplication	Q. Shift Left Register
3) Transient states	R. Shift Right Register

	P	Q	R
(a)	2	3	1
(b)	3	1	2
(c)	2	1	3
(d)	3	2	1

27. Match List – I (Logic function circuit) with List – II (Circuit realization) and select the correct answer using code given below list.

List – I

(A) D-flip flop

(B) T-flip flop

(C) half subtractor borrow

(D) half adder carry

List – II

1.

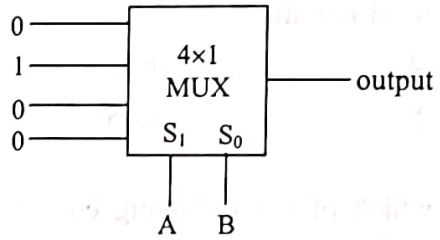

2.

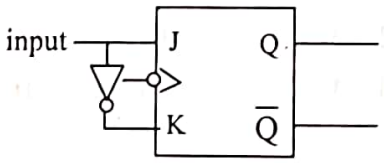

3.

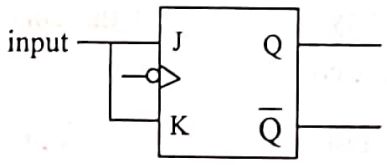

4.

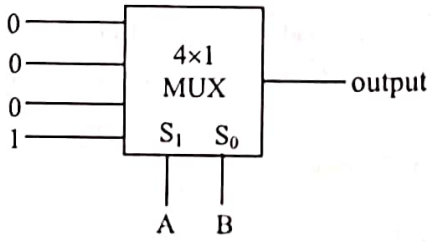

Codes:

	A	B	C	D
(a)	2	3	1	4
(b)	2	3	4	1
(c)	3	2	4	1
(d)	3	2	1	4

Scanned with CamScanner

Solutions

01. Ans: (b)

Sol: (a) Master – slave JK flip flop is free from race – around condition. (True)

(b) Master – slave uses two J K Flip – Flops – (True)

02. Ans: (b)

Sol: Race around condition will not occur in DFF

03. Ans: (b)

Sol: 'SR' flip flop to 'T' flip flop

T	Q_n	Q_{n+1}	S	R
0	0	0	0	X
0	1	1	X	0
1	0	1	1	0
1	1	0	0	1

$S = T\overline{Q_n}$,

$R = TQ_n$

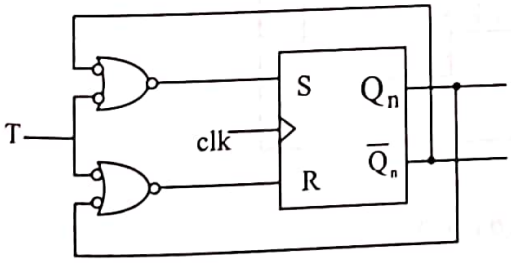

04. Ans: (a)

Sol: For Odd clock pulse, the contents are $Q_1Q_0 = 11$

For even clock pulse, the contents are $Q_1Q_0 = 00$

05. Ans: (c)

Sol: The flip-flop is a negative edge triggered flip-flop and the excitation expression for D-flip-flop is $Q_{n+1}=D$.

The given clock frequency f=5KHZ, T=1/f=0.2msec.

Initially assume Q=0, $\overline{Q}$ =1, D=1

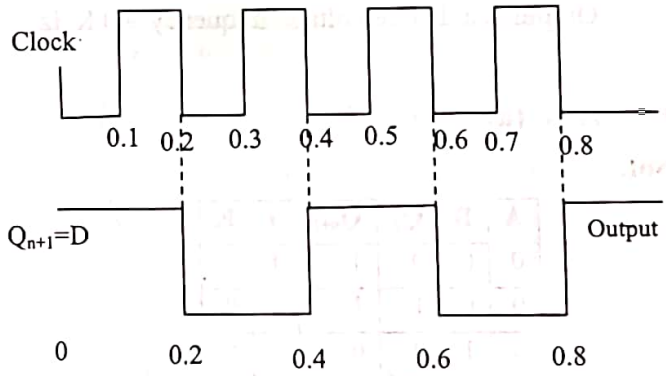

The output wave time period is T = 0.4msec.

so, $f = \frac{1}{T} = \frac{1}{0.4\text{m sec}} = \frac{10000}{4} = 2.5$ kHz

06. Ans: (c)

Sol: The clock frequency f = 4 KHz

$T = \frac{1}{f} = \frac{1}{4k} = 0.25$ m sec

$0 \oplus 1 = 1$

$1 \oplus 1 = 0$

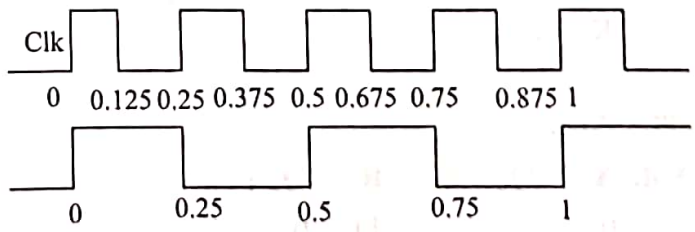

Output time period T = 0.5m sec

$f = \frac{1}{T} = \frac{1}{0.5\text{m sec}} = 2$ KHz

Output is always a signal with 2KHz frequency

Scanned with CamScanner

07. Ans: (c)

Sol: Clk f = 2 kHz, $T = \frac{1}{f} = \frac{1}{2k} = 0.5\,\text{msec}$

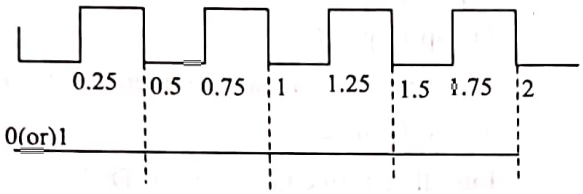

Output is a dc line voltage frequency = 0 KHz.

08. Ans: (a)

Sol:

A	B	Q_n	Q_{n+1}	J	K
0	0	0	1	1	×
0	0	1	1	×	0
0	1	0	0	0	×
0	1	1	1	×	0
1	0	0	1	1	×
1	0	1	0	×	1
1	1	0	0	0	×
1	1	1	0	×	1

$J = \overline{A}\,\overline{B}\,\overline{Q}_n + A\overline{B}\,\overline{Q}_n$

$J = \overline{B}\,\overline{Q}_n$

$K = A\overline{B}Q_n + ABQ_n$

$K = AQ_n$

$J = \overline{B}$

$K = A$

09. Ans: (c)

Sol:

X	Q_n	S	R	Q_{n+1}
0	0	0	1	0
0	1	1	0	1
1	0	1	0	1
1	1	0	1	0

$Q_{n+1} = \overline{X}Q_n + X\overline{Q}_n$

$= X \oplus Q_n.$

10. Ans: (b)

Sol: $b_7\ b_6\ b_5\ b_4\ b_3\ b_2\ b_1\ b_0$

$\downarrow$

$b_7\ \ b_7 \oplus b_6\ \ b_6 \oplus b_5\ \ b_5 \oplus b_4\ \ b_4 \oplus b_3\ \ b_3 \oplus b_2\ \ b_2 \oplus b_1\ \ b_1 \oplus b_0$

Binary to Gray code

11. Ans: (c)

Sol:

Clk								
1	0	1	1	0	1	1	1	1
2	1	1	0	1	1	1	1	1
3	1	0	1	1	1	1	1	1
4	0	1	1	1	1	1	1	0

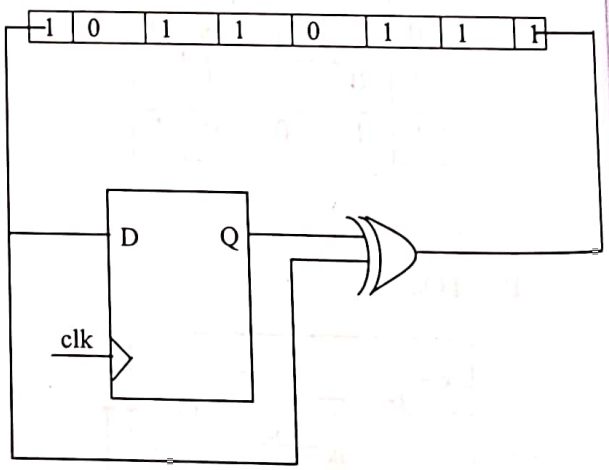

12. Ans: (c)

Sol: $f_{out} = \frac{f_{in}}{\text{MOD.NO.}}$

$\frac{1}{T_{out}} = \frac{1}{T_{in}.\text{MOD.NO}} \Rightarrow \text{MOD.NO.} = \frac{T_{out}}{T_{in}}$

$= \frac{100\mu}{10\mu} = 10$

Option 'C', satisfied the MOD. NO.10

Scanned with CamScanner

13. Ans: (c)

Sol: It is a MOD–4 counter. Also called frequency divider circuit

CLK	Q_A	Q_B
0	0	0
1	1	1
2	0	1
3	1	0
4	0	0

4 states

14. Ans: (a)

Sol: It is a down counter the counting sequence is

CLK	Q_2	Q_1	Q_0
0	0	0	0
1	0	0	1
2	0	1	0
3	0	1	1
4	0	0	0

∴ It has only 4 states

$$f_{out} = \frac{f_{in}}{MOD.NO}$$

$$= \frac{16k}{4} = 4KHz.$$

15. Ans: (d)

Sol:

				$\overline{Q_0}$	(Q_0)	(Q_2)	$\overline{Q_2}$	(Q_1)	$\overline{Q_1}$
Clk	Q_2	Q_1	Q_0	S_2	R_2	S_1	R_1	S_0	R_0
0	0	0	0	1	0	0	1	0	1
1	1	0	0	1	0	1	0	0	1
2	1	1	0	1	0	1	0	1	0
3	1	1	1	0	1	1	0	1	0
4	0	1	1	0	1	0	1	1	0
5	0	0	1	0	1	0	1	0	1
6	0	0	0						

Total = 6 states

16. Ans: (c)

Sol: No. of unused states in a 4–bit Johnson counter = Total no. of states – no. of used states = $2^4 - 2\times 4 = 16 - 8 = 8$

17. Ans: (b)

Sol:

Q_2	Q_1	Q_0	D $(Q_0+Q_1Q_2)$	J 1	K $\overline{Q_0}$	T $(Q_0+\overline{Q_1}\overline{Q_2})$
0	0	0	0	1	1	1
0	1	1	1	1	0	1
1	1	0	1	1	1	0
1	0	0	0	1	1	0
0	1	0	0	1	1	0

The switching sequence is

$$0 \rightarrow 3 \rightarrow 6 \rightarrow 4 \rightarrow 2$$

18. Ans: (d)

Sol: To construct a mod-N, counter the number of flip-flop required is $N \le 2^n$,

Where n = number of flip-flops.

Given $N = 31$, $31 \le 2^n$, n=5

19. Ans: (d)

Sol: The lock out problem is not present in mod–k counter, if 'k' is powers of '2'. In the given options Mod – 16.

20. Ans: (c)

Sol: ROM–combinational (no feed back from output to input) → 2

Serial adder–sequential circuit (it uses flip flops) → 1

Scanned with CamScanner

Code converter–combinational (no feed back from output to input) → 2

Sequence detector–sequential circuit (it uses flip flop) → 1

21. Ans: (a)

Sol: P. Multiplexer is a data selector → (3)

Q. De–multiplexer–routes out many data lines output with single o/p → (4)

R. Shift register–sequential memory → (1)

S. Encoder–converts decimal to binary → (2)

22. Ans: (d)

Sol: Serial input, serial output shift register operation can be used as digital delay line.

23. Ans: (c)

Sol: Propagation delay T_d of each FF = 40ns.

3 bit modulo 8 ripple counter represents

$n = 3$

Maximum clock frequency

$$f = \frac{1}{T_d \times n} = \frac{1}{40 \times 3 \times 10^{-9}}$$

$$= 8.33 \text{ MHz}$$

24. Ans: (a)

Sol:

X	Y	Q_n	Q_{n+1}
0	0	0	1
0	0	1	1
0	1	0	0
0	1	1	1
1	0	0	1
1	0	1	0
1	1	0	0
1	1	1	0

X \ YQ_n	00	01	11	10
0	1	1	1	0
1	1	0	0	0

$$Q_{n+1} = \overline{Y}\,\overline{Q}_n + \overline{X}Q_n$$

25. Ans: (b)

Sol: The number of states in 5 bit ring counter = 5

The number of states in 5 bit Johnson counter = 10

The number of unused states in 5 bit ring counter = $2^5 - 5 = 27$

The number of unused states in 5 bit Johnson counter = $2^5 - 10$

$= 22$

26. Ans: (d)

Sol: P. Ripple up counter – produce transient states → 3

Q. Shift left register – multiplication → 2

R. Shift right register – division → 1

27. Ans: (a)

Sol:

1.

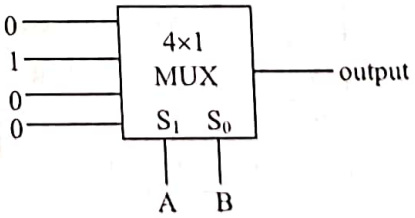

$$\text{Output} = \overline{A}B(1) = \overline{A}B$$

= Borrow of Half subtractor

Scanned with CamScanner

2.

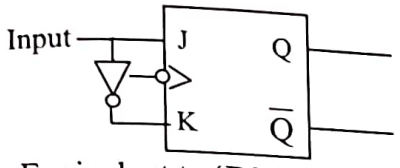

Equivalent to 'D' flip flop

3.

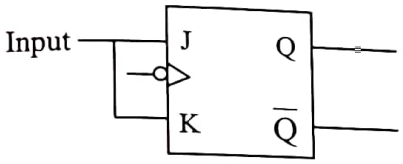

Equivalent to T-flip flop

4.

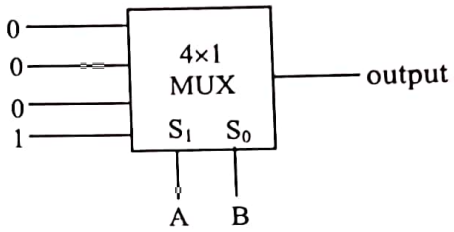

Output = AB(1) = AB
Equivalent to Carry of half adder

Scanned with CamScanner

Operating Systems

Scanned with CamScanner

Chapter 1 Process Management-I

01. _____ Scheduling is compromise between first-come first-served and shortest job first, discrimination of less against longer jobs.
(a) Round robin
(b) Shortest remaining time first
(c) Highest response ratio next
(d) Deadline scheduling

02. The state of the process during context-switching is:
(a) may be busy (b) may be idle
(c) always idle (d) always busy

03. The ability of an operating system to support multiple light weight processes within a single task or process is:
(a) On-line processing
(b) Multiprogramming
(c) Multiprocessing
(d) Multithreading

04. Which of the following is an advantage of interrupt-driven I/O over programmed I/O?
(a) Faster completion of I/O
(b) Higher bandwidth availability
(c) Better CPU utilization
(d) Smaller memory management

05. The threads may share all of the following except:
(a) Address space (b) Open files
(c) Signals (d) Program Counter

06. Which of the following is/are an *invalid* process state transaction?
(a) Timer start: ready → running
(b) Timer out: running → blocked
(c) I/O: running → ready
(d) Resume: suspend → running

07. The advantage of Round Robin CPU scheduling over shortest job first scheduling is:
(a) Better average turnaround time
(b) Better average response
(c) Both (a) and (b)
(d) Neither (a) nor (b)

08. If a process spends a fraction 'P' of its time waiting for I/O to complete with 'n' process in memory at once, the probability that all 'n' processes are waiting for I/O is _____and the CPU utilization is_____.
(a) p, n (b) $1 - p, p^n$
(c) $p^n, 1 - p^n$ (d) $p^n, 1/p^n$

09. Consider the following process scheduling data:

Process	Arrival Time	Processing Time
A	0.000	3
B	1.001	6
C	4.001	4
D	6.001	2

Scanned with CamScanner

(a) FCFS and SJF have same average through put but not SRTF

(b) SJF and SRTF have same average through put but not FCFS

(c) FCFS, SJF, SRTF and Round Robin with time quantum = 1 have the same average throughput.

(d) FCFS, SJF and SRTF have same average throughput but not Round Robin with time quantum = 2

10. On a system using round-robin scheduling, let *s* represents the time needed to perform a process switch, *q* represents the round-robin time quantum and *r* represents the average time a process runs before blocking an I/O. The CPU efficiency when s = q < r is:

(a) r/(r+s) (b) q/(q+s)

(c) ½ (d) zero

11. What are the reasons for process suspension?

I. Swapping

II. OS reason

III. Interactive user request

IV. Timing

V. Parent process request

(a) Only I

(b) Only I and

(c) Only I, III and V

(d) All

12. Match the following:

Scheduling Policies	Selection function
P. FCFS	1. max(w+s/s)
Q. SPN (Shortest Process Next)	2. min(s – e)
R. SRT (Shortest Remaining Time)	3. min(s)
S. HRRN	4. max(w)

Where,

w: time spent in system so far, waiting and executing

e: time spent in execution so far

s: total service time required by the process, including 'e'

Codes:

	P	Q	R	S
(a)	3	4	1	2
(b)	4	2	3	1
(c)	4	3	2	1
(d)	3	4	1	2

13. Once the operating system decides, for whatever reason, to create a new process, it proceeds the steps:

1. Initialize the process control block
2. Set the appropriate linkages
3. Create or expand other data structures
4. Allocate space for the process
5. Assign a unique process identifier to the new process

What is the order?

(a) 1→2→3→4→5 (b) 4→5→3→2→1

(c) 5→4→1→2→3 (d) 3→2→1→4→5

Scanned with CamScanner

14. Comparison of scheduling policies

Process	Arrival Time	Service Time (Ts)
A	0	3
B	2	6
C	4	4
D	6	5
E	8	2

The Avg (Tr/Ts) values of

(A) FCFS (B) RR(q = 1)

(C) HRRN (D) SRT

Tr = Turnaround time

Ts = Service time

Average (Turnaround time/ Service time)

(a) a > b > c > d (b) d > a > c > b

(c) b > c > a > d (d) b > a > c > d

15. Trap is used :

(a) For shifting from protected mode to Non-supervisory mode.

(b) For shifting from Non-privileged to privileged mode.

(c) Used for both (a) and (b)

(d) In Real Time operating system for indication of arrival of Response.

16. Consider the following:

Process	Arrival Time	Service Time (Ts)
A	0	3
B	2	6
C	4	4
D	6	5
E	8	2

From the above data, How much Average Turn around Time differed if we use Round Robin policy with Quantum (q = 4) Compared to HRRN.

(a) 2.00 less (b) 2.00 more

(c) 2.80 less (d) 2.80 more

17. Given a system with 'n' processes, how many possible ways can those processes be scheduled?

(a) n^2 (b) n

(c) 2n (d) n!

18. All of the following transitions are possible except?

(a) Ready → Run

(b) Ready → Swapped – blocked

(c) Blocked → Ready

(d) Running → Blocked

19. Which is the principal advantage of multiprogramming?

I. Increases CPU utilization.

II. Increases device utilization.

III. Controls thrashing

IV. Decreases response time.

(a) All are true

(b) Only I & II

(c) Only I & IV

(d) None of the above

Scanned with CamScanner

20. Consider the following statements.
   I. CPU bound jobs are favored by FCFS and SJF.
   II. Round Robin treats all processes the same.
   III. Multilevel feedback queues favors I/O bound jobs to a higher degree than CPU bound jobs.

   Which of the above statements are ***false***?
   (a) I (b) II
   (c) III (d) I & II

21. Given a system using the S.J.F. algorithm for short-term scheduling and exponential averaging with $\alpha = 0.5$, what would be next-expected burst-time for a process with burst-times of 5, 8, 3, 5 and an initial value of $T_1 = 10$?
   (a) 5.375 (b) 5.1875
   (c) 7.5 (d) 7.75

22. Consider the following program that runs on UNIX:

```
main( )
{
        int n = 2;
        int i;
        for (i=0; i<n; i++)
        if (fork ( ) = = 0) printf ("Hello");
}
```

   How many times is "Hello" printed?
   (a) 1 time (b) 2 times
   (c) 4 times (d) 3 times

23. The pure Round-Robin Scheduling policy:
   (a) Responds poorly to short processes if the time slice is small
   (b) Does not use any aPriori information about the service times of processes.
   (c) Ensures that the ready queue is always the same size.
   (d) Becomes equivalent to the shortest-job-first policy when the time slice is made infinitely large.

24. Matching the following pairs:

   List-I
   (A) Real time systems
   (B) Multiprogramming
   (C) Multiprocessor system
   (D) Multi threading

   List–II
   (M) Concurrency
   (N) Reduce context switch overhead
   (O) Time critical system
   (P) CPU utilization

   Codes:
   (a) A – M, B – N, C – O, D – P
   (b) A – M, B – O, C – N, D – P
   (c) A – O, B – P, C – M, D – N
   (d) A – O, B – M, C – N, D – P

Common Data for Q25, & Q26 is given below:

Consider the following instance of the problem using Round Robin CPU scheduling with Time slice of 3 units.

Scanned with CamScanner

Process	Arrival Time	Burst Time
1	6	10
2	4	7
3	2	3
4	7	2
5	3	7
6	5	8

25. What is the Schedule length?

(a) 36 (b) 39

(c) 40 (d) none

26. What is the throughput of the system?

(a) 0% (b) 10%

(c) 15% (d) 20%

27. Assume that you have the following jobs to execute with one processor:

P_i	B.T	A.T
0	74	0
1	40	10
2	25	10
3	21	80
4	45	85

Suppose the System uses Round Robin Scheduling with a time quantum of 15. The average waiting time for the processes is:

(a) 80 (b) 75

(c) 105 (d) none

Scanned with CamScanner

Solutions

01. Ans: (c)

Sol: The Highest Response ratio next is similar to shortest job next, but includes waiting time. It limits waiting time of longer jobs.

02. Ans: (d)

Sol: The state of a process is busy during context switch CPU scheduling can be Preemptive or Non–preemptive. In Non–preemptive scheduling the process may switch to waiting state or I/O state. In Preemptive scheduling the process switch when time slice/quantum is expired or another process completes I/O.

03. Ans: (d)

Sol: Definition of Multithreading, threads operates in the same way as that of process. Threads share code, data and files, but registers and stack are not shared.

04. Ans: (c)

Sol: Interrupt–driven I/O increases CPU utilization.

05. Ans: (d)

Sol: Threads share code, data and files, but not registers, stack and program counters (PC). Program counter indicates the address of the next instruction to be executed.

06. Ans: (b)

Sol: Process state Diagram

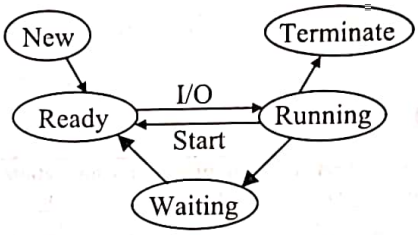

When timer starts: Ready → Running

I/O: Running → Ready

Timer out: Running → Ready

07. Ans: (c)

Sol: The turnaround time and response time depends on the size of the time slice. The average turnaround and response time are better than SJF.

08. Ans: (c)

Sol: p = A process spends its time waiting for I/O completion with 'n' process.

The probability of 'n' process waiting for I/O = p^n

CPU utilization

= 1– probability of n process waiting for I/O

= $1 - p^n$

09. Ans: (c)

Sol: FCFS

Process ID	Burst Time	Arrival Time	Submission Time	Completion Time	Turnaround Time
A	3	0.000	0	3	3
B	6	1.001	3	9	7.999
C	4	4.001	9	13	8.999
D	2	6.001	13	15	8.999

Scanned with CamScanner

Average Turnaround Time

= (3 + 7.999 + 8.999 + 8.999)/4

= 28.997/4

= 7.249

SJF

Process ID	Burst Time	Arrival Time	Submission Time	Completion Time	Turnaround Time
A	3	0.000	0	3	3
B	6	1.001	3	9	7.999
C	4	4.001	11	15	10.999
D	2	6.001	9	11	4.999

Average Turnaround Time

= (3 + 7.999 + 10.999 + 4.999)/4

= 6.749

SRTF

Process ID	Burst Time	Arrival Time	Submission Time	Completion Time	Turnaround Time
A	3	0.000	0	3	3
B	6	1.001	3.1001	15.001	14001
C	4	4.001	4.001	8.001	4
D	2	6.001	8.001	10.001	4

Average Turnaround Time

= 3 + 14.001 + 4 + 4/4

= 6.25025

∴ (a) & (b) are false, (d) is also false (c) is correct.

10. Ans: (c)

Sol: 'r' is the average time a process runs before I/O block and 's' is the time needed for switch.

The efficiency of the CPU = $\frac{r}{(r/q)*s+r}$

When $s = q$

$$\frac{r}{(r/q)*s+r} = \frac{r}{2r} = \frac{1}{2}$$

11. Ans: (d)

Sol: Process suspension occurs when

(i) Process swapping

(ii) OS interrupt

(iii) User request

(iv) Time out

(v) Request from parent

12. Ans: (c)

Sol: FCFS → The time spent in the system = waiting time + execution time.

SPN → minimum of total service time required by the process

SRT → minimum of total service time required by the process excluding execution time

HRRN → max(Time since arrival + service time of the process) / service time of the process

13. Ans: (c)

Sol: The order is 5 → 4 → 1 → 2 → 3

14. Ans: (d)

Sol: (a) FCFS:

A	B	C	D	E	

0 3 9 13 18 20

T_r = Turn around Time

= 3 +7 + 9 +12+12 = 43

T_s = Service Time = 3+6 + 4 +5+2 = 20

Average (T_r / T_s) = 43/20 = 2.15

Scanned with CamScanner

(b) Round Robin (q = 1)

A	A	B	A	B	C	B	C	D	B	C	D	E	B	C	D	E	B	D	D

0 1 2 3 4 5 6 7 8 9 10 11 12 13 14 15 16 17 18 19 20

Turn around time

$= 4 + 16 + 11 + 14 + 11 = 56$

Average $(T_r/T_s) = 56/20 = 2.8$

(c) HRRN:

A	B	C	E	D	

0 3 9 13 15 20

Turn around Time $= 3 + 7 + 9 + 14 + 7$

$= 40$

Average $(T_r/T_s) = 40/20 = 2$

priority C = (5+4)/4 = 2.25

priority D = (3+5)/5 = 8/5

= 1.6

priority E = (1+2)/2 = 3/2

= 1.5

(d) SRT:

A	B	C	E	B	D	

0 3 4 8 10 15 20

Turn around Time $= 3 + 4 + 2 + 13 + 14$

$= 36$

Average $(T_r/T_s) = 36/20 = 1.8$

b > a > c > d

15. Ans: (c)

16. Ans: (b)

Sol: RR(q = 4)

A	B	C	D	E	B	D	

0 3 7 11 15 17 19 20

Turn around Time $= 3 + 17 + 7 + 14 + 9$

$= 50$

Average Turn around Time = 50/5 = 10

Average Turn around Time of HRRN = 8

It 10 – 8 = 2 more

17. Ans: (d)

Sol: possible schedules are n!

18. Ans: (b)

Sol:

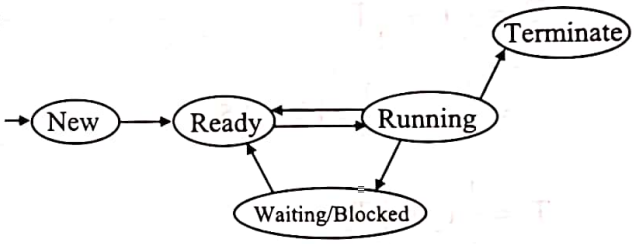

Ready → Running, Running → Blocked, Blocked → Ready are True.

Ready → Swapped – Blocked is not possible.

19. Ans: (d)

Sol: Multi-programming improves the CPU efficiency by increasing CPU utilization. It keeps more than one program in the memory and when a program needs I/O, it starts executing another program.

20. Ans: (c)

Sol: (I) is True

(II) is True

(III) is false because multilevel feedback Queue gives highest priority to any process with small CPU burst.

Scanned with CamScanner

21. Ans: (b)

Sol: The predicted length of the next CPU burst is

$T_{n+1} = \alpha\, t_n + (1-\alpha)\, T_n$

Where $t_n \rightarrow n^{th}$ CPU burst

T_n – past history

T_{n+1} – predicted value of next CPU burst

$\alpha = 0.5$, CPU bursts are 5, 8, 3, 5

$T_1 = 10$

$$T_2 = \frac{1}{2}t_1 + \frac{1}{2}T_1$$

$$= \frac{1}{2}\times 5 + \frac{1}{2}\times 10 = 7.5$$

$$T_3 = \frac{1}{2}t_2 + \frac{1}{2}T_2$$

$$= \frac{1}{2}\times 8 + \frac{1}{2}\times 7.5 = 7.75$$

$$T_4 = \frac{1}{2}t_3 + \frac{1}{2}T_3$$

$$= \frac{1}{2}\times 3 + \frac{1}{2}\times 7.75 = 5.375$$

$$T_5 = \frac{1}{2}t_4 + \frac{1}{2}T_4$$

$$= \frac{1}{2}\times 5 + \frac{1}{2}\times 5.375 = 5.1875$$

22. Ans: (c)

Sol: for loop runs 2 times.

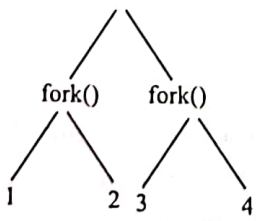

"Hello" printed 4 times

23. Ans: (b)

24. Ans: (c)

Sol: (a) Real Time systems – are Time dependent.

(b) Multiprogramming improves the efficiency of CPU by increasing CPU utilization.

(c) Multiprocessor systems ensure the concurrency.

(d) Multi Threading reduces the context switching.

25. Ans: (b)

Sol: RR(q = 3)

idle	3	5	2	6	1	4	5	2	6	1	5	2	6	1	

0 2 5 8 11 14 17 19 22 25 28 31 32 33 35 39

Length of schedule = 39

26. Ans: (c)

Sol: $\text{Throughput} = \dfrac{\text{number of processes}}{\text{length of schedule}} = \dfrac{6}{39} = 15\%$

Scanned with CamScanner

27. **Ans: (d)**

Sol: RR time quantum = 15

Process Id	Arrival Time	Burst Time	Submission Time	Completion Time	CT – AT = TAT	WT
0	0	74	0,45,85,140,176	190	190	116
1	10	40	15, 60, 100	110	100	60
2	10	25	30, 75	85	75	50
3	80	21	110, 155	161	81	60
4	85	45	125, 161, 190	205	120	75

0	1	2	0	1	2	0	1	3	4	0	3	4	0	4

0 15 30 45 60 75 85 100 110 125 140 155 161 176 190 205

$wT_0 = TAT_0 - BT_0 = 190 - 74 = 116$

$wT_1 = TAT_1 - BT_1 = 100 - 40 = 60$

$wT_2 = TAT_2 - BT_2 = 75 - 25 = 50$

$wT_3 = TAT_3 - BT_3 = 81 - 21 = 60$

$wT_4 = TAT_4 - BT_4 = 120 - 45 = 75$

Average waiting Time = (116 + 60 + 50 + 60 + 75)/5

= 72.2

Scanned with CamScanner

Chapter 2 Process Management-II

01. A solution to the critical section problem must satisfy all of the following conditions except:
(a) Mutual exclusion
(b) Progress
(c) Bounded waiting
(d) Hold and wait

02. _____ is a collection of procedures, data structures and variables that are all grouped together in a special kind of module or package, with the condition that the procedures cannot be accessed outside the three processes.
(a) Semaphore (b) Critical section
(c) Monitor (d) Critical region

103. A counting semaphore was initialized to 0, then 20V operations were successfully completed on this semaphore, followed with 18P operations, the resulting value of the semaphore is:
(a) 18 (b) 20
(c) 0 (d) 2

04. The drawback of Dekker's algorithm for mutual exclusion is:
(a) Does not Guarantee mutual exclusion sometimes
(b) Does not ensure progress
(c) Does not ensure bounded waiting
(d) Suffers from busy waiting

05. Consider the following program:

```
const int n = 5;
int count;
void test( )
{
        int i;
        for (i = 1; i<=n; ++i)
        {
                count ++;
        }
}
void main( )
{
        count = 0;
        parbegin
                test( );
                test( );
        parend;
}
write (count);
```

The minimum value of the shared variable count output by this concurrent program, with the assumption that a value can be incremented after it has been loaded into a register by a separate machine instruction is:
(a) 0
(b) 1
(c) 2
(d) None of the above

Scanned with CamScanner

06. A binary semaphore was initialized to 1 then 6p(wait) operations and 8v(signals) operations were completed on the semaphore. The value of the semaphore is:

(a) 3 (b) 1 (c) 0 (d) 2

07. A counting semaphore was initialized to 9. Then 27P operations and 23V operations were completed on this semaphore. The resulting value of the semaphore is:

(a) 5 (b) 0

(c) 7 (d) 13

08. The construct

cobegin Statement 1; Statement 2 coend; means Statement 1 and Statement 2 are to be executed in parallel. The only two atomic actions in this construct are loading the value of a variable and storing into a variable.

For the program segment.

```
x = 0;
y = 0;
cobegin
    begin
        x = 1;
        y = y + x;
    end;
    begin
        y = 2;
        x = x + 3;
    end
coend
```

How many different combinations are possible for x and y?

(a) 3 (b) 4 (c) 2 (d) 5

09. Let m[0].....m[4] be mutual exclusions (binary semaphores) and p[0].....p[4] be processes.

Suppose each process p[i] executes the following:

Wait (m[i]); wait (m[(i + 1) mod 4]); <cs>
release (m[i]); release (m[(i + 1) mod 4]);

This could cause

(a) Violation of mutual execution

(b) Deadlock

(c) Both (a) & (b)

(d) None

10. A Queue is used to hold processes waiting on the Semaphore.

Which of the following is ***true***?

I. A Semaphore whose definition includes FIFO policy is called a strong semaphore.

II. A Semaphore that does not specify the Order in which processes are removed from the queue is a Weak Semaphore.

III. Strong Semaphore guarantee freedom from Starvation.

IV. Weak Semaphore does not guarantee freedom from Starvation.

(a) Only I & II are true

(b) I, II & III are true

(c) I & III are true

(d) III & IV

Scanned with CamScanner

11. A Semaphore count of negative (n) means (s = –n) that the queue contains_____waiting process.
(a) n + 1 (b) n
(c) n – 1 (d) 0

12. Bernstein's conditions use the concepts of read-sets and write-sets to determine.
(a) If a group of processes and resources have become involved in a Deadlock.
(b) If there are any processes suffering from indefinite postponement.
(c) If a resource allocation request can be granted safely.
(d) If performing multiple operations in parallel will preserve determinacy.

13. For the program below, list possible values for 'x' if the program terminates.
Assume that variables are initialized as follows:

```
semaphore mx = 1;
semaphore m = 1;
    int x = 0;
    int y = 23;
cobegin
begin p(mx); p(m);
        x = x + 1;
        v(mx); v(m);
end;
begin p(m); p(mx);
        x = y + 1;
        v(m); v(mx);
end;
coend
```

(a) Always 24, 25
(b) Sometimes Deadlock and sometimes 24, 25
(c) Always Deadlock
(d) 1, 24, 25

14. Match the following:

List – I	List – II
(1) Peterson's Solution	(M) Busy waiting
(2) Semaphore	(N) Blocking
(3) Monitor	(O) Deadlock
(4) TSL	(P) Multi-process solution

Codes:
(a) 1 - P, 2 - M, 3 - N, 4 - O
(b) 1 - M, 2 - N, 3 - P, 4 - O
(c) 1 - O, 2 - M, 3 - N, 4 - P
(d) 1 - N, 2 - M, 3 - O, 4 - P

15. Process may be described as physically concurrent or logically concurrent. The distinction between these types of concurrency is analogous to the distinction between
(a) Synchronous processes & Asynchronous processes
(b) Real processors & virtual processors
(c) Explicit parallelism & implicit parallelism
(d) Batch processing & interactive processing

16. A condition variable in a monitor is associated with
(a) An integer variable, which is initially zero
(b) A Binary Semaphore, which is initially zero
(c) A Queue, which is initially empty
(d) A Boolean variable, which is initially false

Scanned with CamScanner

17. When the result of a computation depends on the speed of the processes involved, then it is said to be
(a) Process syncopation
(b) Time lock
(c) Cycle Stealing
(d) Race condition

18. In many cases, a group of co-operating processes must all arrive at a common location before any of them are permitted to proceed. This location is termed as
(a) An artificial rendezvous point
(b) A Barrier synchronization point
(c) A conditional critical region
(d) A synchronization bottle neck

19. Concurrent processes are
(a) Do not overlap in time
(b) Overlap in time
(c) Executed by a processor at the same time
(d) None of the above

20. Consider the following statements:
I. If the execution and I/O of an individual process can be overlapped, the process will have decreased response time.
II. Once a process attempts to enter its critical section, then it cannot be forced to wait for more than a bounded number of other processes to enter the critical section before it is allowed to do so.
III. A condition variable is a data structure that can only appear within a monitor.
(a) I, II are true & III is always false
(b) II & III are true & I is sometimes false
(c) I, II & III are always true.
(d) I, II & III are always false

21. Which of the following is *true*?
I. A Binary semaphore can be implemented with a counting semaphore.
II. A counting semaphore can be implemented with a Binary semaphore.
III. Mutual exclusion can ensure with both Binary & counting semaphore.
(a) I, II, III (b) I & II
(c) II & III (d) None

22. Consider the following code using co-begin-end

```
        X = 2;
cobegin
        X = x + 3;
        X = x + 1;
coend
```

The final possible values of 'X' are
(a) 3, 5 (b) 3, 4, 5
(c) 3, 5, 6 (d) 5, 3, 2

23. Consider the program given below using parbegin-parend.

```
Semaphore ml = 0, m = 1;
integer x = 0, y = 23;
parbegin
    begin
        V(ml);
        x = x +1;
        p(m);
    end
```


Scanned with CamScanner

```
        begin
                V(ml);
                x = y+1;
                p(ml);
        end
parend
```

What may be the final values of x?

(a) 1, 24, 25 (b) 24, 25

(c) 24, 25, Deadlock (d) None

24. Which of the following is NOT a reasonable justification for choosing to busy wait on an asynchronous event?
    (a) The program executes on a time sharing system.
    (b) There is no other work for the process to do
    (c) A busy – wait loop is easier to code than an interrupt handler
    (d) The wait is expected to be short.

25. Consider the following claims with regard to Readers / Writers problem?

    P: Only one Reader at a time may read a file.

    Q: Only one Writer at a time may write to a file.

    R: Any number of Writers may access the file.

    S: Any number of Readers may access the file.

    T: If Writer is writing to a file, no Reader may read it.

    U: If a Reader is reading a file, no Writer may write it.

    (a) P, Q, S, T, and U only
    (b) Q, S, T, and U only
    (c) P, Q, T and U only
    (d) Q, R, S and T only

26. A semaphore in which the processes are taken to ready queue in FIFO order is called HARD SEMAPHORE. A Semaphore in which no order is defined for the unblocking process is called SOFT SEMAPHORE. What data structures are used to keep the Blocked processes in Hard and Soft semaphore?
    (a) FIFO queue and Priority Queue
    (b) STACK and Queue
    (c) Tree and Priority queue
    (d) Arrays and STACK.

27. Consider a monitor program given below:

```
begin
int count = ϕ;
boolean initial = false;
condition flock ;
procedure wait( )
{
    count = count – 1;
    if (cont < ϕ)
    sleep (block);
}
procedure signal( )
{
    of count = count + 1 ;
    if (cont <= ϕ)
    Wakeup (flock) ;
}
```


Scanned with CamScanner

```
procedure init (int initial)
if (initialized = false)
{
    count = initial ;
}
```

What does the above monitor code implement?

(a) Readers – writers problem

(b) Counting Semaphore

(c) Binary Semaphore

(d) Barrier Synchronization

28. Consider the program given below

```
integer   x = 0,   y = 23;
semaphore   mx = 1, my = ϕ;
cobegin
    begin
            p(mx) ;
            x = x + 1;
            v(my) ;
    end
            begin
                    p(my) ;
                    x = y + 1;
                    v(mx) ;
            end
    coend.
```

What can be the final possible values of x?

(a) 1, 24 (b) 24, 25

(c) 24 (d) 1

29. How many Binary Semaphores are minimum required to implement the multiple readers writers problem with priority being given to readers over writer process?

(a) 1 (b) 2

(c) 3 (d) none

30. Consider the following concurrent program using parbegin - parend and Binary semaphores:

```
integer x = 0, y = 20;
semaphore Sx = 1, Sy = 1;
parbegin
begin
        P(Sx);
        P(Sy);
        x = x+1;
        V (Sy);
        V(Sx);
end
        begin
            P(Sy);
            P(Sx);
            x = y+2;
            V(Sx);
            V(Sy);
        end
parend
```

What are the final possible values of x?

(a) x = 1, 23, 22

(b) x = 23,22

(c) x = 22, 23 & deadlock is possible

(d) x = 23, 1 deadlock

Scanned with CamScanner

31. Consider the following code solving the problem of critical Resource, between two processes:

```
int flag:
int interested [2] = {ϕ};
void Entry – section (int i)
{
    int j ;
    j = 1 – i ;
    interested [i] =1;
    flag = j;
    while (interested [j] = 1 and flag = j);
}
```

The above solution:

(a) Guarantees mutual exclusion and progress condition always

(b) Mutual exclusion is Guaranteed but not progress

(c) Neither mutual exclusion nor progress is guaranteed

(d) It guarantees mutual exclusions, satisfies progress among processes but is not free from deadlock.

32. When the concurrent processes given below are executing, what relationship will exist between the values of the shared variable count1 and count2? Also assume that the processes can execute at any speed & that the value can only be incremented after it has been loaded into an Accumulator by a separate machine instruction.

```
var
blocked : array [0..1] of Boolean;
turn, count1, count2 : integer;
procedure process (id:integer);
begin
    repeat
        blocked [id] = true;
        while (turn ! = id)
        begin
        while (blocked [1-id]) do;
        turn = id;
        end;
    count1 = count1 + 1;
    blocked [id] = false;
    count2 = count2 + 1;
    until false
    end;
begin
blocked [0] = false;
blocked [1] = false;
turn = 0;
count1 = count2 = 0;
    parbegin
    process (0);
    process (1);
    parend;
end
```

(a) Count1 and count2 will remain equal.

(b) Count1 will remain greater than or equal to count2.

(c) Count2 will remain greater than or equal to count 1.

(d) The values of count1 and count2 will exhibit no consistent relationship.

Scanned with CamScanner

Solutions

01. Ans: (d)

Sol: The critical section problem must satisfy

1. **Mutual Exclusion:** only one process at a time in the critical section.
2. **Ensure process:** outside the critical section one process should not block other process.
3. **Bounded waiting time:** only limited number of times other processes can enter the critical section while another process is waiting.

02. Ans: (c)

Sol: Monitors consists of procedures, initialization sequences a local data. Local data is accessible through only monitors procedure. Only one process is executing at a time in monitor.

03. Ans: (d)

Sol: Initially semaphore value S = 0

20 V ⇒ S = S + 20 = 20

18 P ⇒ S = S – 18 = 2

04. Ans: (d)

Sol: Dekker's algorithm guarantees mutual exclusion, freedom from deadlock and freedom from starvation. One disadvantage is that it is limited to two processes and makes use of busy waiting instead of process suspension.

05. Ans: (d)

Sol: Count is shared variable

count++ is written as register1 = count

register1 = register1 + 1

count = register1

In execution is parallel

∴ The value count cannot be predictable.

06. Ans: (b)

Sol: Binary semaphore initialized to s = 1

6p ⇒ s = s – 6 = – 5

8v ⇒ s = s + 8 = 3 mod 2 = 1

07. Ans: (a)

Sol: Counting semaphore s = 9

27 P ⇒ s = s – 27 = 9 – 27 = – 18

23 V ⇒ s = s + 23 = – 18 + 23 = 5

08. Ans: (b)

Sol: 4 different combinations are possible

(1) x = 1, y = 2, y = y + x, x = x + 3

(2) x = 1, y = 2, x = x + 3, y = y + x

(3) y = 2, x = 1, y = y + x, x = x + 3

(4) y = 2, x = 1, x = x + 3, y = y + x

09. Ans: (c)

Sol: If each process gets preempted after wait(m[i]); i = 0 to 4 then deadlock occurs and also violation of mutual exclusion.

10. Ans: (d)

Sol: A strong semaphore guarantee freedom from starvation but not weak semaphore.

Scanned with CamScanner

11. Ans: (b)

Sol: Semaphore value s = –n means there are n processes waiting in queue.

12. Ans: (d)

Sol: Multiple operations performed in parallel are preserved.

13. Ans: (b)

Sol: Deadlock occurs when process1 executes p(mx); p(m) then

process2 executes p(m); p(mx);

then process1 and process2 are in deadlock state. In other cases its value will be 24, 25

14. Ans: (b)

Sol: Peterson's solution for achieving mutual exclusion – Busy waiting

Semaphore for Blocking the waiting process

Monitor for Multi process solution.

TSL or Test Set lock executes without being interrupted – Deadlock.

15. Ans: (b)

Sol: Real processors and virtual processors

Real processors – More than one processor exists and runs parallel

Virtual processors – Single processor executes multiple processes concurrently

16. Ans: (d)

Sol: In a Monitor only one process is active at a time. For this a Boolean is initialized to false.

17. Ans: (d)

Sol: When the order of process completion and the relative speed of execution does make a difference the problem is called a race condition.

18. Ans: (b)

Sol: Definition of Barrier synchronization point.

19. Ans: (b)

Sol: Concurrent process overlaps in time

20. Ans: (c)

Sol:
- Response time decreases when execution and I/O of the process overlaps
- Critical section problem must ensure bounded waiting time
- To allow a process to wait within the monitor, a condition variable must be declared and is used within the wait and signal operations.

21. Ans: (c)

Sol: Counting semaphore – Inter value, range is unrestricted

Binary semaphore – Inter value between only 0 and 1

Both counting and Binary semaphores can be used for implementing mutual exclusion.

Counting semaphore can be implemented using Binary semaphore.

22. Ans: (c)

Sol: x = 2

if it executes x = x+ 3 = 2 +3 = 5

Scanned with CamScanner

if it executes $x = x + 1 = 2 + 1 = 3$

if it executes $x = x + 3$ then $x = x + 1$

$\Rightarrow x = 6$

The possible values are 3, 5, 6.

23. **Ans: (a)**

24. **Ans: (a)**

Sol: (b), (c) and (d) are correct

(a) is not reasonable

25. **Ans: (b)**

Sol: **P:** is false because any number of Readers can read.

R: is false because only one writer may access the file.

26. **Ans: (a)**

Sol: Hard Semaphore uses FIFO Queue where as Soft Semaphore uses priority queue.

27. **Ans: (b)**

Sol: The Monitor uses two operators wait( ) and signal( ).

The given code implementing counting semaphore.

28. **Ans: (c)**

29. **Ans: (a)**

Sol: Only one Binary semaphore

Readers have priority if a reader is in critical section any number of readers could enter irrespective of any writer waiting to enter cs.

30. **Ans: (c)**

31. **Ans: (a)**

Sol: The code guarantees mutual exclusion and progress as only one process is allowed to enter into cs.

32. **Ans: (d)**

Sol: Count1 and Count2 are inconsistent because Count1 and Count2 are shared variables.

Scanned with CamScanner

Chapter 3 Deadlocks

01. Resource Request algorithm is used for which of the following:
(a) Deadlock prevention
(b) Deadlock avoidance
(c) Deadlock detection
(d) Deadlock recovery

02. If the Resource-Allocation Graph contains 'm' types of resources and 'n' processes, then the time complexity of the algorithm for deciding whether system is safe or unsafe is:
(a) $O(n^2 \times m)$ (b) $O(n \times m)$
(c) $O(n^2 \times m^2)$ (d) $O(n \times m^2)$

03. A system has two processes and three identical resources. Each process needs a maximum of two resources. This could cause
(a) Deadlock is possible
(b) Deadlock is not possible
(c) Starvation may be present
(d) Thrashing

04. A solution to the Dining Philosophers problem which avoids Deadlock is:
(a) Ensure that all philosophers pick up the left fork before the right fork.
(b) Ensure that all philosophers pick up the right fork after the left fork.
(c) Ensure that one particular philosopher picks up the left fork before the right fork and that all other philosophers pick up the right fork before that left fork.
(d) None of the above.

05. A computer has 11 Tape drivers with n-Processes competing for them. Each Process may need 3 drivers. What is the maximum value of 'n' for the System to be Deadlock free _____.

06. A system is composed of four processes, {p1, p2, p3, p4}, and three types of resources, {R1, R2, R3}. The number of resources are C=<3, 2, 2>.
1. Process P1 holds 1 unit of R1 and requests 1 unit of R2.
2. P2 holds 2 units of R2 and requests 1 unit each of R1 and R3.
3. P3 holds 1 unit of R1 and requests 1 unit of R2.
4. P4 holds 2 units of R3 and requests 1 unit of R1.

Which of the following statement is ***correct***?
(a) P1 must be executed as a third process in the safe sequence
(b) P3 must be executed as a third process
(c) Safe sequence does not exist
(d) None of the above

07. Consider the following precedence graph?

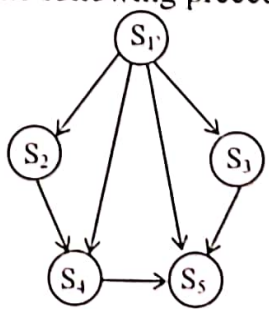

Scanned with CamScanner

The above precedence graph can be represented

(a) By using fork and join constructs only

(b) By using parbegin, parend constructs only

(c) Both (a) and (b)

(d) None of the above

08. Which approach "Invoke Periodically to test for deadlock".

(a) Deadlock Avoidance

(b) Deadlock Prevention

(c) Deadlock Detection

(d) All approaches "Invoke Periodically to test for deadlock"

09. Which of the following is true for the Banker's Algorithm?

(a) It is used to prevent Deadlock

(b) It is used to avoid Deadlock

(c) It cannot be used for a system with many resources, each of which is unique with no multiple copies.

(d) An unsafe situation will always lead to a deadlock.

10. Consider the concurrent program given below:

S_1:
    $C_1 = 3$
    Fork L_1 ;
S_2 ;
S_4 ;
    C_2 ; = 2 ;
    Fork L_2 ;
S_5 ;
    Goto L_3 ;
L_2 : S6
L_3 : join C_2 ;
    S_7 ;
    Goto L_4 ;
L_1 : S_3 ;
L_4 : join C_2 ;
S_8 ;

What is the graph of the above program?

(a)
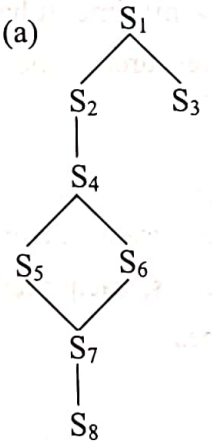

(b)
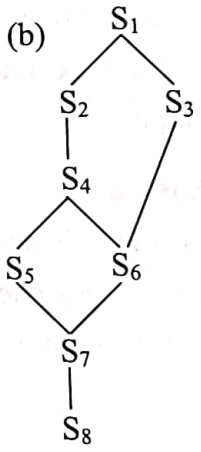

(c)
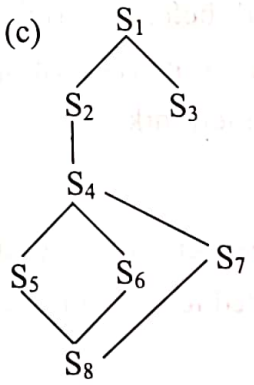

(d)
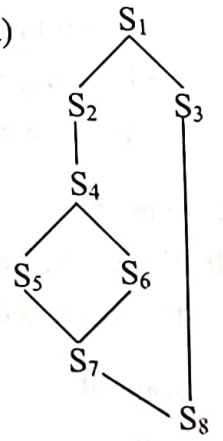

Scanned with CamScanner

Solutions

01. Ans: (b)

Sol: The Resource–Request Algorithm allocates the requested resources if there is no possibility of Deadlock. It avoids Dead lock.

02. Ans: (a)

Sol: To check whether the system is safe or unsafe, it requires $O(n^2 \times m)$ time. It has to check the cycle in the Resource Allocation graph.

03. Ans: (b)

Sol: Deadlock is not possible, because there are 3 resources and 2 processes, each needs a maximum of two resources.

04. Ans: (c)

Sol: Ensure that one particular philosopher picks up the left fork before the right fork and that all other philosophers pick up the right fork before that left fork.

05. Ans: 5

Sol: With n>5, we can see there will be deadlock (2 resources distributed for each process)

06. Ans: (d)

Sol:

	Allocation			Requested		
	R_1	R_2	R_3	R_1	R_2	R_3
P_1	1	0	0	0	1	0
P_2	0	2	0	1	0	1
P_3	1	0	0	0	1	0
P_4	0	0	2	1	0	0

Initial Resources			Available		
R_1	R_2	R_3	R_1	R_2	R_3
3	2	2	1	0	0

P_4 executed first, next P_2 is executed, then next either P_1 or P_3 is executed.

07. Ans: (b)

Sol:
S_1
parbegin
S_2
S_3
S_4
S_5
parend

08. Ans: (c)

Sol: Deadlock Detection → Periodically checks the Deadlock.

09. Ans: (b)

Sol: To Avoid Deadlock we use Banker's algorithm.

10. Ans: (d)

Sol: Fork L_1 creates S_2 and S_3
Fork L_2 creates S_5 and S_6
Goto L_3 join S_7
Goto L_4 join S_8
L_1 is followed by L_4

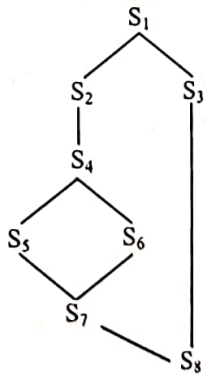

Scanned with CamScanner

Chapter 4 Memory Management

01. The objective of the memory manage should be:
(a) To maximize the CPU utilization
(b) To optimize the usage of memory space
(c) To reduce the memory access time
(d) All of the above

02. How many 256 × 4 RAM chips are needed to organize a memory of capacity 32 KB?
(a) 128 (b) 256
(c) 512 (d) 32

03. Consider the machine with 64 MB physical memory and a 34 bit virtual address space. If the page size is 4 KB, the approximate sizes of conventional & inverted page table sizes are;
(a) 4M, 4K (b) 4K, 4M
(c) 4M, 16K (d) 16K, 4M

04. Consider a system that has 4K pages of 512 bytes in size in the logical address space. The physical memory contains 1024 frames. The number of bits of logical and physical address is:
(a) 19, 21 (b) 20, 22
(c) 22, 20 (d) 21, 19

05. What hit ratio is required to reduce the effective memory access time, from 200 nsecs to 140 nsecs, if the cache access time is 20 nsec?
(a) 85% (b) 40%
(c) 90% (d) 95%

06. The purpose of translation look aside buffer in segmentation scheme is for;
(a) Reducing the effective memory access time
(b) Speed up the program execution
(c) Avoids unnecessary writes onto the disk
(d) Contain the locality of the program

07. For a page size of 200 words, what is the page number and offset for a logical address of 1142
(a) 5, 142 (b) 2, 142
(c) 6, 142 (d) 7, 140

08. Which of the following statements is false?
(a) Virtual memory implements the translation of programs address space into physical memory address space.
(b) Virtual memory allows each program to exceed the size of the primary memory.
(c) Virtual memory increases the degree of multiprogramming
(d) Virtual memory reduces the context switching overhead.

Scanned with CamScanner

09. Consider the following segment table:

Segment	Base	Length
0	219	600
1	2300	14
2	90	100
3	1327	580
4	1952	96

What is the physical address of the logical address 110?

(a) Trap (b) 2310
(c) 329 (d) 109

10. Given the average size of a process is ***P***, the page size is ***S***, and the size of a page table entry is ***e***, what page size minimizes wasted space due to internal and table fragmentation?

(a) $P = 2\sqrt{se}$ (b) $P = \sqrt{2Se}$
(c) $S = \sqrt{2P}$ (d) $S = (2Pe)^2$

11. A process references five A, B, C, D and E, in the following order:

A, B, C, D, A, B, E, A, B, C, D, E for the LRU page replacement algorithm, with 4 frames, the number of page faults with pure demand paging is :

(a) 7 (b) 8
(c) 9 (d) 10

12. A machine has 48-bit virtual addresses and 32 bit physical addresses. Pages are 8K. How many entries are needed for a conventional page table? For an inverted page table?

(a) 2^{35} (b) 2^{19}
(c) 2^{32} (d) None

13. Main memory is partition into Chunks in

I. Simple Paging.
II. Virtual memory Paging
III. Simple segmentation.
IV. Virtual memory segmentation

(a) I & III (b) I & II
(c) I, II and III (d) All

14. Match the following:

M. Compaction	1. Page fault
N. Virtual memory	2. Runtime address binding
O. Demand paging	3. Fragmentation
P. Priority inversion	4. Deadlock

Codes:

	M	N	O	P
(a)	1	2	3	4
(b)	3	1	2	4
(c)	3	1	4	2
(d)	3	2	1	4

15. _____ is the technique which shifts the necessary process images to bring the free chunks to adjacent positions in order to coalesce.

(a) Compaction
(b) External fragmentation
(c) Internal fragmentation
(d) Decompression

16. A computer has a 32–bit virtual address space and 1024 byte pages. A page table entry takes 4 bytes. A multilevel page table is used because each table must be contained within a page. How many levels are required?

Scanned with CamScanner

(a) 1 – level (b) 2 – levels
(c) 3 – levels (d) none

17. On a simple pages system, associative registers hold the most active page entries and the full page table is stored in the main memory. If references satisfied by the associative registers take 100ns and references through the main memory page table take 180 ns, what must the hit ratio be to achieve an effective access time of 125 ns?
(a) 68.75 % (b) 68.25 %
(c) 70.5% (d) none

18. On a system using demand paging, it takes 200 ns to satisfy a memory request if the page is in memory. If the page is not in memory, the request takes 7 ms if a free frame is available or the page to be replaced is not modified. It takes 15 ms if the replaced page is modified. What is the effective access time if the page fault rate is 5% and 60% of the time the page to be replaced has been modified?
(a) 600.19 μs (b) 590.19 μs
(c) 790.19 μs (d) None

19. Spatial Locality refers to the problem that once a location is reference.
(a) It will not be referenced again
(b) It will be referenced again
(c) A nearby location will be referenced soon
(d) None of the above.

20. In a paged memory the page hit ratio is 0.35. The time required to access page in secondary memory is equal to 100 ns. The time required to access a page in primary memory is 10 ns. The average time required to access a page is
(a) 3 ns (b) 68 ns
(c) 68.5 ns (d) 78.5 ns

21. In a system using paged Memory Management, The size of Logical Address spaces is 32 MB. The page table entry size is 4 Bytes. What is the optimum page size in Bytes?
(a) 16 KB (b) 16 MB
(c) 256 KB (d) 15 KB

22. Consider a paged virtual memory system with 32 bit virtual addresses & 1KB pages. Each page table entry contains 32 bits. It is desired to limit the page table size to one page. How many levels of page tables are required?
(a) 2 (b) 3
(c) 4 (d) none

23. A process contains eight virtual pages on disk and is assigned a fixed allocation of four page frames in main memory.
The following page track occurs 1, 0, 2, 2, 1, 7, 6, 7, 0, 1, 2, 0, 3, 0, 4, 5, 1, 5, 2, 4, 5, 6, 7.

How many page faults will it cause using L.R.U. policy?
(a) 13 (b) 15
(c) 17 (d) none

Scanned with CamScanner

24. Suppose

R = 3, 2, 4, 3, 4, 2, 2, 3, 4, 5, 6, 7, 7, 6, 5, 4, 5, 6, 7, 2, 1

is a page reference stream. Given a window size of 6 & assuming the primary memory is initially unloaded, How many page faults will the given reference stream incur under the working set algorithm?

(a) 7 (b) 8
(c) 6 (d) none

25. Because of the _____behavior of programs, the process needs to use only a subset of all the pages for execution at any given time.

(a) Locality (b) Re entrant
(c) Abnormal (d) Dual mode

26. A Byte–Addressable computer that uses paged–memory management has a 24 bit virtual address space. The lower 9–bits of a virtual address represent the offset. The maximum number of entries in the page map table for a process is

(a) 32 K (b) 32 M
(c) 64 K (d) 16 K

27. Match the following:

List–I

(P) Paging
(Q) Overlays
(R) Segmentation
(S) TLB

List–II

(1) Spatial locality
(2) Programmer's view of Memory allocation
(3) Non – contiguous allocation
(4) Independent modules

Codes:

(a) P – 1, Q – 2, R – 3, S – 4
(b) P – 2, Q – 3, R – 1, S – 4
(c) P – 3, Q – 4, R – 2, S – 1
(d) P – 3, Q – 4, R – 1, S – 2

Statement for linked answer Q28 and Q29 is given below:

Consider the following reference String:

1, 2, 3, 4, 5, 3, 4, 1, 6, 7, 8, 7, 8, 9, 7, 8, 9, 5, 4, 5, 4, 2.

Using optional page replacement algorithm with 4 frames.

28. How many page faults, will it cause?

(a) 11 (b) 12
(c) 13 (d) 9

29. If the main memory access time is 1ms and page fault service time is 30 ms with the page fault rate of the question number 42, what is the effective access time?

(a) 18ms (b) 15ms
(c) 20ms (d) 30ms

Scanned with CamScanner

30. A swapping system has free space in the following order 5K, 10K, 30K, 8K and 2K. Which of the following schemes use the same hole sequence (in order) for the segment request of 3K, 2K and 12K?

(a) First fit and best fit but not next fit(start at the first hole)

(b) First fit and next fit (start at first hole) but not best fit.

(c) First fit, best fit, next (start at first hole) but worst fit.

(d) First fit and best fit and next fit (start at the first hole) but not worst fit.

Scanned with CamScanner

Solutions

01. Ans: (b)

Sol: Optimization of memory usage.

02. Ans: (b)

Sol: Number of memory chips required

$$= \frac{\text{memory required}}{\text{chip size}}$$

$$= \frac{32\text{ KB}}{256 \times 4} = \frac{32 \times 1024 \times 8}{256 \times 4} = 256$$

03. Ans: (c)

Sol: Physical memory = 64 MB = $2^6.2^{20}$B = 2^{26}B

Page size ps = 4 KB

Virtual Address space LA = 34 bits

Number of pages

$$= \frac{\text{LAS}}{\text{PS}} = \frac{2^{34}}{4\text{KB}}$$

$$= \frac{2^{34}}{2^{12}} = 2^{22} = \mathbf{4\ M}$$

Number of frames

$$= \frac{\text{PAS}}{\text{PS}} = \frac{2^{26}}{2^{12}} = 2^{14} = 16\text{KB}$$

Number of bits needed to locate all frames

= 14 bits

Page table size

= Number of pages × page table entry

= 1 M × 1 B = 4 M

Size of Inverted page table

= number of frames × page table entry

= 16 K × 1 B = **16 K**

04. Ans: (d)

Sol: Number of pages = 4 K

Page size PS = 512 B = 2^9 B

$$\text{Number of pages} = \frac{\text{LAS}}{\text{PS}}$$

⇒ LAS = Number of pages × PS

= 4 K × 2^9 B

= $2^{12} \times 2^9$ B = 2^{21} B

Virtual Address = 21 bits

Number of frames = 1024

$$\text{Number of frames} = \frac{PAS}{PS}$$

⇒ PAS = Number of frames × PS

= 1024 × 2^9 B = $2^{10} \times 2^9$ B

= 2^{19} B

Physical Address = 19 bits

05. Ans: (b)

Sol: EMAT = hm + (1 – h) (c + m)

EMAT = 140 nsec

c = 200 nsec

m = 20 nsec

20 h + (1– h) (200 + 20) = 140

20 h + 220 – 220 h = 140

200 h = 80

$$h = \frac{80}{200} = \frac{2}{5} = 0.4 \Rightarrow \text{Hit ratio} = 40\%$$

06. Ans: (a)

Sol: TLB reduces the effective Address Translation and access time.

Scanned with CamScanner

07. Ans: (a)

Sol: logical address = 1142

Offset = 142

$$page\ number = \frac{1142}{250} = 5$$

08. Ans: (d)

Sol: Virtual memory properties

09. Ans: (b)

Sol: logical address = 110

1 is segment number, 10 is offset

Physical address = Base + offset

= 2300 + 10 = 2310

10. Ans: (a)

Sol: Overhead due to page table and internal fragmentation $= \frac{s.e}{P} + \frac{P}{2}$

Minimization of waste = optimal page size

$$\frac{s.e}{P} = \frac{P}{2} \Rightarrow P = 2\sqrt{se}$$

11. Ans: (b)

Sol: LRU Algorithm

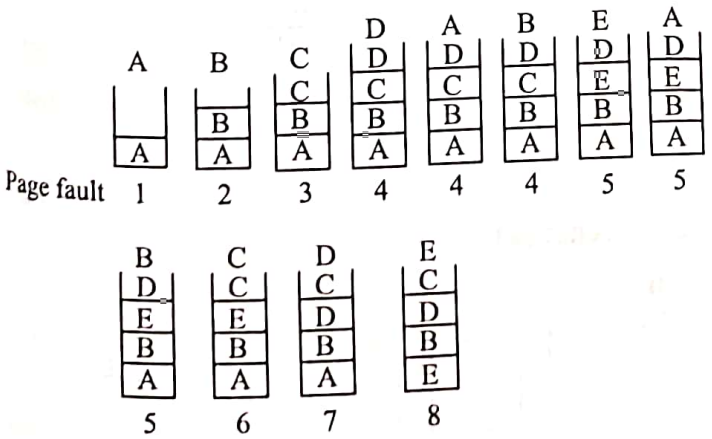

8 page faults

12. Ans: (b)

Sol: LAS = 2^{48} B

PAS = 2^{32} B

Page Size PS = 8 K = $2^3.2$ B = 2^{13} B

$$\text{Number of pages} = \frac{LAS}{PS} = \frac{2^{48}}{2^{13}} = 2^{35}$$

$$\text{Number of frames} = \frac{2^{32}}{2^{13}} = 2^{19}$$

13. Ans: (b)

Sol: The main memory is partitioned into simple paging and virtual memory paging.

14. Ans: (d)

Sol: **Compaction:** Combining fragments as a large block-Internal and external fragmentation occurs when a process is allocated more memory than required.

Virtual Memory: Runtime Address Binding

Demand Paging: When page fault occurs

Priority Inversion: Deadlock free

15. Ans: (a)

Sol: Definition of compaction.

16. Ans: (c)

Sol: LA = 32 – bits

LAS = 2^{32} Bytes

Page Size = 1024 bytes = 2^{10} bytes

Page table entry = 4 Bytes = 2^2 Bytes

$$\text{Number of entries} = \frac{\text{page size}}{\text{page table entry}}$$

$$= \frac{2^{10}}{2^2} = 2^8$$

Scanned with CamScanner

$$\text{Number of pages} = \frac{\text{LAS}}{\text{page size}} = \frac{2^{32}}{2^{10}}$$

$$= 2^{22} \text{ pages}$$

$$\text{Number of levels} = \frac{22}{8} = 2.75 \approx 3$$

17. Ans: (d)

Sol: Effective Access Time (EAT) = 125 ns

EAT $= (100)n + (100 + 180)(1-n)$

Where n = bit ratio

$125 = 100n + 280 - 280n + 280n = 155$

$$n = \frac{155}{180} = 86.11\%$$

18. Ans: (b)

Sol: EAT

$= (1-P)^{0.2\mu s} + (0.4\,P \times 7000\mu s + 0.6P \times 15000\mu s)$

Where P = hit rate = 5% = 0.05

$= 0.95 \times 0.2 + (0.4 \times 0.05 \times 7000 + 0.6 \times 0.05 \times 15000)\mu s$

$= 590.19\ \mu s$

19. Ans: (c)

Sol: Properties of Spatial Locality.

20. Ans: (c)

Sol: Average page access time

$= P \times$ access time of primary memory $+ (1-P) \times$ access time of secondary memory

$= 0.35 \times 10 + 0.65 \times 100$

$= 68.5$ ns

21. Ans: (a)

Sol: LAS = 32 MB $= 2^5 \times 2^{20}$ B $= 2^{25}$ B

Page Table entry size = 4 B $= 2^2$ B

Page Size $= 2^K$, where K is unknown

$$\text{Page Table Size} = \frac{\text{LAS}}{\text{Page Size}} \times \text{Page Table entry}$$

$$= \frac{2^{25}}{2^k} \times 2^2 = 2^{27-k}$$

Optimal page size Page Table Size = Page Size

$2^{27-K} = 2^K$

$\Rightarrow 27 - K = K$

$\Rightarrow 2K = 27$

$K = 13.5 \approx 14$

Page Size $= 2^{14} = 2^4$ KB = 16 KB

22. Ans: (b)

Sol: LAS $= 2^{32}$ B

Page Size = 1 KB $= 2^{10}$ B

Page Table entry = 32 bits $= 2^2$ B

$$\text{Number of pages} = \frac{\text{LAS}}{\text{Page Size}} = \frac{2^{32}}{2^{10}} = 2^{22}$$

$$\text{Size of Page Table} = \frac{\text{Page Size}}{\text{Page Table entry}}$$

$$= \frac{2^{10}}{2^2} = 2^8$$

$$\text{Number of levels} = \frac{22}{8} = 3$$

23. Ans: (a)

Sol:

Pages:	1	0	2	2	1	7	6
	1	1	1	1	1	1	1
		0	0	0	0	0	6
			2	2	2	2	2
						7	7
Cumulative page fault	1	2	3	–	–	4	5

Scanned with CamScanner

7	0	1	2	0
1	1	1	1	1
6	6	6	2	2
2	0	0	0	0
7	7	7	7	7
–	6	–	7	–

Pages:	3	0	4	5	1	5
	1	1	4	4	4	4
	2	2	2	5	5	5
	0	0	0	0	1	1
	3	3	3	3	3	3
Cumulative page fault	8	–	9	10	11	–

2	4	5	6
4	4	4	4
5	5	5	5
1	1	1	6
2	2	2	2
12	–	–	13

Number of page faults = 13

24. Ans: (a)

Sol: window size = 6

3 2 4 3 4 2 2 3 4 5 6 7 7 6 5 4 5 6 7 2 1

$wss(t_1)=\{2,3,4\}$ t_1 $wss(t_2)=\{5,6\}$ t_2 $wss(t_3)=\{\ \}$ t_3 t_4 $wss(t_4)=\{1\}$

Number of page faults = 3 + 3 + 0 + 1 = 7

25. Ans: (a)

Sol: Definition of locality.

26. Ans: (a)

Sol: LA = 24 bits

LAS = 2^{24} B

Offset = 9 bits

Page number = 15 bits

Entries in the page table = 2^{15} = 32 K

27. Ans: (c)

Sol:

→ Paging for non–contiguous allocation.

→ Overlays for independent modulus.

→ Segmentation for programmer view of memory Allocation.

→ TLB uses spatial locality

28. Ans: (d)

Sol:

Reference String:	1	2	3	4	5	3	4	1
	1	1	1	1	5	5		5
		2	2	2	2	2	–	1
			3	3	3	3		3
				4	4	4		4
Cumulative Page faults:	1	2	3	4	5	–	–	6

6	7	8	7	8	9	7	8	9
6	6	6			6			
1	1	1	–	–	9	–	–	–
3	7	7			7			
4	4	8			8			
7	8	9	–	–	10	–	–	–

5	4	5	4	2
5	5			5
9	9	–	–	9
7	4			4
8	8			2
11	12	–	–	13

Number of page faults = 9

29. Ans: (a)

Sol: Total number of referenced pages = 22

$$EAT = \frac{9}{22} \times 1 + 30 \times \frac{13}{22}$$

$$= 18.13 \text{ ms}$$

30. Ans: (d)

Sol: First fit, Best fit & Next fit uses 5K hole for 3K segment but worst fit uses 30k hole.

Scanned with CamScanner

Chapter 5 File Systems

01. A_____is a buffer that holds output for a device such as printer, that cannot accept interleaved data streams.

(a) Cache (b) Spool
(c) Directory (d) Buffer

02. The UNIX I-node may contain all of the following except for:

(a) Link count
(b) Block size
(c) Disk block addresses
(d) File name

03. The UNIX I-node contains 8-direct disk block addresses, a single indirect and a double indirect entry, for a disk block of size 2 KB and 16 bit disk block addresses, the maximum file size supported will be;

(a) 2.0 G (b) 2.01 M
(c) 2.018 M (d) 2.018 G

04. Consider a disk, whose track holds 16 sectors of size 512 bytes each. The disk is double interleaved. The rotation rate of the disk is 4000 rpm. The effective data rate supported by this disk is:

(a) 540 MB/S (b) 546 KB/S
(c) 540 KB/S (d) 600 KB/S

05. Suppose that a disk drive has 5000 tracks, numbers 0 to 4999. The drive is currently serving a request at track 143, and the previous was at track 125.

The queue of pending requests, in FIFO order, is 86, 1470, 913, 1774, 984, 1509, 1022, 1750, 130 starting from the current position, the total distance in terms of tracks movement for SSTF is:

(a) 640 (b) 246
(c) 350 (d) None

06. Which of the following disk-scheduling discipline is fair?

(a) FCFS (b) LOOK
(c) SCAN (d) SSTF

07. Disk requests are received by a disk drive for cylinders 5, 25, 18, 3, 39, 8 and 35 in that order. 4 seek takes 5 msec per cylinder moved. How much seek time is needed to serve these requests for a shortest seek first (SSF) algorithm? Assume that the arm is at cylinder 20 when the last of these requests is made with name of the requests yet served.

(a) 125 msec (b) 295 msec
(c) 575 msec (d) 750 msec

Scanned with CamScanner

Data for Q08 is given below. Solve the problems and choose correct answer.

Consider six files : F_1, F_2, F_3, F_4, F_5, F_6 with corresponding sizes 100, 200, 70, 40, 250 and 50 respectively, the files are to be stored on a sequential device in such a way that as to optimize access time.

08. In what order should the files be stored
(a) $F_6, F_5, F_4, F_3, F_2, F_1$
(b) $F_1, F_2, F_3, F_4, F_5, F_6$
(c) $F_5, F_2, F_1, F_3, F_6, F_4$
(d) $F_4, F_6, F_3, F_1, F_2, F_5$

09. Consider the following statements:
I. With the increase in Disk block size, the throughput also increases.
II. Thrashing slow down the process execution time by several orders of magnitude.
III. A thread cannot read the stack of another thread, even if that other thread is in the same process.
IV. Monitor is a busy waiting construct.
Which of the above statement(s) is/are ***true***?
(a) I, II & III
(b) I, II, III & IV
(c) I, II, IV
(d) IV only

10. Consider a disk with the following specifications. Disk block size is 'S' bytes; Disk block address is 'D' bits, Disk size is 'B' bytes. 'K' of the total Blocks are in use. What is the total space consumption under free list and bit map methods?
(a) $\frac{B(1+D)-KDS}{S}$
(b) $\frac{(B(1+D)-DS)}{S}$
(c) $\frac{B}{S}+\left(\frac{B-K}{S}\right)D$
(d) $\left(\frac{B}{S}+K.D\right)$

11. Suppose sharing of files in a multilevel directory structure is achieved with directory entries that are links pointing to a node containing information about a shared file. Information in this node includes
(1) The owner of the file.
(2) A count of the number of links to the file.
(3) The disk block numbers of the file.

What is a primary drawback to this approach to sharing?
(a) If the owner modifies the file, another user who does not share will see the changes.
(b) If the owner renames the file, other users will not be able to access it.
(c) If any user who shares the file appends to it, others who share it will not be able to access the new disk blocks.
(d) If the owner is allowed to delete a file, dangling links may result.

12. A disk file contains 32–byte fixed size records. Physical I/O is in terms of 512 byte blocks that are stored in an Operating System buffer. If a process sequentially reads through a file's records, what % of the read requests will result in I/O operation?
(a) 10 %
(b) 8.5 %
(c) 6.75 %
(d) 6.25 %

Scanned with CamScanner

13. Consider a disk with the following specifications:

Number of platters	= 16
Number of suffices / platter	= 2
Number of tracks / surface	= 512
Number of sectors / track	= 2K
Sector overhead	= 48 bytes
Sector size excluding overhead	= 2000 bytes

What is the unformatted disk capacity in bytes?

(a) 64 GB (b) 128 GB
(c) 256 GB (d) 32 GB

14. An application loads 500 libraries at startup. Loading each library requires exactly one disk access. The seek time of the disk to a random location is given as 10ms. Rotational speed of disk is 6000rpm. If all 500 libraries are loaded from random locations on the disk, how long does it take to load all libraries? (The time to transfer data from the disk block once the head has been positioned at the start of the block may be neglected)

(a) 6.70s (b) 6.50s
(c) 7.50s (d) 7.00s

15. Consider an in Code having 10 direct DBA's, A single indirect and 2 double indirect DBA's. Disk block size is 64Bytes and DBA is 16 bits. What is the maximum possible file size in this system?

(a) 4 MB (b) 1450 × 4 Bytes
(c) 2090 × 64 Bytes (d) 4180 × 64 Bytes

16. Calculate the Number of disk blocks needed using the free list method. Given disk block address is 16 bits, disk block size is 64Bytes, total disk blocks are 4096 out of which 1024 are free blocks.

(a) 128 (b) 64
(c) 256 (d) 32

Scanned with CamScanner

Solutions

01. Ans: (b)

Sol: By Spool definition

02. Ans: (d)

Sol: Unix/Linux File System

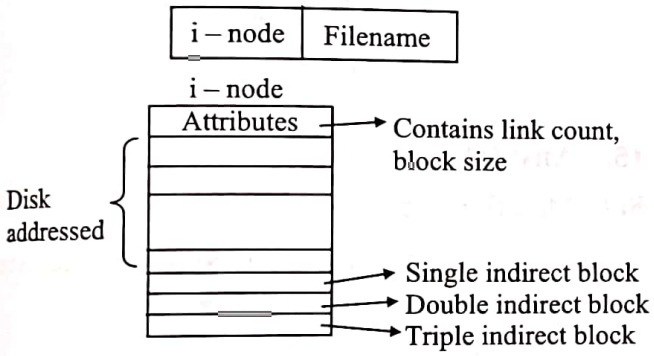

03. Ans: (d)

Sol: Maximum file size

$= 8 * 2KB + 1K * 2KB + 1K * 1K * 2KB$

$= 2.018$ G

04. Ans: (c)

Sol: Number of sectors/track = 16

Sector size = 512 bytes

Notation Time = 4000 rpm

60 sec → 4000

1 sec → x

$$\text{Rotation Time per sec} = \frac{4000}{60}$$

$$\text{Effective Data rate} = 16 \times 512 \times \frac{4000}{60} B$$

$= 540$ KB/S

05. Ans: (d)

Sol: FIFO

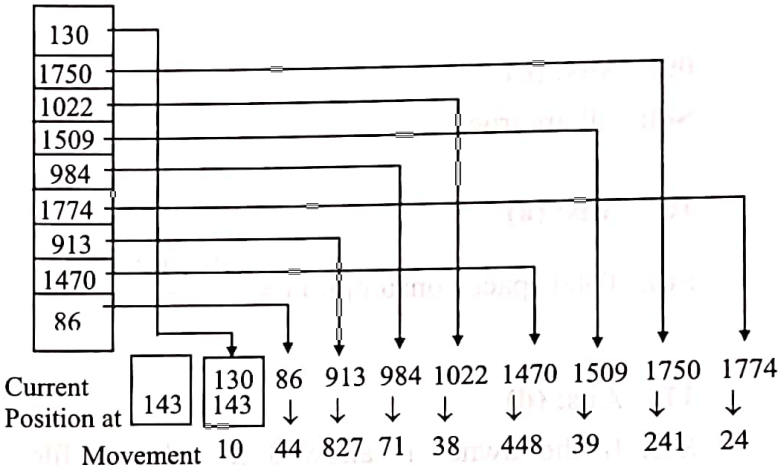

Total distance

$= 10+44+827+71+38+448+39+241+24$

$= 1742$

06. Ans: (a)

Sol: FCFS serves according to the request but LOOK, SCAN and SSTF uses different approach.

07. Ans: (b)

Sol:

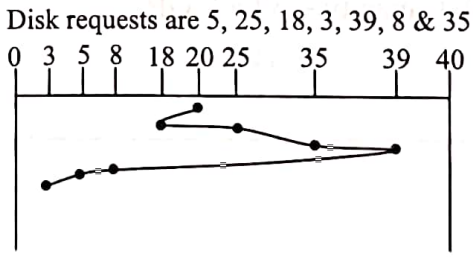

arm is at 20 cylinder

$= 2 + 7 + 10 + 4 + 31 + 3 + 2$

$= 59$ cylinder

Total seek time $= 59 \times 5 = 295$ msec

Scanned with CamScanner

08. Ans: (c)

Sol: First sort the files in decreasing sizes. Then access the files one by one.

09. Ans: (b)

Sol: All are true.

10. Ans: (a)

Sol: Total space consumption $= \dfrac{B(1+D)-KDS}{S}$

11. Ans: (d)

Sol: If the owner is allowed to delete a file, dangling links may result.

12. Ans: (d)

Sol: The % of read request $= \dfrac{32}{512} = 6.25\%$

13. Ans: (a)

Sol: Surface capacity = 512 × 2K × 2048 B

$= 2^9 \times 2^{11} \times 2^{11} = 2^{31}$

= 2 GB

Disk Capacity = 32 × 2 GB

= 64 GB

14. Ans: (c)

Sol: Total time

= 500 × (seek time + rotational latency + transfer time)

Rotational Latency

= 1/2(time for one rotation)

= 1/2(60/6000) = 5ms

= 500 × (10 + 5 + 0)

= 7500ms

= 7.50s

15. Ans: (c)

Sol: Max file size

= (Total number of blocks)*Disk block size

= (10 + 32 + 2*1024) * 64 B

= 2090 * 64 Bytes

16. Ans: (d)

Sol: In free list method, we are concerned about only free blocks. We have to store the addresses of free blocks.

There are 1024 free blocks and each disk block can hold 64/2 = 32 addresses.

Therefore to hold 1024 addresses, we require 1024/32 = 32 disk blocks

Scanned with CamScanner

Theory of Computation

Scanned with CamScanner

Chapter 1 Finite Automata & Regular Sets

01. The set of all proper sub-strings of the string 0110 is
(a) {ε, 1, 01, 011, 0110}
(b) {ε, 0, 01, 011, 11, 110}
(c) {ε, 0, 01, 011, 1, 11, 110, 0110}
(d) None of the above

02. The language $L=\{a^n b^n | 0<n<327^{th}$ prime number$\}$ is
(a) Regular set
(b) Finite set
(c) Context free
(d) Not context sensitive

03. What can be said about a regular language over {0} whose minimal finite automata has two states?
(a) L must be {x | x has odd number of 0's}
(b) L must be {y | y is of even length}
(c) $L=0^*$
(d) Either L must contain strings over 0 that are of odd length or that are of even length

04. Consider the following languages:
L1: {ww | w in Σ* and Σ = {0, 1}}
L2: {x | x is a palindrome in $\{a, b\}^*$}
L3: {y | y has an even number of 0's and y in $\{0\}^*$}
L4: {z | z in $\{0\}^*$ and the length of z is a perfect square}
Which of the following languages are regular?
(a) Only L1 & L2
(b) Only L2, L3 & L4
(c) Only L3 & L4
(d) Only L3

05. The minimal finite automata accepting the strings in $r=0^*1^*$ has ____ states.

06. Which of the following regular expressions are equivalent?
(a) (rs)* r = r(sr)*
(b) r* + s* = (r + s)*
(c) r(r + sr + rss)* rs = s(r + sr)* rs
(d) r******* = r*

07. For a finite automata of n states the maximum length of strings that must be considered to distinguish two states is
(a) n
(b) n–1
(c) n–2
(d) none of the above

08. Consider the homomorphism h(a)=11 and h(b)=10. Consider the inverse homomorphism of the regular set $(01+00)^*$
(a) The resulting set is empty
(b) The resulting set is 00^*
(c) The resulting set is infinite
(d) None of the above

Scanned with CamScanner

09. Which of the following statements is *incorrect*?

(a) $b^*a^* \cap a^*b^* = a^* \cup b^*$

(b) If L is regular, then $L^1 = \{w \mid uw \in L$ for some string u$\}$ is regular

(c) The language $\{w \mid ww = www\}$ is regular

(d) The language $L = \{w \mid$ for some $u, v \in \Sigma^*$, $uvw = wvu\}$ contains only a subset of Σ^*

10. The number of states are there in the minimal DFA for the language $\{L(10^*10^*1) \cup L(01^*01^*0)\}$ is _____.

11. $L_n = \{w \in \{0, 1\}^{2n}$:w is not of the form $uu^R\}$ Where u^R is the reverse of u (Note that all the words in L_n are of length 2n).
The number of states in the minimal DFA for L_n is

(a) Atleast 2^n (b) Less than 2^n

(c) 2^{n-1} (d) None of the above

12. Let $k \geq 2$ and L be the set of strings in $\{0,1\}^*$ such that $x \in L$ if and only if the number of 0's in x is divisible by k and the number of 1's in x is odd. The minimum number of states in a DFA that recognizes L is

(a) k+2 (b) 2k

(c) k logk (d) 2^k

13. If w is a string, let w^R be the reverse of w. For example, aabc is the reverse of cbaa. Let A= {a,b,c}. Find a grammar to describe the language $\{ww^R \mid w \in A^*\}$

(a) $S \rightarrow aSa \mid aaS \mid Sbb \mid cSc$

(b) $S \rightarrow \varepsilon \mid aSa \mid caSca$

(c) $S \rightarrow \varepsilon \mid abSba$

(d) $S \rightarrow \varepsilon \mid aSa \mid bSb \mid cSc$

14. Choose ***incorrect*** statement from the options given below?

(a) If L is accepted by an n - state NFA then L is accepted by some 2^n - state DFA

(b) $\varphi^* = \varphi \cup \varepsilon$

(c) For every $n \geq 1$, there is an 2n - state DFA for the language $0\{0, 1\}^n$

(d) If $M = (Q, \Sigma, \delta, q_0, F)$ is an NFA $F = Q$ then $L(M) = \Sigma^*$

15. Choose the ***wrong*** statement?

(a) The class of all 2DFA's is countably infinite.

(b) The class of all CFLs can be put into a one to one correspondence with the finite sets.

(c) The class of all R.E sets can be put into a one to one correspondence with the class of all finite sets.

(d) The class of all formal languages over {a} is countably infinite.

16.

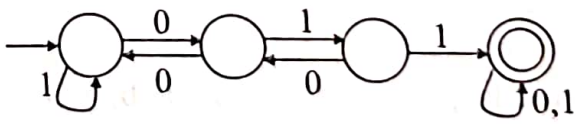

Consider the DFA given above.
Let S denote all the seven bit strings accepted by M in which the first, fourth and seventh bits are 1's.

Scanned with CamScanner

The number of strings in S accepted by M is

(a) 9 (b) 6

(c) 10 (d) 12

17. The Mealay machine given below:

δ	0	1
Q0	Q0/0	Q1/1
Q1	Q2/2	Q3/3
Q2	Q4/4	Q0/0
Q3	Q1/1	Q2/2
Q4	Q3/3	Q4/4

(a) Represents a mod 5 counter

(b) Checks for primes

(c) Checks for an even number of 0's and an odd number of 1's

(d) None of the above

18. The left linear grammar given below generates

$H \rightarrow Ha \mid a,\ S \rightarrow Hb$

(a) $(a+b)^+$ (b) aa* b

(c) a*b (d) none of the above

19. The minimal finite automata accepting the set of all strings over {0,1} starting with a 1 that interpreted as the binary representation of an integer are congruent to 0 modulo 5 has ____ states.

20. The language $\{ww^R \mid w \text{ in } (a+b)^+\}$ is

A. Context sensitive

B. R.E set

C. Recursive set

D. CFL

(a) B > C > A > D (b) A > B > C > D

(c) A > D > C > B (d) B > A > C > D

For Questions 21 & 22, there are two statements Assertion (a) and Reason (r).

Choose

(a) Both [a] and [r] are true and [r] is the reason for [a].

(b) Both [a] and [r] are true but [r] is not the correct reason for [a].

(c) Both [a] and [r] are false.

(d) [a] is true but [r] is false.

21. **Assertion:** [a] The language L = set of all strings not containing 1000001 as a substring is a regular set.

Reason: [r] L is infinite and satisfies the pumping lemma for regular sets.

22. **Assertion:** [a] The language L = set of all strings where every pair of consecutive 0's occurs before any pair of adjacent 1's is accepted by some DFA of 10 states.

Reason: [r] L is accepted by a 5 state minimal DFA.

23. Match the following:

Language	Minimal FA accepting the same has number of states
P. Set of all strings in (0+1)* treated as a binary integer are congruent to 2 modulo 5	1. 5
Q. $(0+1)^+$	2. 2
R. Set of all strings in [00+11+(01+10) (00+11)*(01+10)]*	3. 4
S. $\{a^n \mid n<=100\}$	4. 102
	5. 6
	6. 7

Scanned with CamScanner

(a) P – 1, Q – 5, R – 3, S – 4
(b) P – 6, Q – 4, R – 3, S – 5
(c) P – 1, Q – 3, R – 6, S – 2
(d) P –1, Q – 2, R – 3, S – 6

24. The language of primes in unary is
(a) Regular (b) CFL
(c) DCFL (d) Context sensitive

25. The Moore machine M given below

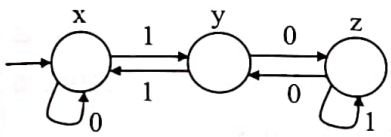

(a) Represents a mod 3 counter
(b) Represents a mod 4 counter
(c) Checks an even number of 0's and an odd number of 1's and multiples of three 0's
(d) None of the above

26. The language set of all strings not of the form ww, w in (a+b+c)* is accepted by a
(a) DFA
(b) NFA
(c) Deterministic Turing machine
(d) 2DFA

27. Consider the NFA given below.

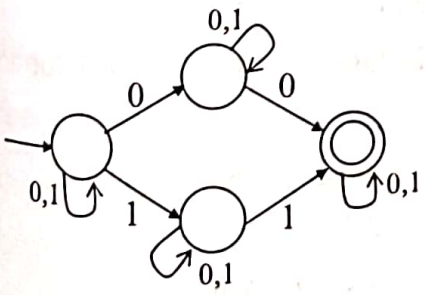

Let M_1 be the NFA obtained by interchanging the final and non-final states of M. Let the language accepted by M be L and that accepted by M_1 be L_1. Choose the ***correct*** statement?
(a) $L_1=L$ (b) $L_1 \sqcap L=\varphi$
(c) $L_1 \subseteq L$ (d) $L_1 = (0+1)^*$

28. The set accepted by the finite automata (FA) given below is best described as

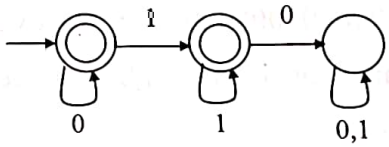

(a) 0*1* (b) (0+1)*
(c) 0*11* (d) 0*11*0

29. The language generated by the grammar
S → aA | bB | aD
D → aD | bD | aA
A → a | bB
B → a
Will be accepted by a
A. DPDA B. FA C. LBA D. PDA
(a) C > D > A > B (b) A > B > C > D
(c) D > C > B > A (d) A > D > B > C

30. The regular expression (aa)*+a(aa)* is the same as
(a) (a+aa+aaa)*
(b) aaa* + aaaaa*
(c) (aaa)*a(a*+aa*)
(d) none of the above

Scanned with CamScanner

31. The minimal finite automata over the alphabet {0,1} accepting the set of all strings over the alphabet has ___ states.

32. Consider a DFA:
1000000000000000000000000000000000000
0000000000000000000000000000000000000
0000000000000000000000000000000000000
0000000000000000000000000000000000000
0000000000000000000000000000000000000
0000000000000000000 states over the input alphabet consisting of all the Greek alphabet letters.
What can we say about it?
(a) It is not possible that it accepts the empty set i.e. no string is accepted by it.
(b) It is not possible that it accepts only the empty string.
(c) It is not possible that it accepts strings of length 1 only.
(d) It is possible that it accepts all strings over the input alphabet.

33. The regular expression denoting the set of all strings not containing two consecutive 1's and not containing two consecutive 0's is
(a) $(0+10)(\varepsilon + 0) + (1+01)(\varepsilon+1) + \varepsilon$
(b) $(0+10)^*(\varepsilon +1)$
(c) $(1+01)^*$
(d) $(\varepsilon + 0)(101)^*(\varepsilon + 0)$

34. Choose the *true* statement:
(a) The minimal finite automata accepting the set of all strings over {0, 1} where the 100th symbol from the right end is a 0 has a googol no. of states.
(b) The minimal finite automata accepting the set of all strings over an alphabet of 1000000000000000000000000000000 symbols has over 4 states.
(c) The minimal finite automata accepting the set of all odd numbered strings over a finite alphabet which has between 1001 to 2001 symbols has 51 states.
(d) The minimal finite automata accepting the empty set is not unique and is the same as the minimal finite automata that accepts the empty string.
(e) None of the above.

35. Choose the non-regular set
(a) $L = \{a^i b^j c^k \mid i < j < k < 1\,2\,3\,4\,5\,6\,7\,8\,9\,8\,7\,6\,5\,4\,3\,2\,1\}$
(b) $L = \{a^i b^j c^k \mid i > j > k > 12345\}$
(c) $L = \{a^i b^j \mid j = i*i*i*i\}$
(d) $L= \{0^m 1^n 0^{m+n} \mid m,n>=1 \text{ and } m,n<1 \text{ zillion}\}$

36. Consider the set of strings bacon, no Cab
Ban campus motto, "Bottoms up, MacNab".
Bar: canoe on a crab. Bar crab.
Barge in. Relate mere war of 1991 for a were-metal Ernie grab.
Barge Dave, evade grab.
Be still--it's Eb!
"Bed stress!" asserts Deb.

Scanned with CamScanner

Bedded, I videotape Elsa asleep (a toe-divided Deb.)

Bald elf fled lab

Bell: a clang is a signal-call, Eb.

Beware era web!

"Baltimore paper, omit lab!"

Bird rib.

"Boredom a la mode, Rob?"

(a) All the above strings are palindromes and the language of palindromes is a regular set.

(b) All of the above strings are palindromes and the language of all palindromes is a DCFL.

(c) All the above strings are palindromes and the language of all palindromes over some alphabet (binary or more), which is finite, is not a CFL.

(d) All the above strings are palindromes and the language of all palindromes is a context sensitive language.

37. The language consisting of an equal number of p's, i's, g's and s's can be accepted by

(a) DPDA (b) NFA

(c) PDA (d) LBA

38. The minimal finite automata accepting the set denoted by $(a+b)^*(aa+bb)$ has

(a) 3 states (b) 4 states

(c) 5 states (d) 6 states

39. What can be said about a regular language L over the alphabet {a, b} whose minimal finite state automation has two states?

(a) L may contain all strings of a's and b's where each string contain number of a's even.

(b) L may contain all strings of a's and b's where each string contain number of b's odd.

(c) Both (a) and (b).

(d) None of the above.

40. If R and S are languages over the alphabet {a, b} and R is Regular Language and S is polynomially reduced to R, then S is_____.

(a) Context Free Languages

(b) Context Sensitive Languages

(c) Recursively Enumerable Languages

(d) None of the above

41. Consider the following DFA,

$M = (Q = \{p, q, r, s, t, u, v, w\},$

$\Sigma = \{0, 1\}, \delta, p, p)$

$\delta(p,1) = p,$	$\delta(p,0) = p,$
$\delta(q,0) = r,$	$\delta(q,1) = q,$
$\delta(r,0) = r,$	$\delta(r,1) = q,$
$\delta(s,0) = r,$	$\delta(s,1) = q,$
$\delta(t,0) = r,$	$\delta(t,1) = q,$
$\delta(u,1) = (s),$	$\delta(u,0) = t,$
$\delta(v,0) = u,$	$\delta(v,1) = u,$
$\delta(w,0) = s,$	$\delta(w,1) = s$

Scanned with CamScanner

Using partition algorithm the above DFA is minimized, then the number of states of DFA in the minimal DFA is _____.

(a) 1 (b) 2

(c) 6 (d) 8

42. The minimal number of states require for the DFA that accepts the set of all strings where each string contain atmost one pair of consecutive 0's and atmost one pair of consecutive 1's is _____.

43. Which of the following statements is TRUE about the regular expression 01*0?

(a) It represents set of all strings starts with 0.

(b) It represents set of all strings ends with 0.

(c) It represents set of all strings starts with 0 ends with 0.

(d) It represents set of all strings.

(e) None of the above.

44. The number of states in the minimized DFA, which will accept all strings whose 2nd and 8th symbol from the left hand side is 'a' and 'b' respectively is _____.

45. Let $\Sigma = \{0, 1\}$, $L_1 = \Sigma^*$ and $L_2 = \{0^n1^n | n \geq 1\}$, then the languages $L_1 \cup L_2$ and L_2 are respectively

(a) Regular, regular

(b) Regular, non-regular

(c) Non-regular, regular

(d) Non-regular, non-regular

46. If there is a complete DFA M_1 accepting the language L_1 and has m states out of which two are final states. Then the number of final states in DFA accepting the language L_1^c is _____.

(a) m+2 (b) m (c) m – 2 (d) 2

47. Which of the following is a regular language?

(a) $L = \{0^n \mid n \text{ is a perfect square}\}$

(b) L = {set of all strings over {0,1} and of the form ww^c},(w^c is complement of w)

(c) Set of all balanced parenthesis strings

(d) $L = \{0^m 1^n \mid mn \geq 10\}$

48. Which of the following is ***true*** for Moore and mealy Machines?

(a) Both the machines give same length output for every input string.

(b) Both the machines are language acceptors.

(c) Both the machines are output generators.

(d) Both of them are non deterministic.

49. Let $\Sigma = \{a, b, c, d, e, f\}$. The number of strings in Σ^* of length 4 such that no symbol is used more than once in a string is _____.

50. A finite machine having finite tape length without rewinding capability and unidirectional tape movement is called

(a) Turing machine (b) PDA

(c) DFA (d) All of these

Scanned with CamScanner

51. Define deterministic infinite automata in the same way that DFAs are defined, with the only difference that the states can be infinite, and so is the set of accepting states. What languages are accepted by deterministic infinite automata?
(a) Regular languages only.
(b) Regular, context free and recursive languages only.
(c) Any language L over Σ^*.
(d) None of the above.

52. Consider the following languages
If L is regular language then
$L_{1/2} = \{x \mid \text{for some } y, |x| = |y| \text{ and } xyz \in L\}$
$L_{1/3\text{-}1/3} = \{xz \mid \text{for some } y, |x| = |y| = |z| \text{ and } xyz \in L\}$
$L_3 = \{ww \mid w \in \{0, 1\}^n\}$
Which of the following statements is ***true*** regarding the above languages?
(a) $L_{1/2}$ is regular but not $L_{1/3\text{-}1/3}$ and L_3
(b) $L_{1/2}$, L_3 are regular but not $L_{1/3\text{-}1/3}$
(c) $L_{1/2}$, $L_{1/3\text{-}1/3}$ are regular but not L_3
(d) $L_{1/2}$, $L_{1/3\text{-}1/3}$ and L_3 are regular

53. The regular expression a*(ab*)* is the same as
(a) b*(ab*)*b*
(b) a* + b*
(c) (aba)*(a*+b)
(d) none of the above

54. Description of DFA: A DFA over the alphabet {0, 1, 2} which rejects all strings starting with a 1 or 2 and a string starting with a 0 takes the DFA from the start state which is a final state to a non-accepting state.
Consider the DFA described above. Let S denote all the seven bit strings where the first, fourth and seventh bits are 1's. The number of strings in S accepted by M is _____.

55. The Mealy machine M which recognizes all strings over {0, 1} where the last two symbols are the same has
(a) Three states
(b) Must have 4 states
(c) Must have more than 4 states
(d) None of the above

Statement for Linked answer Q56 and Q57 is given below.

Let L_1 ={w | w has equal number of {a,b,c,d,e,f}}
Let L_2 ={wwwwwww|w in {a,b,c,d,e,f}*}
Let L_3 = {The set of all strings in {a,b,c,d,e,f}*}

56. Choose the ***correct*** statement?
(a) $L_1 = L_3$ but L_1 is not the same as L_2.
(b) $L_1 = L_2 = L_3$
(c) $L_2 = L_3$ but L_1 is different
(d) L_1, L_2 and L_3 are all different

57. The sets L_1, L_2 and L_3 are all
(a) Regular and finite
(b) CSL but not finite
(c) CFL but not regular
(d) R.E. and not CFL

Scanned with CamScanner

58. Which of the following regular expression over the alphabet {0,1} denotes the set of all strings contain an even number of 0's and even number of 1's ?
(a) (00+11+(00+11)*(01+10))*
(b) (00+11+(01+10)(00+11)*)*
(c) (00+(01+10)(00+11)*(01+10))*
(d) (00+11+(01+10)(00+11)*(01+10))*

59. The main limitation of finite state machine is that
(a) It cannot remember arbitrary large amount of information
(b) It sometimes recognizes grammars that are not regular
(c) It sometimes fail to recognize grammars that are regular
(d) Both (a) and (c)

60. The deterministic finite automaton M has final state q_D. Which of the following regular expressions denote the set of all words accepted by M?

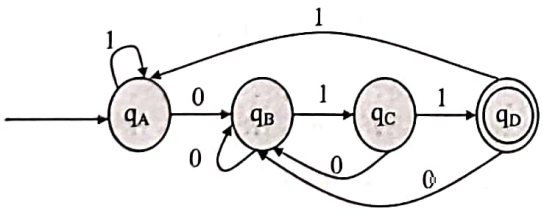

(a) 001 (b) 10*1*0
(c) 1*0*011 (d) None of these.

61. The length of a string is the number of symbols in it. The length of ε is _____.

62. The two regular expressions $a(ra)^*$ and $(ar)^*a$
(a) Both denote the same set
(b) Both denote CFLs
(c) Both denote different sets
(d) Both are equivalent to $(a+r)^*$

63. Choose the non-regular sets:
(a) The set of all strings over {0, 1} where every three consecutive 0's occur before three consecutive 1's and when the string is interpreted as the binary representation of an integer it is congruent to 0 modulo 5.
(b) The set of all strings over {0, 1} that do not start and end with 1001 and whose tenth symbol from the right and left ends is a 1.
(c) The set of all strings over {0, 1} that do not contain the substring 0001 or the substring 00000110 or the substring 111100000.
(d) The set of all strings over {0, 1} that are palindromes which have the same number of 0's and 1's.

64. In the figure shown in a DFA, M

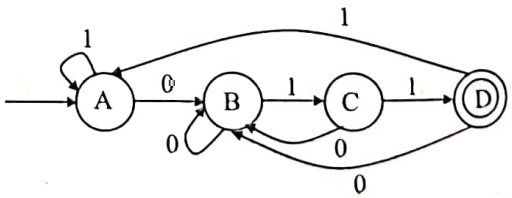

Which of the following regular expression denote the set of all words accepted by M?
(a) 1*0*001 (b) (0/1)*011
(c) 1*0*11 (d) (0/1)0*1*0

Scanned with CamScanner

65. The regular expression
(1+ 01 + 001 + 0001) (ε + 0 + 00 + 000)
denotes
(a) The set of all strings over {0, 1}.
(b) The set of all strings over {0, 1} not containing four consecutive 0's.
(c) The set of all strings over {0, 1} containing four consecutive 0's.
(d) None of the above.

66. The minimal finite automata accepting the set of all strings in (0 + 1 + 2 + # + $)* where the number of 0's is divisible by 2, the number of 1's is divisible by 3, the number of #'s is divisible by 4 and the $'s are divisible by 5 is _____.

67. The complement of the language
{wwwww | w in (0 + 1 + @ + # + $ + %)*} is
(a) Finite set (b) Regular set
(c) CFL (d) CSL but not CFL

Common Data for Q.68 & Q.69 is given below.

Ashok takes two regular sets L_1 and L_2.
He forms a new set L_3 by concatenating L_1 and the reversal of L_2^*
He forms a new set L_4 by substituting regular sets for the symbols in L_3
He forms a new set L_5 by taking the first half of the strings of L_4.
He forms a new set L_6 by taking the reversal of the last half of each string in L_4.

68. Choose the ***correct*** answers:
(a) L_4 is a CFL and L_5 and L_6 are CSLs.
(b) L_4 is always a finite set.
(c) L_5 and L_6 can never be regular.
(d) L_3, L_5 and L_6 can never be finite sets.

69. Choose the ***correct*** answer:
(a) L_6 is R.E. and L_3 is a CSL.
(b) L_6 is not R.E and L_1 is a finite set sometimes.
(c) L_4 and L_5 are never recursive.
(d) L_4 and L_3 are never regular

70. The set of all strings over {0, 1} where every block of 7 consecutive symbols contains atleast two 0's and three 1's is
(a) A finite set.
(b) A regular set that is not finite.
(c) A context free language that is not finite.
(d) A R.E. set that is not finite.

71. The non-deterministic and deterministic models of the following automata are equivalent in power in the sense that they accept the same class of languages
(a) Turing machines and push down automata.
(b) Turing machines and finite automata.
(c) Finite automata and push down automata.
(d) Linear bounded automata and push down automata.

Scanned with CamScanner

72. The regular expression denoting the set of all strings over {(,)} that are well formed parenthesis strings is
(a) Regular
(b) CFL
(c) DCFL but not a CFL
(d) R.E but not a CFL

73. Match the following:

Regular expression	Equivalent regular expression
P. $(00)^* + 0(00)^* + 000^*0^*0$	1. 0^*
Q. $(a + aa^* + aa^*a)^*$	2. $(a^* + aaaaa^*)$
R. $(\varepsilon + R)^*(\varepsilon + RRRR)^* + (\varepsilon + R)^* (\varepsilon + RR)^*$	3. $R^*R^*R^*R^*$
	4. $(a + aa + b^* + bb^*)^*$
S. $\varphi^*(a + b)^*$	5. $(R + S)+$
	6. $(ab)^{***}a^*$

(a) P–1, Q–2, R–3, S–4
(b) P–6, Q–4, R–3, S–5
(c) P–1, Q–3, R–6, S–2
(d) P–1, Q–2, R–3, S–6

74. Consider all palindromes even if they are sentences in English which are of finite length. Let this language L be
(a) L is a regular set
(b) L is a finite set
(c) L is a DCFL
(d) L is a CFL

75. Language generated by Regular Expression $(1 + 01)^* (0 + 01)^*$ is
(a) Strings of 0's and 1's where 00 is followed by 11.
(b) Strings of 0's and 1's where 00 is not followed by 11.
(c) Strings of 0's and 1's where 11 is followed by 00.
(d) Strings of 0's and 1's where 11 is not followed by 00.

Scanned with CamScanner

Solutions

01. Ans: (d)

Sol: 0 1 1 0

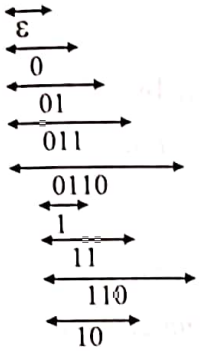

02. Ans: (a)

Sol: All numbers upto the 327th prime number from a finite set. Every finite set is a regular set.

03. Ans: (d)

Sol:

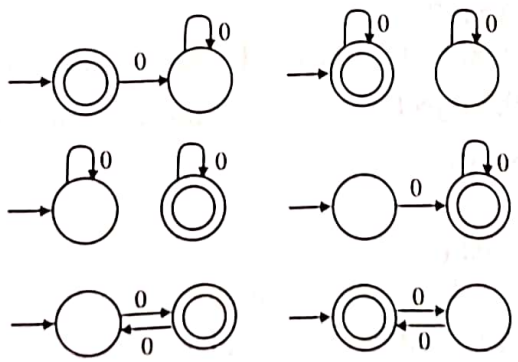

04. Ans: (d)

Sol: (a) L1 is a standard CSL.

(b) L2 is a standard CFL.

(c) L3 can be expressed by a regular expression.

(d) L4 is a standard CFL.

05. Ans: 2

Sol: $r = 0^* 1^*$

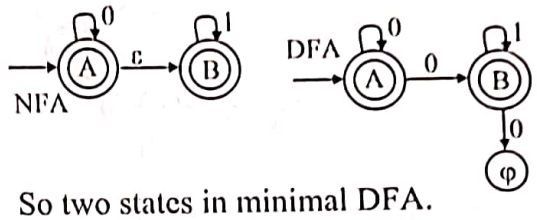

So two states in minimal DFA.

06. Ans: (a) & (d)

Sol: (a) $(rs)^* r = r(sr)^*$ is a standard identity

(b) is false

(c) is false as it always starts with r on lhs & s on rhs

(d) is true

07. Ans: (c)

Sol: Let n = 3

See diagram

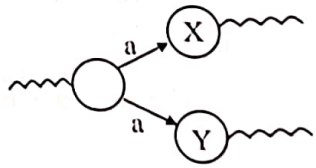

A string of length n–2=1 distinguish between X & Y

08. Ans: (a)

Sol: neither 1's nor 10 can occur in the regular set.

09. Ans: (d)

Sol: (a) $b^* a^* \cap a^* b^*$

$= (b^* + a^*) \cap (a^* + b^*) = a^* \cup b^*$

(b) The tails of a regular set is regular

(c) This is a finite set.

By elimination the answer is (d)

Scanned with CamScanner

10. Ans: 7

Sol: The DFA

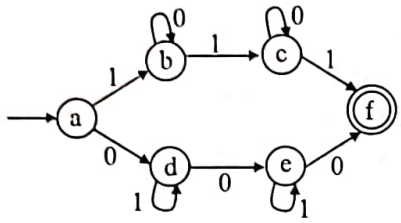

11. Ans: (a)

Sol: L_n is a finite set & m must distinguish between 2^n strings.

12. Ans: (b)

Sol: M_1: 0's require k states

M_2: 1's require 2 states

The answer is $M_1 \times M_2$ or 2k states

13. Ans: (d)

Sol: Put a mirror in S. we have the mirror language

$L = \{ww^R \mid w \in (a+b+c)^*\}$

14. Ans: (d)

Sol: (a) 2^n state will suffice

(b) $\varphi^* = \varepsilon$

(c) The minimal DFA needs n + 1 states

15. Ans: (d)

Sol: All the hierarchy of languages in the Chomsky hierarchy are countably infinite. The set of all formal languages is not countably infinite.

16. Ans: (a)

Sol:

$\overset{1}{1}\ \underline{2}\ \underline{3}\ \overset{1}{4}\ \underline{5}\ \underline{6}\ \overset{1}{7}$

1 0 1 1 – 4 times

1 0 0 1 – 4 times

1 1 0 1 1 1 1 – 1 time

Total 9

17. Ans: (a)

Sol: (b) primes cannot be done by a FA

(a) Trace through the machine mod 5 machine needs 5 states

18. Ans: (b)

Sol: (a) Ruled out as ε is not generated

(c) Ruled out as b is not generated

(b) $H \rightarrow H\,a \mid a$

So $H \rightarrow a^+$ or aa^* &

$S \xrightarrow{*} H\,b$

$\xrightarrow{*} aa^*\,b$

So this is the answer

19. Ans: 7

Sol: mod 5 machine need 5 states. The initial 0 & the reject state gives 2 more. So a total of 7 states.

20. Ans: (a)

Sol: The language of palindromes is a standard CFL that is not regular. Every CFL is a CSL. Every CSL is a recursive set. Every recursive set is R.E.

21. Ans: (b)

Sol: The set is regular as it is the any complement of a regular set. It is infinite & satisfies the pumping lemma but this is not the reason for its regularity.

Scanned with CamScanner

22. Ans: (a)

Sol: The set is regular & its minimal DFA has 5 states.

23. Ans: (b)

Sol: The P case has a minimal DFA of 7 states. So P–6 is in the answer. The rest can be removed by elimination.

24. Ans: (d)

Sol: The language $L = \{a^p \mid p \text{ is prime}\}$ is a standard CSL that is not a CFL as can be shown by the pumping lemma for CFLs.

25. Ans: (a)

Sol: Evidently the m/c is a mod 3 counter. In x the output is 0. In z it is 1 & in y it is 2.

26. Ans: (c)

Sol: The language $L = \{ww\}$ is a CSL. Its complement is CFL & hence it is R.E.

27. Ans: (d)

Sol: The complement accepts ε. So (d) is a choice & (a) is ruled out, 00 is accepted by L_1 & L . So (b) is ruled out. ε ruled out (c) So answer is (d)

28. Ans: (a)

Sol: (b) is ruled out as 10 is not accepted. (c) is ruled out as 0^* is not accepted. (d) is ruled out as 0* is not accepted.

The first state needs 0^* in the answer. The second state needs 1^+. ε is there so the set accepted is $\varepsilon + 0^* + 1^+$

$= 0^* + 1^* = 0^* 1^*$

29. Ans: (a)

Sol: The grammar is right linear. So it generates a regular set. A regular set is accepted by a LBA. Anything accepted by a DFA or NFA is accepted by a DPDA.

Anything accepted by a DPDA is accepted by a PDA.

Anything accepted by a PDA is accepted by a FA.

30. Ans: (a)

Sol: $(aa)^*+a(aa)^*$ = odd number of a's + even number of a's = all a's = a^*.

Choice (a) is $(a+aa+aaa)^* = a^*$

Choice (b) does not contain a, choice (c) demands at least aa & does not contain a.

31. Ans: 1

Sol:

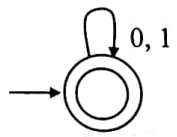

32. Ans: (d)

Sol:

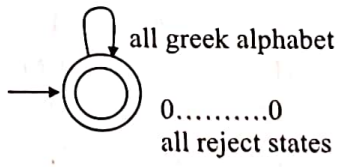

33. Ans: (a)

Sol: (d) has 00, (c) has 11, (b) has 00

By elimination the answer is (a)

34. Ans: (e)

Sol: A NFA which accepts strings where the 100th symbol from the right end is a 1 has 2^{100} states which is less than a googol.

Scanned with CamScanner

35. Ans: (b)

Sol: (a) & (d) are finite sets & hence regular

(c) is $L = \{a^i b^{i^4} / i \geq 1\}$ is a CFL that is not regular. (b) is a CSL that is not a CFL.

36. Ans: (d)

Sol: A palindrome is a string which is the same if we read left to right or right to left. The language of all palindromes $L = \{ww^R\}$ is a CSL.

37. Ans: (d)

Sol: L = {equal number of p, i, g, s}

$L \cap p^* i^* g^* s^*$

$= \{p^n i^n g^n s^n / n \geq 1\}$

is a standard CSL that is not a CFL. It needs an LBA to accept it.

38. Ans: (b)

Sol:

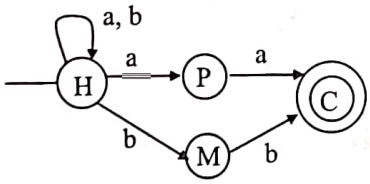

	a	b
→H	HP	HM
HP	*HPC	H
HM	H	*HMC
*HPC	*HPC	H
*HMC	H	*HMC

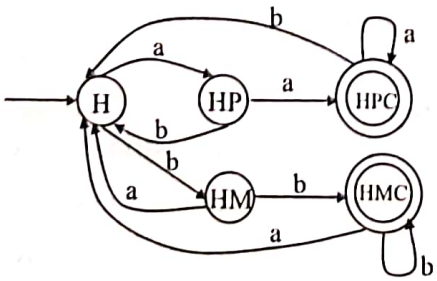

39. Ans: (c)

Sol: The minimal m/c in two states can accept any no. of a's & b's

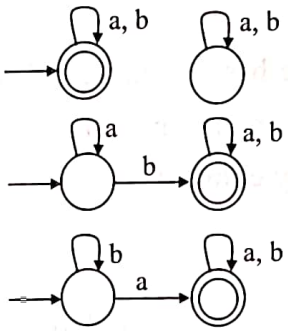

40. Ans: (d)

Sol: A CFL can be recognized in $O(n^3)$ time

41. Ans: (b)

Sol:

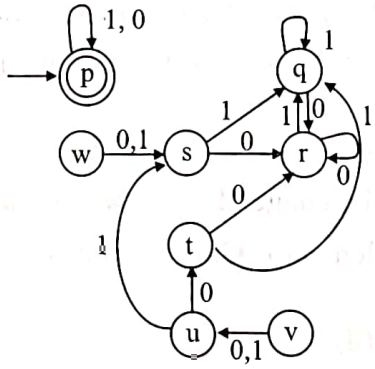

p is final & the rest are all non-final. All non-final states are equal. So 2 states.

42. Ans: 16

Sol: $(0+1)^* 11 (0+1)^*$ has two consecutive 1's

$(0+1)^* 00(0+1)^*$ has two consecutive 0's

$(0+1)^*11(0+1)^*+(0+1)^*00(0+1)^*$ has either a pair of consecutive 1's or a pair of consecutive 0's

$\overline{(0+1)^*11(0+1)^*+(0+1)^*00(0+1)^*}$ has neither a pair of consecutive 0's or a pair of consecutive 1's.

Scanned with CamScanner

43. Ans: (c)

Sol: (a) is $0(0+1)^*$
(b) is $(0+1)^*0$
(c) is $0(0+1)^*0$
(d) is $(0+1)^*$

44. Ans: 10

Sol:

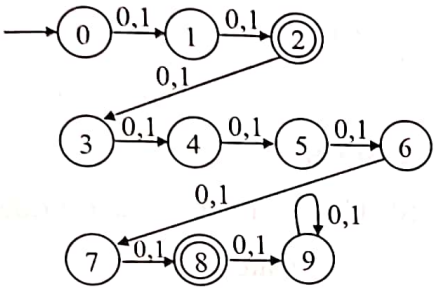

45. Ans: (b)

Sol: L_2 is a CFL that is non-regular

$L_1 \cup L_2 = L_1$ which is regular. So answer is (regular, non-regular)

46. Ans: (c)

Sol: We merely have to interchange the final & non–final states.

47. Ans: (d)

Sol: (a) L is a standard CSL that is neither a CFL nor regular

(b) L is a CFL that is not regular

(c) L is a CFL that is not regular

(d) A finite state transition diagram exists $mn \geq 10$ means $m \leq 10$ & $n \leq 10$ pairs only fits. We examine 100 pairs of these (m, n)

48. Ans: (b) & (c)

Sol: Both Moore & mealy machines are deterministic. Moore & mealy generates output and m/c models.

49. Ans: 360

Sol: $\underline{6}\ \underline{5}\ \underline{4}\ \underline{3}$

$6 \times 5 \times 4 \times 3 = 360$

50. Ans: (c)

Sol: If we take a Turing machine and remove its ink it becomes a finite automata.

51. Ans: (c)

Sol: Finite automata is allowed an infinite number of states can accept all & L in Σ^*.

52. Ans: (b)

Sol: $L_{1/2}$ & L_3 are regular. We simply have to make two strings for one or 3 steps for one step.

$L_{1/3\text{-}1/3}$ is not regular & this is a standard result.

53. Ans: (a)

Sol: A single b cannot be in the answer. So (b) & (c) are ruled out.

$a^*(ab^*)^* = a^*(a+\varepsilon+b+b^*)^* = (a+b)^*$
& $b^*(ab^*)^*b^* = b^*(a+\varepsilon+b+b^*)^* = (a+b)^*$

54. Ans: 0

Sol:

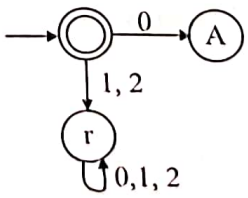

55. Ans: (a)

Sol:

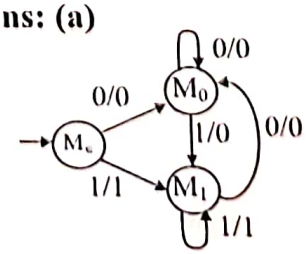

Scanned with CamScanner

56. Ans: (d)

Sol: L_1 & L_2 are not regular but CSLs. L_3 is regular. L_1 is not the same as L_2.

57. Ans: (b)

Sol: All of L_1 & L_2 are CSLs. L_3 is regular & hence a CSL. So L_1, L_2 & L_3 are CSLs. All are infinite.

58. Ans: (d)

Sol: The DFA is

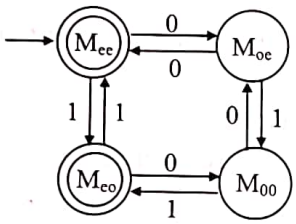

Obtain the regular expression from the above DFA using regular expression equations solve them.

59. Ans: (a)

Sol: With limited memory a finite automata cannot count.

60. Ans: (c)

Sol: (a) 001 does not go to a final state.

(b) 1010 does not go to a final state.

(c) The set of all strings must end with 011.

61. Ans: 0

Sol: ε is the empty string of length 0.

62. Ans: (a)

Sol: $a(ra)^* = \{a, ara, arara, \ldots\}$

$= \{a, ara, arara, \ldots\}$

$= (ar)^*a$

Both denote the same set.

63. Ans: (d)

Sol: (a) The intersection of two regular sets.

(b) The intersection of two regular sets.

(c) The intersection of regular sets.

(d) $L = \{0^n 1^{2n} 0^n / n \geq 1\}$ is a CSL & not a CFL.

64. Ans: (b)

Sol: (d) Can be rejected as 00 does not lead to a final state.

(a) Can be rejected as 001 does not lead to a final state.

(c) Can be rejected as 11 does not lead to a final state.

By elimination the answer is (b)

65. Ans: (b)

Sol: After 0, 1, 2, 3 symbols begin 0 a 1 is compulsory there.

66. Ans: 120

Sol: M_0 – 0's divisible by 2 – 2 states

M_1 – 1's divisible by 3 – 3 states

$M_\#$ – #'s divisible by 4 – 4 states

$M_\$$ – \$'s divisible by 5 – 5 states

$M_1 \times M_0 \times M_\# \times M_\$ = 120$ states

67. Ans: (c)

Sol: Though the language is a CSL its complement is a CFL.

Scanned with CamScanner

68. **Ans: (a)**

Sol: L_1 – regular

L_2 – regular

$L_3 - L_1\left(L_2^*\right)^R$ – regular

$L_4 - S(L_3)$ is regular

$L_5 - L4_{1/2}$ – regular

If L_1 & L_2 are φ then $L_1, L_2, L_3, L_4, L_5, L_6$ are to be empty. So finite & regular.

69. **Ans: (a)**

Sol: $L_6 - L4_{1/2}$ – regular

L_3 & L_6 are regular hence L_6 is R.E. & L_3 is a CSL.

70. **Ans: (b)**

Sol: Set $= (00)^+ + (111)^+ +$ other

So it is infinite. It can be expressed as a regular expression so it is regular.

71. **Ans: (b)**

Sol: The deterministic PDA is less powerful than the nondeterministic PDA. The case of LBA is not known.

72. **Ans: (b)**

Sol: $S \rightarrow (S) / ( ) / SS$ is the language of all well formed parenthesis. It is CFL.

73. **Ans: (a)**

Sol: P – 1: even no. of 0's + odd no. of 0's

$= (00)^* + 0(00)^*$

$= 0^*$

Q – 2: $(a + aa^* + aa^*a)^*$

$= a^* = (a^* + aaaaa^*)^*$

S – 4: $\varphi^*(a + b)^*$

$= \varepsilon(a + b)^* = (a + b)^*$ & $(a+aa+b^*+bb^*)^*$

$= (a + b)^*$

74. **Ans: (d)**

Sol: The language of all palindromes over a finite alphabet of size ≥ 2 is a CFL.

75. **Ans: (b)**

Sol: $(1+01)^*$ are strings not allowing two consecutive 0's.

$(0+01)^*$ are strings not allowing two consecutive 1's.

Scanned with CamScanner

Chapter 2 Context-Free Languages & Push-down Automata

01. The language accepted by a push down automaton where the stack is limited to 1000 states is best described as
(a) Context free
(b) Regular
(c) Deterministic context free
(d) Recursive

02. Consider the grammar with the following productions
S→aAb| bAc|aB,
S→AS|b,
S→Abb|ab,
BA→bdb|b
The above grammar is
(a) Context free
(b) Regular
(c) Context sensitive
(d) LR(k)

03. Which of the following CFG's can't be simulated by an FSM?
(a) S → Sa | a
(b) S → abX
X → cY
Y → d | aX
(c) S → aSb | abd
(d) None of the above

04. Consider the following languages
$L_1 = \{a^n b^n \mid n \geq 0\}$
$L_2 = \text{Complement}(L_1)$
Choose the appropriate option regarding the languages L_1 and L_2
(a) L_1 and L_2 are context free
(b) L_1 is context free but L_2 is regular
(c) L_1 is context free and L_2 is context sensitive
(d) None of the above

05. Consider the following context free grammars
1. S → aSbb | a
2. S → aSA | a
A → bB
B → b
Which of the following is ***correct***?
(a) The language generated by '1' is subset of '2'.
(b) The language generated by '2' is subset of '1'.
(c) The language generated by both the grammars '1' and '2'are equal.
(d) None of the above

06. Consider the following languages
$L_1 = \{a^m b^n c^p d^q \mid m+n = p+q\}$
$L_2 = \{a^m b^n c^p d^q \mid n=q \text{ or } m \leq p \text{ or } m+n = p+q\}$
$L_3 = \{a^m b^n c^p \mid m \neq n \text{ or } n \neq p \text{ or } m \neq p\}$

Which of the following statements is ***true***?

Scanned with CamScanner

(a) L_1 and L_3 are context free but not L_2
(b) L_1 and L_2 are context free but not L_2
(c) L_1, L_2 and L_3 are context free
(d) L_1 is context free but not L_2 and L_3

07. Which of the following languages define the CFG?
$S \rightarrow aSb, S \rightarrow A, A \rightarrow aA, A \rightarrow B,$
$B \rightarrow bA, B \rightarrow \varepsilon$
(a) $L = \{a^n b^n \mid n \geq 0\}$
(b) $L = \{a^k (a \cup b)^+ \mid k \geq 0\}$
(c) $L = \{(ab)^n a^* b^* \mid n > 0\}$
(d) $L = \{a^n (a^* b^*)^* b^n \mid n \geq 0\}$

08. Choose the CFL from the languages below
(a) $L=\{a^p \mid p$ is less than the 10000th prime$\}$
(b) $L=\{a^p \mid p$ is a prime and $p>100000^{th}$ prime$\}$
(c) $L=\{a^p \mid p$ is not a prime and $p>10000^{th}$ prime$\}$
(d) $L=\{wwwwwww^R \mid w$ in $a(a+b)^*\}$

09. The language generated by the grammar $S \rightarrow aS|bS|a|b$ is accepted by a
A. 2DFA B. DPDA
C. PDA D. LBA
(a) D > C > B > A (b) A > B > C > D
(c) B > C > D > A (d) D > A > B > C

10. The complement of the language L containing an equal number of a's, b's and c's is
(a) regular
(b) context free
(c) context sensitive but not context free
(d) recursive and not a CFL.

11. Consider the CFG G given below:
G: $A \rightarrow aAb|ab$
$B \rightarrow b|bB$
$C \rightarrow AB$
G generates a language which has
(a) a's equal to b's
(b) b's never greater than a's
(c) a's never less than b's
(d) all strings with an unequal number of a's and b's

12. Choose the ***true*** statement.
(a) The regular sets and CFLs are closed under intersection.
(b) The regular sets and CFLs are preserved under the operation of complement.
(c) The regular sets are closed under intersection but the CFLs are not.
(d) The CFLs are closed under complement but the regular sets are not.

Common Data for Q 13, 14 & 15 is given below

Ram takes two context-free languages L_1 and L_2.
a. He concatenates L_1 and L_2 to obtain a new set L_3.
b. He takes the complement of L_3 to obtain a set L_4.
c. He forms a new language L_5 by taking the first half of each string in L_4.
d. He obtains a new language L_6 by taking the second half of each string in L_4.
e. He concatenates L_5 and L_6 to obtain a new language L_7.
f. He takes the intersection of L_7 and L_1 to obtain a new language L_8.

Scanned with CamScanner

13. The language L_5 is
    (a) Finite
    (b) CFL but not regular
    (c) R.E. but not recursive
    (d) Recursive set

14. The language L_7 is
    (a) CFL but not regular
    (b) CSL
    (c) Recursive but not a CSL
    (d) R.E. set that is not recursive

15. The language L_8 is
    (a) Recursive
    (b) CSL that is not finite
    (c) CFL that may be regular
    (d) R.E. set that is never finite

16. The language set of all strings not of the form $wwww^Rwww$, w in (a+b+c)* is accepted by a
    (a) PDA
    (b) NFA
    (c) Deterministic turing machine
    (d) 2DFA

17. The language of primes in base 1000000000000000000000000000000000 is
    (a) Regular
    (b) CFL but not DCFL
    (c) R.E but not recursive
    (d) Context sensitive

18. Match the following:

Language

P. $\{aa+aaa+aaabcd\}^*a$

Q. Complement of strings of the form ww, w in $(a+b)^*$

R. $\{wcccccccc w^R | w \text{ in } (a+b)^*\}$

S. $\{wwwwwww | w \text{ in } (a+b+c+d+e)^*\}$

Automata accepting the same

1. DFA
2. PDA but not a FA
3. PDA or a DPDA
4. LBA but not a PDA
5. Halting turing machine but not a LBA
6. Turing machine and not a halting turing machine

Codes:

(a) P–1, Q–2, R–3, S–4
(b) P–6, Q–4, R–3, S–5
(c) P–1, Q–3, R–6, S–2
(d) P–1, Q–2, R–3, S–6

19. Choose the CFL from the languages below
    (a) $L = \{ww^Rw | w \text{ in } (a+b+c)^*\}$
    (b) L = complement of the set of all balanced parentheses over {(,),[,],<,>,{,}}
    (c) $L = \{a^i b^j c^k d^k e^l \mid i<j<k<l\}$
    (d) The set of all well formed regular expressions union the set of all strings with an equal number of a's, b's and c's.

20. Ashok form the language of all palindromes over a single alphabet removes all strings which are prime in length the resulting language can be accepted by a

Scanned with CamScanner

(a) PDA (b) 2NFA
(c) 2DFA (d) multithreaded turing machine

21. Context free languages over a single alphabet are always
(a) DCFLs
(b) DCFLs but not regular sets
(c) Never regular (d) Regular

22. Let $L_1 = \{a^{n+m} b^n c^m \mid n, m > 0\}$,
$L_2 = \{a^{n+m} b^{n+m} c^m \mid n, m > 0\}$ and
$L_3 = \{a^{n+m} b^{n+m} c^{n+m} \mid n, m > 0\}$
Which of these languages are NOT context free?
(a) L_1, L_2 only (b) L_1, L_3 only
(c) L_2, L_3 only (d) L_3 only

23. **Assertion (a):** $L = \{a^n b^n c^n \mid n>0\}$ is non CFL.
Reason (r): L contain infinite number of equivalence classes.

Choose:
(a) Both (a) & (r) are true and (r) is the correct explanation for (a).
(b) Both (a) & (r) are true and (r) is not the correct explanation for (a).
(c) (a) is true and (r) is false.
(d) (a) and (r) are false.

24. The language $\{0^i 2\, 1^n \mid i < n < 1061\}$ is
(a) Regular
(b) Context free but not regular
(c) Context free but its complement is not context free
(d) Not context free

25. $L_1 = 0^*1^*0^*$ and $L_2 = \{0^n 1 0^n \mid n>0\}$ then $L_1 \cap L_2$ and L_2 are
(a) Regular, CFL
(b) CFL, Regular
(c) Regular, Regular
(d) CFL, CFL

26. If the language L is recognized by an FA, then the language FRONT (L) = {s | s is the prefix of t, here $t \in L$} is a
(a) Regular language
(b) Context-free language
(c) Context - sensitive language
(d) All of these

27. State which of the following statements is ***true***?
(a) If $L(G_1)$ and $L(G_2)$ are equivalent, even then it is not necessary that they are of same type.
(b) A context free language is also a regular language.
(c) A context sensitive language is also a context free language.
(d) None of the above.

28. Consider the following languages:
i. The set of all strings with an equal number of a's and b's
ii. The set of all strings with an unequal number of a's and b's
iii. The set of all strings with an equal number of a's, b's and c's

Scanned with CamScanner

Choose the correct statement

(a) All are regular and context free
(b) All are context free and context sensitive
(c) Only the first two are context free and the last one is context sensitive
(d) All are context sensitive

29. Match the following:

List – I

(A) two counter machines
(B) 67 pebble machines
(C) 100000 push down tape machines
(D) 999 counter machines

List – II

1. R.E. sets
2. PDA
3. LBA
4. DPDA

Codes:

	A	B	C	D
(a)	1	2	3	4
(b)	1	1	1	1
(c)	1	3	4	2

(d) None

30. Match the following:

List – I

(P) {wwwwwwww| w in $(a+b)^*$}
(Q) {uvwxy$uvwxy| u,v,w,x,y in $(a+b)^*$}
(R) {uvwxy$$$yxwvu| u,v,w,x,y in $(a+b)^*$}
(S) equal number of a's, bb's, ccc's

List – II

1. CFLs
2. CSLs
3. DCFL
4. R.E

Codes:

	P	Q	R	S
(a)	2	3	4	1
(b)	2	2	1	2
(c)	3	2	4	1

(d) None

31. The language $\{w \# w^R \mid w \in (a+b)^*\}$ is

(a) a regular set
(b) a DCFL
(c) a CFL
(d) a R.E. set

32. The language $\{a^n \mid n > 10^{10} \ \& \ n \neq 10^{100}\}$ is

(a) a regular set
(b) a DCFL
(c) a CFL
(d) a CSL

33. Choose the context free languages in the following:

(a) The set of all palindromes over {0,1} where the 100th symbol from the right end is a 1.
(b) The set of all palindromes over {0, 1, 2, 3, 4} where every pair of consecutive 1's occurs before any pair of consecutive 0's.
(c) The set of all palindromes over {0, 1, 2, 3, 4, 5} that interpreted as a base 6 number are congruent to 4 modulo 5.
(d) The set of all palindromes over {0, 1} that interpreted as a binary number are congruent to 5 modulo 7 and where the third symbol from the right end is a 1.
(e) All of the above

Scanned with CamScanner

34. Choose the context free languages that are not regular:

(a) The set of all strings over {a, b, c} that do not have an equal number of a' s, b's and c's.

(b) The set of all strings over {a, b, c, d,…,z} that are not of the form ww but whose third symbol from the right end is a 'r'

(c) The set of all strings over {a, b, c} where either the a's are 10 times the number of b's or the b's are ten times the number of c's and where every string in the language has every pair of two consecutive a's occur before any pair of consecutive b's.

(d) All of the above

35. Consider the following PDA with empty stack

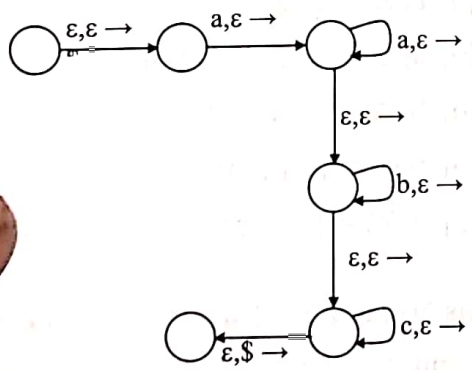

(In the above PDA a,b → c means on the input symbol 'a' either pop 'b' or push 'c'). What is the language accepted by the above PDA?

(a) $L = \{a^m b^n c^n \mid m \geq 0, n \geq 0\}$

(b) $L = \{a^m b^m c^n \mid m \geq 0, n \geq 1\}$

(c) $L = \{a^n b^m c^n \mid m \geq 1, n \geq 0\}$

(d) $L = \{a^n b^n c^m \mid m \geq 0, n \geq 0\}$

36. The non-deterministic and deterministic models of the following automata have different accepting capabilities.

(a) The Turing machines.

(b) The push down automata.

(c) The two way finite automata.

(d) The halting Turing machines.

37. Consider a push down automata which has an auxiliary memory of upto 4 stacks.

List – I

P. The stack are restricted to size 100 symbols.

Q. The stacks except for one of them are all of finite capacity and the machine is deterministic.

R. The machine is nondeterministic and has one of the stacks of infinite capacity.

S. The machine has two stacks of infinite capacity.

List – II

1. The language accepted is a regular set that may not be finite.
2. The machine accepts a DCFL may not be regular.
3. The machine accepts a CFL that may not be a DCFL.
4. The machine accepts a R.E. set that may not be recursive.
5. The machine accepts a finite set.
6. The machine accepts the empty set only

Scanned with CamScanner

Codes:

(a) P–1, Q–2, R–3, S–4

(b) P–2, Q–5, R–6, S–3

(c) P–3, Q–3, R–2, S–3

(d) P–4, Q–3, R–6, S–1

38. The language L is the set of all strings over {0, 1} that are of the form $ww^R0*1*0*$. Ganguly makes the following statements about L.

Choose the ***true*** statement?

(a) L is regular

(b) L is a CFL

(c) L is a CSL but not CFL

(d) L is R.E. but not CSL

39. If a PDA is restricted to using a stack which cannot grow more than 100000000 symbols the languages accepted by such PDA are

(a) all CFLs (b) all DCFLs

(c) Some regular sets (d) All finite sets

40. I have two languages L_1 & L_2 and two friends Madhumathi and Deepika.

L_1 & L_2 are defined as follows:

L_1 = set of all strings over the alphabets a, b and c including ε.

L_2 = set of all strings over the alphabets a, b and c, where n number of a's followed by n number of b's and followed by any number of c's.

I gave L_1 to Deepika with the rename L_3 and L_2 to Madhumathi with the rename L_4. They performed following operations between L_3 and L_4:

$L_5 = L_3 . L_4$ $L_6 = L_3 \cup L_4$

$L_7 = L_3 \cap L_4$ $L_8 = L_7^1$

$L_9 = L_2 \cup L_8$ $L_{10} = L_9^1$

Then L_{10} is

(a) Regular (b) CFL

(c) CSL (d) R.E. sets

41. Which of the following is a CFL?

(a) $L = \{a^{n^2} \mid n \geq 0\}$

(b) $L = \{a^P \mid P \text{ is Prime}\}$

(c) $L = \{a^P \mid P^{100} < \text{finite number}\}$

(d) None

42. Consider the PDA

$\{(q_0, q_1, q_2), (a, b), (Z, S, A, B), \delta, q_0, Z, q_2\}$

1. $\delta(q_0, \varepsilon, Z) = \{(q_0, SZ)\}$
2. $\delta(q_1, a, S) = \{(q_1, SA)\ (q_1, \varepsilon)\}$
3. $\delta(q_1, b, A) = \{(q_1, B)\}$
4. $\delta(q_1, b, B) = \{(q_1, \varepsilon)\}$
5. $\delta(q_1, \varepsilon, Z) = \{(q_2, \varepsilon)\}$

In this $\delta(p, a, X) = \{(q, y)\}$ means in state 'p' on input 'a' replace X with y (y can be a string of variables) except in statement '1' in which 'S' is placed on Z.

The language accepted by this PDA is

(a) $\{a^n b^{2n} \mid n \geq 0\}$

(b) $\{a^n b^{2n+1} \mid n \geq 0\}$

(c) $\{a^{n+1} b^{2n} \mid n \geq 0\}$

(d) None

Scanned with CamScanner

43. The intersection of two CFS
(a) is always a CFL (b) may be a CFL
(c) is never a CFL (d) is always a CSL

44. The following language defined over
$\Sigma = \{a, b\}$
$L = \{a^n b^m a^k : n \geq m \geq k\}$ $k = a^* b^*$
Choose ***incorrect*** statements from the options given below.
(a) The smallest class of languages which contain $L \cap K$ is CFL
(b) The smallest class of languages which contain $\overline{L} \cap K$ is CFL
(c) The smallest class of languages which contain L is CFL
(d) None of the above

45. The context free grammar corresponding to the language
$L = \{a^m b^n \mid m \geq n \geq 0\}$ is
$S \rightarrow ASB, S \rightarrow \varepsilon$
$A \rightarrow (1) \mid (2)$
$B \rightarrow b, \quad B \rightarrow \varepsilon$
Statements (1) and (2) can be
(a) $A \rightarrow Aaa \mid a$ (b) $A \rightarrow Aa \mid aa$
(c) $A \rightarrow Aa \mid a$ (d) All of the above

46. What type of grammar is this most accurately described as?
$S \rightarrow b \mid aD; \quad D \rightarrow a \mid aDD$
(a) A regular grammar
(b) A context free grammar
(c) A context sensitive grammar
(d) A phrase (type-0) grammar.

47. The class of regular sets and CFLs are closed under (choose the true statement)
(a) Intersection (b) Complement
(c) Union (d) Inverse substitution

48. Pumping lemma for regular sets. Choose the non-regular set?
(a) $L = \{ww \mid w \text{ in } (0+1)^* \text{ and } |w| < 1000000\}$
(b) $L = \{a^n b^n c^n \mid n>=1 \text{ and } n< 10^{20}\text{lakh}\}$
(c) $L = \{ww^R \mid w \text{ in } (0+1)^+ \text{ and } |w|<10^{30}\text{lakh}\}$
(d) $L = \{a^i b^j \mid gcd(i, j)=1\}$

49. The language generated by the grammar
$S \rightarrow SS|aSb|ab$ is accepted by a
A. DPDA B. PDA
C. LBA D. Turing machine
(a) D > C > B > A (b) A > B > C > D
(c) B > D > A > B (d) D > A > B > C

Common Data for Q50 & Q51 is given below

Consider the transition graph of a PDA M. s is the contents of the push down store. An edge $\delta(q_0, a, X.s) = (q_1, YX.s)$ means the PDA in state q_0 with a in the input and X as the top stack symbol goes to state q_1 and stacks a y. $\delta(q_0, a, Y.s) = (q_1, s)$ means PDA in state q_0, with a as the input and Y as top stack symbol, pops the y and goes to state q_1.

Consider the incomplete transition graph of a PDA shown below

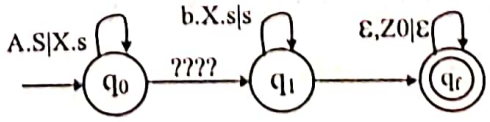

Scanned with CamScanner

Z_0 is the bottom stack marker and {a, b} is the input vocabulary.

50. The missing edge to accept the language $\{a^n b^n \mid n>=1\}$ is
(a) $\delta(q_0,b,X.s)=(q_1,s)$ (b) $\delta(q_0,a,X.s)=(q_1,s)$
(c) $\delta(q_0,a,s)=(q_1,X.s)$ (d) $\delta(q_0,b,s)=(q_1,X.s)$

51. The missing edge to accept the language $\{a^n b^n \mid n>=0\}$ is
(a) $\delta(q_0, \varepsilon,s)=(q_f,s)$ (b) $\delta(q_0,a,X.s)=(q_1,s)$
(c) $\delta(q_0,a,s)=(q_1,X.s)$ (d) $\delta(q_0,b,s)=(q_1,X.s)$

52. The complement of a CFL
(a) is never a CFL
(b) may not be a CFL
(c) is a CSL and never a CFL
(d) never regular

53. Choose the CFL from the languages below:
(a) L = {a ^ n ** 2 | n > 10000}
(b) L = {a ^ 2 ** n | n > 10000}
(c) L = {a ^ n! | n > 100000}
(d) Complement of L = $\{a^n b^n c^n \mid n>1000\}$

Common Data for Q54 & Q55 is given below.

Consider the following CFG:

S→AACD, A → aAb/ε, C→Ac / a,D → aDa/bDb/ε

54. For the above CFG simplified CFG is
(a) S → AACD/ACD/AAC/CD/AC/XC/a,
A → XAY / XY, C → XC / a,
D → XDX / YDY / XX / YY,
X → a, Y → b;
(b) S → AACD / ACD / AAC / CD
A → XAY / XY, C → XC / a,
D → XDX / YDY / XX / YY,
X → a, Y → b;
(c) S → AACD / ACD / AAC / CD / AC
A → XAY / XY, C → XC / a,
D → XDX / YDY / XX / YY,
X → a, Y → b;
(d) S → AACD /ACD / AAC / CD / AC / XC
A → XAY / XY, C → XC / a,
D → XDX / YDY / XX / YY,
X → a, Y → b;

55. CNF grammar for the given CFG is
(a) S → AE/AF/AG/CD/XC/a,
E → AF, F→CD, G→AC
A → XH/XY, H→AY, C→XC/a,
D → XI/YJ/ XX/YY, I→DX, J→DY
X → a, Y → b;
(b) S → AE/AF/AG/CD/AC/XC/ a,
E → AF, F→CD, G→AC
A → XH/XY, H → AY, C → XC/a,
D → XI/YJ / XX/YY, I → DX, J → DY
X → a, Y → b;
(c) S → AE/AF/CD/AC/XC/a,
E → AF, F → CD, G → AC
A → XH / XY, H → AY, C → XC / a,
D → XI/YJ/XX/ YY, I → DX, J → DY
(d) S → AF / AG / CD / AC / XC / a,
E → AF, F → CD, G → AC
A → XH/XY, H → AY, C → XC / a,
D → XI/YJ / XX / YY, I → DX, J→ DY
X → a, Y → b;

Scanned with CamScanner

56. If a given CFL is infinite with P productions in CNF, then there will be atleast one string of the following length derivable from the CFG.
(a) $<2^{p+1}$ and $>2^{p+2}$
(b) $>2^{p+1}$ and $<2^{p+2}$
(c) $>2^{p+1}$ and $>2^{p+2}$
(d) $<2^{p+1}$ and $<2^{p+2}$

57. Which of the following statements is ***true***?
(a) $L = \{a^n b^n / n \geq 1\} \cup \{a^m b^{2m} / m \geq 1\}$ can be accepted by a deterministic PDA.
(b) The regular set accepted by a DFA with n states is accepted to final state by a deterministic PDA with n states and one push down symbol.
(c) The language $L = \{a^n b^n c^n / n \geq 1\}$ can be accepted by a deterministic PDA.
(d) All of the above

58. Choose the ***correct*** statement(s)
(a) Non deterministic two push down tape machines can simulate all finite length C programs
(b) Non deterministic 89 counter machines can simulate all finite length C programs
(c) Non deterministic 89 tape turing machines can simulate a pushdown tape machine
(d) All of the above

59. Match the following

List–I
(A) Context free languages
(B) Regular sets
(C) Context sensitive languages
(D) Extended regular expressions

List–II
1. 2DFA
2. DPDA
3. 77 pebble machines
4. PDA

Codes:

	A	B	C	D
(a)	4	2	2	1
(b)	4	2	3	1
(c)	4	3	2	1

(d) None

60. Match the following:

List–I
(A) Context free languages
(B) Regular sets
(C) Context sensitive languages
(D) Recursive sets

List–II
1. Set of all strings not containing 00001 as a substring.
2. Set of all strings with ten times the number of a's as b's.
3. Set of all strings with a's ten times the number of b's and twenty times the number of c's and thirty times the number of d's.
4. Set of all extended regular expressions that are empty.

Codes:

	A	B	C	D
(a)	3	2	4	1
(b)	2	1	3	4
(c)	3	2	1	4

(d) None

Scanned with CamScanner

61. Geeta constructs a language L over {a, b, c, d, e} containing an equal number of a's, b's, c's, d's and e's. The complement of L is
(a) A finite set (b) A context free language
(c) A regular set (d) Empty set

62. L is the complement of the language P which contains all strings of the form ww over the alphabet {a, b, c, d}, where w is a string in $\{a, b, c\}^*$. Mohan decides that L is
(a) CFL
(b) CSL but not CFL
(c) Recursive but not CSL
(d) R.E. but not CFL

63. Which of the following statements is ***true***?
(a) If a language satisfies the pumping lemma for regular sets it is necessarily a regular set.
(b) If a language satisfies the pumping lemma for CFLs it is necessarily a CFL.
(c) If a language does not satisfy the pumping lemma for regular sets it is necessarily a CFL.
(d) None of the above.

64. Which of the following languages can be accepted by DPDA?
(a) Strings ending with a particular alphabet.
(b) $\{w \subset w^R \mid w \in \{a, b\}^*\}$
(c) $\{a^n b^n \mid n \geq 1\}$
(d) All of the above

65. Consider the set of integers $\{N \mid N = 5^{**}k+1$ and described as a base 2 number over the alphabet $(0 + 1)^*\}$
(a) The set is neither a regular set nor a context free language
(b) The set is context free but not regular
(c) The set may be context free
(d) None

66. Choose the CFL from the languages below
(a) $L = \{ a^n \mid n > 10000^{google}\}$
(b) $L = \{a^n \mid n > google\}$
(c) $L = \{ a^{n!} \mid n > 100000^{google}\}$
(d) complement of
$L=\{a^n b^n c^n d^n e^n f^n \mid n>1000000000000000000000000000000000000000000000000000\}$

67. Choose the ***correct*** statement.
(a) The language of primes in unary is a regular set
(b) The set $L = \{a^{n!} \mid n \geq 1\}$ is a regular set
(c) The set $L = \{a^{n^{100}} \mid n \geq 1\}$ is not a CFL
(d) The set $\{a^n b^n c^n \mid n \geq 1000\}$ is regular

68. Which of the following statement is not true?
(a) DFA is equivalent in power to regular expression.
(b) The PDA is equivalent in power to CFL.
(c) The DFA and NFA are equivalent in power.
(d) The DPDA and NPDA are equivalent in power.

Scanned with CamScanner

69. Choose the DCFL from below
(a) $L=\{a^n b^n c^n | n>1000\}$
(b) L=Set of all balanced parenthesis
(c) $L=\{ww^R | w \text{ in } \{a, b\}^*\}$
(d) $L=\{ww | w \text{ in } \{a, b\}^*\}$

70. A context free grammar is ambiguous if
(a) The grammar contains useless non-terminals
(b) The grammar has an ε-production
(c) It produces more than one parse tree for some sentence
(d) It produces more than one parse tree for all sentences
(e) Some production has two or more non-terminals side by side

71. The set of all strings over {0,1} where the 1's are either equal to the 0's or twice as many is
(a) a context free language but not a DCFL
(b) a DCFL but not regular
(c) a CSL but not a CFL
(d) none of the above

72. Choose the ***correct*** statement.
(a) The DCFLs can accept all the palindromes over {a, b}.
(b) Every CFL can be accepted by some deterministic push down automata.
(c) Every CFL is accepted by some halting turing machine where the head does not leave the input.
(d) Every CSL can be accepted by some finite automata with a very large number of states.

73. Choose the correct statement
(a) The language of palindromes is sometimes regular but always context free
(b) The language of palindromes is sometimes regular but always context sensitive
(c) No palindrome language can be regular but is always context free
(d) No palindrome language can be context sensitive but is always context free.

74. Which of the following statement is ***true***?
(a) The nondeterministic and deterministic models of pda are equivalent.
(b) The 2 pda has the same power as a pda
(c) The deterministic and non-deterministic finite automata are equivalent in power
(d) None of these

Scanned with CamScanner

Solutions

01. Ans: (b)

Sol: A limited stack can always be stored in the finite control of a DFA.

02. Ans: (c)

Sol: The rule BA → bdb/b makes the grammar CSG.

03. Ans: (c)

Sol: (a) is regular set $S \xrightarrow{*} a^+$

(b) is regular as the grammar is right linear

(c) is a CFL that is not regular.

$S \xrightarrow{*} a^n S b^n$

$\xrightarrow{*} a^{n+1} b\, db^{n+1}$

04. Ans: (a)

Sol: (a) L_1 is a standard CFL

(b) L_2 is standard CFL

05. Ans: (c)

Sol: 1. $S \xrightarrow{*} \{a^{n+1} (bb)^n \mid n \geq 1\}$

2. $S \xrightarrow{*} a^n S A^n$

$\xrightarrow{*} a^{n+1} A^n$

$A \xrightarrow{*} bb$

So both languages are the same

06. Ans: (c)

Sol: (a) L_1 is a CFL of the form

$L = \{ x^n y^n \mid n \geq 1\}$

(b) L_2 is the union of two CFLs of the form

$L = \{x^n y^n \mid n \geq 1\}$ & $L = \{x^m y^l \mid m \leq l\}$

(c) L_3 is a standard CFL

07. Ans: (d)

Sol: $S \xrightarrow{*} a^n S b^n$

$\xrightarrow{*} a^n A b^n$

$A \xrightarrow{*} a^m A$

$\xrightarrow{*} a^m B$

$B \xrightarrow{*} b^l A$

So in the beginning & end we must have $a^n \ldots b^n$

08. Ans: (a)

Sol: (b), (c) & (d) are CSLs that are not CFL. (a) is a regular set & hence a CFL.

09. Ans: (a)

Sol: The grammar is a right linear grammar. So a 1DFA or 2DFA can accept it.

10. Ans: (b)

Sol: $L = \{a^n b^n c^n \mid n \geq 1\}$ is a CSL but its complement is a CFL.

So L = {equal number of a's, b's, c's} is a CSL but its complement is a CFL.

11. Ans: (a)

Sol: The rules B→b | bB & C→AB can be eliminated as useless.

12. Ans: (c)

Sol: The class of CFLs are not closed under intersection or complement.

Scanned with CamScanner

13. **Ans: (d)**

Sol: L_1 – CFL, L_2 – CFL

$L_3 = L_1 . L_2 = CFL$

$L_4 = \overline{L}_3 = CSL = \text{recursive set}$

$L_5 = \frac{1}{2} L_4$ is recursive

14. **Ans: (b)**

Sol: L_6 = recursive set = CFL

$L_7 = L_5 . L_6 = CSL = \text{recursive set}$

15. **Ans: (a)**

Sol: $L_8 = L_7 \cap L_1$ = recursive set (or) CSL

16. **Ans: (c)**

Sol: The language is a CSL and its complement is a CFL & is accepted by a turing machine.

17. **Ans: (d)**

Sol: The language of primes is recursively a CSL that is not a CFL.

18. **Ans: (a)**

Sol: P is a regular set

Q is a CFL

R is a CFL.

S is a CFL.

19. **Ans: (b)**

Sol: (a) is a CSL not CFL

(b) is a CFL where complement is a CFL

(c) is a CSL not CFL

(d) equal no. of a's, b's, c's makes the language as CSL.

20. **Ans: (d)**

Sol: The language $L = \{a^p \mid p \text{ is not prime}\}$ is a standard CSL that is not a CFL.

21. **Ans: (d)**

Sol: CFLs are a single alphabet are regular– standard theorem

22. **Ans: (c)**

Sol: L_1 is a standard CFL

L_2 is a standard CSL

L_3 is a standard CSL.

23. **Ans: (b)**

Sol: L is a CSL that is not a CFL & is not regular.

24. **Ans: (a)**

Sol: The language is finite & hence regular.

25. **Ans: (d)**

Sol: L_1 is a regular set & L_2 is a CFL. $L_1 \cap L_2$ is a CFL that is not regular.

26. **Ans: (a)**

Sol: The regular sets are closed under the prefix property.

27. **Ans: (d)**

Sol: All are FALSE statements. The CFLs are a proper subset of the CSLs. The regular sets are a proper subset of the CFLs. The equivalence of $L(G_1)$ & $L(G_2)$ means the same type.

28. **Ans: (c)**

Sol: (i) & (ii) are CFLs & (iii) is a CSL.

Scanned with CamScanner

29. Ans: (b)

Sol: A – two counter machines as TMs – (1)

B – 67 pebble machines as TMs – (1)

C – 100000 pushdown tape m/c as TMs –(1)

D – 999 counter machines – (1)

30. Ans: (b)

Sol: (P) is a CSL - (2)

(Q) is the language of the form {ww} so it is CSL - (2)

(R) is the palindrome language so (1)

(S) is a CSL so (2)

31. Ans: (b)

Sol: The language of palindromes with # in the center is a DCFL.

32. Ans: (a)

Sol: A state diagram of a FA, or a regular expression (though large) can be constructed for the set.

33. Ans: (e)

Sol: The palindrome languages is a CFL. Here in all cases we are intersections it with regular sets.

34. Ans: (d)

Sol: (a) is a CSL that is not a CFL

(b) is a CFL $\cap$ regular set

(c) is a CFL $\cap$ regular set

The CFLs are closed under intersection with a regular set.

35. Ans: (a)

Sol: The a's are ignored. The b's & c's must be equal.

36. Ans: (b)

Sol: The FA, DFA, 2DFA accept regular sets and the NFA, 2NFA accept regular sets.

Both deterministic & non-deterministic TMs accept the R.E. sets

Both deterministic & non-deterministic halting TMs accept the recursive sets.

37. Ans: (a)

Sol: P–1: 'A restricted stack makes it a finite automata.

By the method of elimination the other choices can be ignored.

38. Ans: (b)

Sol: $L \cap 1(0+1)^*1$ gives only palindromes. So it is a CFL

39. Ans: (d)

Sol: A limited stack accepts all finite sets & all regular sets. The limited stack contents can be stored in the finite control.

40. Ans: (b)

Sol: $L_1 = (a+b+c)^* = L_3$

$L_2 = \{a^n b^n c^i \mid i, n \geq 0\} = L_4$

$L_5 = L_3.L_4 \rightarrow$ CFL

$L_6 = L_3 \cup L_4 \rightarrow$ CFL

$L_7 = L_3 \cap L_4 \rightarrow$ CFL

$L_8 = L_9^1 \rightarrow$ CFL

$L_9 = L_2 \cup L_5 \rightarrow$ CFL

$L_{10} = L_9^1 \rightarrow$ CFL

Scanned with CamScanner

41. **Ans: (c)**

Sol: The squares & primes in unary are CFL (c) is a finite set & hence a CFL.

42. **Ans: (c)**

Sol: (1) By move (1) a S is placed on the stack

(2) Every a coming in a A is stacked

(4) For every b in input a B is stacked

(5) This B is removed by another B

(6) Accepting is by empty stack & final state q_2.

So $L = \{a^{n+1}(bb)^n \mid n \geq 0\}$

43. **Ans: (b) & (d)**

Sol: 1) $a^* \cap b^* = \varphi$ a CFL

2) The CFLs are not closed under intersection.

44. **Ans: (c)**

Sol: L is a CFL by the pumping lemma.

45. **Ans: (c)**

Sol: We must have any number of a's

(c) $A \xrightarrow{*} a^+$

46. **Ans: (b)**

Sol: Standard definition of a CFG.

47. **Ans: (c)**

Sol: CFLs are not closed under complement, intersection or inverse substitution. The regular sets are closed under inverse regular substitution.

48. **Ans: (d)**

Sol: The sets (a), (b) & (c) are finite & hence regular

49. **Ans: (a)**

Sol: TM ≥ LBA ≥ PDA ≥ DPDA

This is the language of balanced parenthesis

50. **Ans: (a)**

Sol: A first b in the input must make a transition to state q_1 a pop state

51. **Ans: (a)**

Sol: Some acceptance is by a final state q_f, when the input is exhausted we must go to q_f.

52. **Ans: (b)**

Sol: The class of CFL are not closed under complement.

53. **Ans: (d)**

Sol: (a), (b) & (c) are CSLs. (d) is a CSL but its complement is a CFL.

54. **Ans: (a)**

Sol: Consider rewriting the production

$A \to \varepsilon$ & $D \to \varepsilon$

55. **Ans: (b)**

Sol: 1) In (a) $S \to AC$ is missing

2) In (d) $S \to AE$ is missing

3) In (c) terminal strings are not generated

So by elimination the answer is (b)

56. **Ans: (b)**

Sol: Follows from the construction of the pumping lemma.

Scanned with CamScanner

57. Ans: (b)

Sol: (c) is FALSE as the language is a CSL that is not a CFL.

(b) is true as every regular set is a DCFL. We can ignore the stack of the DPDA.

(c) is FALSE as the DPDA cannot decide the number of b's to recognize.

58. Ans: (d)

Sol: Two pushdown tape machines, 89 counter machines (deterministic or non-deterministic) can simulate a TM. A TM can simulates a C program of finite length.

59. Ans: (b)

Sol: CFLs (A) – (4) PDA

Regular sets (B) – (2) DPDA

CSLs (C) – (3) pebble machines

extended regular expressions (D)–(1) 2DFA

60. Ans: (b)

Sol: (B) regular set – (1) – regular

(A) CFLs – (2) – CFL

(C) CSL – (3) – CSL

(D) recursive – (4) – recursive

61. Ans: (b)

Sol: The set L is a CSL. It's complement is a CFL.

62. Ans: (a)

Sol: L is a CSL & complement is however a CFL.

63. Ans: (d)

Sol: Satisfying a pumping lemma proves nothing. Not satisfying the pumping lemma for a regular sets is the CSL $\{a^{n^2} \mid n \geq 1\}$

64. Ans: (d)

Sol: (a) $L = \Sigma^*(a, b, \ldots, z)$ is regular so DCFL so accepted by DPDA.

(b) Palindromes with center known

$S \rightarrow aSa \mid bSb \mid \varepsilon$

So it is DCFL accepted by DPDA.

(c) DCFL – A DPDA reads the string left to right, a's are pushed into stack. Each b is pop on a. At end if stack is empty. It is accepted by DCFL.

65. Ans: (a)

Sol: $L = \{a^n \mid n = 5^k + 1\}$ is a CFL. So it is a CFL in base 2 also.

66. Ans: (d)

Sol: (d) is a CFL that is not regular

(a), (b) & (c) are regular sets & CFLs.

67. Ans: (c)

Sol: This set is a CSL by the pumping lemma for CFLs.

68. Ans: (d)

Sol: The deterministic & non–deterministic PDA are not equivalent.

69. Ans: (b)

Sol: (a) is a CSL, (c) is a CFL that is not a DCFL, (d) is a standard CSL. Parenthesis matching is a DCFL.

Scanned with CamScanner

70. **Ans: (c)**

Sol: A CFG is said to be ambiguous it in the language generated there is some string that has more than one derivation tree/syntax tree

71. **Ans: (b)**

Sol: $L = \{0^n 1^n\} \cup \{0^{2n} 1^n\}$ is a DCFL

72. **Ans: (c)**

Sol: Every CFL is accepted by the LBA.

73. **Ans: (a) & (b)**

Sol: The language of palindromes over a one symbol alphabet is regular. The language of palindromes is always a CFL.

74. **Ans: (c)**

Sol: NFA & DFA both accept the regular sets

Scanned with CamScanner

Chapter 3 Turing Machines, Modifications, CSLs, Recursive & RE sets

01. In the course of its computation does a Turing Machine ever visit a particular state Q?
(a) it is undecidable
(b) it is decidable
(c) it is partially decidable
(d) it is not a decision problem

02. The following problems are NP-complete, choose the ***true*** answer
(a) the Hamiltonian circuit problem, the knapsack problem, the graph coloring problem
(b) the max clique problem, the bin packing problem, the sum of subsets problem, the node cover problem
(c) the edge cover problem, the traveling salesman problem
(d) the finiteness, infiniteness and emptiness problems of CFLs.

03. The set of all natural numbers that are powers of 16, represented in base 16.
(a) is R.E but not recursive
(b) is recursive but not context sensitive
(c) is context sensitive but not context free
(d) is context free and regular

04. When a multitape TM of time complexity T(n) is reduced to a single tape turing machine the complexity can go upto
(a) (T(n))**2 (b) T(n) only
(c) T(n)! (d) None of the above

05. Which of the following problems about programs in a real programming languages is decidable?
(a) Whether a given program can loop forever on some input
(b) Whether a given program ever produces an output
(c) Whether two programs produce the same output on all inputs.
(d) None of the above

06. Mr.Kumar polynomially reduced every language L in NP to L^1. Which of the following is ***true?***
(a) L^1 is NP-complete problem
(b) L^1 is NP-Hard problem
(c) L^1 is NP problem
(d) L^1 is P problem

07. Consider the following language
L = {<M>: M is a TM, L(M) contains infinite number of words}
Which of the following statement is ***true*** regarding the above language?
(a) $L \in R$
(b) $L \in RE$
(c) $L \notin RE$ but $L \in$ co-RE
(d) $L \notin RE$ and $L \notin$ co-RE

Scanned with CamScanner

08. Let G represent an undirected graph and let SPATH = {⟨G, a, b, k⟩ | G contains a simple path of length atmost k from a to b} and LPATH = {⟨G, a, b, k⟩ | G contains a simple path of length atleast k from a to b}.
Which of the following statements is ***true*** regarding the above languages?

(a) SPATH ∈ P and LPATH ∈ NP–complete
(b) SPATH ∈ P and LPATH ∈ P
(c) SPATH ∈ NP and LPATH ∈ P
(d) None of the above

09. Consider the TM whose states are $\{q_0, q_1, q_2\}$, whose input alphabet is {a, b, c}, whose tape alphabet is {a, b, c}, whose only halt state is q_2, whose start state is q_0 and which has the following arcs:

An arc from q_0 to q_1 labelled (a, a, R)
An arc from q_1 to q_0 labelled (a, a, L)
An arc from q_1 to q_1 labelled (b, b, R)
An arc from q_1 to q_2 labelled (c, c, R)

Let L be the language accepted by this machine. Which of the following statements is ***false*** regarding the above TM?

(a) There is a non-empty string of length '2' which is in L.
(b) There is a non-empty string of length '1' which is not in L.
(c) The machine halts on all inputs.
(d) None of the above

10. Match the following:

List – I (Language)

P. Recursive sets
Q. DCFL
R. CFLs
S. Finite sets

List – II (Closure properties)

1. Union properties and complement
2. Not union, not intersection but closed under complement
3. Union but not intersection or complement
4. Union and intersection but not complement
5. Union, but not intersection or complement
6. Not closed under union, intersection or complement

Codes:

(a) P–1, Q–5, R–3, S–4
(b) P–6, Q–4, R–3, S–2
(c) P–1, Q–3, R–6, S–1
(d) P–1, Q–2, R–3, S–1

Data for Q11 and Q12 are given below. Solve the problems and choose correct answer

Ram takes a language L. He is able to show that there exists a nondeterministic turing machine which can accept the language in polynomial time. He is also able to show that L reduces to the 3-SAT problem. Shyam is able to show that L reduces to the 2-SAT problem.

Scanned with CamScanner

11. Ram's results show that
    (a) L is in P
    (b) L is NP-hard but not NP-complete
    (c) L is NP-complete
    (d) P=NP

12. Shyam's result combined with Ram's results show that
    (a) P=NP
    (b) P is not the same as NP
    (c) L is NP-complete but not in P
    (d) L is in P and L is not NP-complete

13. Choose the wrong statement?
    (a) the class of all formal languages is countably infinite
    (b) the set of all primes is countably infinite.
    (c) the class of all DCFLs is countably infinite
    (d) the class of all turing machines is countably infinite

14. If a set and its complement are both R.E. then the set is
    (a) R.E. but not recursive
    (b) recursive
    (c) recursive but never a CSL
    (d) recursive but never the empty set

15. Let L be R.E but not recursive, then the complement of L is
    (a) recursive (b) R.E.
    (c) not R.E. (d) the empty set

Statement for Linked answer Q16 & Q17 is given below.

Ram obtains an enumeration of all the turing machines and can talk about the ith turing machine. He then obtains an enumeration of all input strings to the turing machine and can thus talk about the jth input to a turing machine. Shyam runs the ith turing machine M_i on input w_j, the jth input string, for k steps and determines $L_y=\{<M_i, w_j>|$ where the ith turing machine halts on the jth input string$\}$. Thomas runs the input w_j on M_i and determines $L_n= \{<M_i, w_j>|$ where the string w_j is not accepted by $M_i\}$.As Shyam and Thomas keep building up their language Rahim determines the language $L_1=L_x \cup L_y$.

16. Choose the ***correct*** statement
    (a) Thomas will not be able to determine L_n as L_n is not R.E.
    (b) Thomas will determine all strings in L_n as L_n is a recursive set.
    (c) Shyam will not be able to determine L_y as L_y is not R.E.
    (d) Shyam will be able to determine L_y as L_y is recursive.

17. Choose the ***correct*** statement.
    (a) Rahim will not be able to determine L_1 as L_1 is not R.E.
    (b) Rahim will be able to determine L_1 as L_1 is recursive.
    (c) Rahim will be able to determine L_1 as L_1 is R.E.
    (d) Rahim will be able to determine L_1 as L_1 is a finite set.

Scanned with CamScanner

18. The grammar

SaDAD → aA|bB|aD
DSaSaD → aD|bD|aA|a|b
ADADabD → a|bB
Ba → aSSSSSSSSSSSS|a|b

can be classified as

(a) Type 0 (b) Type 1
(c) Type 2 (d) Type 3

19. The complement of the language L containing an equal number of a's, b's, c's, d's, ... z's is

(a) R.E but not regular or context free
(b) Context free
(c) Context sensitive but not context free
(d) Recursive and not a CFL.

20. Choose the ***correct*** statement:

(a) The class of all languages over the alphabet (a, b, c, d, e) is not countably infinite.
(b) The class of all finite sets that are accepted by push down automata is not countably infinite.
(c) The class of all CFLs union the set of all R.E. sets is finite
(d) The class of all linear bounded automata do not have a one to one mapping with the integers in base 99.

21. The class of R.E. sets is closed under

(a) Union and complement and homomorphism.
(b) Intersection and complement and reversal
(c) Union, intersection and complement
(d) Union and intersection

22. The grammar

M → PDA
PDA → DPDA
DPDA → LBA
LBA → TM
TM → a

can be classified as

(a) Type 0 (b) Type 1
(c) Type 2 (d) Type 3

23. If in a turing machine we take away its ink so that it cannot write on the input tape it becomes a

(a) LBA (b) DPDA
(c) DFA (d) 2DPDA

24. The complement of the language of squares in unary in the language and all palindromes in unary is

(a) Regular and not finite
(b) CFL but not DCFL or regular
(c) R.E but not recursive.
(d) Context sensitive

25. The language

$\{a^i b^j | i \text{ not equal to } j\} \cup \{a^i b^j | i \text{ equal to } j\}$ is

A. Type 0
B. Type 1
C. Type 2
D. Type 3

Choose the ***correct*** answer:

(a) A > B > C > D (b) D > A > B > C
(c) A > B > D > C (d) D > C > B > A

Scanned with CamScanner

26. Which of the following is ***true***?
   (a) The complement of a Context Free Language is Context Free Language.
   (b) The complement of a recursively enumerable language is recursively enumerable.
   (c) The complement of a recursive language is either recursive or recursively enumerable.
   (d) The intersection of a context-free languages need not be context-free

27. Which of the following statements is ***correct***?
   (a) Undecidable languages cannot be decided by any TM.
   (b) Rice's theorem says that all non – trivial properties about the languages of a TM are undecidable.
   (c) Church turing thesis states that any Mechanical computation can be done by TM.
   (d) All of the above

28. Which of the following language is undecidable?
   (a) L = {<M> | M is a TM and the size of L(M) can be divided by 3}.
   (b) L = {<M> | M is a TM and M has atmost 75 states}.
   (c) L = {<M>|M is a TM and L(M) recursive}.
   (d) L = {< M_1, M_2 > | M_1 & M_2 are TM and $L(M_1) \cap L(M_2) = 0$}.

29. Consider the TM M defined as follows:
   $\delta(A,a) = (B,\beta,R)$ β-Blank symbol.
   $\delta(B,a) = (B,\beta,R)$
   $\delta(B,b) = (A,\beta,R)$
   $\delta(B,f) = (q_f,\beta,R)$ q_f – final state
   Then which of the following is ***true***?
   (a) M accepts the string ab
   (b) M accepts the string ba
   (c) M accepts the string aba
   (d) M accepts all the strings ending with a

30. Which of the following statements is wrong?
   (a) Every recursive language is recursively enumerable.
   (b) A language is accepted by a finite automaton if and only if it is context free.
   (c) Recursive languages are closed under intersection.
   (d) A language is accepted by a finite automaton if and only if it is right-linear

31. When considering the operations of intersection and complement choose the ***correct*** statement
   (a) The recursive sets and R.E. sets are closed under intersection but not under complement
   (d) The context free languages and recursive sets are closed under intersection but not under complement
   (c) The R.E. sets and regular sets are closed under intersection and complement
   (d) The context sensitive languages are closed under intersection and the R.E sets are not closed under complement

Scanned with CamScanner

32. Match the following:

List–I

(A) Finite length C programs

(B) 98 dimensional TMs

(C) 98 headed turing machines

(D) 98 tape multiple TMs

List–II

1. R.E. sets
2. recursive sets
3. CFLs
4. CSLs

Codes:

	A	B	C	D
(a)	1	3	4	2
(b)	1	1	1	1
(c)	1	2	3	4
(d)	None			

33. Which of the following sets are countable?

(a) The class of all languages accepted by Turing machines

(b) The class of all languages not accepted by any Turing machine

(c) The class of all languages that are not recursive

(d) The class of all languages that are not finite

34. Consider the following languages

L_1: $\{w \mid w = w_1 w_2 - - - - w_n, w_i \in \Sigma$ and $w_1 + w_2 + - - - + w_n = 10\}$

Over the input alphabet $\{1,2,5\}$

L_2: $\{a^n b^n c^i \mid n, i \geq 1\} \subseteq \{a,b,c\}^*$

L_3: $\{a^i b^n c^n \mid n, i \geq 1\} \subseteq \{a,b,c\}^*$,

Which of the following statements is ***true***?

(a) L_1 is regular and L_2 and L_3 are context free

(b) L_2 and L_3 are context free and L_1 is not regular

(c) L_1 is regular and L_2 and L_3 are not context free

(d) L_2 and L_3 are context sensitive and L_1 is not context free

35. Anitha finds that the elements of a language L can be enumerated by an algorithm.

Lavanya finds that the complement of L can be accepted by some Turing Machine.

L is

(a) recursively enumerable and not recursive

(b) not recursively enumerable

(c) recursive but never a CSL

(d) recursive and perhaps a CFL

36. Match the following:

List – I (Grammar)

P. $S \rightarrow Saaaba$
$S \rightarrow Sbbbaaabbb|a|b$

Q. $S \rightarrow aSa|bASb|a|b|c$
$S \rightarrow A\ SabaS|a$
$A \rightarrow bbaacc$

R. $S \rightarrow ssssSsssS$
$SSSSSS \rightarrow ssssS$
$S \rightarrow Ss$

S. $S \rightarrow aSBC|aBC$
$CB \rightarrow BC$
$aB \rightarrow ab$
$bB \rightarrow bb$
$bC \rightarrow bc$
$cC \rightarrow cc$

Scanned with CamScanner

List – II (Classification)

1. Type 3 and left linear
2. Type 2 and not generating a regular set
3. Type 0 and generating a CFL
4. Type 1 and not generating a CFL, DCFL or a regular set but generating the language an equal number of a's b's and c's.
5. LR(k) and a finite set generated
6. Type 3 and left linear and the empty set generated

Codes:

(a) P–1, Q–2, R–3, S–4
(b) P–6, Q–4, R–3, S–5
(c) P–1, Q–3, R–6, S–2
(d) P–1, Q–2, R–3, S–6

37. If a turing machine is restricted to the number of times it can print a symbol then the set of languages accepted by such turing machines are
(a) all recursive sets only but not finite sets
(b) all CSL's that are not finite
(c) all CFL's that are not finite
(d) all CSL's

38. The language of all palindromes over {a,c} where the length of the palindrome is a prime is necessarily
(a) a CFL
(b) a CSL but not a CFL
(c) a finite set
(d) the empty set

39. The set of all strings over an alphabet of 100 symbols where the number of symbols of any given type is not the same as the occurrences of any other symbol is
(a) CFL
(b) CSL and not CFL
(c) type 0 and finite
(d) regular

40. Match the following:

List – I(Regular Expression)

A. $\{a^n b^n | n>100\}$
B. a*a*a*a*
C. $\{a^n b^n c^n | n>10\}$
D. {a}

List – II(Equivalent)

1. DCFL
2. Type 3
3. CSL
4. Finite set
5. Type 0 and not finite
6. Type 1 and not finite

Codes:

(a) A–1, B–2, C–3, D–4
(b) A–6, B–4, C–3, D–5
(c) A–1, B–3, C–6, D–2
(d) A–1, B–2, C–3, D–6

Common Data for Q41 & Q42 is given below.

Ashok takes a turing machine M_1 and removes its ink to obtain a machine M_2. Anita takes M_2 and restricts the number of states of the machine to obtain M_3.

Scanned with CamScanner

41. M_2 is a
(a) Turing machine
(b) LBA not PDA
(c) PDA not FA
(d) FA only

42. M_3 accepts a
(a) finite set
(b) infinite set
(c) type 1 and not type 2
(d) the empty set only

43. Match the following:

List – I(Language)

A. 0^*

B. {0}

C. $\{ww|w \text{ in } a^*b^*\}$

D. Equal number of a's and b's

List – II(Type)

1. Regular not finite
2. Finite
3. CSL not CFL
4. CFL not regular
5. Empty set
6. R.E. and not recursive

Codes:

(a) A–1, B–2, C–3, D–4
(b) A–6, B–4, C–3, D–5
(c) A–1, B–3, C–6, D–2
(d) A–1, B–2, C–3, D–6

44. I have five friends Manoj, Madhumitha, Sravani, Nirali and Vaidhehi; and five languages L_0, L_1, L_2, L_3, and L_4. I gave L_1 and L_2 which are DCFL's to Manoj and Madhumitha, L_3 and L_4 which are CFL's to Vaidhehi and Nirali respectively. Sravani had one language L_0 which is Regular Language. They have done the following operations on those languages.

1. L_5 = UNION (L_1, L_2)
2. L_6 = UNION (L_3, L_4)
3. L_7 = INTERSECTION (L_5, L_6)
4. L_8 = KLEENCLOSURE (L_7)
5. L_9 = HOMOMORPHISM (L_7)
6. L_{10} = QUOTIENT(L_9, L_0)
7. L_{11} = INTERSECTION (L_8, L_{10})

Then what about L_{11}?
(a) DCFL
(b) CSL
(c) Recursive
(d) Recursively Enumerable

45. The regular sets are accepted by
(a) Turing machines which have a read only input and a constant size work area
(b) Nondeterministic one pebble machines that have a read only input
(c) Turing machines which have a read only input and infinite size work area
(d) None of the above

46. If a problem has a time complexity 2^N or more as a provably lower bound on a deterministic turing machine ,where N is the size of the input
(a) It can always be simulated on parallel computers in linear time
(b) Is intractable as no polynomial time bounded turing machine can simulate the problem

Scanned with CamScanner

(c) Is intractable which means for all practical purposes only small values of N can be used
(d) None of the above

47. Choose the ***incorrect*** statement from the options given below?
(a) Is $L_1 \cap L_2$ is empty is decidable only in regular sets
(b) Is L = R, where R is a given regular set is decidable in DCFLs
(c) Is the intersection of two DCFLs is a DCFL is decidable in DCFLs
(d) Is the intersection of two CSLs is a CSL is trivially true in CSLs

48. Which of the following is NP – hard problem?
(a) Travelling salesman problem
(b) Directed Hamilton problem
(c) Halting problem (is not determine for an arbitrary deterministic algorithm A with input i ever terminates)
(d) K – Colorable problem

49. Let L be a language over Σ suppose L satisfies two conditions given below
i. L is in NP
ii. For every n, there is exactly one string of length n that belongs to L.
Let L_C be the complement of L in Σ^*
(a) L_C is also in NP
(b) L_C is undecidable
(c) L_C is not in NP
(d) None of the above

50. Match the following:
List – I(Language)
P. $\{a,b\}^*ab\{a+b\}^*$
Q. $\{0^m1^n0^{(m+n)} \mid m,n>=1\}$
R. $\{w\$w^R \mid w \text{ in } (a+b)^*\}$
S. $\{a^nb^nc^nd^n \mid n>=1\}$

List – II(Automata accepting the same)
1. NFA
2. DPDA but not a FA
3. PDA but not a DPDA
4. LBA but not a PDA
5. Halting turing machine but not a LBA
6. Turing machine and not halting turing machine

Codes:
(a) P–1, Q–2, R–3, S–4
(b) P–6, Q–4, R–3, S–2
(c) P–1, Q–3, R–6, S–3
(d) P–1, Q–2, R–3, S–5

Common Data for Q.51 to Q.52

I. Consider the Turing Machine given below:-

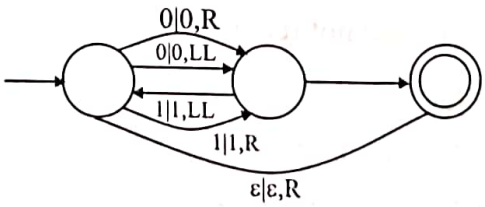

Let the language accepted by the above machine M_1 be L_1.

II. Consider the PDA M_2 given below which accepts a language L_2

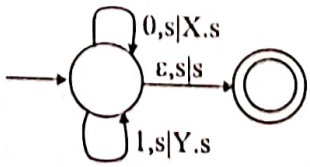

Scanned with CamScanner

III. Consider the NFA M_3 given below which accepts the language L_3.

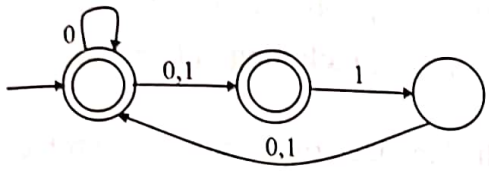

51. Choose the ***false*** statement
(a) $L_1=L_2=L_3$
(b) $L_1=L_2$ and $L_2^1 = L_3^1$
(c) $L_1.L_2=L_2.L_3$
(d) $L_2=\phi$ and $L_1=L_3$

52. The set accepted by M_1, M_2 and M_3 are
(a) all finite
(b) all regular
(c) all CFL but not regular
(d) all R.E but not CFL

53. The regular expression (0*1*0*1*)* represents the set accepted by
(a) M_3 but not M_2 or M_1
(b) M_1 but not M_3 or M_2
(c) M_2 but not M_1 or M_3
(d) M_1, M_2 and M_3

54. The grammar
S → aA|bB|aD
D → aD|bD|aA
A → a|bB
B → a
can be classified as
(a) Type 0 (b) Type 1
(c) Type 2 (d) Type 3

55. Match the following:
List – I(Language)
A. {a,b}*ab
B. $\{a^n b^n | n > 1000\}$
C. $\{ww^R | w \text{ in } (a+b)^*\}$
D. {wwwwwww|w in (a+b)*}
List – II(Automata accepting the same)
1. 2DFA
2. DPDA but not a FA
3. PDA but not a DPDA
4. LBA but not a PDA
5. Halting turing machine but not a LBA
6. Turing machine but not halting turing machine
Codes:
(a) A–1, B–2, C–3, D–4
(b) A–6, B–4, C–3, D–5
(c) A–1, B–3, C–6, D–2
(d) A–1, B–2, C–3, D–6

56. The language of primes in base 16 is
(a) R.E. but not context sensitive
(b) Recursive but not context sensitive
(c) DCFL
(d) context sensitive

57. The complement of the language L containing the set of all strings containing an unequal number of symbols from the Hebrew alphabet
(a) Is R.E but not regular or context free or finite.
(b) Context free but not regular or finite.
(c) Is context sensitive but not context free or finite.
(d) Recursive but not a CFL.

Scanned with CamScanner

58. Match the following:

List – I(Language)

A. $\{ww^R \mid$ w in Greek alphabet and length of w less than 100 symbols$\}$

B. Complement of strings of the form $\{wwwwwwww \mid$ w in (Bengali alphabet)*$\}$

C. $\{wccccccccw^R \mid$ w in(Sanskrit alphabet)*$\}$

D. $\{wwwwwww \mid$ w in (Hindi alphabet)*$\}$

List – II(Language Classification)

1. Type 3
2. Type 2 and not type 3
3. Type 2 or DCFL
4. Type 1 but not type 2
5. Recursive set not type 1
6. Type 0 and not type 1

Codes:

(a) A–1, B–2, C–3, D–4
(b) A–6, B–4, C–3, D–5
(c) A–1, B–3, C–6, D–2
(d) A–1, B–5, C–3, D–4

Common Data for Q59 & Q60 is given below.

Consider the following grammar:

$S \rightarrow FM$, $F \rightarrow FaA$, $F \rightarrow FbB$,
$Aa \rightarrow aA$, $Ab \rightarrow bA$, $Bb \rightarrow bB$, $AM \rightarrow Ma$,
$BM \rightarrow Mb$, $F \rightarrow \varepsilon$, $M \rightarrow \varepsilon$.

59. The Language generated by the above grammar is

(a) L = {w | w is combination of {a,b} including null string}
(b) L = {ww | w is combination of {a,b} including null string}
(c) L = {waw | w is combination of {a,b} including null string}
(d) L = {wbb | w is combination of {a,b} including null string}

60. The language of the previous problem is

(a) Regular Languages
(b) Context Free Languages
(c) Context Sensitive Languages
(d) Recursive Enumerable Languages

61. Let A = (11, 100, 111) and B=(111, 001, 11) and the alphabet $\Sigma = \{0, 1\}$. Then the solution for PCP is ____.

(a) (2, 3, 1) (b) (2, 1, 3)
(c) (1, 2, 3) (d) None

Common Data for Q62 & Q63 is given below.

Let M be the Turing Machine.

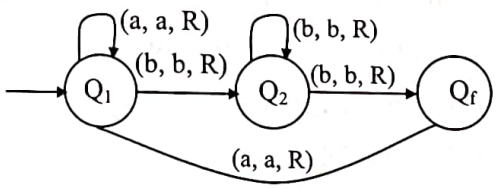

62. The language accepted by M is

(a) All the strings of a's and b's start and end with different symbols.
(b) All the strings of a's and b's start with 'a'.
(c) All the strings of a's and b's start with 'b'.
(d) All the strings of a's and b's end with 'b'.

Scanned with CamScanner

63. The number of states is minimal FA that accepts the same language is _____.

64. Let M_1 and M_2 be the FA and PDA and A is any property. Then which of the following is *true*?

(a) If A is decidable for M_1, then A is decidable for M_2

(b) If A is decidable for M_2, then A is also decidable for M_1

(c) If A is decidable for M_1, then A is undecidable for M_2

(d) If A is decidable for M_1, then it may undecidable for M_2

65. Recursively enumerable languages are not closed under:

(a) Complementation (b) Union

(c) Intersection (d) None of these

66. Which of the following statements is ***true?***

(a) A pushdown machine behaves like a Turing machine when it contains two auxiliary memories.

(b) A finite state machine can be assumed to be a Turing machine of finite tape length, rewinding capability and unidirectional tape movement.

(c) Both (a) and (b)

(d) None of the above

Scanned with CamScanner

Solutions

01. Ans: (c)

Sol: If it enter state Q let it be a final state. So undecidable run the TM.

02. Ans: (a) & (b)

Sol: These are standard NP–complete problems. These are simple algorithms to decide if a CFL is finite, empty or infinite. The equivalence of CFLs is undecidable.

03. Ans: (d)

Sol: The language is $\{16^n \mid n \geq 0\}$

$= \{a^n \mid n \geq 0\}$, if $a = 16$

04. Ans: (a)

Sol: Reducing multiple tapes to one tape squares the time complexity at most.

05. Ans: (d)

Sol: (a) reduces to the halting problem of TMs

(b) reduces to the printing problem of TMs

(c) reduces to the equivalence problem of TMs

06. Ans: (a)

Sol: This is the definition of NP–completeness.

07. Ans: (c)

Sol: The complement of L is finite. Since L is R.E & not recursive its complement is in co–RE.

08. Ans: (a)

Sol: If k = n the number of nodes of G, the LPATH is the Hamiltonian cycle problem which is NP-complete.

09. Ans: (b)

Sol:

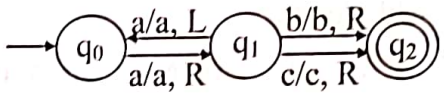

'a' is not accepted by the TM

10. Ans: (d)

Sol: P–1: recursive sets are closed under union, intersection & complement.

Q–2: DCFLs are closed under complement but not under union or intersection.

R–3: CFLs are closed under union but not intersection or complement.

S–1: regular sets are well behaved class of languages. They are closed under partially on all operations.

11. Ans: (c)

Sol: L is in NP. L reduce to 3 SAT so L is NP–complete. L reduces to 2 –SAT So it is in P.

12. Ans: (d)

Sol: L is in P & not NP–complete.

13. Ans: (a)

Sol: The class of all finite languages is not countably infinite.

Scanned with CamScanner

14. **Ans: (b)**

Sol: If a set & its complement are both R.E. then the set is recursive.

15. **Ans: (c)**

Sol: The r.e sets are not closed under complement.

16. **Ans: (a)**

Sol: The membership problem of TMs is undecidable.

17. **Ans: (a)**

Sol: The membership problem of TMs is undecidable.

18. **Ans: (a)**

Sol: It is not type 1, 2 or 3. It is type 0 by definition.

19. **Ans: (b)**

Sol: The language is a CSL & its complement is a CFL.

20. **Ans: (a)**

Sol: The set of all languages over some alphabet is not countably infinite.

21. **Ans: (d)**

Sol: The R.E. sets are not closed under a complement but are closed under union & intersection.

22. **Ans: (a)**

Sol: $\alpha \rightarrow \beta$, α & β any thing is a type 0 grammar

23. **Ans: (c)**

Sol: If we take away ink from a tuning machine it becomes a finite automata.

24. **Ans: (d)**

Sol: The square in unary $\cap$ palindrome in unary = square in unary are a CSL.

25. **Ans: (a)**

Sol: The set is regular as it is a^*b^* hence Type 3. Type 3 is Type 2, Type 2 is Type 1 & Type 1 is Type 0.

26. **Ans: (d)**

Sol: The CFLs are not closed under complement. The R.E. sets are not closed under complement.

27. **Ans: (d)**

Sol: (c) church's thesis states the TM is a model for a procedure.

(b) By Rice's theorem all non–trivial properties of a R.E. set are undecidable.

(a) Undecidable languages are not R.E.

28. **Ans: (c) & (d)**

Sol: (a) This is a mod 3 machine

(b) We can examine the TM and count the number of states

(c) It is undecidable of a TM is accepting a recursive set.

(d) The intersection of two R.E. sets is undecidable.

Scanned with CamScanner

29. Ans: (d)

Sol:

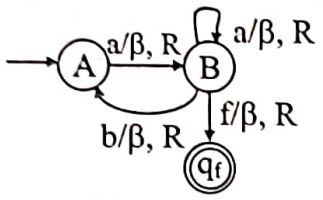

30. Ans: (b)

Sol: The CFLs are a bigger class than the regular sets.

31. Ans: (d)

Sol: The R.E. sets are not closed under complement. The CFLs are not closed under intersection or complement.

The CSLs are closed under union, intersection & complement.

32. Ans: (b)

Sol: TMs ≡ finite length C programs

≡ multi–dimensional TMs

≡ multi–headed TMs

≡ multi tape TMs

33. Ans: (a)

Sol: The complement of R.E. sets cannot be counted. The recursive sets though countably infinite cannot be counted. The infinite language cannot be counted.

34. Ans: (a)

Sol: L_1 is regular as the length is restricted L_2 & L_3 are standard CFLs.

35. Ans: (d)

Sol: Every recursive set is an algorithm, it may be a special case CFL.

36. Ans: (a)

Sol: S – 4 . The grammar generates the languages of equal no. of a's , b's & c's which is a CSL.

37. Ans: (d)

Sol: Consider the printing problem of TMs. So all R.E. sets are accepted. In the choices the closest is all CSLs.

38. Ans: (b)

Sol: languages $\cap$ a^* = prime over a which is a CSL & not a CFL.

39. Ans: (b)

Sol: Since we have atleast 3 symbols. We have $L = \{a^i b^j c^k\}$ $\{i \neq j \cap j \neq k \cap k \neq i\}$ is a CSL.

40. Ans: (a)

Sol: D – 4. {a} is a finite set & hence it is regular.

41. Ans: (d)

Sol: If we take a TM & take away its ink it becomes a finite automata.

42. Ans: (a)

Sol: If we restrict the alphabet & states of a FA we can accept only the finite sets.

43. Ans: (a)

Sol: D – 4. L = {equal no. of a's & b's} is a CFL that is not regular.

Scanned with CamScanner

44. Ans: (d)

Sol: L_1 – DCFL, L_2 – DCFL

L_3 – CFL, L_4 – CFL

L_0 – regular

L_5 = union(L_1, L_2) = CFL

L_6 = union(L_3, L_4) = CFL

L_7 = intersection (L_5, L_6) = CFL

$L_8 = L_7^*$ = R.E. set

L_9 = Homomorphism(L_7) = R.E. set

L_{10} – R.E & L_{11} – R.E.

45. Ans: (a)

Sol: If we take a TM & take away its ink it does not become a finite automata.

46. Ans: (b) & (c)

Sol: The problem is intractable on any deterministic machine 2^N grows very fast as N increases.

47. Ans: (c)

Sol: The intersection of two DCFL's can simulates all the invalid computations of Turing machines.

48. Ans: (c)

Sol: The halting problem can be reduced to the satisfiability problem, so it is NP – hard.

49. Ans: (a)

Sol: Consider all strings of length from 0 to n. We can decide they are in NP^c in polynomial time.

50. Ans: (a)

Sol: S–4 should be in the answer.

The language $\{a^n b^n c^n d^n \mid n \geq 1\}$ is a CFL & not a CSL as shown by the pumping lemma for CFLs.

51. Ans: (b)

Sol: $L_1 = \varepsilon$, $L_2 = \varepsilon$

So $L_1 = L_2$

L_3 is not ε

52. Ans: (a)

Sol: $L_1 = L_2 = \varepsilon$ is finite

L_3 is finite.

53. Ans: (a)

Sol: $L_3 = (0 + 1)^*$

54. Ans: (d)

Sol: The grammar is a right linear grammar & hence type 3.

55. Ans: (a)

Sol: A is a regular set

B is a DCFL

C is a CFL that is not a DCFL

D is a CSL not a CFL

56. Ans: (d)

Sol: The CSL's can recognize the primes but not DCFLs.

57. Ans: (b)

Sol: Equal number of symbols or unequal number of symbols more than 2 makes it a CSL that is not CFL or regular. The complement is however a CFL.

Scanned with CamScanner

58. Ans: (a)

Sol: A is finite hence of Type 3

A–1 should be in the answer

B is CFL & hence Type 2

B–2 should be in the answer

C is CFL & not a DCFL

Then C–3 should be in the answer

D is CSL not CFL

So D–4 should be in the answer.

59. Ans: (b)

Sol: The set generated is $\{ww/w \in (a+b)^*\}$

60. Ans: (c)

Sol: The set generated is a CSL.

61. Ans: (c)

62. Ans: (d)

Sol: So long as the m/c see an 'a' it is state Q_1. The b's lead it to state Q_2. From Q_2 it goes to the final state Q_f. At least one b must terminate the input.

$a^* b^+$ is the set accepted.

63. Ans: 2

Sol:

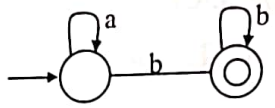

64. Ans: (b)

Sol: As every FA is a PDA we can say if it is decidable for M_2 it is decidable for M_1

65. Ans: (a)

Sol: R.E. sets are not closed under complement

66. Ans: (c)

Sol: A two pushdown tape m/c is a TM and a two way DFA is assumed in (b).

Scanned with CamScanner

Compiler Design

Scanned with CamScanner

Chapter 1 Lexical Analysis

01. The lexical analyzer
    (a) is called the backend of the compiler
    (b) is called the frontend of the compiler
    (c) is called the intermediate stage of the compiler
    (d) none of the above

02. In the lexical analysis phase of a compiler
    (a) lexemes & tokens are the same
    (b) lexemes & tokens have no relationship
    (c) lexemes are formed from tokens
    (d) tokens are formed from lexemes

03. In a lexical analyzer
    (a) tokens are larger in size than lexemes
    (b) lexemes demand more storage space than tokens
    (c) lexemes & tokens occupy the same amount of space
    (d) lexemes & tokens can both be accommodated in a single by time of storage

04. Handling macro expansion is taken care in the
    (a) syntax analysis phase
    (b) semantic analysis phase
    (c) code generation phase
    (d) none of the above

05. Macros & preprocessor directives are handled
    (a) in the lexical analysis phase
    (b) during the linking of the object modules
    (c) during load time
    (d) by a modification of the final code generated by the compiler

06. The identifier in the source program is stored in the symbol table during
    (a) Semantic analysis
    (b) Syntax analysis
    (c) Lexical analysis
    (d) Code generation phase

07. In some programming languages there is no distinction between reserved words & variable names. This feature can be handled
    (a) completely by the lexical analysis
    (b) only during the semantic analysis phase
    (c) by the syntax analysis passing information back to the lexical analysis
    (d) cannot be allowed in any HLL.

08. Type checking is handled by
    (a) The lexical analyzer
    (b) The syntax analyzer
    (c) The semantic analyzer
    (d) Register optimization

09. The formal model used for the lexical analyzer is
    (a) the finite automata
    (b) the push down automata
    (c) the two push down tape machine
    (d) the turing machine

Scanned with CamScanner

10. Which of the following is false in case of lexical analysis in the usual compiler
    (a) It can check if the parenthesis in expression match
    (b) It can check for any pair of matching parenthesis
    (c) It can check the structure of if-then-else constructs
    (d) It can only handle regular expressions

11. The lexical analysis
    (a) can determine all the control statements of structured programming for structural constructs
    (b) can determine if a variable is defined before it is used
    (c) can check if an identifier appears more than 10 times in the source program
    (d) can check if the number of actual & formal parameters in functions are the same numbers.

12. Regular expression can be used to model in the lexical analysis
    (a) The structure & lexemes with fixed length identifiers excluded
    (b) The structure of tokens
    (c) The structure of tokens but not lexemes
    (d) The structure of lexemes with variable length identifier included

13. The time taken by the lexical analysis phase
    (a) is the largest in a computer among all phases
    (b) is the smallest in a computer among all phases
    (c) is larger than what the syntax analysis takes but less than that of the semantic analysis takes
    (d) is smaller than the time taken for both syntax & semantic analysis phases

14. In the internationalization of a compiler, where the source program can be in different natural languages
    (a) It is sufficient to change and adjust the front-end or lexical analysis of a computer
    (b) The entire computer has to be re-written
    (c) The backend of the computer cannot be reused.
    (d) The number of registers needed can vary

15. The listing of the source program by a compiler occurs during
    (a) the lexical analysis phase
    (b) the syntax analysis phase
    (c) the semantic analysis phase
    (d) during the code generation phase

16. Comments in the source program to a computer are deleted by
    (a) The lexical analysis
    (b) The semantic analysis
    (c) The code generation
    (d) The code optimizer

Scanned with CamScanner

17. The lexical analysis & the syntax analysis can be focused together into one phase
    (a) This has the advantage that a very large BNF grammar results
    (b) Since regular grammars are simpler than context-free grammars and we can have a separation of concerns between lexical concerns & syntax concerns.
    (c) The complexity of the frontend decreases
    (d) None of the above

18. The # define … directive in C is handled on a C compiler
    (a) by the lexical analysis
    (b) by the syntax analysis
    (c) by the semantic analysis
    (d) by the code optimizer

19. A wants to set a variable 'are' to 1116. He does the following
    (1) he uses a directive # define are 1116
    (2) he uses an initialization statement in 'main' are = 0;
    Choose the correct statement
    (a) (1) is done during lexical analysis time & (2) during 'exe' time
    (b) Both (1) & (2) are handled during 'exe' time
    (c) Both (1) & (2) are handled by the syntax analysis
    (d) Both (1) & (2) are handled by the semantic analysis

20. Comments in the source program are
    (a) Deleted by the lexical analysis
    (b) Deleted by the syntax analysis
    (c) Stored in the symbol table
    (d) Embedded in the object code in coded form

Scanned with CamScanner

Solutions

01. **Ans: (b)**
Sol: The lexical analyzer is the frontend of the compiler which reads the source program.

02. **Ans: (d)**
Sol: First of all the source program is broken up into lexemes, these are classified & converted to tokens.

03. **Ans: (b)**
Sol: Consider a lexeme for an identifier, it can be very large where as the token is of fixed size.

04. **Ans: (d)**
Sol: The frontend of the compiler takes care of macro expansion.

05. **Ans: (a)**
Sol: The lexical analysis phase takes care of handling macros and preprocessor directives.

06. **Ans: (c)**
Sol: In the lexical analysis phase identifiers are stored in the symbol table & mapped to tokens.

07. **Ans: (c)**
Sol: In a language the PL/I on the IBM mainframe the syntax analysis co-operates with the lexical analyzer to distinguish between variable names & reserved words.

08. **Ans: (c)**
Sol: Type checking is a context sensitive feature that can only be handled by the semantic analyzer.

09. **Ans: (a)**
Sol: Though all the formal models can be used. the finite automata is generally used to model the lexical analyzer.

10. **Ans: (d)**
Sol: The lexical analysis is modeled by the finite automata and parenthesis matching & checking the structure of if-then-else statements is a context free feature which is not regular.

11. **Ans: (c)**
Sol: This feature can be handled by a finite automata, the remaining choices are context-free or context sensitive & not regular.

12. **Ans: (d)**
Sol: The structure of all lexemes in some programs can be verified & described by a regular grammar.

13. **Ans: (a)**
Sol: The lexical analysis time is determined by the I/O time in the computer. As the source program is normally stored on the disk or other backup store there is a bottleneck of I/O time. So the front end of the computer takes the maximum amount of time.

Scanned with CamScanner

14. Ans: (a)

Sol: It is sufficient to change or modify the front end. The entire compiler can be reused.

15. Ans: (a)

Sol: The listing is merely done by outputting whatever is read in during lexical analysis

16. Ans: (a)

Sol: The squeezing out of comments can be done in the lexical analysis phase as the deletion of comments & checking of their structure can be modeled by regular expressions.

17. Ans: (b)

Sol: The separation of concerns makes the complexity less.

18. Ans: (a)

Sol: This is a preprocessor directive and can be handled during lexical analysis time.

19. Ans: (a)

Sol: (1) is a preprocessor directive & choice (2) is an executable statement.

20. Ans: (a)

Sol: Comments are deleted & squeezed out during lexical analysis.

Scanned with CamScanner

Chapter 2 Parsing Techniques

01. Top down parsing techniques
(a) simulate a leftmost derivation
(b) simulate the reverse of a leftmost derivation
(c) simulate a rightmost derivation
(d) simulate the reverse of a rightmost derivation

02. Every LR(0) grammar is
(a) LR(1) grammar
(b) may be LR(1) grammar
(c) sometimes not LR(1) grammar
(d) none of the above

03. The LL(1) & SLR(1) grammars are
(a) the same
(b) LR(1) is more powerful
(c) SLR(1) is more powerful
(d) incomparable

04. The operator precedence technique
(a) simulates building the parse tree top down
(b) simulates building the parse tree bottom up
(c) simulates the reverse of a leftmost derivation
(d) none of the above

05. The type of inadequate states that can arise in the LR(1) technique are
(a) shift – reduce conflicts
(b) shift – shift conflicts
(c) reduce – reduce conflicts
(d) none of the above

06. The grammar $S \rightarrow SS \mid aa \mid \varepsilon$
(a) is LR(0)
(b) is SLR(1)
(c) is LALR(1)
(d) none

07. The grammar $S \rightarrow T \mid \varepsilon \mid a, \quad T \rightarrow S \mid a$
(a) is ambiguous and hence not SLR(1)
(b) is unambiguous & LR(0)
(c) is not LALR(1) but is SLR(1)
(d) is LR(1)

08. When a LR(1) machine is constructed for the if statement grammar

$S \rightarrow$ if (E) S
$S \rightarrow$ if (E) S else S
$S \rightarrow a$
$E \rightarrow i$

(a) there will be no inadequate states
(b) the dangling else ambiguity does not arises
(c) the dangling else ambiguous can be resolved by using the fact that else should belong to the nearest if
(d) none of the above

Scanned with CamScanner

09. The grammar

$S \rightarrow TA$

$A \rightarrow \varepsilon \mid +TA$

$T \rightarrow i \mid n$

(a) is LL(1)
(b) is LALR(1)
(c) LR(1) but not LALR(1)
(d) none

10. In the grammar

$E \rightarrow E = E \mid E + E \mid i$

When we construct a SLR(1) machine
(a) No inadequate states parse.
(b) Inadequate states can be resolved using the associativity & precedence of = & +.
(c) Inadequate states cannot be resolved.
(d) None of the above.

11. The grammar $S \rightarrow a$ is
(a) LL(1), LR(1), LALR(1), LR(0), SLR(1) & operator precedence.
(b) LR(1) but not LL(1).
(c) LR(1) & LL(1) but not operator precedence.
(d) None of the above.

12. The grammar

$S \rightarrow \text{while } (E)\ S \mid a$

$E \rightarrow a$

for nested while statements
(a) is not LR(1)
(b) is not SLR(1)
(c) is not LALR(1)
(d) is LR(0)

13. The grammar

$S \rightarrow \text{do } S \text{ while } (E)$

$S \rightarrow a$

$E \rightarrow i$

for nested do-while statements

(a) is LR(1) but not LALR(1)
(b) is LALR(1) but not SLR(1)
(c) SLR(1) but not LR(0)
(d) LR(0) and LL(1)

14. $S \rightarrow bSB \mid \varepsilon,\ B \rightarrow d \mid \varepsilon$ is
(a) LL(1) (b) not LL(1)
(c) LR(0) (d) None

15. The grammar

$S \rightarrow FA$

$A \rightarrow \varepsilon \mid \uparrow TA$

$F \rightarrow i$

reflects that
(a) $\uparrow$ is left associative.
(b) $\uparrow$ is right associative.
(c) Cannot deduce associates from the grammar.
(d) none of the above.

16. The grammar

$S \rightarrow aAa \mid \varepsilon$

$A \rightarrow abS \mid c$

(a) is ambiguous
(b) is LL(1)
(c) is not LL(1)
(d) none

Scanned with CamScanner

17. The following grammar

$A \rightarrow B\,b \mid C\,d$

$B \rightarrow \varepsilon \mid a\,B$

$C \rightarrow c\,C \mid \varepsilon$

(a) is left recursive and hence not LL(1)
(b) is right recursive and hence not LL(1)
(c) is LL(1)
(d) none of the above

18. When there are no Shift/Reduce conflicts in CLR(1), in the corresponding LALR(1)
(a) No Reduce –Reduce conflicts
(b) No Shift – Reduce conflicts
(c) Shift – Reduce conflicts may occur
(d) none of the above

19. Bottom Up parsing techniques
(a) Simulates a leftmost derivation
(b) Simulates the reverse of a leftmost derivation.
(c) Simulates a rightmost derivation
(d) Simulates the reverse of a rightmost derivation

20. Synthesized attribute can be simulated by
(a) LL(1) Grammar
(b) LR(1) Grammar
(c) Ambiguous Grammar
(d) None

Common Data for Q.21 & Q.22

Consider the grammar given below

$S \rightarrow E\,\#$

$E \rightarrow T \mid E;\,T$

$T \rightarrow Ta \mid \varepsilon$

21. Number of inadequate states in DFA with LR(0) items is
(a) 1 (b) 2
(c) 3 (d) 4

22. The above grammar is
(a) LR(0) (b) SLR(1)
(c) LL(1) (d) None

23. The grammar G is

Program → begin d semi X end

$X \rightarrow d\ \text{semi}\ X \mid sY$

$Y \rightarrow \text{semi}\ s\ Y \mid \varepsilon$

(a) The grammar is ambiguous and hence not LL(1)
(b) The grammar is LALR(1) but not LL(1)
(c) The grammar is LR(0) but not LALR(1)
(d) The grammar is LL(1)

24. The grammar

1. $S \rightarrow AB$
2. $A \rightarrow Aa$
3. $S \rightarrow B$
4. $A \rightarrow \varepsilon$
5. $B \rightarrow bB$
6. $B \rightarrow \varepsilon$

If a LL (1) parsing table is constructed for above grammar where T (X, c) represents production used to expand variable X on lookahead 'a', which of the following is true.

(i) T (A, b) = 4
(ii) T (a,$) = 3, 4
(iii) T (A, $) = 4
(iv) T (B, $) = 6, 1

Scanned with CamScanner

(a) (i) & (iv) are correct
(b) (i) alone is correct
(c) (i) & (iii) are correct
(d) (i), (ii) & (iv) are correct

25. Which of the following suffices to convert an arbitrary unambiguous context free grammar to a LL(1) grammar?
(a) removal of left recursion
(b) factoring the grammar alone
(c) removing left recursion and factoring the grammar
(d) none of the above

26. Construct the LALR(1) set of items for the grammar:

$S^1 \rightarrow S$

$S \rightarrow +SS \mid a$

Then, identify, in the list below, one of the LALR(1) sets of items for

(a) [S→a., $]
(b) [S→a., +a]
(c) [S→+SS., $+a]
(d) [S→+SS., $]

27. Consider the grammar

$S \rightarrow (S) \mid [S] \mid SS \mid \varepsilon$ is

(a) left recursive
(b) right recursive
(c) ambiguous
(d) unambiguous

28. Consider the grammar given below:

$S \rightarrow AS \mid b$

$A \rightarrow SA \mid a$

The grammar is

(i) LL (1)
(ii) LR (0)
(iii) LR (1)

(a) (i) & (iii) are correct
(b) (i) & (ii) are correct
(c) (ii) & (iii) are correct
(d) (i) & (ii) & (iii) are not correct

29. $S \rightarrow x\,S\,x \mid x\,T\,x$

$T \rightarrow T\,x \mid x$

This grammar is

(a) LL(1)
(b) LR(0)
(c) SLR(1) but not LL(1)
(d) ambiguous

30. Consider the Grammar

$S \rightarrow (S) \mid SS \mid ()$

In the goto graph of LR(0) items, the number of inadequate states are

(a) 1
(b) 2
(c) 3
(d) 0

31. Construct the LALR(1) sets of items for the grammar:

$S^1 \rightarrow S$

$S \rightarrow *SS \mid a$

Then, identify, in the list below, one of the LALR(1) sets of items for

(a) [S→a., $]
(b) [S→a., +a]
(c) [S→*SS., $+a]
(d) [S→*SS., $]

32. The grammar

$E \rightarrow E * E$

$E \rightarrow E - E$

$E \rightarrow a$ is

(a) LR(1)
(b) SLR(1)
(c) LR(0)
(d) None of the above

Scanned with CamScanner

33. The grammar G is

$A \rightarrow Bd \mid Cd$

$B \rightarrow cd$

$C \rightarrow ad$

(a) not LL(1) (b) LL(1)

(c) Cannot say (d) none

34. Consider an SLR(1) & LALR(1) tables, which of the following is true?

(a) Shift entries are different

(b) Reduce entries are same

(c) Goto entries are different

(d) Error entries are different

35. Consider the grammar $S \rightarrow Cc$, $C \rightarrow cC \mid d$

(a) It is LL(1)

(b) It is SLR(1) but not LL(1)

(c) It is LALR(1) but not SLR(1)

(d) It is LR(1) but not LALR(1)

36. Which of the following statement is true?

(a) Every LL(1) is SLR(1)

(b) Every LL(1) is LR(0)

(c) Every LL(1) is LALR(1)

(d) None of the above

37. Reduce 1/Reduce 2 conflict and shift/reduce 3 conflict are resolved in favor of

(a) Reduce 1 and reduce 3

(b) Reduce 2 and shift

(c) Reduce 2 and reduce 3

(d) None of these

38. The following grammar is

$S \rightarrow Aa/bAc/dc/bda$

$A \rightarrow d$

(a) ambiguous

(b) SLR(1)

(c) LALR(1)

(d) LALR(1) but not SLR(1)

39. **Assertion [a]:** There exist grammars that are LALR(1) but not SLR(1).

Reason [r]: The grammar below is LALR(1) but not SLR(1).

$S \rightarrow AaBb \mid BbBa$

$A \rightarrow \varepsilon, B \rightarrow \varepsilon$

(a) Both (a) and (r) are true and (r) is the correct reason for (a).

(b) Both (a) and (r) are true and (r) is not the correct reason for (a).

(c) Both (a) and (r) are false.

(d) (a) is true but (r) is false.

40. Consider the grammar

$E \rightarrow T + E \mid T$

$T \rightarrow id$

Choose the correct statement

(a) + is left associative

(b) + is right associative

(c) + cannot have associativity

(d) The grammar is ambiguous

41. Consider the grammar

$E1 \rightarrow E$

$E \rightarrow E + E \mid id$

Choose the correct statement

(a) + is left but not right associative

(b) + is right but not left associative

(c) the grammar is unambiguous

(d) + can be either left or right associative.

Scanned with CamScanner

Solutions

01. Ans: (a)

Sol: Top down parsing techniques simulates a leftmost derivation.

02. Ans: (a)

Sol: Every LR(0) grammar is compulsorily a LR(1) grammar.

03. Ans: (d)

Sol: There exist grammars that are LL(1) but not SLR(1). There exist grammars that are SLR(1) but not LL(1). So LL(1) & SLR(1) grammars are incomparable.

04. Ans: (b)

Sol: The operator precedence technique is a bottom up parsing technique. It simulates the reverse of a rightmost derivation & building the syntax tree bottom up.

05. Ans: (a) & (c)

Sol: Both shift-reduce & reduce-reduce conflicts can occur in a LR(1) machine.

06. Ans: (d)

Sol: The grammar is ambiguous

$$S \xrightarrow{*} (SS)^k \xrightarrow{*} \varepsilon^{2k} \xrightarrow{*} \varepsilon$$

The string ε has an infinite number of derivations in the grammar. So, the grammar is ambiguous. No ambiguous grammar can be LR.

07. Ans: (a)

Sol: The grammar is ambiguous.

Consider the derivation in the string a

$$S \to T \to a$$

or $S \to a$

The string 'a' has more than one derivation. So, the grammar is ambiguous.

No ambiguous grammar can be SLR(1) or LR(1).

08. Ans: (c)

Sol: The two varieties of 'if' statements will end up with the dangling else problem. The construct 'if(E) if (E)S else S' has two derivation trees. It is not clear as to whether the else belongs to the inner 'if' or to the outer 'if'.

The standard and accepted way to resolve the dangling else problem is to allow the else to associate with the nearest if.

09. Ans: (a) & (b)

Sol: The predictive parsing table for the grammar is

	+	i	n	$
S				
A	$A \to +TA$			$S \to \varepsilon$
T		$T \to i$	$T \to n$	

As there is no conflict in the predictive parsing table so the grammar is LL(1).

The LR(0) machine for the grammar is given below.

Scanned with CamScanner

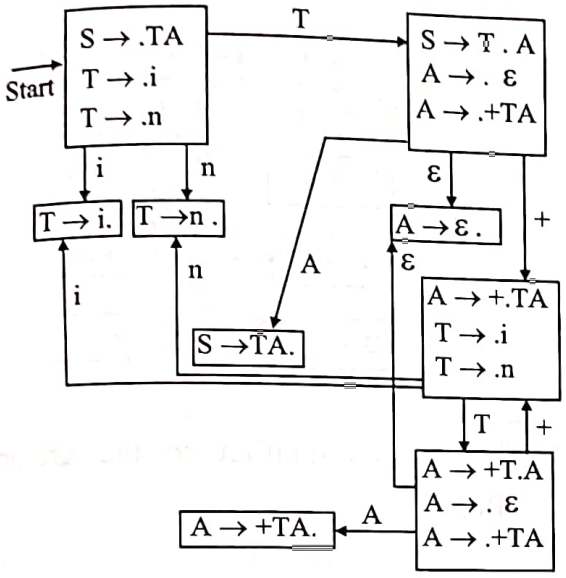

The grammar is LR(0) as there is no inadequate state. Hence the grammar is LALR(1).

10. Ans: (b)

Sol: The grammar is ambiguous

(1) It is not clear as to whether = is left associative or right associative on the sentence 'i = i = i'.

(2) It is not clear as to whether + is left associative or right associative in the sentence 'i + i + i';

(3) The precedence of = & + are not clear in the sentence i = i + i;

So not only have the associativity of the operators to be fixed but also the relative precedence of the operators. Once these are fixed the grammar will be unambiguous.

11. Ans: (a)

Sol: The grammar is trivially a LL(1) grammar & also a LR(0) grammar. Hence it is automatically SLR(1), LALR(1) & LR(1).

12. Ans: (d)

Sol: Consider the LR(0) machine for the grammar.

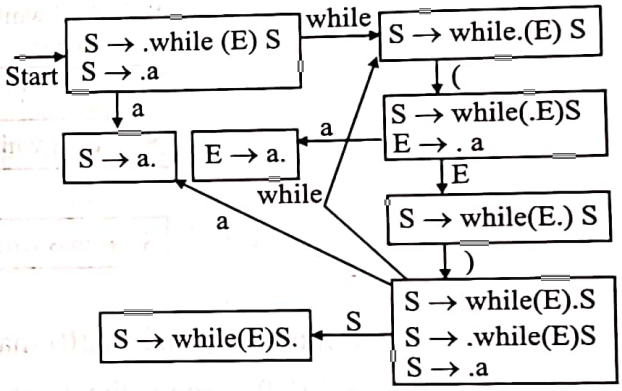

There is no conflict in the LR(0) machine. So the grammar is LR(0). Hence it is automatically SLR(1), LALR(1) & LR(1).

13. Ans: (d)

Sol: The predictive parsing table for the grammar is given below.

	do	while	(	)	a	i	$
S	S → do S while(E)				S → a		
E						E → i	

As there is no conflict in the predictive parsing table the grammar is LL(1). Consider the LR(0) machine for the grammar.

Scanned with CamScanner

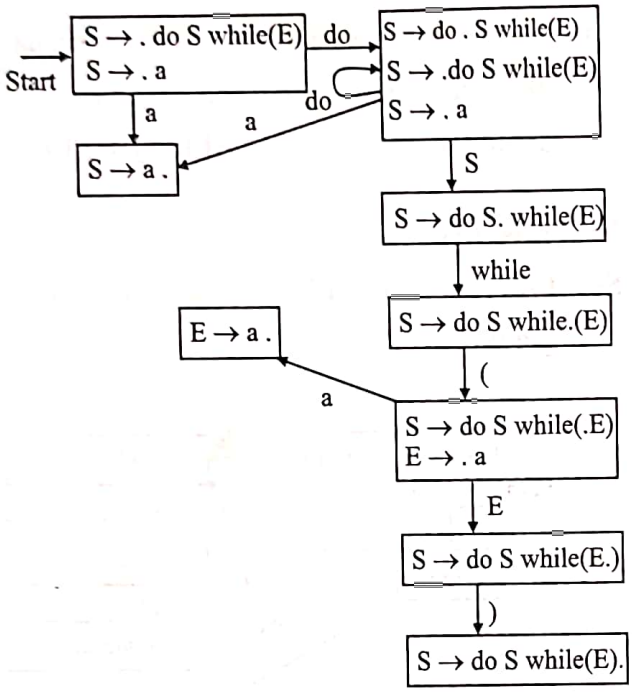

As there is no conflict in the LR(0) machine the grammar is LR(0). Hence the grammar is automatically SLR(1), LALR(1) & LR(1).

14. Ans: (a) & (c)

Sol: Let us construct the predictive parsing table for the grammar.

FOLLOW(S) = {$}

FOLLOW(B) = FOLLOW(S) = {$}

	b	d	$
S	S → bSB		S → ε
B		B → d	B → ε

The grammar is a LL(1) grammar as there is no conflict in the predictive parsing table. Consider the LR(0) machine for the grammar.

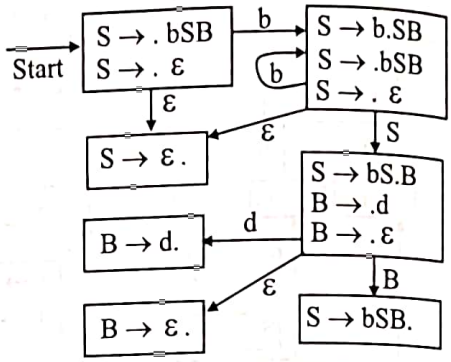

There is no conflict so the grammar is LR(0).

15. Ans: (b)

Sol: Consider the derivation trees

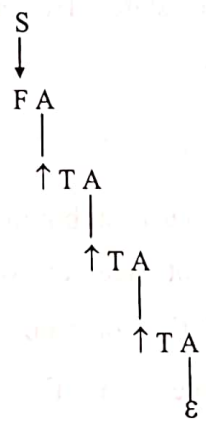

Evidently in a bottom up parser ↑ associates to the right.

16. Ans: (c)

Sol: The predictive parsing table is given below.

	a	b	$	ε
S	S → aAa			S → ε
A	A → abS			A → ε

Because of the conflict in the table the grammar is not LL(1).

Scanned with CamScanner

17. Ans: (c)

Sol: Let us construct the predictive parsing table for the grammar.

FOLLOW(A) = {$}
FOLLOW(B) = {b}
FOLLOW(C) = {d}

The predictive parsing table

	a	b	c	d
A		A → Bb		A → Cd
B	B → aB	B → ε		
C			C → cC	C → ε

So the grammar is LL(1).

18. Ans: (b)

Sol: When we reduce to LALR(1) from CLR(1) no S/R conflicts will arise.

19. Ans: (d)

Sol: Bottom up parsing techniques like shift – reduce parsers simulates the reverse of a rightmost derivation.

20. Ans: (b)

Sol: Synthesized attributes are related to bottom up parsing like the LR techniques.

21. Ans: (b)

Sol: The LR(0) machine follows

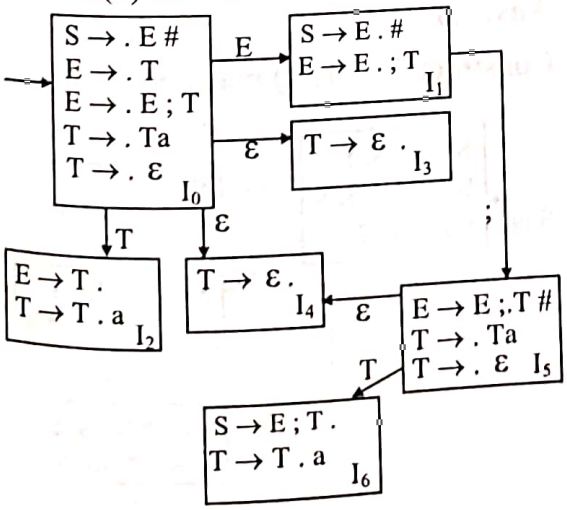

I_2 & I_6 are inadequate states.

22. Ans: (b)

Sol: The LR(0) machine has conflicts.

FOLLOW(S) = {#}

FOLLOW(E) = {; , #, $, a}

The inadequate states can be resolved using the follow symbols. So the grammar is SLR(1) & not LR(0).

23. Ans: (d)

Sol: The grammar is LL(1). The predictive parsing table for the grammar.

	begin	d	Semi	s	$	end
Program	Program→begin d Semi X end					
X			X→d Semi X	X→sY		
Y			Y→Semi sY			Y→ε

24. Ans: (a)

Sol: Let us construct the predictive parsing table for the grammar.

FIRST(S) = FIRST(A)
= FOLLOW(A) = {a, b, $}

FIRST(A) = {a, b, $}

FIRST(B) = {b} ∪ FOLLOW(S)
= {a, b, $}

	a	b	$
S	S → AB	S → AB	S → AB
A	A → Aa	A → ε	A → ε
B	B → ε	B → bB	B → ε

Scanned with CamScanner

25. Ans: (d)

Sol: The language L = $\{ww^R\}$, the language of palindromes is a CFL which is not a DCFL. It cannot have a LL(1) grammar.

26. Ans: (c)

Sol: Consider the LR(1) machine for the grammar

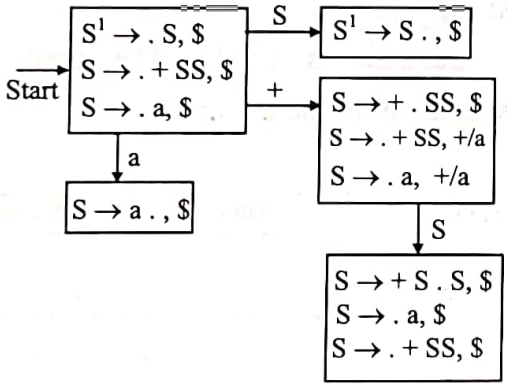

27. Ans: (c)

Sol: The grammar is ambiguous

$S \to \varepsilon$ or $S \to SS$

$\to S\varepsilon$

$\to \varepsilon\varepsilon$

28. Ans: (d)

Sol: The grammar is ambiguous

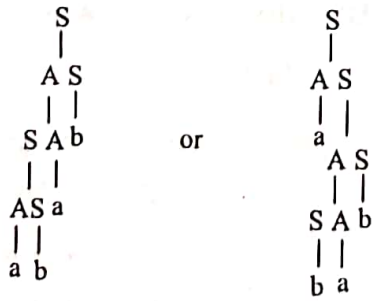

No ambiguous grammar can be LR.

29. Ans: (d)

Sol: Consider the sentence 'xxxxx'

$S \to x\,T\,x \to x\,x\,T\,x\,x$

or $\to x\,x\,x\,x\,x$

$S \to x\,S\,x \to x\,x\,T\,x\,x \to x\,x\,x\,x\,x$

There are two distinct derivations for the sentence 'x x x x x'. So the grammar is ambiguous. No ambiguous grammar can be LR.

30. Ans: (a)

Sol: The LR(0) machine for the grammar is given below.

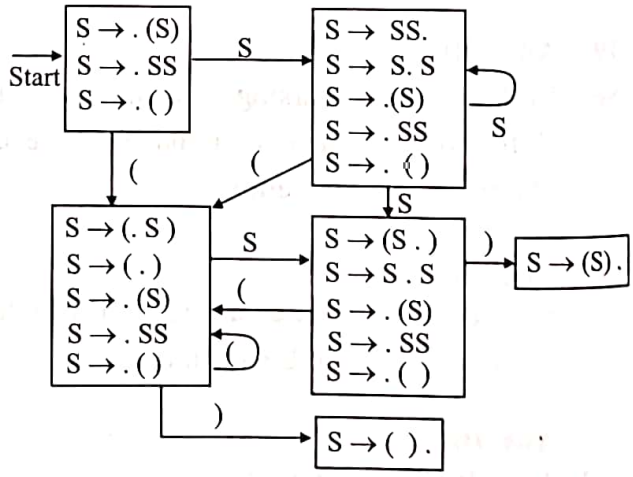

31. Ans: (c)

Sol: Construct the LR(1) machine

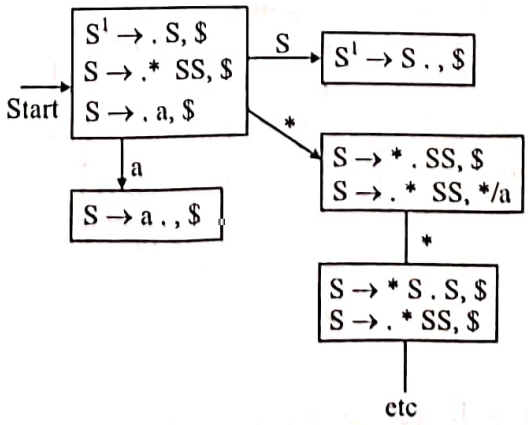

Scanned with CamScanner

32. Ans: (d)

Sol: The grammar is ambiguous.

→ Set A ←

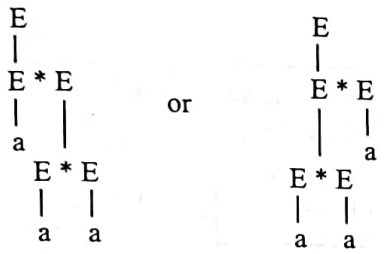

→ Set B ←

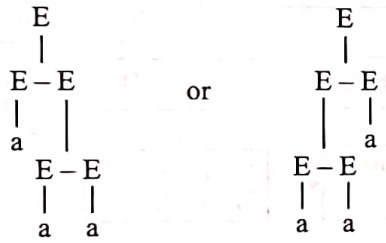

→ Set C ←

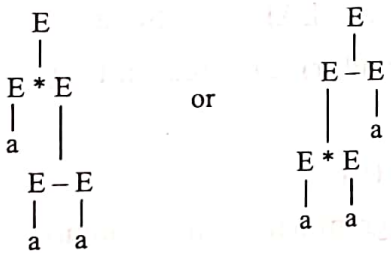

No ambiguous grammar can be LR.

33. Ans: (b)

Sol: The predictive parsing table for the grammar.

	a	c	d	$
A	A →Cd	A → Bd		
B		B → cd		
C	C →ad			

34. Ans: (d)

Sol: The error entries are different one resolves inadequate states by the follow set & one by the lookahead set.

Errors cannot be LALR(1) may escape the attention of SLR(1) parser.

35. Ans: (a)

Sol: The grammar is LL(1). Let us construct the predictive parsing table for the grammar.

	c	d	$
S	S → Cc		
C	C → cC	C → d	

The grammar is LR(0). Consider the LR(0) machine given below.

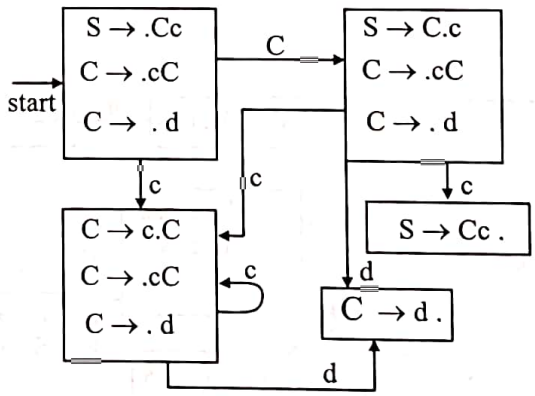

36. Ans: (d)

Sol: The exist grammar that is LL(1) but not LALR(1). Every LL(1) grammar is necessarily LR(1).

37. Ans: (d)

Sol: The resolution of conflicts RR and SR depends on the parsers.

Scanned with CamScanner

38. Ans: (d)

Sol: The LR(0) machine for the grammar

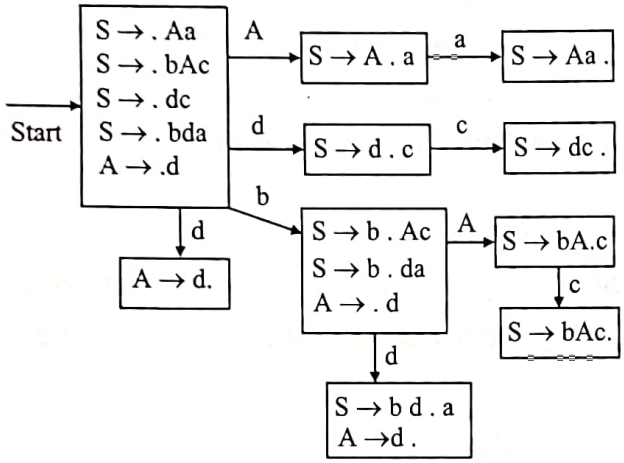

FOLLOW (A) contains a. So this state cannot be resolved by an SLR(1) parser.

Consider the LR(1) machine for the grammar.

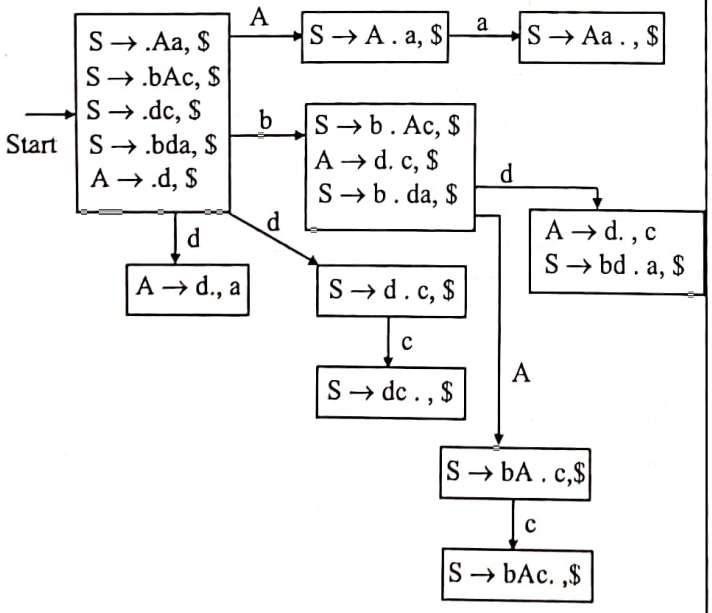

The LR(1) machine is also the LALR(1) machines. So the given grammar is LALR(1) but not SLR(1).

39. Ans: (a)

Sol: Construction of the LR(0) machine for the grammar.

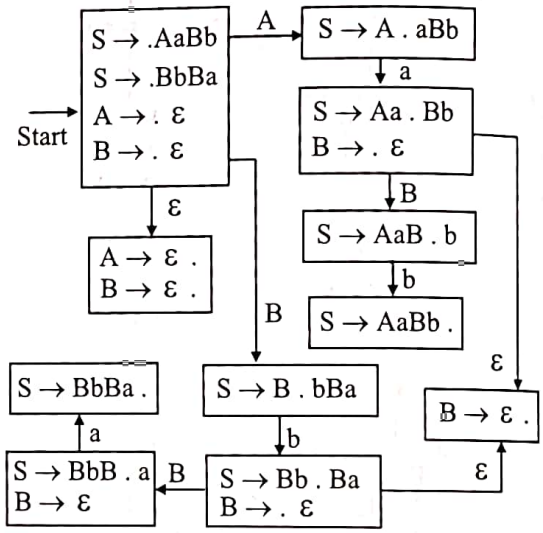

The grammar is not SLR(1). The grammar is however LALR(1). So answer is both are true and (r) is the reason for (a).

40. Ans: (b)

Sol: The grammar is unambiguous & consider the derivation tree

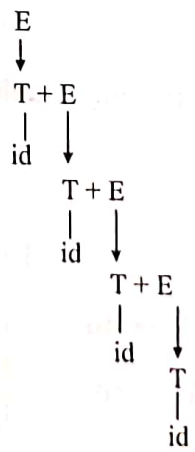

So + is right associative.

Scanned with CamScanner

41. **Ans: (d)**

Sol: Consider the derivation trees

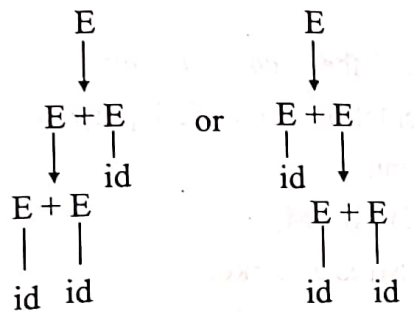

Left associative Right associative

Note that the grammar is ambiguous.

Scanned with CamScanner

Chapter 3 Syntax Directed Translation Schema

01. Consider the SDTS below

$E \rightarrow E + T \mid T$

$T \rightarrow id$

Choose the ***correct*** statement.

(a) + is left associative.

(b) + is right associative.

(c) The grammar is ambiguous.

(d) associativity cannot be associated with +.

02. Choose the ***correct*** statement.

(a) Back patching is a technique used in SDTS to take care of forward references in code generation.

(b) Back patching is used to patch erroneous code.

(c) All back patching can be avoided by a suitable parsing technique.

(d) None of the above.

03. The DISPLAY is used in the compiler with block structured languages to

(a) display the variable names for displaying purposes.

(b) as an unnecessary appendage.

(c) The display replicates the dynamic chain.

(d) the display replicates the static/access chain to speed up the code generation for variables.

04. Choose the ***correct*** intermediate code representation for SDTS purposes for the if statement.

if(E) M_1 SM_2

Where M_1 is a marker

1)

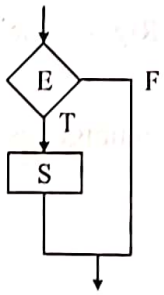

2)

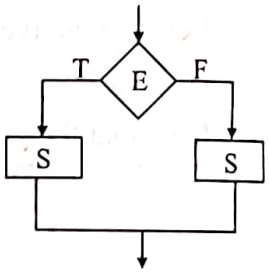

(a) (2) is a correct representation of the if statement.

(b) back patching is required as at M_1 we do not know the extent of S.

(c) Back patching is not required in the if statement.

(d) none of the above.

05. Consider the if-else control structure if(E) S else S. This is modified for SDTS purpose to if(E)$M_1S_1M_2$ else M_3 S_2 M_4.

Where the M's are maker

(1)

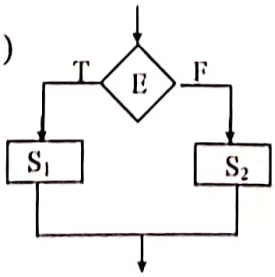

(2)

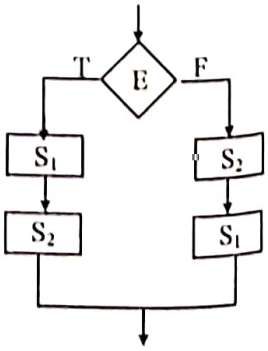

Scanned with CamScanner

Choose the ***correct*** statement.

(a) (2) is a correct representation of the if-else control structure.

(b) Back patching is needed to resolve forward reference when we take the false exist.

(c) Back patching is needed for both the true & false exist.

(d) Back patching can be avoided for the if-else structure.

06. Consider the SDTS for the do-while control structure

do M_1 S while(E) M_2; M_3.

Choose the ***correct*** statement.

(a) Backpatching is needed whenever E evaluates to true.

(b) Backpatching is needed whenever E evaluates to false.

(c) Backpatching is not needed for this control structure as we can record the position M_1 without forward reference.

(d) None of the above.

07. Consider the SDTS for the control structure

While M_1(E) M_2 S M_3

Choose the ***correct*** answer.

(a) This control structure needs backpatching as if E is false we must bypass the execution of S.

(b) This control structure needs backpatching as if E is true we must proceed to S.

(c) Backpatching is not needed for this control structure.

(d) None of the above.

08. Block structures, procedures & recursion can be handled in compiler by

(a) a stack (b) a heap

(c) a queue (d) a dequeue

09. A compile time stacks are used for

(a) Parsing & simulation of execution.

(b) For parsing only.

(c) For parsing, code generation & simulation of execution.

(d) Compile time stacks can be avoided

10. Type checking in HLLs can be described as

(a) A feature that can be handled by regular expressions & finite automata.

(b) By context free grammars & push down automata.

(c) By a context- sensitive language.

(d) Only by a Turing machine.

11. Choose the ***correct*** statement for bounds checking in HLLs.

(a) Bounds checking is very expensive at runtime.

(b) Bounds checking make no difference to a compiler.

(c) Bounds checking is a must in production compiler.

(d) None of the above.

Scanned with CamScanner

Solutions

01. Ans: (a)

Sol: The grammar is unambiguous & for associativity consider the derivation tree

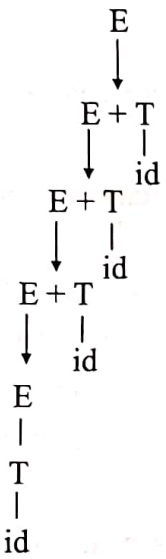

So + is left associative.

02. Ans: (a)

Sol: Back patching is used to generate code for the control structures. Where the flow of control may not be linear at times.

03. Ans: (d)

Sol: To access global variables we have to constantly move along with the links of the static chain.

04. Ans: (b)

Sol: We need Back patching to take care of the case when E evaluates to false, as then we must bypass S.

05. Ans: (b)

Sol: Back patching is needed to take care of the control flow. When the control flow cease to be linear then we need backpatching to resolve forward reference.

06. Ans: (c)

Sol: For this control structure there are no forward references so backpatching is not needed.

07. Ans: (a)

Sol: A jump from M_2 to M_3 is needed when S evaluates to false. This is a case of forward references.

08. Ans: (a)

Sol: The stack data structure works like 'magic' to handle all the features of the HLL mentioned.

09. Ans: (c)

Sol: The parser is a push down automata, block structured languages need a compile time stack & a stack is needed for BURS time code generation.

10. Ans: (c)

Sol: All major HLLs are basically context-sensitive.

11. Ans: (a)

Sol: Bounds checking makes the execution of the final 'exe' file slow and is normally avoided.

Scanned with CamScanner

Chapter 4 Intermediate Code Generation

01. The advantage of translating the source program to an object language format rather than to the machine language of a particular machine
(a) Enables modules developed by different teams in different environments to work on different modules in a software project.
(b) Enables the use of multiple HLLs suited to particular modules.
(c) Enables new compiler to be written or ported.
(d) All of the above

02. A Just In Time (JIT) compiler or a compile & go-compilers are used
(a) To speed up the execution of the program as in JAVA runtime environment.
(b) To speed up the development cycle to cut down testing & designing.
(c) Before converting to a production compiler.
(d) All of the above.

03. Sometimes compiler translates the source program to assembler language
(a) This makes code generation easier as it reuse the interfaces & routines the assembler with the target machine.
(b) It allows using the macro facilities of the assembler.
(c) It tackles the forward referencing problem.
(d) All of the above.

04. Pointer variables are allocated on
(a) the stack
(b) the heap
(c) the queue
(d) the Dqueue

05. Arrays with dynamic bounds are unpopular in HLLs as
(a) The checking of bounds is prohibitively expensive.
(b) Dynamic storage allocation is more expensive than static storage allocation.
(c) More efficient code can be generated.
(d) All of the above.

06. The BURS code generation algorithm basically uses the parsing techniques of
(a) LL(1) grammar
(b) SLR(1) grammar
(c) LR(0) grammar
(d) LALR(1) & LR(1) grammar

07. Optimal code generation for expression even with a single register
(a) is simple
(b) does not have any algorithm for the same
(c) is NP-complete & possibly intractable
(d) none of the above

Scanned with CamScanner

08. Optimal use of registers in code generation
(a) is simple
(b) Has no algorithm for the same
(c) is NP-complete & possibly intractable
(d) None of the above

09. Data flow analysis is normally used
(a) For implementing optimization techniques
(b) For semantic analysis
(c) For syntax analysis
(d) For lexical analysis

10. The following intermediate code form is not normally considered is
(a) 3- address code
(b) 2-address code
(c) 1-address code
(d) 0-address code
(e) actual machine code

Scanned with CamScanner

Solutions

01. **Ans: (a)**

Sol: All the above are needed in production compilers & large software projects.

02. **Ans: (d)**

Sol: For debugging a compiler and go-compiler speeds up the turnaround time.

03. **Ans: (d)**

Sol: Forward references is taken care of, we can translate to macros & reuse the interface to the linkers & loaders.

04. **Ans: (b)**

Sol: Dynamic storage is needed & this comes from the heap.

05. **Ans: (d)**

Sol: Dynamic arrays are very expensive. So, this feature has normally been avoided in HLLs.

06. **Ans: (d)**

Sol: Tree rewriting system to facilitate code generation to machine with complex instruction structure & addressing modes is facilitated by using BURS code generation algorithm which reuse the LR(1) technique.

07. **Ans: (c)**

Sol: Code generation which is optimal is an NP-complete problem.

08. **Ans: (c)**

Sol: Register optimization can be reduced to the standard NP-complete graph coloring algorithm.

09. **Ans: (a)**

Sol: Many optimizations in the intermediate code need data flow analysis techniques.

10. **Ans: (e)**

Sol: The standard intermediate forms are (a)-(d). The aim of the compiler is to result in (e) as the translated code.

Scanned with CamScanner

General Aptitude

Scanned with CamScanner

Chapter 1 Numerical Ability

Numerical Ability

01. Total expenses of a boarding house are partly fixed and partly varying linearly with the number of boarders. The average expense per boarder is Rs. 700 when there are 25 boarders and Rs. 600 when there are 50 boarders. What is the average expense per boarder when there are 100 boarders?

(a) 550 (b) 580
(c) 540 (d) 570

02. If $|r-6| = 11$ and $|2q - 12| = 8$, what is the minimum possible value of $\frac{q}{r}$?

(a) $-\frac{2}{5}$ (b) -2
(c) $\frac{10}{17}$ (d) None of these

03. If $a_1 = 1$ and $a_{n+1} = 2a_n + 5$, $n = 1, 2....$, then a_{100} is equal to

(a) $(5\times2^{99} - 6)$ (b) $(5\times2^{99} + 6)$
(c) $(6 \times 2^{99} + 5)$ (d) $(6 \times 2^{99} - 5)$

04. What is the value of the following expression?

$$\left(\frac{1}{(2^2-1)}\right)+\left(\frac{1}{(4^2-1)}\right)+\left(\frac{1}{(6^2-1)}\right)+....+\left(\frac{1}{(20^2-1)}\right)$$

(a) $\frac{9}{19}$ (b) $\frac{10}{19}$
(c) $\frac{10}{21}$ (d) $\frac{11}{21}$

05. A truck travelling at 70 km/hr uses 30% more diesel to travel a certain distance than it does when it travels at a speed 50 km/hr. If the truck can travel 19.5 km/L of diesel at 50 km/hr, how far can the truck travel on 10 L of diesel at a speed of 70 km/hr?

(a) 130 km (b) 140 km
(c) 150 km (d) 175 km

06. If $x > 2$ and $y > -1$, then which of the following statements is necessarily true?

(a) $xy > -2$ (b) $-x < 2y$
(c) $xy < -2$ (d) $-x > 2y$

07. If $x > 5$ and $y < -1$, then which of the following statements is true?

(a) $(x + 4y) > 1$ (b) $x > -4y$
(c) $-4x < 5y$ (d) None of these

08. Every 10 years the Indian Government counts all the people living in the country. Suppose that the director of the census has reported the following data on two neighboring villages Chota Hazri and Mota Hazri.

Scanned with CamScanner

(i) Chota Hazri has 4,522 fewer males than Mota Hazri.

(ii) Mota Hazri has 4,020 more females than males.

(iii) Chota Hazri has twice as many females as males.

(iv) Chota Hazri has 2,910 fewer females than Mota Hazri.

What is the total number of males in Chota Hazri?

(a) 11,264 (b) 14,174

(c) 5,632 (d) 10,154

09. Three classes X, Y and Z take an algebra test.

The average score in class X is 83.

The average score in class Y is 76.

The average score in class Z is 85.

The average score of all students in classes X and Y together is 79.

The average score of all students in classes Y and Z together is 81.

What is the average for all the three classes?

(a) 81 (b) 81.5

(c) 82 (d) 84.5

10. At a certain fast food restaurant, Brian can buy 3 burgers, 7 shakes, and one order of fries for Rs. 120 exactly. At the same place it would cost Rs. 164.5 for 4 burgers, 10 shakes, and one order of fries. How much would it cost for an ordinary meal of one burger, one shake, and one order of fries?

(a) Rs. 31 (b) Rs. 41

(c) Rs. 21 (d) Cannot be determined

11. A telecom service provider engages male and female operators for answering 1000 calls per day. A male operator can handle 40 calls per day whereas a female operator can handle 50 calls per day. The male and the female operators get a fixed wage of Rs. 250 and Rs. 300 per day respectively. In addition, a male operator gets Rs. 15 per call he answers and female operator gets Rs. 10 per call she answers. To minimize the total cost, how many male operators should the service provider employ assuming he has to employ more than 7 or the 12 female operators available for the job?

(a) 9 (b) 11 (c) 12 (d) 10

12. A student took five papers in an examination, where the full marks were the same for each paper. His marks in these papers were in the proportion of 6:7:8:9:10. In all papers together, the candidate obtained 60% of the total marks. Then the number of papers in which he got more than 50% marks is

(a) 2 (b) 3 (c) 4 (d) 5

13. A can complete a piece of work in 4 days. B takes double the time taken by A, C takes double that of B, and D takes double that of C to complete the same task. They are paired in groups of two each. One pair takes two–thirds the time needed by the second pair to complete the work. Which is the first pair?

(a) A and B (b) A and C

(c) B and C (d) A and D

Scanned with CamScanner

14. A college has raised 75% of the amount it needs for a new building by receiving an average donation of Rs. 600 from the people already solicited. The people already solicited represent 60% of the people the college will ask for donations. If the college is to raise exactly the amount needed for the new building, what should be the average donation from the remaining people to be solicited?
(a) Rs. 300 (b) Rs. 250
(c) Rs. 400 (d) Rs. 500

15. At his usual Rowing rate. Rahul can travel 12 miles downstream in a certain river in 6 hr less than it takes him to travel the same distance upstream. But if he could double his usual rowing rate for this 24 miles round trip, the downstream 12 miles would then take only 1 hr less than the upstream 12 miles. What is the speed of the current in miles per hour?
(a) $\frac{7}{3}$ (b) $\frac{4}{3}$ (c) $\frac{5}{3}$ (d) $\frac{8}{3}$

16. Shyama and Vyom walk up an escalator (moving stairway). The escalator moves at a constant speed. Shyama takes three steps for every two of Vyom's steps. Shyama gets to the top of the escalator after having taken 25 steps, while Vyom (because his slower pace lets the escalator do a little more of the work) takes only 20 steps to reach the top. If the escalator were turned off, how many steps would they have to take to walk up?
(a) 40 (b) 50 (c) 60 (d) 80

17. The owner of an art shop conducts his business in the following manner: every once in a while he raises his prices by X%, then a while later he reduces all the new prices X%. After one such up-down cycle, the price of a painting decreased by Rs.441. After a second up-down cycle the painting was sold for Rs. 1,944.81. What was the original price of the painting?
(a) Rs. 2,756.25 (b) Rs. 2, 256.25
(c) Rs. 2,500 (d) Rs. 2,000

18. The owner of a local jewellery store hired three watchmen to guard his diamonds, but a thief still got in and stole some diamonds. On the way out, the thief met each watchman, one at a time. To each he gave $\frac{1}{2}$ of the diamonds he had then, and 2 more besides. He escaped with one diamond. How many did he steal originally?
(a) 40 (b) 36 (c) 25 (d) None of these

19. Shyam visited Ram during his brief vacation. In the mornings they both would go for yoga. In the evening they would play tennis. To have more fun, they indulge only in one activity per day, i.e. either they went for yoga or played tennis each day. There were days when they were lazy and stayed home all day long. There were 24 mornings when they did nothing, 14 evenings when they stayed at home, and a total of 22 days when they did yoga or played tennis. For how many days Shyam stayed with Ram?
(a) 32 (b) 24 (c) 30 (d) None of these

Scanned with CamScanner

20. A car rental agency has the following terms. If a car is rented for 5 hrs or less, then, the charge is Rs. 60 per hour or Rs. 12 per kilometer whichever is more. On the other hand, if the car is rented for more than 5 hrs, the charge is Rs. 50 per hour or Rs. 7.50 per kilometer whichever is more. Akil rented a car from this agency, drove it for 30 km and ended up paying Rs. 300. For how many hours did he rent the car?

(a) 4 hrs (b) 5 hrs
(c) 6 hrs (d) None of these

21. At a bookstore, 'MODERN BOOK STORE' is flashed using neon lights. The words are individually flashed at the intervals of $2\frac{1}{2}$s, $4\frac{1}{4}$s and $5\frac{1}{8}$s respectively, and each word is put off after a second. The least time after which the full name of the bookstore can be read again is

(a) 49.5 s (b) 73.5 s
(c) 1744.5 s (d) 855 s

22. Three pieces of cakes of weights $4\frac{1}{2}lb, 6\frac{3}{4}lb$ and $7\frac{1}{5}lb$ respectively are to be divided into parts of equal weight. Further, each part must be as heavy as possible. If one such part is served to each guest, then what is the maximum number of guests that could be entertained?

(a) 54 (b) 72
(c) 20 (d) None of these

23. It takes six technicians a total of 10 hrs to build a new server from direct Computer, with each working at the same rate. If six technicians start to build the server at 11 AM, and one technician per hour is added beginning at 5 PM, at what time will the server be completed?

(a) 6.40 PM (b) 7 PM
(c) 7.20 PM (d) 8 PM

24. In Nuts And Bolts factory, one machine produces only nuts at the rate of 100 nuts per minute and needs to be cleaned for 5 minutes after production of every 1000 nuts. Another machine produces only bolts at the rate of 75 bolts per minute and needs to be cleaned for 10 minutes after production of every 1500 bolts. If both the machines start production at the same time, what is the minimum duration required for producing 9000 pairs of nuts and bolts?

(a) 130 minutes (b) 135 minutes
(c) 170 minutes (d) 180 minutes

25. The number of prime factors of the expression $6^{10} \times 7^{17} \times 11^{27}$ is

(a) 54 (b) 64
(c) 71 (d) 81

26. The units place digit in $7^{17} \times 6^{63} \times 3^{65}$ is

(a) 1 (b) 2
(c) 3 (d) 4

Scanned with CamScanner

27. The largest among the numbers

$\sqrt{7}-\sqrt{5},\ \sqrt{5}-\sqrt{3},\ \sqrt{9}-\sqrt{7},\ \sqrt{11}-\sqrt{9}$

(a) $\sqrt{7}-\sqrt{5}$ (b) $\sqrt{5}-\sqrt{3}$

(c) $\sqrt{9}-\sqrt{7}$ (d) $\sqrt{11}-\sqrt{9}$

28. p and q are positive numbers such that $p^q = q^p$ and $q = 9p$ the value of p is

(a) $\sqrt{9}$ (b) $\sqrt[6]{9}$

(c) $\sqrt[9]{9}$ (d) $\sqrt[8]{9}$

29. The LCM of two numbers is 44 times of their HCF. The sum of the LCM and HCF is 1125. If one number is 25 the other number is

(a) 1100 (b) 975

(c) 900 (d) 800

30. The HCF and LCM of two numbers are 12 and 924 respectively. Then the number of such pairs is

(a) 0 (b) 1 (c) 2 (d) 3

31. $1+\cfrac{1}{1+\cfrac{1}{1+\cfrac{1}{1+\cfrac{1}{1+\cfrac{2}{3}}}}}$

(a) $\frac{21}{13}$ (b) $\frac{17}{3}$

(c) $\frac{34}{21}$ (d) $\frac{8}{5}$

32. If 50% of (p – q) = 30% of (p + q) then p:q is

(a) 5:3 (b) 4:1

(c) 3:5 (d) 1:4

33. A's income is 10% more than B's income by how much percent is B's income less than that of A

(a) $11\frac{1}{9}\%$ (b) $9\frac{1}{11}\%$

(c) 10% (d) 9%

34. Price of a commodity has in used by 60% by what percent must a consumer reduce the consumption of the commodity so as not to increase the expenditure?

(a) 37% (b) 37.5%

(c) 40.5% (d) 60%

35. A person bought 50 pens for Rs. 50 each. He sold 40 of ten at a loss of 5%. He wants to gain 10% of the whole. Then his gain percent on the remaining pens should be

(a) 15% (b) 40%

(c) 50% (d) 70%

36. A fruit seller buys 'x' guavas for Rs. 'y' and sells 'y' guavas for Rs. 'x'. If x>y then he made

(a) $\frac{x^2-y^2}{xy}$%loss (b) $\frac{x^2-y^2}{xy}$%gain

(c) $\frac{x^2-y^2}{xy}$%loss (d) $\frac{x^2-y^2}{xy}$%gain

Scanned with CamScanner

37. By selling 60 articles a vendor gains the selling price of 15 articles his gain percentage is

(a) 25% (b) $33\frac{1}{3}\%$

(c) 20% (d) $28\frac{4}{7}\%$

38. The cost price of 12 items is equal to the selling price of 9 items then gain percentage is

(a) 25% (b) $33\frac{1}{3}\%$

(c) 30% (d) 67.7%

39. A shopkeeper marked the price 10% more than its cost price. If he allows a discount of 20% then his loss percent is

(a) 8% (b) 10%

(c) 12% (d) 16%

40. An amount will be thrice in 20 years at a rate of simple interest. At the same rate of interest time taken to become twice of itself

(a) 15 (b) 10 (c) 12 (d) 16

41. The annual payment what will discharge a debt of Rs. 770 due in 5 years at the rate of interest 5% per annum (SI method) is ____

42. The compound interest on Rs 8000 at 20% per annum for 9 months compounded quarterly is

(a) 1261 (b) 1250

(c) 1270 (d) 1258

43. The average of the first 100 positive integers is

(a) 100 (b) 51 (c) 50.5 (d) 49.5

44. Ram and Shyam and hari enter into a partnership and their capitals are in the proportion of $\frac{1}{3}:\frac{1}{4}:\frac{1}{5}$ Ram withdraws half his capital at the end of 4 months out of total annual profit of Rs 847, Ram's share is ____

(a) 315 (b) 252 (c) 280 (d) 412

45. Before 7 years the ratio of ages of A and B was 3 : 4. After 9 years if the ratio of their ages will be 7:8, the present age of B will be

(a) 16 (b) 19 (c) 28 (d) 23

46. The fourth proportion of 6, 11 and 12 is

(a) 29 (b) 23 (c) 72 (d) 22

47. If $\frac{a}{b}=\frac{c}{d}=\frac{e}{f}=3$, then $\frac{2a^2+3c^2+4e^2}{2b^2+3d^2+4f^2}$

(a) 2 (b) 3 (c) 4 (d) 9

48. In an examination 80% boys and 70% girls passed out of 1200 students. If 75% students passed in over all other the number of boys appeared in exam is

(a) 520 (b) 580 (c) 600 (d) 620

49. A, B and C completed a work costing Rs 1800. A worked per 6 days , B worked per 4 days and C worked per 9 days. If their daily wages are in the ratio 5:6:4 then how much amount will be received by 'A'

(a) 600 (b) 500 (c) 900 (d) 450

Scanned with CamScanner

Reasoning

50. For this question, you have to base your conclusion on the three premises (viz: a, b and c). Identify the correct answer form amongst the options given to you:

Statements

a. Some cakes are bikes

b. Some bikes are hills

c. All laptops are bikes

Conclusions

I. All laptops are hills

II. Some laptops are cakes

III. Some cakes are hills

IV. Some laptops are not cakes

(a) Only I follows

(b) Only either II or IV follows

(c) Only I or II follows

(d) Only I and IV follows

(e) None of these

51. (A) No hyenas laugh. some who laugh are lions. some lions are not hyenas.

(B) All ghosts are red. Some ghosts do not dance. Some dancers are not red.

(C) Australians indulge in swearing. Those who swear are fined. Some who are fined are not Australians.

(D) Some Europeans are Spanish. All Europeans are British. Some British are Spanish.

(a) A and B (b) C only

(c) A and D (d) D only

52. (A) All Pakistanis are brave. All baskets are Pakistanis: all brave are baskets.

(B) No golfers are Asian. All golfers are athletic. Some Asians are athletic.

(C) All burgers are chips. some refreshments are burgers. Some refreshments are chips.

(D) Some bowlers are fast. All bowlers are spinners. some spinners are fast.

(a) C and D (b) B and C

(c) A only (d) C only

Directions for the following questions

In the each of the questions given two statements followed by two conclusion numbered I and II. You have to take the two given statements as true even if they seem to be at variance with commonly known facts. Read all the conclusions and then decide which of the given conclusions logically follows from the given statements, disregarding commonly known facts

Give answers

(a) if only conclusion I follows.

(b) if only conclusion II follows.

(c) if either I or II follows

(d) if neither I nor II follows.

(e) if both follow.

53. **Statements:**

(A) All cats are dogs

(B) All dogs are brown.

Conclusions:

I. All cats are brown.

II. All brown are dogs.

Scanned with CamScanner

54. **Statements:**
(A) All computers are Pentiums.
(B) Some Pentiums are machines.
Conclusions:
I. Some computers are machines.
II. Some machines are computers.

55. **Statements:**
(A) Some apples are fruit.
(B) Some fruits are sour.
Conclusions:
I. Some apples are sour.
II. Some sours are fruit.

56. **Statements:**
(A) some rods are sticks.
(B) Some scales are rods.
Conclusions:
I. Some sticks are rods.
II. some scales are sticks.

57. **Statements:**
(A) Some apples are flowers
(B) No flower is a papaya.
(C) All papayas are baskets
Conclusions:
I. Some apples are baskets.
II. Some baskets are papayas.
III. Some baskets are apples.
IV. Some flowers are apples.

(a) All follows
(b) None follows
(c) Only II and IV follow
(d) Only II and III follow
(e) None of these

58. **Statements:**
(A) Some cars are horses.
(B) All horses are guns.
(C) All guns are cows.
Conclusions:
I. some cows are cars.
II. Some cows are horses.
III. Some cows are guns.
IV. Some cars are guns.

(a) None followings
(b) Only I and II follow
(c) Only II and II follow
(d) Only III and IV follow
(e) All follows

59. **Statements:**
(A) Some desks are apartments.
(B) All apartments are cars.
(C) Some cars are trucks.
Conclusions:
I. Some desks are trucks
II. Some desks are cars.
III. Some cars are apartments.
IV. No trucks is a desk.

(a) None follows
(b) Only II and III follow
(c) Either I or IV, II and III follows
(d) Either only I or IV follow
(e) All follow

Scanned with CamScanner

60. **Statements:**

(A) All stairs are lifts.

(B) No lift is an escalator.

(C) Some escalators are helicopters.

(D) Some lifts are planes.

Conclusions:

I. No stairs is an escalator.

II. some helicopters are not escalators.

III. Some stairs are planes.

IV. Some helicopters are escalators

(a) Only I and either II or IV follow

(b) Only I and IV follow

(c) Either II or IV follow

(d) Only I, III or IV follows

(e) None of these.

61. **Statements:**

(A) All bulls are bells.

(B) Some bulls are cows.

(C) Some bells are chairs.

Conclusions:

I. Some cows are chairs.

II. Some bells are bulls.

III. All bells are cow.

IV. All bells are bulls.

(a) All follow

(b) None follows

(c) Only II follow

(d) Only II and III follow

(e) None of these.

62. Introducing a boy, Ralf said "His mother is the only daughter of my mother-in-law." How is Ralf related to the boy?

(a) Uncle (b) Father

(c) Brother (d) Husband

63. Pointing to a man in a photograph, a woman said, "His brother's father is the only son (and child) of my grandfather." How is the woman related to the man in the photograph?

(a) Mother (b) Sister

(c) Aunt (d) Daughter

64. 'X + Y' means 'X is the father of Y', 'X-Y' means 'X is the wife of Y', 'X × Y' means 'X is the brother of Y', 'X ÷ Y' means, 'X is the mother of Y' and 'X = Y' means 'X is the sister of Y'. On the basis of this information, what does X + Y – Z mean ?

(a) X is the father-in-law of Z

(b) Z is the father of X

(c) Z is the neice of X

(d) X is the brother of Z

65. Pointing towards a lady in a Polaroid, Victor said, "She is the daughter of the father of the sister of my brother". How is the lady in photograph related to Victor?

(a) Daughter

(b) Wife

(c) Mother

(d) None of these

Scanned with CamScanner

Directions for questions 66 to 67

Study the following information carefully and answer the questions given below.

Raina, Murli, Haiden, Patel, Gony, Balaji and Morkel are seven members in a family, out of which there are three females and four males. There are two managers, two lawyers, one teacher, one engineer and one doctor. No lady is either a teacher or an engineer. Haiden is a lawyer and is married to Raina, who is a teacher. Balaji, the engineer, is married to patel, who is neither a lawyer nor a doctor. No two ladies have the same profession. Murli is the sister of Morkel, who is a manager.

66. What is Gony's profession?
(a) Manager
(b) Lawyer
(c) Manager or Lawyer
(d) Data inadequate

67. Which of the following is the group of males?
(a) Raina, Murli, Balaji and Morkel
(b) Gony, Balaji, Patel and Morkel
(c) Raina, Haiden, Gony and Balaji
(d) Raina, Gony, Balaji and Morkel

68. Jack runs 10m south from his flat, turns left and walks 23m, again turns left and walks 40m, then turns right and walks 5m to reach his office. In which direction is the office from his house?
(a) East (b) Northeast
(c) Southwest (d) North

69. Two cars start from the opposite points of straight part of the National Highway 8, 100 km apart. The first car runs for 20 km. It then takes a detour takes a right turn goes straight for 15 km. It then turns left, runs for another 25 km and then takes the straight connecting road to reach back on the main road. In the meantime, due to a minor breakdown, the other car has run only 35 km along the main road. What would be the distance between the two cars at this point?
(a) 20 km (b) 30 km
(c) 45 km (d) 10 km

70. A messenger was returning to his base station which was in front of him to the north. When this base station was 100 m away form him, he turned to the left and moved 50 m to deliver the last message to the Peshwa's troops. He then moved in the same direction for 40 m, turned to his right and moved 100 m. How many meters away he was now form his base station?
(a) 0 (b) 150 (c) 90 (d) 100

Directions for questions 71 to 73

Read the situation given below to answer the question.

j, k, *l*, m, n, o, p, q and r are nine buts. *l* is 2 km east of k. j is 1 km north of k and q is 2 km south of j. p is 1 km west of q while m is 3 km east of p and o is 2 km north of p. r is situated just in middle of k and *l* while n is just in middle of q and m.

Scanned with CamScanner

71. Then distance between k and *l* is:
(a) 2 km (b) 1 km
(c) 5 km (d) 1.5 km

72. Distance between k and r is:
(a) 1.41 km (b) 3 km
(c) 2 km (d) 1 km

73. Distance between p and q is:
(a) 4 km (b) 2 km
(c) 1 km (d) 3 km

74. A man walks 5 meters straight and then 10 meters to the right. After this he continuously turns left and every time walks 10,5 and 10 meters respectively. How far is he now from his starting point?
(a) $5\sqrt{3}$ meters (b) $3\sqrt{5}$ meters
(c) $5\sqrt{2}$ meters (d) 10 meters

75. Karan's house is south facing From the front door of his house Karan started walking and after walking 20 meters straight he turned to his left and walked 50 meters. After this he turned to his right and walked 80 meters. Find the distance between the point from where he finished his walk and the door of his house.
(a) $50\sqrt{5}$ meters (b) $5\sqrt{50}$ meters
(c) 100 meters (d) 120 meters

76. At a crossing there was a direction pole, which was showing all the four directions in correct manner. But due to wind it turns in such a manner that now west pointer is showing South. A man went to the wrong direction thinking that he was traveling East. In which direction he was actually traveling?
(a) South (b) West
(c) North (d) Can't say

Directions for questions 77 to 78

Alok starts walking from his school towards his house as shown in the figure here. He starts form the front gate of his school, walks 5 km, turns left, walks 2km, then turns left again and walks 4 kms, then he turns to his right and walks 3 km and then turns left, walks 1 km and then turns to his left again to walk 4 km and then to his right and walks 10 km and finally turns right, walks 3 km and thus reaches the front gate of his house.

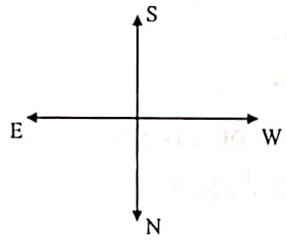

77. If Alok's house is southfacing, in which direction did he start walking?
(a) West (b) North
(c) South (d) None of these

78. Alok's house is in which direction with respect to his school?
(a) Northwest
(b) Southwest
(c) South
(d) Cannot be determined

Scanned with CamScanner

Directions for questions 79 to 81

In the following question there is a statement followed by two conclusions. You have to choose:

(a) If only conclusion I follows.
(b) If only conclusion II follows.
(c) If conclusion I and II both follow.
(d) If neither I nor II follows.

79. **Statement:**
What is an RDX explosive? From the outside it looks like a simple harmless object, but its real contents are so deadly that they are sufficient to blast off an entire compartment of a train or even a plane.
Conclusion:
I. The RDX explosive can cause massive destruction by killing a number of persons with a single explosion.
II. The RDX explosive is only used to blast planes/trains as it is difficult to recognize in each settings.

80. **Statement:**
Don't park here. If you violate this no-parking sign, a penalty of Rs. 5000 will be charged.
Conclusions:
I. The same penalty is charged for every wrong parking offence.
II. The warning is written outside all non-parking zones.

81. **Statement:**
Whenever there is a match between India and Pakistan, Mr. Sahai takes leave form his office. Mr. Sahai is in office today.
Conclusion:
I. Today there is no match between India and Pakistan.
II. Mr. Shai always goes to his office except on India-Pakistan match days.

82. Raju is seventh from left and Rohan is ninth from right. if there are six students between them then how many students in a row ?
(a) 8 (b) 12
(c) 22 (d) 21

83. Sanjay is twelth from the top and ashok is twenty-fifth from the bottom if there are 8 students between them, then how many students in the row?
(a) 27 (b) 45
(c) 42 (d) can't be determined

84. Ram is eighth from left he is fourth to the left of shyam who is eighth from right. Then how many students in a row?
(a) 12 (b) 21 (c) 24 (d) 19

85. Ram is seventh to the left of shyam who is thirty first from left in the row 50 students then what will be the Ram's position from right ?
(a) 27 (b) 26
(c) 29 (d) 28

Scanned with CamScanner

86. Amit is seventeenth from left and Sumit is fourteenth from right in the row of 50 students and Ankit is sitting just exactly in between them. Then what will be Ankit's position from right end ?

(a) 14 (b) 19
(c) 13 (d) None of these

87. Anuj is fourteenth from left and Raj is eighteenth from right, when they interchange their postions respectively. Then Anuj becomes twenty-third from left. what will be Raj's position from right after interchanging ?

(a) 25 (b) 26
(c) 27 (d) 28

88. Jai is twenty – first from left and Vijay is twenty fourth from right. When they interchange their position respectively. Then vijay becomes thirty – fist from right end. Then what will be Jai's position from left after interchanging?

(a) 25 (b) 26
(c) 27 (d) 28

89. Raju is twenty-eight from left and Ram is thirty sixth from right when they interchange their position respectively, then Ram becomes twenty-eight from right. Then what will be Raju's position from left after interchanging their position?

(a) 20 (b) 19
(c) 21 (d) 22

Directions for questions 90 to 91

Study the following sitting arrangement carefully and answer the given questions

P, Q, R, S, T, U,V and W are sitting around the circle and are facing the centre.

(1) P is second to the right of T who is the neighbor of R and V.
(2) S is not the neighbor of P
(3) V is the neighbor of U
(4) W is sitting between U and S.

90. Which two of the following are not neighbors?

(a) RV (b) UV
(c) RP (d) QS

91. Who is an immediate right of V?

(a) P (b) U
(c) R (d) T

Directions for questions 92 to 93

Study the following sitting arrangement carefully and answer the given question.

Six friends are sitting in a circle facing the centre. Deepa is sitting between Prakash and Pankaj. Priti is between Sukesh and Lalit. Prakash and Sukesh are opposite to each other.

92. Who is sitting opposite to prakash?

(a) Sukesh (b) Deepa
(c) Pankaj (d) Lalit

Scanned with CamScanner

93. Who is just right to Pankaj?
(a) Deepa (b) Lalit
(c) Prakash (d) Can't be determined

Directions for questions 94 to 95

Study the following sitting arrangement carefully and answer the given questions.

V, U and T are seated in a circle facing the centre A, B and C are also seated in the same circle but two of them are not facing at the centre (facing opposite direction to the centre). V is second to the left of C. U is second to the right of A. B is third to the left of T. C is second to the right of T. A is seated next to V.

94. Which of the following are not facing the centre?
(a) BA
(b) CA
(c) BC
(d) Can't be determined
(e) None of these

95. Which of the following is T's position with respect of B?
(a) Third to the right
(b) Second to the right
(c) Third to the left
(d) Immediate left
(e) None of these

Directions for questions 96 to 97

Study the following sitting arrangement carefully and answer the given questions.

(1) A,B,C,D and E are five men are sitting in a line facing to south-while M,N,O,P and Q are five ladies sitting in a second line parallel to the first line and re facing to north.
(2) B who is just next to the left of D, is opposite to Q.
(3) C and N are diagonally opposite to each other.
(4) E is opposite to O who is just next right of M.
(5) P who is just to the left of Q, is opposite to D.
(6) M is at one end of the line.

96. Who is sitting third to the right of O?
(a) Q (b) N
(c) Data inadequate (d) None of these

97. If B shifts to the place of E, E shifts to the place of Q, and Q shifts to the place of B, then who will be the second to the left of the person opposite to O?
(a) Q (b) P (c) E (d) D

98. Deepak walks 9m towards south then he turns to his right and moved 5m. Then he turns to his right and travels another 4m. At last he turns to his left and moves 7m. Then how far is he from starting point and in which direction?
(a) 15m south west (b) 7m south west
(c) 15m north west (d) 13m south west

Scanned with CamScanner

Solutions

01. Ans: (a)

Sol: Let x be the fixed cost and y be the variable cost

17500 = x + 25y -------- (i)

30000 = x + 50y -------- (ii)

Solving the equation (i) and (ii), we get

x = 5000, y = 500

Now if the average expense of 100 boarders be 'A'.

Then 100 × A = 5000 + 500 × 100

∴ A = 550.

02. Ans: (b)

Sol: $|r-6| = 11 \Rightarrow r-6 = 11, r = 17$

or $-(r-6) = 11, r = -5$

$|2q-12| = 8 \Rightarrow 2q-12 = 8, q = 10$

or $2q-12 = -8, q = 2$

Hence, minimum value of $\frac{q}{r} = -2$

03. Ans: (d)

Sol: $a_1 = 1, a_2 = 7, a_3 = 19, a_4 = 43$

The difference between successive terms is in series 6, 12, 24, 48,.... i.e. they are in GP. Hence

$$a_{100} = a_1 + a\left(\frac{r^n - 1}{r-1}\right) = 1 + 6\frac{(2^{99}-1)}{(2-1)}$$

$$= 6 \times 2^{99} - 5$$

04. Ans: (c)

Sol: $\frac{1}{1.3} + \frac{1}{3.5} + \frac{1}{5.7} + ... + \frac{1}{19.21}$

$$= \frac{1}{2}\left(1 - \frac{1}{3}\right) + \frac{1}{2}\left(\frac{1}{3} - \frac{1}{5}\right) + \frac{1}{2}\left(\frac{1}{5} - \frac{1}{7}\right) + ... \frac{1}{2}\left(\frac{1}{19} - \frac{1}{21}\right)$$

$$= \frac{1}{2} - \frac{1}{42} = \frac{(21-1)}{42} = \frac{20}{42} = \frac{10}{21}$$

05. Ans: (c)

Sol: The vehicle travels 19.5 km/L at the rate of 50 km/hr. So it should travel $\frac{19.5}{1.3} km/L$ at the rate of 70 km/hr = 15 km/L.

The distance covered at 70 km/hr with 10 L

= 10 × 15 = 150 km

06. Ans: (b)

Sol: Use choices. The answer is (b), because $-x < -2$ and $-2 < 2y \Rightarrow -x < 2y$.

07. Ans: (d)

Sol: $x > 5, y < -1$

Use answer choices.

Take x = 6, y = – 6. we see none of the statements (1, 2 and 3) is true. Hence the correct option is (d).

08. Ans: (c)

Sol: Let 'x' be the number of males in Mota Hazri.

	Chota Hazri	Mota Hazri
Males	x – 4522	x
Females	2(x – 4522)	x + 4020

$x + 4020 - 2(x - 4522) = 2910 \Rightarrow x = 10154$

∴ Number of males in Chota Hazri

= 10154 – 4522 = 5632

Scanned with CamScanner

09. **Ans: (b)**

Sol: Let the number of students in classes X, Y and Z be a, b and c respectively. Then

Total score of X = 83a

Total score of Y = 76b

Total score of Z = 85c

And $\frac{83a+76b}{a+b}=79$, i.e. 4a = 3b

And $\frac{76b+85c}{b+c}=81$, i.e. 4c = 5b

Hence, $b=\frac{4}{3}a$, $c=\frac{5}{4}b=\frac{5}{4}\times\frac{4}{3}a=\frac{5}{3}a$

Average of X, Y and Z $=\frac{83a+76b+85c}{a+b+c}$

$$=\frac{83a+76\times\frac{4}{3}a+85\times\frac{5}{3}a}{a+\frac{4}{3}a+\frac{5}{3}a}=\frac{978}{12}=81.5$$

10. **Ans: (a)**

Sol: Let the cost of 1 burger, 1 shake and 1 fries be x, y and z.

Then

3x+7y+z = 120 ----------(i)

4x+10y+z = 164.5 -------(ii)

x + 3y = 44.5 -------(iii) (ii – i)

Multiplying (iii) by 4 and subtracting (ii) from it, we find

2y – z = 13.5 ----------(iv)

Subtracting (iv) from (iii),

we get x + y + z = 31.

11. **Ans: (d)**

Sol: There are two equations to be formed

40 m + 50 f = 1000

250 m + 300 f + 40 × 15 m + 50×10×f = A

850 m + 8000 f = A

m and f are the number of males and females, A is amount paid by the employer.

Then the possible values of

f = 8, 9, 10, 11, 12

If f = 8

M = 15

If f = 9, 10, 11 then m will not be an integer while f = 12 then m will be 10.

By putting f = 8 and m = 15, A = 18800.

When f = 12 and m = 10 then A = 18100.

Therefore the number of males will be 10.

12. **Ans: (c)**

Sol: Let the marks scored in five subjects be 6x, 7x, 8x, 9x and 10x (on a scale of 1).

Average score = 60%

$$\Rightarrow \frac{6x+7x+8x+9x+10x}{5}=\frac{60}{100}$$

$\Rightarrow$ 8x = 0.6

$\Rightarrow$ x = 0.075

So the marks are 0.45, 0.525, 0.6, 0.675 and 0.75

Number of times the marks exceed 50% is 4.

13. **Ans: (d)**

Sol: Work done in one day by A, B, C and D are $\frac{1}{4},\frac{1}{8},\frac{1}{16}$ and $\frac{1}{32}$ respectively.

Scanned with CamScanner

Using answer choices, we note that the pair of B and C does $\frac{3}{16}$ of work in one day; the pair of A and D does $\frac{1}{4}+\frac{1}{32}=\frac{9}{32}$ of the work in one day.

Hence, A and D take $\frac{32}{9}$ days.

B and C take $\frac{16}{3}=\frac{32}{6}$ days.

Hence, the first pair must comprise of A and D.

14. Ans: (a)

Sol: Let x be the total number of people the college will ask for donations.

$\therefore$ People already solicited = 0.6x

Amount raised from the people solicited

$= 600\times0.6x = 360x$

Now 360x constitutes 75% of the amount.

Hence, remaining 25% = 120x.

$\therefore$ Average donation from remaining people

$$= \frac{120x}{0.4x} = 300$$

15. Ans: (d)

Sol: Let x be rate of Rahul, and y be the rate of current in mph.

$$\frac{12}{x-y}-\frac{12}{x+y}=6 \Rightarrow \frac{y}{x^2-y^2}=\frac{1}{4}$$

$$\Rightarrow y=\frac{x^2-y^2}{4} \text{ ------- (i)}$$

When Rahul doubles his rowing rate, then we have

$$\frac{12}{2x-y}-\frac{12}{2x+y}=1 \Rightarrow \frac{2y}{4x^2-y^2}=\frac{1}{12}$$

$$\Rightarrow y=\frac{4x^2-y^2}{24} \text{ ------ (ii)}$$

Hence, from (i) and (ii), we have $2x^2 = 5y^2$

Putting $x^2=\frac{5}{2}y^2$ in (i), we get

$$y=\frac{\frac{3}{2}y^2}{4} \Rightarrow y=\frac{8}{3}$$

16. Ans: (b)

Sol: If Shyam takes 1 min for every 3 steps, then he takes $\frac{1}{3}$ min for every step.

For 25 steps, he takes $\frac{25}{3}$ min, i.e, 8.33 min.

So Vyom takes $\frac{1}{2}$ min for every step.

For 20 steps, he takes $\frac{20}{2}$ min, i.e, 10 min.

Difference between their time = 1.66 min.

Escalator takes 5 steps in 1.66 min and difference in number of steps covered = 5

Speed of escalator is 1 step for 0.33 min, i.e. 3 steps per minute.

If escalator is moving, then Shyam takes 25 steps and escalator also takes 25 steps.

Hence, total number of steps = 50.

Scanned with CamScanner

17. **Ans: (a)**

Sol: In first updown cycle, the reduction price is Rs. 441. According to this, (b) and (d) are removed. Now we have to analyze (c). If the original price is Rs. 2,500, then after first operation, the price will be 2500 – 441 = Rs. 2,059. In second operation, it will come down to around Rs. 400. So the value is not equivalent to Rs. 1,944.81.

Hence, option (a) is the correct answer.

18. **Ans: (b)**

Sol: Since thief escaped with 1 diamond.

Before 3rd watchman he had $(1+2)\times2 = 6$

Before 2nd watchman he had $(6+2)\times2 = 16$

Before 1st watchman he had $(16+2)\times2 = 36$

Alternative method:

Check with choices.

19. **Ans: (c)**

Sol: Let's assume that

p days : they played tennis

y days : they went for yoga

T days : total duration for which Ram and Shyam stayed together.

$\Rightarrow p + y = 22$

$(T - y) = 24$

$\& (T - p) = 14$

Adding all of them,

$2T = 22 + 24 + 14 \Rightarrow T = 30$ days.

20. **Ans: (c)**

Sol: By trial and error:

$30 \times 12 = 360 > 300$

$30 \times 7.5 = 225 < 300$

$50 \times 6 = 300.$

Hence, he rented the car for 6 hrs.

21. **Ans: (b)**

Sol: Because each word is lit for a second,

$$\text{LCM}\left(\frac{5}{2}+1, \frac{17}{4}+1, \frac{41}{8}+1\right)$$

$$= \text{LCM}\left(\frac{7}{2}, \frac{21}{4}, \frac{49}{8}\right)$$

$$\frac{\text{LCM}(7,21,49)}{\text{HCF}(2,4,8)} = \frac{49\times3}{2} = 73.5 \text{ s}$$

22. **Ans: (d)**

Sol: $\text{HCF}\left(\frac{9}{2}, \frac{27}{4}, \frac{36}{5}\right) = \frac{\text{HCF}(9,27,36)}{\text{LCM}(2,4,5)} = \frac{9}{20}$ lb

= Weight of each piece

Total weight = 18.45 lb

Maximum number of guests

$$= \frac{18.45\times20}{9} = 41$$

23. **Ans: (d)**

Sol: Total amount of work = 60 man-hours

From 11 am to 5 pm, 6 technicians

= 36 man-hours

From 5 pm to 6 pm, 7 technicians

= 7 man-hours

From 6 pm to 7 pm, 8 technicians

= 8 man-hours

From 7 am to 8 pm, 9 technicians

= 9 man-hours

Total = 60 man-hours

Scanned with CamScanner

24. Ans: (c)

Sol: Machine I:

Number of nuts produced in one minute

= 100

To produce 1000 nuts time required

= 10 min

Cleaning time for nuts = 5 min

Over all time to produce 1000 nuts

= 15 min.

Over all time to produce 9000

= 135 min – 5 min

= 130 min ------- (1)

Machine II:

To produce 75 bolts time required = 1 min

To produce 1500 bolts time required

= 20 min

Cleaning time for bolts = 10 min.

Effective time to produce 1500 bolts

= 30 min.

Effective time to produce 9000 bolts

$= 30 \times 6 - 10$

= 170 min ------- (2)

From (1) and (2)

Minimum time = 170 minutes.

25. Ans: (b)

Sol: $6^{10} \times 7^{17} \times 11^{27}$

$(2 \times 3)^{10} \times 7^{17} \times 11^{27}$

$\Rightarrow 2^{10} \times 3^{10} \times 7^{17} \times 11^{27}$

No. of prime factors

$= 10 + 10 + 17 + 27 = 64$

26. Ans: (d)

Sol:

$7^{17} \times 6^{63} \times 3^{65}$

1

Units digit 1

1

$3 \times 6 \times 3 = 54$

27. Ans: (b)

Sol: $\frac{\sqrt{7}-\sqrt{5}}{1} \times \frac{\sqrt{7}+\sqrt{5}}{\sqrt{7}+\sqrt{5}} = \frac{2}{\sqrt{7}+\sqrt{5}}$

$\frac{\sqrt{9}-\sqrt{7}}{1} \times \frac{\sqrt{9}+\sqrt{7}}{\sqrt{9}+\sqrt{7}} = \frac{2}{\sqrt{9}+\sqrt{7}}$

$\frac{\sqrt{5}-\sqrt{3}}{1} \times \frac{\sqrt{5}+\sqrt{3}}{\sqrt{5}+\sqrt{3}} = \frac{2}{\sqrt{5}+\sqrt{3}}$

$\frac{\sqrt{11}+\sqrt{9}}{1} \times \frac{\sqrt{11}+\sqrt{9}}{\sqrt{11}+\sqrt{9}} = \frac{2}{\sqrt{11}+\sqrt{9}}$

$\therefore$ Largest is $\frac{2}{\sqrt{5}+\sqrt{3}}$

28. Ans: (d)

Sol: $p^q = q^p$ and $q = 9p$

$\Rightarrow p^{qp} = (9p)^p \Rightarrow p^9 = 9p$

$\Rightarrow p^8 = 9 \Rightarrow p = \sqrt[8]{9}$

29. Ans: (a)

Sol: LCM = 44 HCF $\Rightarrow$ L = 44H

LCM + HCF = 1125 $\Rightarrow$ 44 H + H = 1125

45H = 1125

$\therefore$ L = 44 × 25

= 1100

a × b = L × H

25 × b = 1100 × 25

b = 1100

Scanned with CamScanner

30. **Ans: (c)**

Sol: Let the numbers be 12a, 12b (where a, b are co-primes)

LCM of 12a, 12b is 12ab

$\Rightarrow 12ab = 924$

$ab = 77 \Rightarrow 1 \times 77$

$\Rightarrow 7 \times 11$

$\therefore$ No. of pairs are '2'

31. **Ans: (c)**

Sol:

$$= 1 + \cfrac{1}{1 + \cfrac{1}{1 + \cfrac{1}{1 + \frac{3}{5}}}}$$

$$= 1 + \cfrac{1}{1 + \cfrac{1}{1 + \frac{5}{8}}}$$

$$= 1 + \cfrac{1}{1 + \frac{8}{13}}$$

$$= 1 + \frac{13}{21} = \frac{34}{21}$$

32. **Ans: (b)**

Sol: 50% of (p – q) = 30% of (p + q)

$$\frac{50}{100}(p-q) = \frac{30}{100}(p+q)$$

$5p - 5q = 3p + 3q$

$2p = 8q$

$p:q = 4:1$

33. **Ans: (b)**

Sol: $\because$ A's income is 10% more than B's income

If B = 100, A = 100 + 10 = 110

B is less than A

$$\%less = \frac{Difference}{Base\ value} \times 100$$

$$= \frac{10}{110} \times 100$$

$$= 9\frac{1}{11}\%$$

34. **Ans: (b)**

Sol:

100 -------- 160

$$\%less = \frac{60}{160} \times 100$$

$$= 37.5\%$$

35. **Ans: (d)**

Sol:

Let CP of one pen is Rs. 1

price of 50 pens = 50 × 1 = 50

$$\text{Required profit} = 50 \times \frac{10}{100} = 5$$

$$\text{Less on 40 pens} = 40 \times \frac{5}{100} = 2$$

Required profit on remaining 10 pens

$$= \%\ of\ profit = \frac{7}{10} \times 100 = 70\%$$

Scanned with CamScanner

36. Ans: (d)

Sol: Cost price of one guava = y/x

Selling price of one guava = x/y

$$\text{Profit} = \frac{x}{y} - \frac{y}{x} = \frac{x^2 - y^2}{xy}$$

$$\%P = \frac{\frac{x^2 - y^2}{xy}}{y/x} = \frac{x^2 - y^2}{y^2}\%$$

37. Ans: (b)

Sol: Let the SP of one article is Rs. 1

Total sales = 60 × 1 = 60

Profit = 15 × 1 = 15

Cost price = 45

$$\%p = \frac{15}{45} \times 100 = 33\frac{1}{3}\%$$

38. Ans: (b)

Sol: CP (12) = SP (9)

$$\left.\frac{CP}{SP} + \frac{9}{12} = \frac{3}{4}\right\} \text{profit} = 1$$

$$\%p = \frac{1}{3} \times 100 = 33\frac{1}{3}\%$$

39. Ans: (c)

Sol:

$$cp \xrightarrow{\uparrow 10\%} mp \xrightarrow{\downarrow 20\%} sp$$

$$100 \text{ ——— } 110 \text{ ——— } 88$$

22

% 2 = 12%

40. Ans: (b)

Sol: p = 1, A = 3, T = 20

$$A = p\left[1 + \frac{TR}{100}\right]$$

$$3 = 1\left[1 + \frac{20 \times R}{100}\right] \Rightarrow 2 = \frac{R}{5} \Rightarrow R = 10\%$$

Where p = 1, A = 2, R = 10%

$$2 = 1\left[1 + \frac{T \times 10}{100}\right] \Rightarrow T = 10 \text{ years}$$

41. Ans: 140

Sol:

I	II	III	IV	V
120	115	110	105	100

$550 \rightarrow 770$

$100 \rightarrow ?$

$$\frac{100}{550} \times 770 = 140$$

42. Ans: (a)

Sol:

$$A = p\left[\left[1 + \frac{\frac{R}{4}}{100}\right]^3 - 1\right]$$

$$= 8000\left[\left(1 + \frac{5}{100}\right)^3 - 1\right] = 1261$$

43. Ans: (c)

Sol:

$$\frac{1 + 2 + \ldots\ldots 100}{100} \text{(or)} \frac{1 + 100}{2} = 50.5$$

Scanned with CamScanner

44. Ans: (c)

Sol: $R:S:H=\frac{1}{3}:\frac{1}{4}:\frac{1}{5}$

$=20:15:12$

$$\left.\begin{array}{ll} R=20\times4+10\times8 & =160 \\ S= \quad 15\times12 & =180 \\ H= \quad 12\times12 & =144 \end{array}\right\} 160:180:144$$

$\frac{40}{121}\times847=280$

45. Ans: (d)

Sol:

	A	B
7 years ago age	3x	4x
Present ages	3x+7	4x+7
After 9 years	3x+16	4x+16

$\frac{3x+16}{4x+16}=\frac{7}{8}\Rightarrow 4x=16\Rightarrow x=4$

$\therefore$ Present age of $B=4\times4+7=23$

46. Ans: (d)

Sol: Fourth proportion $d=\frac{bc}{a}$

$=\frac{11\times12}{6}=22$

47. Ans: (d)

Sol:

$\frac{a}{b}=\frac{c}{d}=\frac{e}{f}=\frac{3}{1}$ $\quad\because\begin{bmatrix} a=c=e \\ b=d=f \end{bmatrix}$

$\frac{2a^2+3c^2+4e^2}{2b^2+3d^2+4f^2}=\frac{9a^2}{9b^2}=\frac{a^2}{b^2}=\frac{3^2}{1^2}=9$

48. Ans: (c)

Sol: $B+G=1200$ --------- (1)

$\frac{80}{100}B+\frac{70}{100}G=\frac{75}{100}\times1200=900$

$\frac{8}{10}B+\frac{7}{10}G=900$ --------- (2)

$(2)-\frac{7}{10}(1)$

$\frac{8}{10}B+\frac{7}{10}G=900$

$\frac{7}{10}B+\frac{7}{10}G=840$

$\frac{1}{10}B=60\Rightarrow B=600$

49. Ans: (a)

Sol:

A	:	B	:	C
6×5	:	4×6	:	9×4
30	:	24	:	36
5	:	4	:	6

A's share $=\frac{5}{15}\times1800=600$

50. Ans: (b)

Sol: For the question above, the following Venn diagram can be drawn:

Scanned with CamScanner

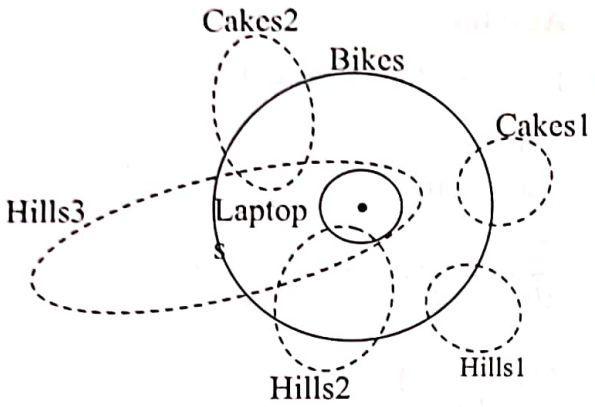

It is clear from the figure that the conclusion 'All Laptops are Hills' does not hold.

Similarly, some Cakes are hills is also not necessarily true. If we takes a look at II & IV, we can conclude that one of them has to the true. Hence, the answer is (b).

51. Ans:(c)

Sol: The following Venn Diagram can made for the sequence A:

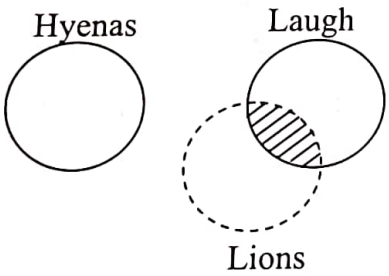

Obviously, the lions who laugh are not hyenas, Hence, the conclusion is justified. The following Venn Diagram will be made for the sequence D:

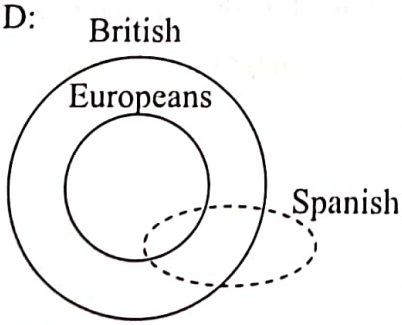

It is obvious that whatever circle we draw for Spanish (apart from the one shown) it will have to intersect the circle for Europeans. This effect, means that, it has also to intersect with British circle. Hence, the conclusion that 'Some British are Spanish' is justified.

52. Ans: (a)

Sol: The following venn diagram can be made for the sequence C:

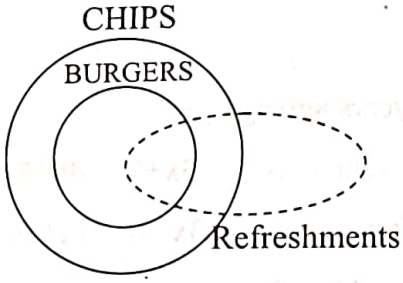

The conclusions for C is justified in the above figure.

The following venn diagram is made for sequence D:

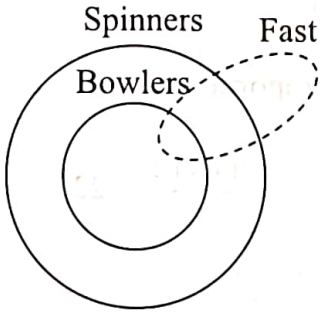

As it clear from the diagram above, he conclusion is justified on the basis of the same logic as for the last two diagrams.

Scanned with CamScanner

53. **Ans: (a)**

Sol:

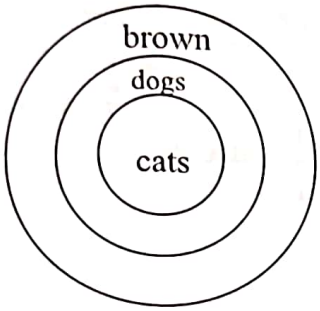

It is clear from the venn diagram that conclusion I follow so (a) is the right option.

54. **Ans: (d)**

Sol:

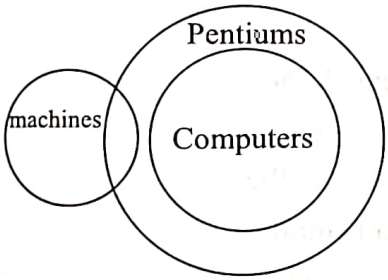

It is clear from the diagram that neither I nor II follows

55. **Ans: (b)**

Sol:

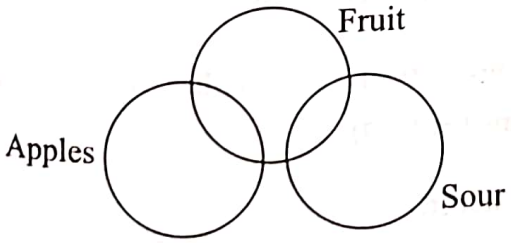

As per given statements no relation in between apples to sour in definite condition so it is clear that conclusion 2 follow.

56. **Ans: (a)**

Sol:

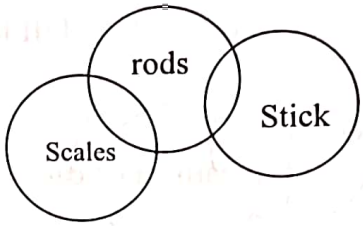

57. **Ans: (c)**

Sol:

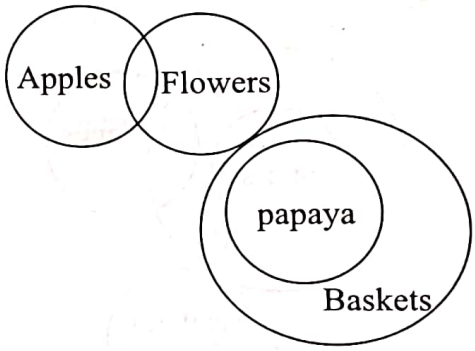

It is clear from the venn diagram that any II and IV follows.

58. **Ans: (e)**

Sol:

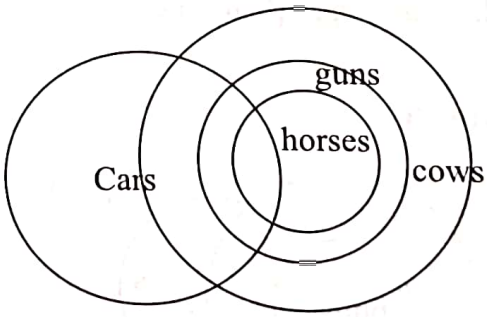

It is clear from the venn diagram that all conclusion follows.

Scanned with CamScanner

59. Ans: (c)

Sol: As option either I or IV, II and III follows.

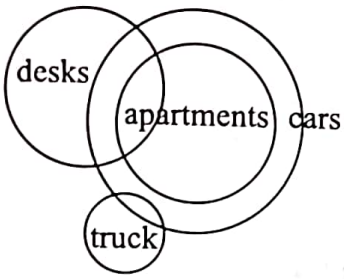

60. Ans: (b)

Sol:

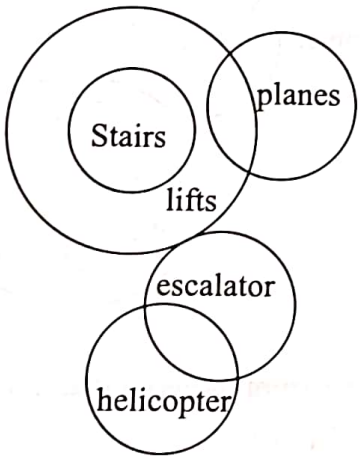

From the venn diagram we can conclude that only I and IV follows.

61. Ans: (c)

Sol:

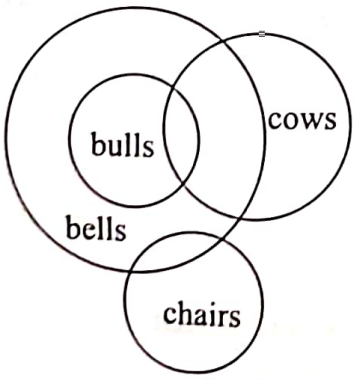

From the venn diagram only II follow.

62. Ans: (b)

Sol:

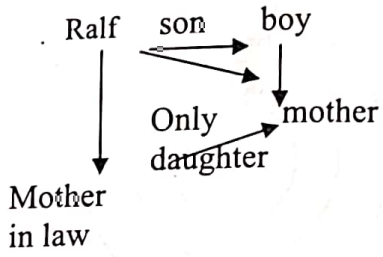

63. Ans: (b)

Sol:

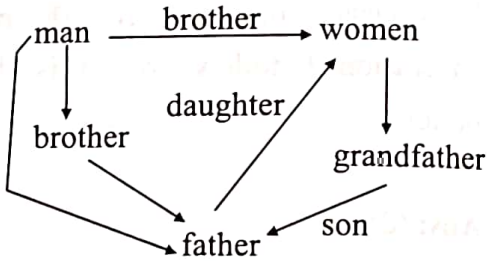

64. Ans: (a)

Sol: + represents father

– represents wife

× represents brother

÷ represents mother

= represents sister

Now,

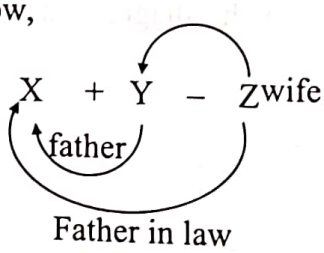

This reflects x is father in-law of z. So, answer is (a)

65. Ans: (d)

Sol:

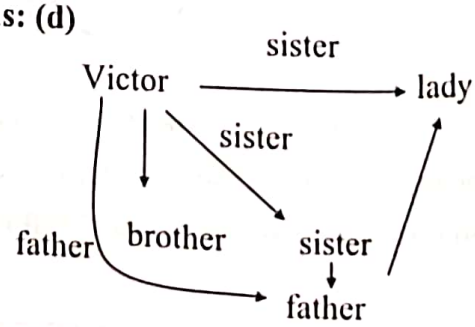

Scanned with CamScanner

66. **Ans: (b)**

Sol: Haiden(Female/lawyer) married to Raina (teacher so male)

Balaji/ engineer(male)

patel/female(doctor, lawyer, manager)

Murli(female/doctor) is sister of morker(manager / male)

As patel can't be doctor or lawyer she must be manager and Murli become doctor because no female can have same profession and can't be teacher or engineer

So automatically we can conclude that Gony is a male and lawyer (b)

67. **Ans: (d)**

Sol: From above conclusion only male persons are Raina, Gany, Balaji and Morker.

68. **Ans: (b)**

Sol:

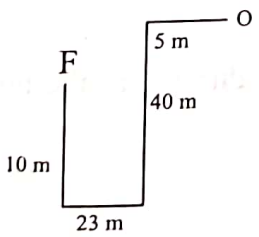

When we will look from F (Flat) to O (Office) in the figure it can be observed that the direction is northeast. Option (b) is correct.

69. **Ans: (a)**

Sol:

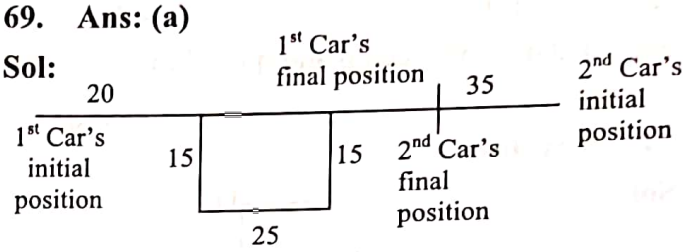

From the above figure it is clear that Car 1 would move 45 kms along the highway while Car 2 would run 35 kms along the same highway. Naturally, the distance between the two cars at this time would be 20 km. Option (a) is correct.

70. **Ans: (c)**

Sol:

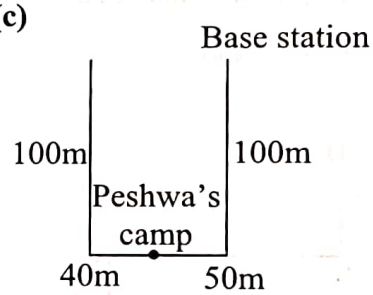

Diagram for Sol.71 to Sol.73

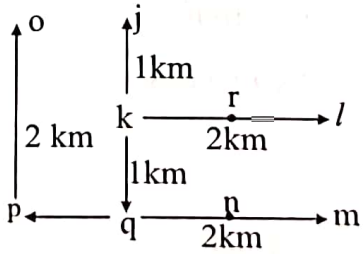

71. **Ans: (a)**

Sol: distance between k and *l* is 2 km

72. **Ans: (d)**

Sol: distance between k and r is 1 km

Scanned with CamScanner

73. Ans: (c)

Sol: distance between p and q is 1 km

74. Ans: (c)

Sol:

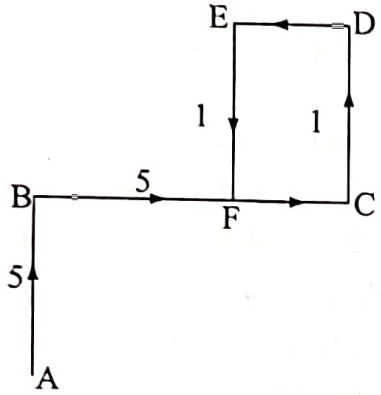

If A is the starting point

The required distance is seen on $AF = \sqrt{50} = 5\sqrt{2}$.

75. Ans: (a)

Sol:

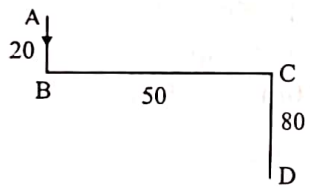

$d/AD = \sqrt{50^2 + 100^2}$

$\sqrt{12500} = 50\sqrt{5}$ meters

76. Ans: (c)

Sol:

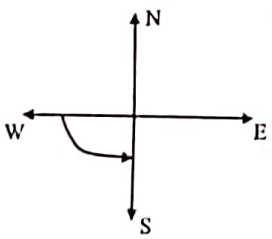

There is a 90° counter clockwise shift. If the person follows the east pointer, he would actually be going north.

77. Ans: (d)

Sol:

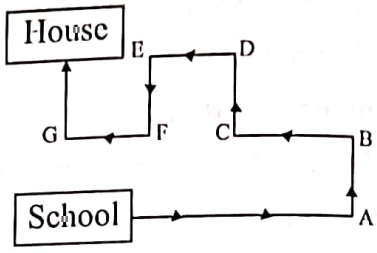

We need to just work out the direction for this question. Since Alok's house is south facing, the above figure will describe his journey correctly. Hence, the school faces east.

78. Ans: (d)

Sol:

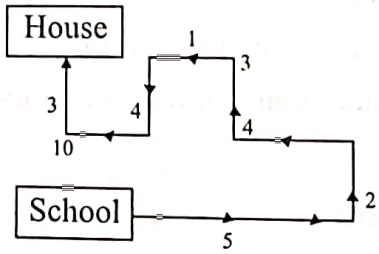

According to this figure the house is north west.

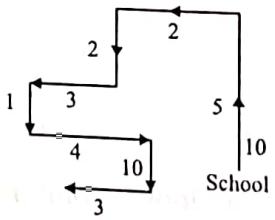

According to this figure the house is south west.

Since we do not know the starting direction, we can not determine the answer. Hence, Option (d) is the correct answer.

Scanned with CamScanner

79. **Ans: (a)**

Sol: Only the first conclusion can be drawn. It is clear form the statement that the RDX explosive can cause massive destruction and can kill number of persons with single explosion. The second conclusion cannot be drawn since we have no indication to conclude that RDX is used only to blast planes or trains. Hence, option (a) is correct.

80. **Ans: (d)**

Sol: Neither conclusion is valid. Hence, option (d) is correct.

81. **Ans: (a)**

Sol: Conclusion I follow while the second one does not. Hence, option (a) is correct.

82. **Ans: (c)**

Sol:

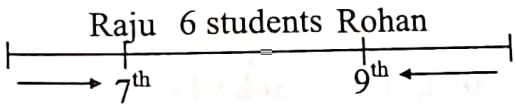

Total number of students = 7 + 9 + 6 = 22

83. **Ans: (b)**

Sol:

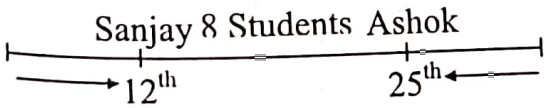

Total number of students = 12 + 8 + 25 = 45

84. **Ans: (d)**

Sol:

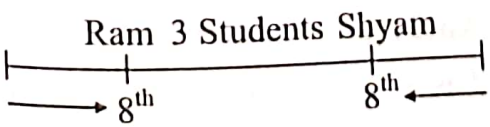

Total number of students = 8 + 8 + 3 = 19

85. **Ans: (a)**

Sol:

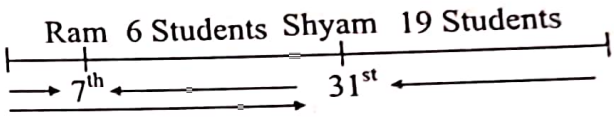

Ram's position from right = 19 + 1 + 7 = 27

86. **Ans: (d)**

Sol:

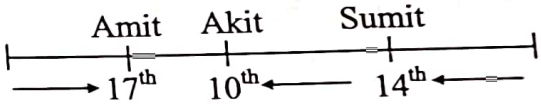

Total 50 students

Students between Amit and Sumit

50 – 31 = 19

So, Ankit position is 10th to Right from Sumit

now Ankit position from right end is

14 + 10 = 24

87. **Ans: (c)**

Sol:

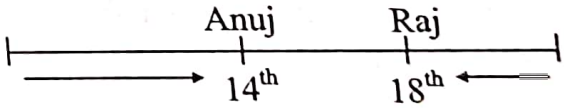

After interchange the arrangement is

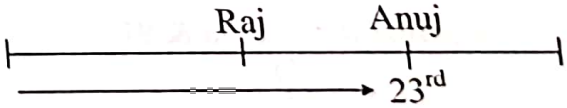

Total students 23 + 17 = 40

Raj position from right 40 – 14 + 1 = 27

Raj's position is 27th from right.

Scanned with CamScanner

88. Ans: (d)

Sol:

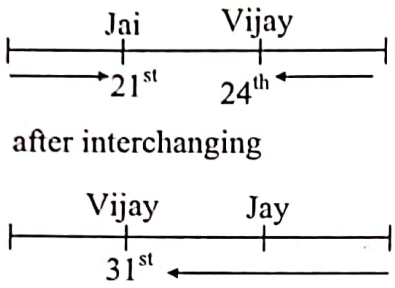

Now total number of students

$= 31 + 21 - 1 = 51$

Jai's position from left end

is $51 - 24 + 1 = 28$

89. Ans: (a)

Sol:

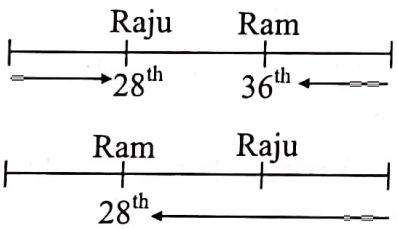

Total persons $28 + 28 - 1 = 55$

now, raju's position from left is

$55 - 36 + 1 = 20$

Diagrams for Sol. 90 & 91

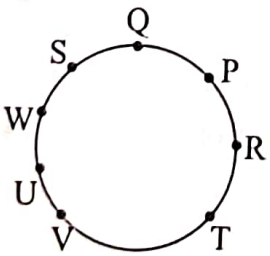

90. Ans: (a)

Sol: From the above sitting arrangement we can tell that R and V are not neighbors.

91. Ans: (d)

Sol: From the above sitting arrangement T is immediately right of V.

92. Ans: (a)

Sol:

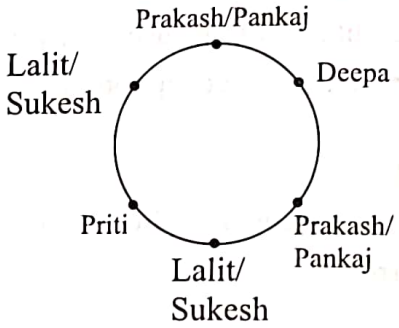

Sukesh is sitting opposite to prakash

93. Ans: (d)

Sol: From the above sitting arrangement we can't determine who is just right to pankaj

Diagram for Sol. 94 & 95

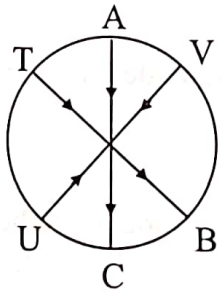

94. Ans: (c)

Sol: From the above sitting arrangement we can say that B and C are not facing the centre

95. Ans: (c)

Sol: T is 3rd to the left with respect to B.

Scanned with CamScanner

Diagram for Sol. 96 & Sol. 98

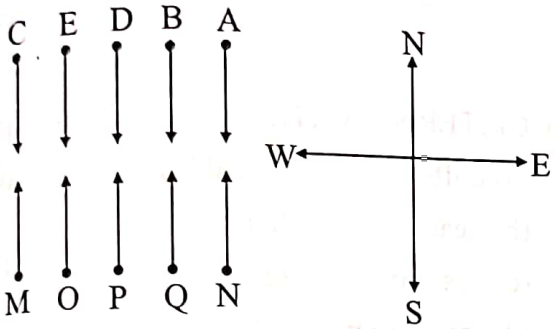

96. **Ans: (b)**

Sol: N is sitting third to the right of O

97. **Ans: (a)**

Sol: New arrangement is

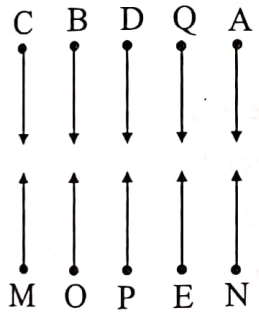

After arrangement Q is opposite to O and B is second person left to Q

98. **Ans: (d)**

Sol:

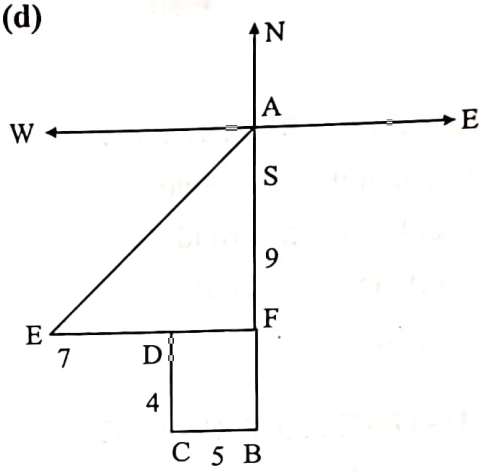

DE = CD = 5m

then EF = 7 + 5 = 12

$AE = \sqrt{5^2 + 12^2} = \sqrt{169} = 13m$

Direction south west

Scanned with CamScanner

Chapter 1 Analogy

01. IMPERVIOUS : LIQUID : :
(a) inaudible : sound
(b) unbreakable : rigid
(c) reflective : mirror
(d) opaque : light

02. AUSTERE : ADORNMENT : :
(a) credible : reason
(b) rigid : posture
(c) laconic : speech
(d) gloomy : pageant

03. DISPUTE : ARBITRATOR : :
(a) trial : jury
(b) election : candidate
(c) tournament : organizer
(d) seminar : speaker

04. DINOSAUR : REPTILE : :
(a) horse : centaur
(b) dodo : bird
(c) snake : cobra
(d) rooster : hen

05. LULLABY : SONG : :
(a) narrative : novel
(b) teaching : lecturer
(c) stanza : poem
(d) diatribe : speech

06. CISTERN : WATER : :
(a) coffer : valuables
(b) beach : tide
(c) pasture : grass
(d) sanitarium : refuge

07. NARCISSISM : LOVE : :
(a) hostility : criticism
(b) empathy : pity
(c) meditation : thought
(d) guilt : blame

08. LOG : SHIP : :
(a) check book : deposit
(b) calendar : month
(c) encyclopedia: information
(d) diary : person

09. SHRUG : INDIFFERENCE : :
(a) sneer : cunning
(b) grip : avarice
(c) shame : uneasiness
(d) cough : allergy

10. CONDUCTOR : ORCHESTRA : :
(a) surveyor : mountain
(b) pilot : ship
(c) guard : fence
(d) hero : scene

Scanned with CamScanner

11. PEDANTIC : LECTURE : :
(a) appeasing : criticism
(b) sympathetic : speech
(c) priestly : religion
(d) sententious : sermon

12. DUPE : GULLIBLE : :
(a) liar : facetious
(b) coward : craven
(c) commentator: caustic
(d) attorney : impartial

13. RANK : OFFICER : :
(a) house : architect
(b) hospital : doctor
(c) denomination : currency
(d) wood : tree

14. STIPPLE : DOT : :
(a) striate : line
(b) disguise : aim
(c) engraving : drawing
(d) dimple : cheek

15. ACCELERATION : SPEED : :
(a) sensibility : caress
(b) movement : momentum
(c) variation : rhythm
(d) crescendo : sound

16. ENTERTAINMENT : DIVERT : :
(a) theory : refute
(b) explanation : suffice
(c) blueprint : design
(d) conundrum : perplex

17. SQUANDER : MONEY : :
(a) trespass : property
(b) dally : time
(c) procrastinate : task
(d) accomplish : success

18. RULER : INCH : :
(a) watch : minute
(b) sundial : time
(c) arc : circle
(d) merchandise : price

19. NOTE : MUSIC : :
(a) drawing : portrait
(b) dance : rhythm
(c) word : language
(d) fable : story

20. JUBILEE : CELEBRATION : :
(a) forethought : risk
(b) deluge : flood
(c) provocation : excellence
(d) offense : attack

21. VERIFY : DOUBTFULNESS : :
(a) line up : alignment
(b) bore : weariness
(c) oppose : controversy
(d) purify : imperfection

22. AUTHORS : ROYALTIES : :
(a) corporations : stocks
(b) customers : sales
(c) stockholders : dividends
(d) employees : taxes

Scanned with CamScanner

23. JOY : ECSTASY : :
(a) lethargy : jealousy
(b) surprise : amazement
(c) worry : curiosity
(d) conceit : irritation

24. MERCHANT : SHOPPER : :
(a) auctioneer : bidder
(b) retailer : wholesaler
(c) tenant : landlord
(d) attorney : prosecutor

25. SYCOPHANT : FLATTERY : :
(a) extrovert : prominence
(b) dunce : stupidity
(c) clown : boldness
(d) cynic : optimism

26. NIGHTMARE : DREAM : :
(a) semaphore : signal
(b) dread : expectation
(c) lure : trap
(d) fear : victim

27. FORGERY : COUNTERFEITER : :
(a) valuable : burglar
(b) robbery : thief
(c) ransom : abductor
(d) treason : plunderer

28. WAKE : SHIP : :
(a) harvest : grain
(b) furrow : plow
(c) arrow : quiver
(d) bale : rope

29. PERFECTLY : ERROR : :
(a) willingly : intention
(b) hastily : assistance
(c) ceaselessly : energy
(d) promptly : delay

30. HORTICULTURE : PLANTS: :
(a) lithography : ink
(b) astronomy : earth
(c) zoology : birth
(d) forestry : trees

31. FORGERY : COUNTERFEIT : :
(a) perjury : testimony
(b) damage : insurance
(c) embezzlement : swindle
(d) assassination : leadership

32. CACOPHONY : SOUND : :
(a) soprano : tone
(b) friction : heat
(c) ripple : water
(d) glare : light

33. APPROVAL : KUDOS : :
(a) marriage : betrothal
(b) promotion : elevation
(c) censure : ostracism
(d) loyalty : betrayal

34. ZEALOUS : ENTHUSIASTIC : :
(a) pedantic : educated
(b) flamboyant : stylish
(c) cautious : prudent
(d) pious : virtuous

Scanned with CamScanner

35. MICROCOSM : WORLD : :
(a) microbe : organism
(b) microscope : cell
(c) microfilm : camera
(d) microchip : printer

36. MYRIAD : NUMBER : :
(a) elevated : height
(b) confined : space
(c) astronomical : distance
(d) obese : girth

37. ELABORATE : SKETCHY : :
(a) sell : constructed
(b) articulate : unclear
(c) elucidate : clear
(d) agonize : gloomy

38. SKIN : FRUIT : :
(a) bark : tree
(b) hull : boat
(c) seed : flower
(d) peak : hill

39. ANTICIPATION : REMINISCENCE : :
(a) presentiment : hindsight
(b) instigation : irritation
(c) compliment : condolence
(d) hopefulness : sorrow

40. IRRESOLUTE : OPINION : :
(a) indifferent : feeling
(b) malleable : shape
(c) obvious : evidence
(d) irremediable : value

41. WOODPILE : LOGS : :
(a) forest : trees
(b) husk : corn
(c) mist : rain
(d) bouquet : flowers

42. MAP : TERRAIN : :
(a) counsel : aim
(b) flowchart : procedure
(c) song : mood
(d) roadsign : direction

43. SHOWROOM : CARS : :
(a) shop : salesmen
(b) train : commuters
(c) sidewalk : pedestrians
(d) gallery : paintings

44. INANE : SENSE : :
(a) ruined : poverty
(b) disparate : similarity
(c) synthetic : textile
(d) conglomerate : difference

45. USURY : INTEREST : :
(a) concern : sadness
(b) desire : wish
(c) parsimony : thrift
(d) pardon : punishment

Scanned with CamScanner

Solutions

01. Ans: (d)

Sol: (DEFINING CHARACTERSITIC) An impervious object does not allow liquid to pass through; an opaque object does not allow light to pass through.

02. Ans: (c)

Sol: (DEFINITION) Austere means frugal in adornment; laconic means frugal in speech.

03. Ans: (a)

Sol: (DEFINING CHARACTERISTIC) An arbitrator gives the verdict in a dispute; the jury gives the verdict in a trial.

04. Ans: (b)

Sol: (EXAMPLE AND CATEGORY) Dinosaur is an extinct reptile; dodo (a bird, native to Mauritius island, which has been extinct since the late 17th century) is an extinct bird.

05. Ans: (d)

Sol: (EXAMPLE AND CATEGORY) Lullaby (meaning a soothing song that lulls a child to sleep) is one type of song; diatribe(meaning a bitter, abusive denunciation) is one type of speech.

06. Ans: (a)

Sol: (THING AND PURPOSE) A cistern (meaning a tank) is where water is stored; a coffer (meaning a strong box) is where valuables are stored.

07. Ans: (d)

Sol: (DEFINITION) Narcissism means loving oneself; guilt means blaming oneself.

08. Ans: (d)

Sol: (THING AND PURPOSE). A log(meaning a record of a ship's speed, it's progress, and any shipboard events of navigational importance) records a ship's movements; a diary records a person's actions.

09. Ans: (d)

Sol: (GESTURE AND MEANING) Shrugging (meaning raising the shoulders as a sign of indifference) indicates indifference; coughing indicates allergy.

10. Ans: (b)

Sol: (PERSON AND SPECIALITY) A conductor guides an orchestra; a pilot guides a ship.

11. Ans: (d)

Sol: (DEFINITION) A lecture that is pedantic is bombastic; a sermon that is sententious (meaning abounding in pompous moralizing) is bombastic.

12. Ans: (b)

Sol: (EXAMPLE AND CATEGORY) A dupe is a gullible (meaning capable of being easily cheated) person; a coward is a craven (meaning frightened) person.

Scanned with CamScanner

13. **Ans: (c)**
Sol: (DEFINING CHARACTERISTIC) The status of an officer depends on his rank; the value of a currency depends on its denomination.

14. **Ans: (a)**
Sol: (COLLECTIVE NOUN) A stipple is a collection of dots; a striate is a collection of lines.

15. **Ans: (d)**
Sol: (DEFINITION) Acceleration means gradual increase in speed; crescendo means gradual increase in sound.

16. **Ans: (d)**
Sol: (THING AND PURPOSE) The purpose of an entertainment is to divert; the purpose of a conundrum (meaning a riddle) is to perplex(meaning to confuse).

17. **Ans: (b)**
Sol: (CAUSE AND EFFECT) When one squanders, one wastes money, when one dallies, one wastes time.

18. **Ans: (a)**
Sol: (DEFINING CHARACTERISTIC) Ruler is an instrument calibrated in inches; watch is an instrument calibrated in minutes.

19. **Ans: (c)**
Sol: (PART AND THE WHOLE) Music consists of notes; language consists of words. (A year is divided into months for our convenience, and is not made up of months).

20. **Ans: (b)**
Sol: (DEGREE OF INTENISTY) A jubilee (meaning 50th anniversary) is a very special celebration; deluge is a very heavy flood.

21. **Ans: (d)**
Sol: (ACTION AND PURPOSE) The purpose of verifying is to remove doubtfulness; the purpose of purifying is to remove imperfection.

22. **Ans: (c)**
Sol: (DEFINITION). Royalties are payments made to authors, dividends are payments made to stockholders.

23. **Ans: (b)**
Sol: (DEGREE OF INTENSITY) Ecstasy means intense joy; amazement means intense surprise.

24. **Ans: (a)**
Sol: (PERSON AND CLIENT) A shopper buys goods from a merchant; a bidder buys goods from an auctioneer.

25. **Ans: (b)**
Sol: (DEFINING CHARACTERISTIC) a sycophant is known for his flattery; a dunce is known for his stupidity.

26. **Ans: (b)**
Sol: (DESIRABLE AND UNDESIRABLE FORMS OF AN ACTION) A nightmare is a frightening dream; a dread is a frightening expectation.

Scanned with CamScanner

27. Ans: (b)

Sol: (DEFINING CHARACTERISTIC) A counterfeiter indulges in forgery; a thief indulges in robbery.

28. Ans: (b)

Sol: (CAUSE AND EFFECT) A wake (meaning the visible track of turbulence left by something moving through water) shows the route taken by a ship; a furrow shows the route taken by a plow on a field.

29. Ans: (d)

Sol: (ACTION AND PURPOSE) Doing something perfectly avoids error; doing something promptly avoids delay.

30. Ans: (d)

Sol: (SCIENCE AND SUBJECT) Horticulture is the science dealing with the growth of plants; forestry is the science dealing with the growth of trees.

31. Ans: (c)

Sol: (SYNONYMS) 'Forgery' and 'counterfeit' are synonyms; 'embezzlement' and 'swindle' are synonyms.

32. Ans: (d)

Sol: (DEFINITION) Cacophony is a harsh and discordant sound; glare is an intense and blinding light.

33. Ans: (c)

Sol: (DEGREE OF INTENSITY) Kudos (meaning acclaim for exceptional achievement) is an intensified form of approval; ostracism (meaning exclusion from a group by way of disapproval of one's conduct or views) is an intensified form of censure (meaning expression of strong disapproval).

34. Ans: (c)

Sol: (SYNONYMS) 'Zealous' and 'enthusiastic' are synonyms; 'cautious' and 'prudent' are synonyms. {'Pedantic', 'flamboyant' and 'idolatrous' are intensified and undesirable forms of 'educated', 'stylish' and 'devoted' respectively, and not their synonyms. A 'pious' person may not always be 'virtuous'.}

35. Ans: (a)

Sol: (DEFINITION) A microcosm is a very small world; a microbe is a very small organism.

36. Ans: (c)

Sol: (DEFINITION). Myriad is the adjective indicating a very large number: astronomical is the adjective indicating a very long distance.

Scanned with CamScanner

37. **Ans: (b)**

Sol: (ANTONYM VARIANT) (From a reference to the first words in the answer choices, we can infer that elaborate is used as a verb in this question.) Anything elaborated (meaning worked out in great detail) is not sketchy; anything articulated (meaning explained coherently and clearly) is not unclear.

38. **Ans: (a)**

Sol: (PART AND THE WHOLE) Skin is the outer cover of a fruit; bark is the outer cover of a tree.

39. **Ans: (a)**

Sol: (ANTONYMS) Anticipation (meaning foreseeing what is going to happen) and reminiscence (meaning recollection of past events or experiences) are antonyms; presentiment (meaning feeling that something is about to occur) and hindsight (meaning judgment about the nature of an event after it has occurred) are antonyms.

40. **Ans: (b)**

Sol: (DEFINITION) An irresolute (meaning vacillating or undecided) person can be easily made to change his opinions; a malleable (meaning pliant or pliable) substance can be easily made to change its shape.

41. **Ans: (d)**

Sol: (PART AND THE WHOLE). A woodpile is made up of a number of logs; a bouquet is made up of a number of flowers.

42. **Ans: (b)**

Sol: (THING AND PURPOSE) A map describes a terrain graphically; a flowchart describes a procedure graphically.

43. **Ans: (d)**

Sol: (THING AND PLACE) Cars are exhibited in a showroom; paintings are exhibited in a gallery.

44. **Ans: (b)**

Sol: (ANTONYM VARIANT) An inane (meaning unintelligent) remark lacks sense; a disparate (meaning dissimilar) item lacks similarity. {The related antonym relationship is inane: senseless : : disparate : similar}

45. **Ans: (c)**

Sol: (DESIRABLE AND UNDESIRABLE FORMS OF AN ACTION) Usury (meaning charging excessive interest on a loan) is a heightened and undesirable form of interest; parsimony (meaning excessive frugality) is a heightened and undesirable form of thrift.

Scanned with CamScanner

Chapter 2 Sentence Completion

01. The Cabinet member's resignation was not a total ____: rumors of his imminent departure had been making the rounds in Washington for a week.
(a) withdrawal (b) success
(c) shock (d) pretense

02. The wagon train leaders chose to ____ their route when they realized that the heavy rains had made fording the river too ____ a task.
(a) question...uncomplicated
(b) disregard...common
(c) abandon...legitimate
(d) alter...impracticable

03. Alan waited _____ for his turn, relaxing in an easy chair with his eyes closed.
(a) impatiently (b) eagerly
(c) warily (d) calmly

04. Anthropologists traditionally argue that the male-female division of labor in hunter-gatherer societies arose because it ____ the nuclear family's joint interests and thereby represented a sound, ____ strategy.
(a) impaired...collaborative
(b) respected...divisive
(c) ignored...disinterested
(d) promoted...Co-operated

05. Because of its strength, adhesiveness, and invaluable qualities as a nest-building material, many species of birds ____ silk into their nests.
(a) smuggle (b) jettison
(c) incorporate (d) entice

06. The recruit was ____ by the sergeant's scathing rebuke; nobody had ever ____ him like that before.
(a) flattered...honored
(b) touched...noticed
(c) stung...reprimanded
(d) astonished...questioned

07. Her memoirs are quite unlike those of her predecessors, for she is bold and aggressive where they are ____ and comfortable.
(a) audacious
(b) vivid
(c) bland
(d) brazen

08. The report was relentlessly ____ to the scientist, interpreting one complex event after another to his ____.
(a) magnanimous...dismay
(b) disparaging...initiative
(c) innocuous...indifference

Scanned with CamScanner

(d) hostile...discredit

09. People who don't outgrow their colleges often don't grow in other ways; there remained in Foster's life and imagination a ____ of the undergraduate, clever but ____.
(a) dislike...talented
(b) touch...judicious
(c) streak...immature
(d) fear...dormant

10. She ____ recognition and fame, yet she felt a deep suspicion and ___ for the world in which recognition and fame are granted, the world of money and opinion and power.
(a) mistrusted...antagonism
(b) worked for...respect
(c) endured...veneration
(d) yearned for...contempt

11. Unfortunately, excessive care in choosing one's words often results in a loss of ____.
(a) precision
(b) atmosphere
(c) selectivity
(d) spontaneity

12. Just as the earliest stone tools left by humans may seem nothing more than rock fragments to a layperson, so a lot of fossils require a trained eye to ____ them.
(a) excavate
(b) appreciate
(c) disseminate
(d) antedate

13. According to a noted art critic, one would have to be completely immune to the sensuous pleasures of painting to be ____ Lucien Freud's mesmerizing art.
(a) drawn to
(b) overcome by
(c) enamored of
(d) unaffected by

14. Most people who are color-blind actually can distinguish several colors; some, however, have a truly ____ view of a world all in shades of gray.
(a) monochromatic
(b) opalescent
(c) translucent
(d) astigmatic

15. For years no one could make this particular therapy work in animals larger than rodents, but now two research groups have demonstrated its ____ in dogs.
(a) efficacy (b) defects
(c) variability (d) origin

16. Thanks to the emerging technology of active noise control, automakers may soon be able to ____ noise inside a car and create the long promised "quiet ride."
(a) dampen
(b) energize

Scanned with CamScanner

(c) undertake
(d) concentrate

17. Despite her father's ____ that "a woman's place is in the home" and a ____ reception from her professors and fellow graduate students, Marian Cleeves went on to become the first woman to receive a doctorate in anatomy from the University of California at Berkeley.
(a) warning...gratifying
(b) reprimand...lavish
(c) encouragement...respectful
(d) admonition...cool

18. John Keats, Dylan Thomas, Arthur Rimbaud—all these were poets who *had* to be poets, whom no one or nothing short of death could have ____ their courses.
(a) confirmed in
(b) derailed from
(c) lauded for
(d) interested in

19. By arguing that much of what scientists think they know about the focusing mechanism of the eye is untrue, this radical scholar has gained a reputation as ____ in the field.
(a) a sycophant
(b) a martinet
(c) an opportunist
(d) a maverick

20. The philosopher Auguste Comte ____ the term *altruism* to ____ unselfish regard for the welfare of others.
(a) avoided...rationalize
(b) coined...denote
(c) applied...lessen
(d) explained...refute

21. Given the ability of modern technology to ____ the environment, it is clear that, if we are not careful, the human race may soon be as extinct as the dinosaur.
(a) enhance (b) destroy
(c) analyze (d) repair

22. As founder and president of the Children's Defense Fund, Marian Wright Edelman has ensured that, even though the young cannot vote or make campaign contributions, they are nevertheless not ____ in Washington.
(a) represented (b) distrusted
(c) ignored (d) committed

23. Using novel concepts and techniques previously unknown in commercial advertising, the ____ advertising campaign broke new ground in the field of marketing.
(a) questionable
(b) interminable
(c) imitative
(d) innovative

Scanned with CamScanner

24. The attorney's vibrant voice and ____ sense of timing were as useful to him as his prodigious preparation, attention to detail, and ____ of the law.
(a) deficient...conception
(b) excellent...ignorance
(c) shaky...command
(d) outstanding...mastery

25. Thomas Jefferson called *The Federalist* papers "the best commentaries on the principles of government ever written," and two centuries later they still ____ as the most ____ statements of American political philosophy.
(a) stand...derivative
(b) rate...abstruse
(c) rank...impressive
(d) fascinate...ambiguous

26. Some spider webs are sheets or tangles of threads that delay the ____ of prey, allowing the spider, ____ by vibrations that travel through the threads, time to make its way over to the entangled victim.
(a) escape...alerted
(b) consumption...frightened
(c) capture...thwarted
(d) pursuit...soothed

27. Janet Malcolm depicts the biographer as a nosy, intrusive figure, ____ his subject's private papers.
(a) annotating
(b) restoring
(c) invading
(d) acknowledging

28. Because fruit juice fills babies' small stomachs and ruins their appetite for foods that contain nutrients they ____, consuming large quantities can actually prove ____ to babies less than 24 months old.
(a) prefer...beneficial
(b) choose...counterproductive
(c) require...helpful
(d) need...detrimental

29. Telling gripping tales about a central character engaged in a mighty struggle with events, modern biographies satisfy the American appetite for ____ narratives.
(a) lyrical (b) colloquial
(c) digressive (d) epic

30. A leading philosopher of our time, Ludwig Wittgenstein, laid down a ____ to which good historians ____: "Of that of which nothing is known nothing can be said."
(a) burden...protest
(b) law...amend
(c) rule...adhere
(d) maxim...succumb

31. Musk oxen survived in isolated arctic habitats, but in the nineteenth century they declined rapidly even there, their numbers

Scanned with CamScanner

____ by the armed enthusiasm of explorers, whalers, fur traders, and Eskimo.

(a) swelled (b) augmented
(c) devastated (d) underestimated

32. The banquet had ____ effect on the overfed guests: they began to nod off in their seats.
(a) a soporific
(b) a cumulative
(c) an immoderate
(d) an invigorating

33. He loved his friends, but he held people in general in ____ and maintained that human virtues were unworthy of comparison with a dog's devotion.
(a) reverence (b) abeyance
(c) contempt (d) affection

34. Stunned by Professor Marian Diamond's work showing that rat-brain structure can increase by 5 to 7 percent, one ____ neuroanatomist stated flatly, "Young lady, that brain cannot ____!"
(a) astounded...function
(b) aghast...deteriorate
(c) dumbfounded...think
(d) skeptical...grow

35. All his protestations of ____, Judge Learned and had been deeply ____ at being passed over for the United States Supreme Court, where Oliver Wendell Holmes, Jr., Benjamin Cardozo, and countless others said he belonged.
(a) innocence...embarrassed
(b) disbelief...enervated
(c) indifference...disappointed
(d) despondency...frustrated

36. Halls and audiences for *lieder* recitals tend to be smaller than those for opera and thus more ____ the intimacy and sense of close involvement, which is the recital's particular charm.
(a) inauspicious for
(b) destructive of
(c) conducive to
(d) compromised by

37. In this survey of Revolutionary America, the author finds a remarkable homogeneity of opinion from Massachusetts to Georgia; the differences between the sections are ____, almost always explainable by differences in climate or topography.
(a) sharp (b) nonexistent
(c) irreconcilable (d) superficial

38. According to Lionel Trilling, the paradox of liberalism is that in its quest for freedom it must move toward greater organization, stricter legislation, and increasing ____.
(a) anarchy (b) self-realization
(c) stagnation (d) control

39. Our mood swings about the economy grow more extreme: when things go well, we become ____; when things go poorly, ____ descends.

Scanned with CamScanner

(a) restive...anxiety
(b) euphoria...gloom
(c) prudent...benevolence
(d) ascetic...misery

40. Abandoning the moral principles of his youth, the aging emperor Tiberius led a ____, wanton life.
(a) celibate
(b) rudimentary
(c) debauched
(d) circumspect

41. Although a few of her contemporaries ____ her book, most either ignored it or mocked it.
(a) dismissed
(b) disregarded
(c) deprecated
(d) appreciated

42. All critics have agreed that the opera's score is ____, but, curiously, no two critics have agreed which passages to praise and which to damn.
(a) intolerable
(b) melodious
(c) unsurpassed
(d) uneven

43. A man incapable of ____ action, he never had an opinion about something that he had not worked up beforehand, fashioning it with lengthy care.
(a) premeditated
(b) coherent
(c) spontaneous
(d) calculated

44. Even as the local climate changed from humid to arid and back-a change that caused other animals to become extinct—our almost-human ancestors ____ by learning how to use the new flora.
(a) anticipated
(b) survived
(c) diverged
(d) deteriorated

Scanned with CamScanner

Solutions

01. Ans: (c)

Sol: If Washington political circles had been aware for a week that the Cabinet member was on the way out, his resignation did not come as a *shock* or surprise to them.

02. Ans: (d)

Sol: Because the heavy rains had made their original route *impracticable* or impassable, the leaders decided to *alter* their route.

03. Ans: (d)

Sol: When you read the sentence, you might have anticipated that a word like patiently could be used in the blank. Patiently does not appear as an answer choice, but there is one choice that is close to that meaning: *calmly*. None of the other choices is idiomatic; in other words, none has a meaning that is appropriate in the context of the sentence.

04. Ans: (d)

Sol: Customs generally arise because they serve a function. In this case, the division of labor by gender probably came about because it *promoted* or furthered the interests of the family and in this way was a sensible *cooperative* strategy.

05. Ans: (c)

Sol: Silk possesses qualities invaluable in nest building. Therefore birds *incorporate* or introduce silk into their nests, including it as a component.

06. Ans: (c)

Sol: Because no one had ever rebuked or *reprimanded* the recruit so harshly, the sergeant's words particularly *stung* or smarted.

07. Ans: (c)

Sol: The earlier writer's reminiscences differ from this writer's memoirs in being *bland* and unexciting.

08. Ans: (d)

Sol: A report that constantly interpreted things to reflect badly on or *discredit* someone would clearly be unfriendly or *hostile* to that person.

09. Ans: (c)

Sol: There remained in Foster, who had not grown up fully, a *streak* (trace) of the undergraduate; he was clever but in some ways *immature*.

10. Ans: (d)

Sol: Although she felt *contempt* (scorn) for the world of money and opinion and power, she nevertheless desired or *yearned for* the fame that only that world could give.

11. Ans: (d)

Sol: If you are excessively careful about what you say, you are not likely to be *spontaneous* or free in your choice of words.

Scanned with CamScanner

12. **Ans: (b)**

Sol: A layperson or non expert by definition lacks the training to *appreciate* or recognize the importance of fossils and ancient artifacts.

13. **Ans: (d)**

Sol: It would be extremely hard to be *unaffected* or unmoved by truly mesmerizing, enchanting art.

14. **Ans: (a)**

Sol: If you can see only shades of gray, your view is by definition *monochromatic* (made up of one color or hue).

15. **Ans: (a)**

Sol: If the therapy has been shown to work in dogs (animals larger than rodents), then its *efficacy* or effectiveness in larger animals has been proven.

16. **Ans: (a)**

Sol: To *dampen* or muffle the noise inside a car should make a trip in the car quieter.

17. **Ans: (d)**

Sol: Neither her father's *admonition* (warning or counsel) nor her classmates *cool* (unsociable; distant) reception stopped Cleeves from following her chosen path.

18. **Ans: (b)**

Sol: To *derail* someone *from* his course is to throw him off track.

19. **Ans: (d)**

Sol: By definition, a *maverick* (dissenter; nonconformist) is someone who takes a stand that differs from that of his or her associates.

20. **Ans: (b)**

Sol: Comte *coined* (invented; created) a term to *denote* (stand for; mean) the concept of unselfishness.

21. **Ans: (b)**

Sol: If we manage to *destroy* the environment, we will be well on the way to extinction as a species.

22. **Ans: (c)**

Sol: "Even though" children cannot influence affairs in the usual ways, thanks to Edelman's work they are nevertheless not *ignored*.

23. **Ans: (d)**

Sol: A campaign that breaks new ground is by definition *innovative*.

24. **Ans: (d)**

Sol: Both an *outstanding* sense of timing and a *mastery* of the law would be helpful to an attorney.

Scanned with CamScanner

25. Ans: (c)

Sol: The papers *rank* as (have the status or position of) the most *impressive* statements of American political philosophy.

26. Ans: (a)

Sol: The entangling threads that slow down the victim's *escape* vibrate from the prey's struggles. These vibrations *alert* (warn; inform) the spider that something is trapped in its web.

27. Ans: (c)

Sol: In poking through the subject's private papers, the biographer *invades* the subject's privacy.

28. Ans: (d)

Sol: If the babies drink so much fruit juice that they do not get the varied nourishment they *need*, then drinking large amounts of juice could be *detrimental* (harmful) to them.

29. Ans: (d)

Sol: An *epic* or account of heroic exploits by definition narrates the mighty struggles of a central character or protagonist.

30. Ans: (c)

Sol: Wittgenstein's comment is a *rule* to which good historians should *adhere* or stick. It says, "If you don't know anything about a subject, you can't say anything about it." In other words, write about what you know.

31. Ans: (c)

Sol: The musk oxen declined or grew fewer in number because the herds were *devastated* (destroyed; ravaged) by hunters.

32. Ans: (a)

Sol: A *soporific* effect by definition puts people to sleep, causing them to nod off.

33. Ans: (c)

Sol: Someone who looks on human virtues as less worthy than canine virtues clearly views people in general with *contempt* (scorn).

34. Ans: (d)

Sol: The dumbfounded neuroanatomist disbelieved Diamond's work. *Skeptical* of the results of her experiments, he maintained that a rat's brain could not increase or *grow*.

35. Ans: (c)

Sol: Though he maintained that he did not care (protested his *indifference*), Judge Hand was *disappointed* that he had not been nominated to the Supreme Court.

36. Ans: (c)

Sol: A small hall would tend to promote a sense of closeness appropriate to recitals. In other words, such a hall would be particularly *conducive to* the intimacy that is the recital's special charm.

Scanned with CamScanner

37. **Ans: (d)**

Sol: If the colonies appeared remarkably homogeneous or uniform in opinion, then clearly there were only *superficial* or very minor differences among them.

38. **Ans: (d)**

Sol: One would expect that a liberal political movement advocating freedom would favor less authority, not more. However, Trilling asserts that, paradoxically, contrary to expectations, liberalism must move in the direction of increasing *control*.

39. **Ans: (b)**

Sol: The contrast here is between the extremes of *euphoria* (elation) and *gloom* (melancholy; depression).

40. **Ans: (c)**

Sol: By definition, to lead a lewd or wanton life is to be *debauched* (corrupted by sensuality).

41. **Ans: (d)**

Sol: Though most people disregarded or made fun of her book, some *appreciated* it (admired it; grasped its worth).

42. **Ans: (d)**

Sol: If the critics all say the opera's score has both praiseworthy and wretched sections, then they agree that the score varies in quality. In other words, it is *uneven*.

43. **Ans: (c)**

Sol: Someone who plans everything in advance is not *spontaneous*.

44. **Ans: (b)**

Sol: Our almost-human ancestors did not become extinct. Instead, they *survived*.

Scanned with CamScanner

Chapter 3 English Grammar

01. I have been / waiting for you/
(a) (b)
from a long time / no error
(c) (d)

02. It is I/ who is / your best friend / no error
(a) (b) (c) (d)

03. Unless you do not/ tell me the truth,/
(a) (b)
I cannot help you / no error
(c) (d)

04. I don't like him / because he makes me /
(a) (b)
to do all the work / no error
(c) (d)

05. As this is a secret, / keep this matter /
(a) (b)
between you and I / no error
(c) (d)

Find the synonym

06. Affluent
(a) polluted (d) wealthy
(c) eloquent (d) candid

07. Divulge
(a) dishonor (b) reveal
(c) discourage (d) divert

08. Extravagant
(a) lavish (b) spurious
(c) unique (d) wonderful

09. Panacea
(a) antidote (b) know – all
(c) cure- all (d) ambrosia

10. Prosaic
(a) dull (b) steady
(c) grand (d) expensive

Antonyms

11. Haughty
(a) proud (b) pleasant
(c) comic (d) humble

12. Veracity
(a) difference (b) falsehood
(c) diversity (d) hostility

13. Assuage
(a) conciliate (b) exacerbate
(c) mollify (d) prevent

14. Choleric
(a) calm (b) short-tempered
(c) active (d) sick

15. Craven
(a) coward (b) brave
(c) cheerful (d) sad

Scanned with CamScanner

Find the one – word substitute

16. A service flatterer
(a) sophomore (b) sycophant
(c) sophist (d) savant

17. A person of stick discipline
(a) martinet (b) milliner
(c) masochist (d) mentor

18. A person without experience
(a) felon (b) exponent
(c) rookie (d) doyen

19. Fear of spiders
(a) sitophobia (b) cynophobia
(c) arachnophobia (d) agoraphobia

20. Group of crows
(a) murder (b) flock
(c) swarm (d) herd

Find the meaning of the underlined idiom

21. I am leaving India *for good*.
(a) to do good for the country
(b) to do good for myself
(c) to do nobody good
(d) permanently

22. I did not know that he was *pulling my leg* all the time
(a) complimenting me
(b) defarming me
(c) degrading me
(d) befooling me

23. Only the cowards *hit below the belt*.
(a) give a crippling blow
(b) hit in the thighs
(c) act unfairly
(d) act brutally

24. A good teacher should have the *gift of the gab*
(a) a good personality
(b) a talent for acting
(c) a talent for speaking
(d) an interest in discipline

25. I just paid him a *left-handed* compliment
(a) a flattering
(b) an insincere
(c) a honest
(d) a well-deserved

Reading comprehension:

Passage

Some prophets of doom assert that we shall soon exhaust the Earth's resources or pollute ourselves to death. Optimists assert that Earth's systems are robust and that improved technologies will ease all the pressures on the planet. Others see the main concerns as political, with environmental issues carrying the seeds of inequity and war.

Scientific understanding is too limited to say where the truth lies. If the care of the planet is a management task our species is in the position of a child who of the planet is management task our species is in the position of a child who has to fly a jet plane without knowing what all the switches and levers do.

Scanned with CamScanner

26. Which one of the following statements is true according to the passage?
(a) Sometimes political motives influence people's concern for the planet
(b) Wars will cause greater pollution on Earth.
(c) People will feel exhausted owing to the greenhouse effect.
(d) Men should feel responsible towards society

27. According to the passage nobody knows the truth because
(a) People do not think of what the future holds for them
(b) Scientists often are used by politicians
(c) There are very few scientists capable of research in this area
(d) objective analyses are not thorough or exhaustive

28. The blame for the environmental crisis facing the Earth lies with
(a) Man's greed and selfishness
(b) Inadequate management of Earth's resources
(c) Rapid technological growth
(d) Pressures of overpopulation

29. What does the comparison in the last sentence of the passage convey?
(a) We, on Earth, are inexperienced in managing Earth's resources.
(b) Most of the people do not know how to fly an aeroplane
(c) Our efforts to save the planet are childish.
(d) We are as ignorant as infants

30. The meaning of 'robust' is
(a) strong (b) weak
(c) bad (d) dead

Scanned with CamScanner

Key

01.	Ans: (c)	02.	Ans: (b)
03.	Ans: (a)	04.	Ans: (c)
05.	Ans: (c)	06.	Ans: (c)
07.	Ans: (b)	08.	Ans: (a)
09.	Ans: (c)	10.	Ans: (a)
11.	Ans: (d)	12.	Ans: (b)
13.	Ans: (b)	14.	Ans: (a)
15.	Ans: (b)	16.	Ans: (b)
17.	Ans: (a)	18.	Ans: (c)
19.	Ans: (c)	20.	Ans: (a)
21.	Ans: (d)	22.	Ans: (d)
23.	Ans: (c)	24.	Ans: (c)
25.	Ans: (b)	26.	Ans: (a)
27.	Ans: (d)	28.	Ans: (a)
29.	Ans: (d)	30.	Ans: (a)

Scanned with CamScanner