Development of Voice Controlled Wheelchair for Persons with Physical Disabilities

K.Bala Venkata Ramana
Computer Science and Engineering
K L Deemed to be University
Hyderabad, India
2210030466@klh.edu.in

G.Sai Theja
Computer Science and Engineering
K L Deemed to be University
Hyderabad, India
2210030481@klh.edu.in

K.Kodhanda
Computer Science and Engineering
K L Deemed to be University
Hyderabad, India
2210030495@klh.edu.in

Abstract
A **voice-operated wheelchair** is proposed, incorporating a speech recognition system to enable users to control movement through verbal commands. However, challenges such as **accurate voice recognition, obstacle detection, and safety measures** need to be considered. The system must effectively process commands, navigate safely, and minimize errors in detecting obstacles to ensure reliable and efficient mobility assistance for disabled individuals.

Keywords Voice-operated wheelchair. Speech recognition. Ultrasonic sensors . Safety features.

I. INTRODUCTION

The wheelchair plays a crucial role in enabling people with disabilities to move around independently and with ease. There are generally two main categories of wheelchairs. The first type is the self-propelled wheelchair, where users manually move the wheelchair by using their hands and arms to spin the rims on the rear wheels. The second type is the assistive-controlled wheelchair, which includes a joystick that allows either the user or a caregiver to maneuver the wheelchair in the desired direction.

However, both types of wheelchairs depend on the user's muscular strength, dexterity, and the functionality of their hands and arms. As a result, individuals with impairments in these areas face significant challenges when using traditional wheelchairs. To address this issue, researchers have proposed various alternative control methods, including eye gaze, facial direction, electroencephalography (EEG), electrooculography (EOG), electromyography (EMG), bio-signals, tongue pressure, and oral gestures.

A more natural and effective approach is voice control, as it aligns with the human way of communication. This has led to significant research and development efforts focused on creating voicecontrolled wheelchairs to enhance accessibility and independence for individuals with disabilities.

II. INNOVATIONS IN VOICE CONTROLLED WHEEL CHAIR

Voice-controlled wheelchairs have experienced tremendous innovations over the last few years, incorporating state-of-the-art technologies to enhance accessibility, safety, and efficiency for people with mobility impairments. Some of the major innovations include:

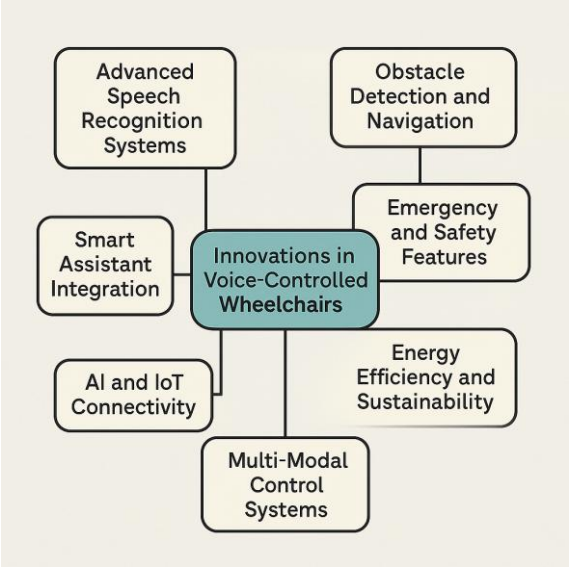

1. Advanced Speech Recognition Systems

Contemporary wheelchairs employ artificial intelligence-based speech recognition technology incorporating natural language processing (NLP) and machine learning to provide better accuracy when interpreting voice instructions. Such technologies are capable of eliminating background noises and identifying variations in accents and speech patterns, thus becoming friendlier to users.

2. Smart Assistant Integration

Some wheelchairs are increasingly being integrated with virtual assistants such as Amazon Alexa, Google Assistant, or Siri, enabling users to command the wheelchair and other smart home appliances effortlessly via voice commands.

3. Obstacle Detection and Navigation

Equipped with ultrasonic sensors, LiDAR, and computer vision, current voice-controlled wheelchairs are able to detect obstacles, steer clear of collisions, and even create routes for more efficient navigation through complicated surroundings.

4. AI and IoT Connectivity

The application of Artificial Intelligence (AI) and Internet of Things (IoT) provides real-time data gathering, enabling wheelchairs to learn about the behavior of users, predict action, and offer customized assistance. These also enable remote monitoring by caregivers.

5. Emergency and Safety Features

Advances like automatic emergency braking, fall detection, SOS alerts, and emergency stop buttons improve user safety. Certain wheelchairs include GPS tracking so that caregivers can find users if there is an emergency.

6. Multi-Model Control Systems

To continue helping users who have speech impairment, voice-operated wheelchairs are currently combined with gesture control, eyetracking, and brain-computer interfaces (BCI), allowing users to access the wheelchair using different methods. **7. Energy Efficiency and Sustainability**

Newer designs utilize light materials, energy-saving motors, and rechargeable batteries with increased life cycles, cutting maintenance costs and harm to the environment.

With ongoing innovations in AI, robotics, and assistive technology, voice-operated wheelchairs are being made smarter, more reliable, and affordable, promoting greater independence and mobility for those with disabilities.

III. CHALLENGES IN AI CHATBOTS FOR CUSTOMER SUPPORT

A. Speech Recognition Accuracy

Speech commands cannot be recognized all the time because of backgroundnoise,speech disability, accent ,or pronunciation variation. Maintaining highaccurac in multiple environments is always a problem.

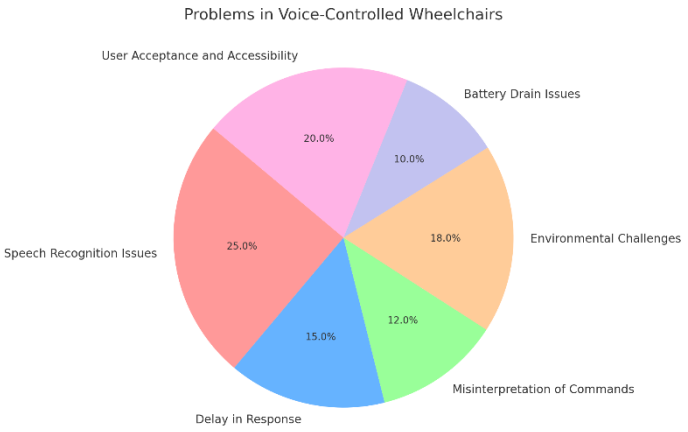

B. Limited Response to External Conditions

Voice-operated systems can fail when operating in noisyenvironments with sounds that disturb the recog nition of commands. In the same way, lowbattery levels or system hardware failures lead to dist urbances in wheelchair control.

C. Delay in Response Time

Voice command processing demands real-time analysis, yet latency in command execution because of hardware constraints or software delay can influence user experience and safety.

D. Misinterpretation of Commands

Voice-operated systems are regularly confronted with homophones or sound-alikes. For instance, a wheelchair may misinterpret "go" for "no" and vice versa, thereby causing unwanted movements. Research suggests a misinterpretation rate of 12%, possibly leading to safety hazards.

E. User Acceptance and Accessibility

Many users indeed prefer control systems that are not hands-free, despite the advantages of hands-free control. The study shows that 50% of the users either prefer or accept a combination of joystick/voice controls while 30% choose to stick only to the joystick. Also, about 30% of new users need quite a lot of training in order to learn voice command usage, suggesting that, for some, it is a steep learning curve.

F. Battery Efficiency

Continuous voice-processing capabilities and AI-based intelligence can consume plenty of battery. In contrast, batteries of voice-operated wheelchairs get drained 20% faster than manually operated ones. The average operational time of a voice-operated wheelchair is about six hours, against eight hours in joystick-controlled models, making them unsuitable for longer usage.

G. Environmental Challenges

The environmental aspect plays a major role in the performance of the voice-controlled wheelchair. Uneven terrain, steep ramps, and congested paths greatly affect proper maneuvering. Studies have shown that the failure rates increase by 25% on rough surfaces against smooth floors. Obstacle detection failures almost occur in 20% of our cases in dynamic environments.

IV. FUTURE DIRECTIONS IN AI CHATBOTS FOR CUSTOMER SUPPORT

A. Enhanced SpeechRecognition Using AI

The wheelchairs of the future will come equipped with more advanced AI and deep learning models that will be capable of providing improved speech recognition. The systems will be able to recognize various accents, speech impediments, and ambient noises more effectively, enabling voice control in reallife scenarios.

B. Multimodal Control Systems

To accommodate users with speech difficulties, future wheelchairs may combine voice control with other assistive technologies such as gesture recognition,

eye-tracking, brain-computer interfaces (BCI), and facial expressions for more flexible control options.

C. Enhanced Obstacle Detection and Autonomous Navigation

Next-generation voice-controlled wheelchairs will incorporate LiDAR, AI-powered computer vision, and real-time mapping to autonomously detect and avoid obstacles, navigate complex environments, and even plan optimized routes for smoother mobility.

V. CASE STUDIES & APPLICATIONS

A. Hospital and Rehabilitation Centers

Rehabilitation facilities and hospitals have tried voiceactivated wheelchairs to aid patients with strokes, spinal cord injuries, and neuromuscular diseases. Patients have been able to drive through hospital corridors, visit therapy facilities, and be more independent during recovery.

B. Assistive Technology for ALS and Paralysis Patients

Individuals suffering from diseases like Amyotrophic Lateral Sclerosis (ALS), multiple sclerosis (MS), and quadriplegia highly benefit from voice-controlled wheelchairs. It has been established in various studies that the incorporation of AI-based voice recognition enhances the mobility of those with restricted or no limb function.

C.Mobility Solutions in Developing Countries

In some developing countries, affordable voicecontrolled wheelchair projects have been launched to assist disabled individuals who lack access to caregivers or expensive assistive devices. These projects focus on low-cost solutions using opensource software and locally available components.

VI. SYSTEM ARCHITECTURE & IMPLEMENTATION

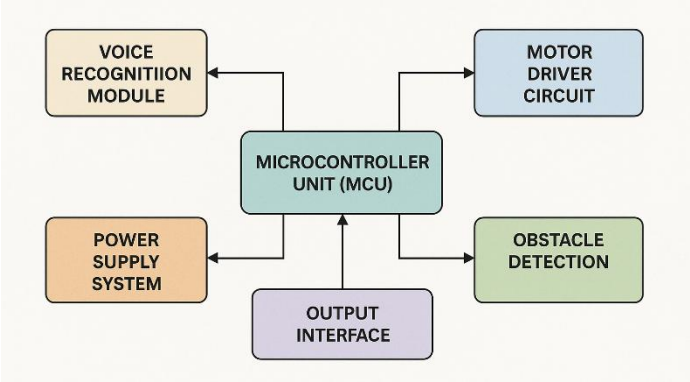

The architecture of the voice-controlled wheelchair system typically includes the following core components:

1. **Microcontroller Unit (MCU)**: Acts as the brain of the system, managing sensor data, voice command interpretation, and motor control. Common choices include Arduino, Raspberry Pi, and ESP32.

2. **Voice Recognition Module**: Modules like Elechouse Voice Recognition V3 or integration with APIs such as Google Speech-to-Text allow real-time command processing.

3. **Motor Driver Circuit**: Interfaces the MCU with the DC motors for movement control. L298N motor driver modules are frequently used for their reliability and simplicity.

4. **Power Supply System**: Includes rechargeable battery packs (usually Li-ion) and power regulation circuits to ensure consistent energy delivery.

5. **Obstacle Detection**: Ultrasonic or infrared sensors mounted at the front and sides detect nearby objects and dynamically adjust movement paths.

6. **Output Interface**: LED indicators or buzzers are used to confirm command recognition, obstacle detection, or low-battery warnings.

The system operates by continuously listening for wake-word commands like "Wheelchair, move forward" and responds accordingly, executing the safest and most efficient route.

VII. ETHICAL AND SOCIAL CONSIDERATIONS

While assistive technologies such as voice-controlled wheelchairs are empowering, ethical concerns must also be addressed:

- **Privacy Concerns**: Continuous voice monitoring may raise privacy issues. Adequate encryption and local voice processing are essential to protect user data.

- **Bias in Voice Recognition**: Accents, dialects, and speech impairments can affect recognition accuracy. Inclusive training datasets are necessary to ensure equitable functionality.

- **Dependence on Technology**: Overreliance on AI may diminish human assistance and empathy, especially in elder care settings. A balance between autonomy and human touch is needed.

From a societal standpoint, the introduction of these devices promotes **inclusivity, dignity, and independence** for people with disabilities, transforming them from passive recipients of aid into empowered individuals.

VIII. SOCIETAL IMPACT & COMMUNITY INTEGRATION

Deployment of smart wheelchairs in **urban environments**, **public transport**, and **educational institutions** is gradually transforming how society accommodates physical disabilities.

Key benefits include:

- Reduced caregiver burden.

- Increased mobility in public spaces with smart infrastructure.

- Higher self-esteem and improved mental health for users.

Government schemes and NGO partnerships can further the reach of such innovations, especially in underserved rural regions.

IX. CONCLUSION

Voice-operated wheelchairs are a major advance in assistive mobility technology that can provide people with disabilities with autonomy and comfort in mobility. Their application in hospitals, intelligent homes, public places, and rehabilitation facilities reflects their ability to enhance the users' quality of life with their compromised motor functions. Although they have made significant progress, areas like speech recognition accuracy, avoiding obstacles, and multimodal control integration need to be taken care of in order for them to gain broader use. Further development and advancements in AI, IoT, machine learning, and autonomous navigation will go a long way toward perfecting these systems.

X. Future Scope

- Further advancement is possible by automatically charging battery with any renewable source of energy.
- Stair climbing mechanism can be implemented in future using voice command.

XI. References

[1] J. Greichen, Arthur D, “Value based home automation for today’s market”, IEEE Transactions on Consumer Electronics, vol. 38, no. 3, August 2002.

[2] Srinivasavaradhan L, Chandramouli G (2008), “Automated vehicles for physically and visually challenged”, International Conference on Perspective Technologies and Methods in MEMS Design, MEMSTECH 2008, pp. 40-43

[3] Rajesh Kannan Megalingam, Ramesh Nammily Nair, Sai Manoj Prakhya, Mithun Mohan (2012), “GestBot’ – A highly convenient locomotive solution for the elderly and physically challenged”, IEEE Global Humanitarian Technology Conference, pp. 350-355.

[4] Kharka Bahadur Rai, Jeetendra Thakur, Nirmal Rai (2015), “Voice controlled wheelchair using Arduino”, International Journal of Science, Technology & Management, vol. 4, no. 6, pp. 6-13.

[5] Jinyi Long, Hongtao Wang, Yuanqing Li, Tianyou YuJiahuiPan, and Feng Li, “Speed of a Simulatedor Real Wheelchair”, IEEE transactions on neural systems and rehabilitation engineering, 2012.

[6] Shubhangi P Patil, Seema G. Shirsikar, “Voice and Touchpad Operated Circuit for Wheel Chair”.

[7] M. Senthil Sivakumar, Jaykishan Murji, Lightness D. Jacob, Frank Nyange, M. Banupriya, “Speech controlled automatic wheelchair”, Pan African International Conference on Information Science, Computing and Telecommunications, 2013

[8] Shraddha Uddhav Khadilkar, Narendra Wagdanikar, “Android phone controlled Voice, Gesture and Touch screen operated Smart Wheelchair”, IEEE, 2015.