Fully Integrated, Hall-Effect-Based Linear Current Sensor IC with 2.4 kV_{RMS} Isolation and a Low-Resistance Current Conductor

FEATURES AND BENEFITS

- Low-noise analog signal path
- Device bandwidth is set via the new FILTER pin
- 5 µs output rise time in response to step input current
- 80 kHz bandwidth
- Total output error 1.5% at T_A = 25°C
- Small footprint, low-profile SOIC-8 package
- 1.2 mΩ internal conductor resistance
- 2.4 kV_{RMS} minimum isolation voltage from pins 1-4 to pins 5-8
- 5.0 V, single supply operation
- 66 to 185 mV/A output sensitivity
- Output voltage proportional to AC or DC currents
- Factory-trimmed for accuracy
- Extremely stable output offset voltage
- Nearly zero magnetic hysteresis
- Ratiometric output from supply voltage

TÜV America
Certificate Number:
U8V 15 05 54214 038
CB 13 06 54214 026

PACKAGE: 8-Lead SOIC (suffix LC)

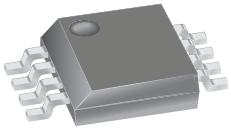

Not to scale

DESCRIPTION

The Allegro™ ACS712 provides economical and precise solutions for AC or DC current sensing in industrial, commercial, and communications systems. The device package allows for easy implementation by the customer. Typical applications include motor control, load detection and management, switch-mode power supplies, and overcurrent fault protection. The device is not intended for automotive applications.

The device consists of a precise, low-offset, linear Hall circuit with a copper conduction path located near the surface of the die. Applied current flowing through this copper conduction path generates a magnetic field which the Hall IC converts into a proportional voltage. Device accuracy is optimized through the close proximity of the magnetic signal to the Hall transducer. A precise, proportional voltage is provided by the low-offset, chopper-stabilized BiCMOS Hall IC, which is programmed for accuracy after packaging.

The output of the device has a positive slope (>$V_{IOUT(Q)}$) when an increasing current flows through the primary copper conduction path (from pins 1 and 2, to pins 3 and 4), which is the path used for current sampling. The internal resistance of this conductive path is 1.2 mΩ typical, providing low power loss. The thickness of the copper conductor allows survival of

Continued on the next page…

Typical Application

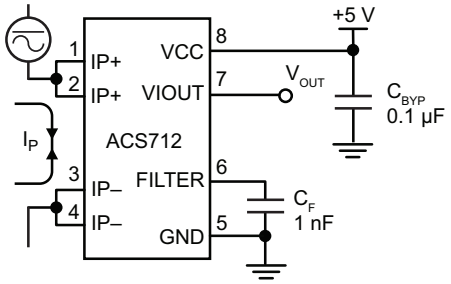

Application 1. The ACS712 outputs an analog signal, V_{OUT}, that varies linearly with the uni- or bi-directional AC or DC primary sampled current, I_P, within the range specified. C_F is recommended for noise management, with values that depend on the application.

DESCRIPTION (continued)

the device at up to 5× overcurrent conditions. The terminals of the conductive path are electrically isolated from the signal leads (pins 5 through 8). This allows the ACS712 to be used in applications requiring electrical isolation without the use of opto-isolators or other costly isolation techniques.

The ACS712 is provided in a small, surface mount SOIC8 package. The leadframe is plated with 100% matte tin, which is compatible with standard lead (Pb) free printed circuit board assembly processes. Internally, the device is Pb-free, except for flip-chip high-temperature Pb-based solder balls, currently exempt from RoHS. The device is fully calibrated prior to shipment from the factory.

SELECTION GUIDE

Part Number	Packing [1]	T_A (°C)	Current Sensing Range, I_P (A)	Sensitivity, Sens (Typ) (mV/A)
-S VARIANT [2]				
ACS712ELCTR-20A-S	Tape and reel, 3000 pieces/reel	–40 to 85	±20	100
ACS712ELCTR-30A-S	Tape and reel, 3000 pieces/reel	–40 to 85	±30	66
-T VARIANT [3]				
ACS712ELCTR-05B-T	Tape and reel, 3000 pieces/reel	–40 to 85	±5	185
ACS712ELCTR-20A-T	Tape and reel, 3000 pieces/reel	–40 to 85	±20	100
ACS712ELCTR-30A-T	Tape and reel, 3000 pieces/reel	–40 to 85	±30	66

[1] Contact Allegro for additional packing options.
[2] -S denotes the lead-free construction with tin-silver-based solder bumps.
[3] -T denotes Pb-contained construction with Pb-based solder bumps. Operating performance of -T and -S devices are identical. -T devices are RoHS compliant using allowed exemptions provided in Annex III and IV of Directive 2011/65/EU [Exemptions 7(a), 15, 15(a), as applicable].

ABSOLUTE MAXIMUM RATINGS

Characteristic	Symbol	Notes	Rating	Units
Supply Voltage	V_{CC}		8	V
Reverse Supply Voltage	V_{RCC}		–0.1	V
Output Voltage	V_{IOUT}		8	V
Reverse Output Voltage	V_{RIOUT}		–0.1	V
Output Current Source	$I_{IOUT(Source)}$		3	mA
Output Current Sink	$I_{IOUT(Sink)}$		10	mA
Overcurrent Transient Tolerance	I_P	1 pulse, 100 ms	100	A
Nominal Operating Ambient Temperature	T_A	Range E	–40 to 85	°C
Maximum Junction Temperature	T_J(max)		165	°C
Storage Temperature	T_{stg}		–65 to 170	°C

Allegro MicroSystems
955 Perimeter Road
Manchester, NH 03103-3353 U.S.A.
www.allegromicro.com

ISOLATION CHARACTERISTICS

Characteristic	Symbol	Notes	Rating	Unit
Withstand Voltage [1]	V_{ISO}	Agency rated for 60 seconds per UL 62368-1 (edition 3)	2400	V_{RMS}
Working Voltage for Basic Isolation	V_{WVBI}	Maximum approved working voltage for basic (single) isolation according to UL 62368-1 (edition 3)	420	V_{PK} or V_{DC}
			297	V_{RMS}
Impulse Withstand Voltage	$V_{IMPULSE}$	Tested ±5 pulses at 2/minute in compliance to IEC 61000-4-5, 1.2 µs (rise)/ 50 µs (width)	4000	V_{PK}
Clearance	D_{CL}	Minimum distance through air from IP leads to signal leads.	4	mm
Creepage	D_{CR}	Minimum distance along package body from IP leads to signal leads	4	mm
Distance Through Insulation	DTI	Minimum internal distance through insulation	63	µm
Comparative Tracking Index	CTI	Material Group II	400 to 599	V

[1] 100% Production-tested for 1 second in accordance with UL 62368-1 (edition 3).

Parameter	Specification
Fire and Electric Shock	CAN/CSA-C22.2 No. 60950-1-03 UL 60950-1:2003 EN 60950-1:2001

Allegro MicroSystems
955 Perimeter Road
Manchester, NH 03103-3353 U.S.A.
www.allegromicro.com

FUNCTIONAL BLOCK DIAGRAM

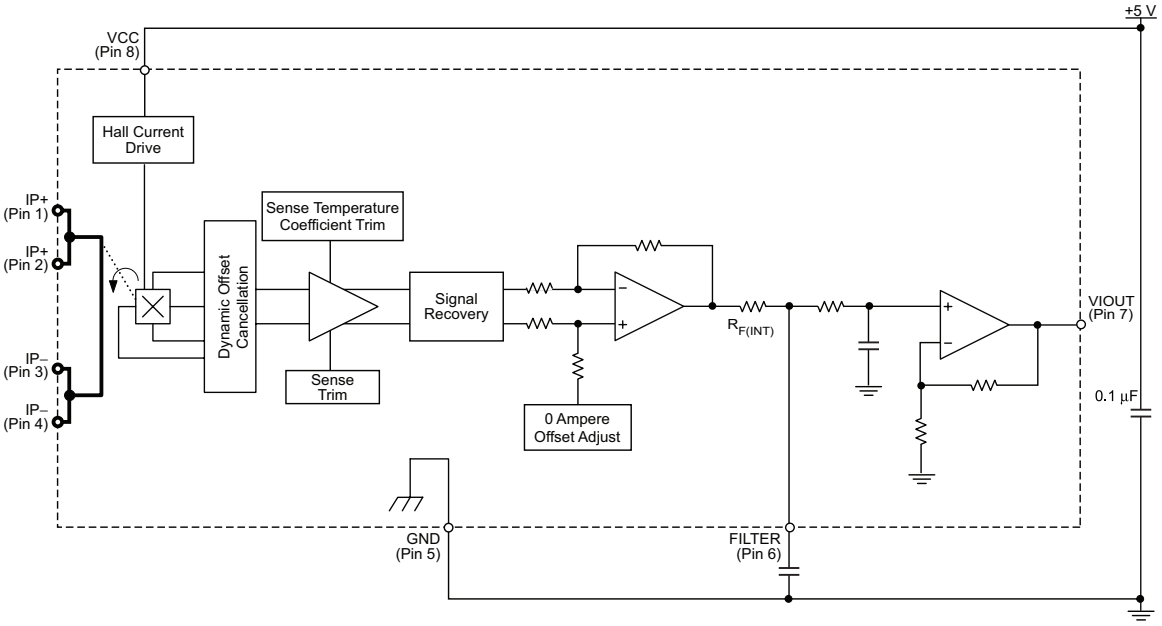

Pinout Diagram

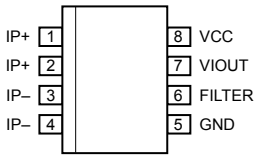

Terminal List

Number	Name	Description
1 and 2	IP+	Terminals for current being sampled; fused internally
3 and 4	IP–	Terminals for current being sampled; fused internally
5	GND	Signal ground terminal
6	FILTER	Terminal for external capacitor that sets bandwidth
7	VIOUT	Analog output signal
8	VCC	Device power supply terminal

Allegro MicroSystems
955 Perimeter Road
Manchester, NH 03103-3353 U.S.A.
www.allegromicro.com

COMMON OPERATING CHARACTERISTICS [1]: Over full range of T_A, C_F = 1 nF, and V_{CC} = 5 V, unless otherwise specified

Characteristic	Symbol	Test Conditions	Min.	Typ.	Max.	Units
ELECTRICAL CHARACTERISTICS						
Supply Voltage	V_{CC}		4.5	5.0	5.5	V
Supply Current	I_{CC}	V_{CC} = 5.0 V, output open	–	10	13	mA
Output Capacitance Load	C_{LOAD}	VIOUT to GND	–	–	10	nF
Output Resistive Load	R_{LOAD}	VIOUT to GND	4.7	–	–	kΩ
Primary Conductor Resistance	$R_{PRIMARY}$	T_A = 25°C	–	1.2	–	mΩ
Rise Time	t_r	$I_P = I_P$(max), T_A = 25°C, C_{OUT} = open	–	3.5	–	µs
Frequency Bandwidth	f	–3 dB, T_A = 25°C; I_P is 10 A peak-to-peak	–	80	–	kHz
Nonlinearity	E_{LIN}	Over full range of I_P	–	1.5	–	%
Symmetry	E_{SYM}	Over full range of I_P	98	100	102	%
Zero Current Output Voltage	$V_{IOUT(Q)}$	Bidirectional; I_P = 0 A, T_A = 25°C	–	V_{CC} × 0.5	–	V
Power-On Time	t_{PO}	Output reaches 90% of steady-state level, T_J = 25°C, 20 A present on leadframe	–	35	–	µs
Magnetic Coupling [2]			–	12	–	G/A
Internal Filter Resistance [3]	$R_{F(INT)}$			1.7		kΩ

[1] Device may be operated at higher primary current levels, I_P, and ambient, T_A, and internal leadframe temperatures, T_A, provided that the Maximum Junction Temperature, T_J(max), is not exceeded.

[2] 1G = 0.1 mT.

[3] $R_{F(INT)}$ forms an RC circuit via the FILTER pin.

COMMON THERMAL CHARACTERISTICS [1]

Characteristic	Symbol	Test Conditions	Min.	Typ.	Max.	Units
Operating Internal Leadframe Temperature	T_A	E range	–40	–	85	°C
Characteristic	**Symbol**	**Test Conditions**			**Value**	**Units**
Junction-to-Lead Thermal Resistance [2]	$R_{\theta JL}$	Mounted on the Allegro ASEK 712 evaluation board			5	°C/W
Junction-to-Ambient Thermal Resistance	$R_{\theta JA}$	Mounted on the Allegro 85-0322 evaluation board, includes the power consumed by the board			23	°C/W

[1] Additional thermal information is available on the Allegro website.

[2] The Allegro evaluation board has 1500 mm^2 of 2 oz. copper on each side, connected to pins 1 and 2, and to pins 3 and 4, with thermal vias connecting the layers. Performance values include the power consumed by the PCB. Further details on the board are available from the Frequently Asked Questions document on our website. Further information about board design and thermal performance also can be found in the Applications Information section of this datasheet.

Allegro MicroSystems
955 Perimeter Road
Manchester, NH 03103-3353 U.S.A.
www.allegromicro.com

x05B PERFORMANCE CHARACTERISTICS [1] : T_A = –40°C to 85°C, C_F = 1 nF, and V_{CC} = 5 V, unless otherwise specified

Characteristic	Symbol	Test Conditions	Min.	Typ.	Max.	Units
Optimized Accuracy Range	I_P		–5	–	5	A
Sensitivity	Sens	Over full range of I_P, T_A = 25°C	180	185	190	mV/A
Noise	$V_{NOISE(PP)}$	Peak-to-peak, T_A = 25°C, 185 mV/A programmed Sensitivity, C_F = 47 nF, C_{OUT} = open, 2 kHz bandwidth	–	21	–	mV
Zero Current Output Slope	$\Delta V_{OUT(Q)}$	T_A = –40°C to 25°C	–	–0.26	–	mV/°C
		T_A = 25°C to 150°C	–	–0.08	–	mV/°C
Sensitivity Slope	ΔSens	T_A = –40°C to 25°C	–	0.054	–	mV/A/°C
		T_A = 25°C to 150°C	–	–0.008	–	mV/A/°C
Total Output Error [2]	E_{TOT}	I_P =±5 A, T_A = 25°C	–	±1.5	–	%

[1] Device may be operated at higher primary current levels, I_P, and ambient temperatures, T_A, provided that the Maximum Junction Temperature, $T_{J(max)}$, is not exceeded.
[2] Percentage of I_P, with I_P = 5 A. Output filtered.

x20A PERFORMANCE CHARACTERISTICS [1] T_A = –40°C to 85°C, C_F = 1 nF, and V_{CC} = 5 V, unless otherwise specified

Characteristic	Symbol	Test Conditions	Min.	Typ.	Max.	Units
Optimized Accuracy Range	I_P		–20	–	20	A
Sensitivity	Sens	Over full range of I_P, T_A = 25°C	96	100	104	mV/A
Noise	$V_{NOISE(PP)}$	Peak-to-peak, T_A = 25°C, 100 mV/A programmed Sensitivity, C_F = 47 nF, C_{OUT} = open, 2 kHz bandwidth	–	11	–	mV
Zero Current Output Slope	$\Delta V_{OUT(Q)}$	T_A = –40°C to 25°C	–	–0.34	–	mV/°C
		T_A = 25°C to 150°C	–	–0.07	–	mV/°C
Sensitivity Slope	ΔSens	T_A = –40°C to 25°C	–	0.017	–	mV/A/°C
		T_A = 25°C to 150°C	–	–0.004	–	mV/A/°C
Total Output Error [2]	E_{TOT}	I_P =±20 A, T_A = 25°C	–	±1.5	–	%

[1] Device may be operated at higher primary current levels, I_P, and ambient temperatures, T_A, provided that the Maximum Junction Temperature, T_J(max), is not exceeded.
[2] Percentage of I_P, with I_P = 20 A. Output filtered.

x30A PERFORMANCE CHARACTERISTICS [1]: T_A = –40°C to 85°C, C_F = 1 nF, and V_{CC} = 5 V, unless otherwise specified

Characteristic	Symbol	Test Conditions	Min.	Typ.	Max.	Units
Optimized Accuracy Range	I_P		–30	–	30	A
Sensitivity	Sens	Over full range of I_P, T_A = 25°C	63	66	69	mV/A
Noise	$V_{NOISE(PP)}$	Peak-to-peak, T_A = 25°C, 66 mV/A programmed Sensitivity, C_F = 47 nF, C_{OUT} = open, 2 kHz bandwidth	–	7	–	mV
Zero Current Output Slope	$\Delta V_{OUT(Q)}$	T_A = –40°C to 25°C	–	–0.35	–	mV/°C
		T_A = 25°C to 150°C	–	–0.08	–	mV/°C
Sensitivity Slope	ΔSens	T_A = –40°C to 25°C	–	0.007	–	mV/A/°C
		T_A = 25°C to 150°C	–	–0.002	–	mV/A/°C
Total Output Error [2]	E_{TOT}	I_P = ±30 A, T_A = 25°C	–	±1.5	–	%

[1] Device may be operated at higher primary current levels, I_P, and ambient temperatures, T_A, provided that the Maximum Junction Temperature, T_J(max), is not exceeded.
[2] Percentage of I_P, with I_P = 30 A. Output filtered.

Allegro MicroSystems
955 Perimeter Road
Manchester, NH 03103-3353 U.S.A.
www.allegromicro.com

CHARACTERISTIC PERFORMANCE

I_P = 5 A, unless otherwise specified

Mean Supply Current versus Ambient Temperature

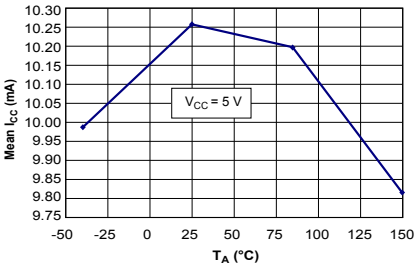

Supply Current versus Supply Voltage

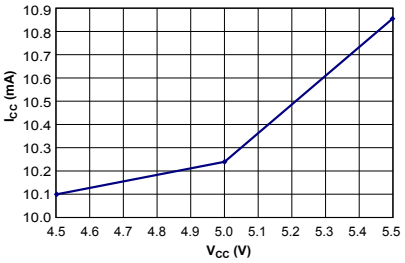

Magnetic Offset versus Ambient Temperature

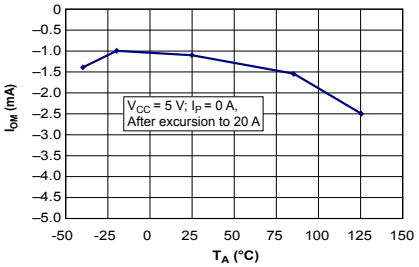

Nonlinearity versus Ambient Temperature

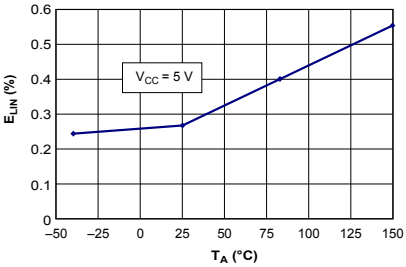

Mean Total Output Error versus Ambient Temperature

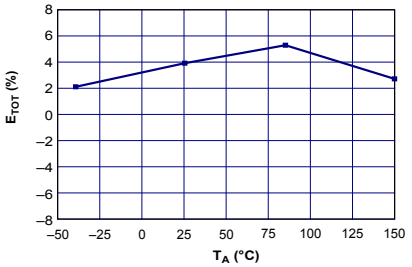

Sensitivity versus Ambient Temperature

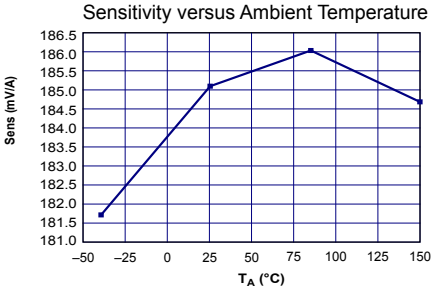

Output Voltage versus Sensed Current

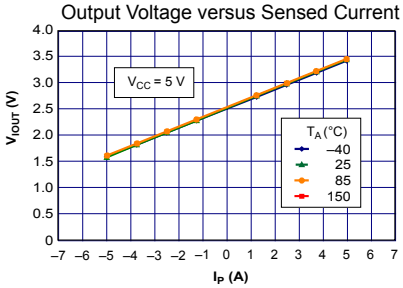

Sensitivity versus Sensed Current

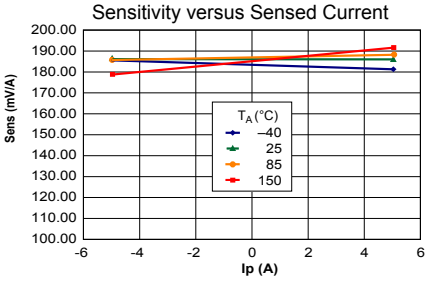

0 A Output Voltage versus Ambient Temperature

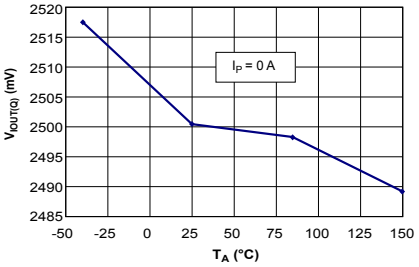

0 A Output Voltage Current versus Ambient Temperature

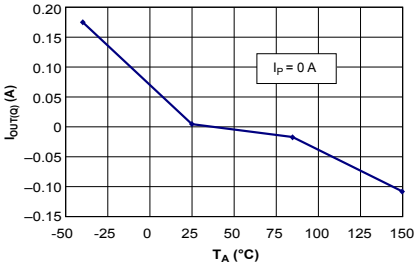

Allegro MicroSystems
955 Perimeter Road
Manchester, NH 03103-3353 U.S.A.
www.allegromicro.com

CHARACTERISTIC PERFORMANCE

I_P = 20 A, unless otherwise specified

Mean Supply Current versus Ambient Temperature

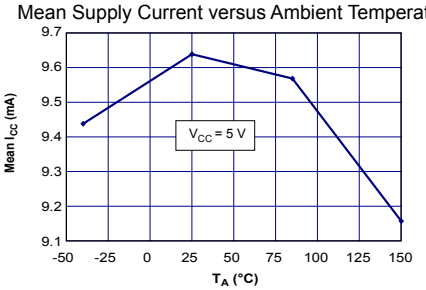

Supply Current versus Supply Voltage

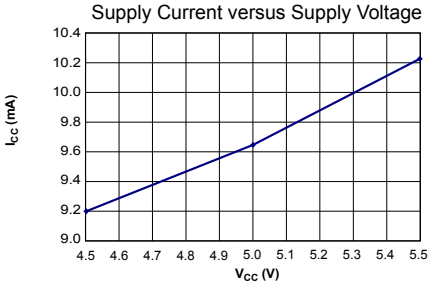

Magnetic Offset versus Ambient Temperature

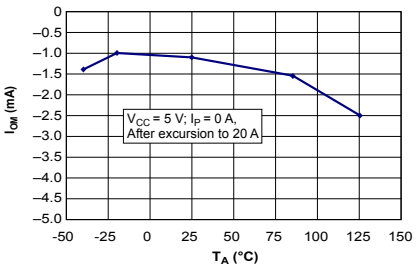

Nonlinearity versus Ambient Temperature

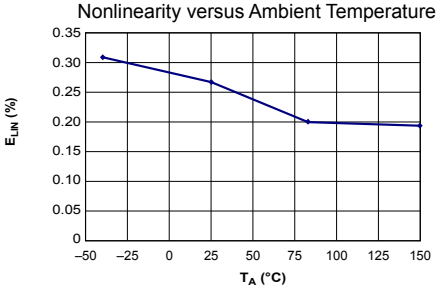

Mean Total Output Error versus Ambient Temperature

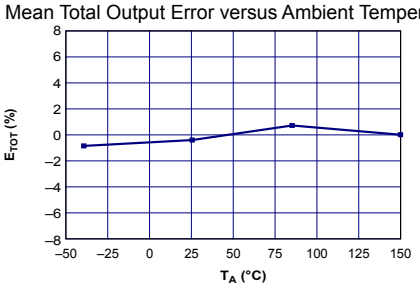

Sensitivity versus Ambient Temperature

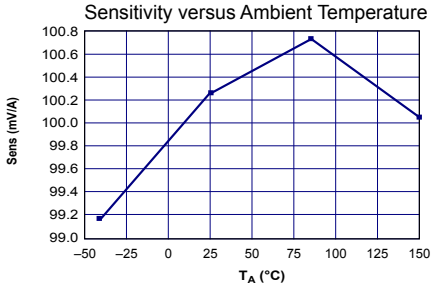

Output Voltage versus Sensed Current

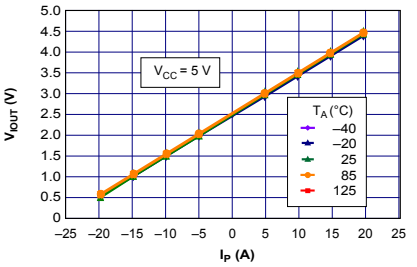

Sensitivity versus Sensed Current

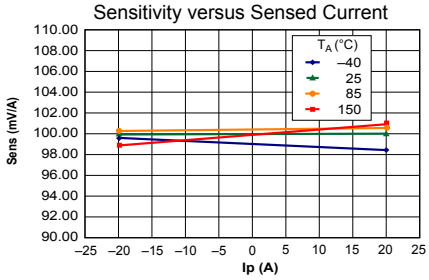

0 A Output Voltage versus Ambient Temperature

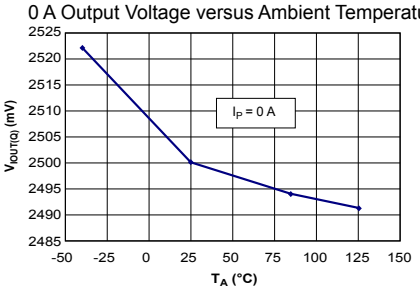

0 A Output Voltage Current versus Ambient Temperature

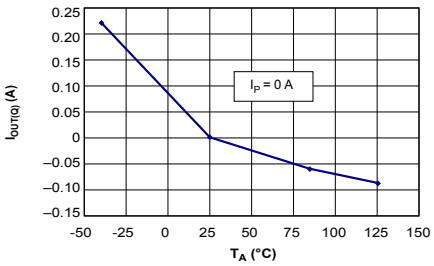

Allegro MicroSystems
955 Perimeter Road
Manchester, NH 03103-3353 U.S.A.
www.allegromicro.com

CHARACTERISTIC PERFORMANCE

I_P = 30 A, unless otherwise specified

Mean Supply Current versus Ambient Temperature

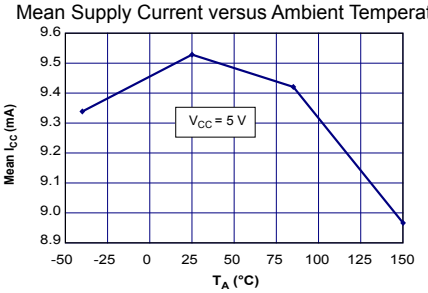

Supply Current versus Supply Voltage

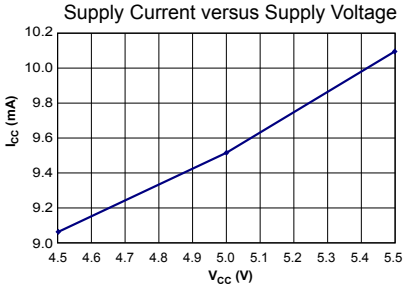

Magnetic Offset versus Ambient Temperature

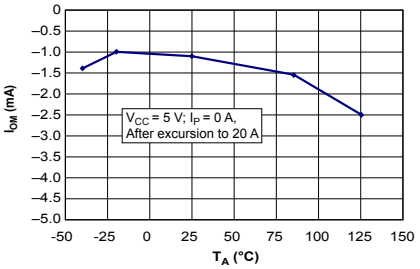

Nonlinearity versus Ambient Temperature

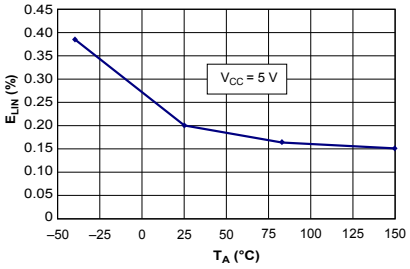

Mean Total Output Error versus Ambient Temperature

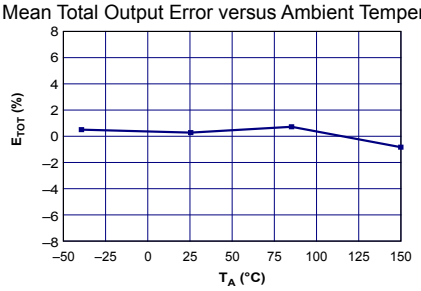

Sensitivity versus Ambient Temperature

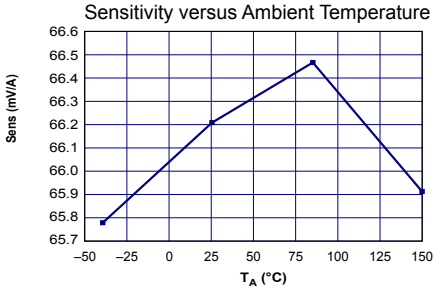

Output Voltage versus Sensed Current

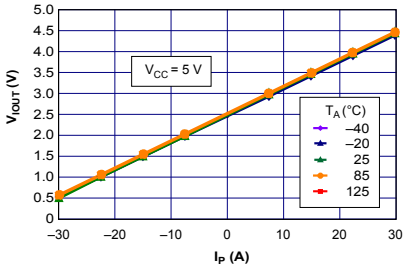

Sensitivity versus Sensed Current

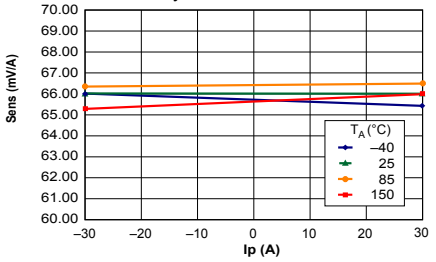

0 A Output Voltage versus Ambient Temperature

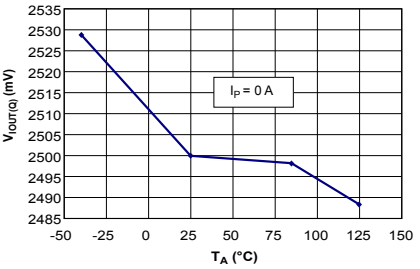

0 A Output Voltage Current versus Ambient Temperature

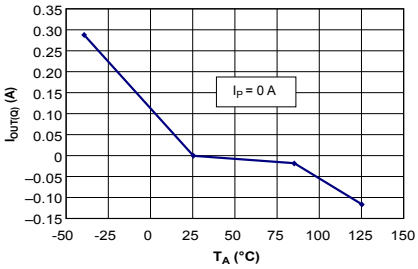

Allegro MicroSystems
955 Perimeter Road
Manchester, NH 03103-3353 U.S.A.
www.allegromicro.com

DEFINITIONS OF ACCURACY CHARACTERISTICS

Sensitivity (Sens). The change in device output in response to a 1 A change through the primary conductor. The sensitivity is the product of the magnetic circuit sensitivity (G/A) and the linear IC amplifier gain (mV/G). The linear IC amplifier gain is programmed at the factory to optimize the sensitivity (mV/A) for the full-scale current of the device.

Noise (V_{NOISE}). The product of the linear IC amplifier gain (mV/G) and the noise floor for the Allegro Hall effect linear IC (≈1 G). The noise floor is derived from the thermal and shot noise observed in Hall elements. Dividing the noise (mV) by the sensitivity (mV/A) provides the smallest current that the device is able to resolve.

Linearity (E_{LIN}). The degree to which the voltage output from the IC varies in direct proportion to the primary current through its full-scale amplitude. Nonlinearity in the output can be attributed to the saturation of the flux concentrator approaching the full-scale current. The following equation is used to derive the linearity:

$$100\left\{1-\left[\frac{\Delta\text{ gain}\times\%\text{ sat}\,(V_{\text{IOUT_full-scale amperes}}-V_{\text{IOUT(Q)}})}{2\,(V_{\text{IOUT_half-scale amperes}}-V_{\text{IOUT(Q)}})}\right]\right\}$$

where $V_{\text{IOUT_full-scale amperes}}$ = the output voltage (V) when the sampled current approximates full-scale $\pm I_P$.

Symmetry (E_{SYM}). The degree to which the absolute voltage output from the IC varies in proportion to either a positive or negative full-scale primary current. The following formula is used to derive symmetry:

$$100\left(\frac{V_{\text{IOUT_+ full-scale amperes}}-V_{\text{IOUT(Q)}}}{V_{\text{IOUT(Q)}}-V_{\text{IOUT_–full-scale amperes}}}\right)$$

Quiescent output voltage ($V_{IOUT(Q)}$). The output of the device when the primary current is zero. For a unipolar supply voltage, it nominally remains at $V_{CC}/2$. Thus, V_{CC} = 5 V translates into $V_{IOUT(Q)}$ = 2.5 V. Variation in $V_{IOUT(Q)}$ can be attributed to the resolution of the Allegro linear IC quiescent voltage trim and thermal drift.

Electrical offset voltage (V_{OE}). The deviation of the device output from its ideal quiescent value of $V_{CC}/2$ due to nonmagnetic causes. To convert this voltage to amperes, divide by the device sensitivity, Sens.

Accuracy (E_{TOT}). The accuracy represents the maximum deviation of the actual output from its ideal value. This is also known as the total output error. The accuracy is illustrated graphically in the output voltage versus current chart at right.

Accuracy is divided into four areas:

- **0 A at 25°C.** Accuracy at the zero current flow at 25°C, without the effects of temperature.
- **0 A over Δ temperature.** Accuracy at the zero current flow including temperature effects.
- **Full-scale current at 25°C.** Accuracy at the full-scale current at 25°C, without the effects of temperature.
- **Full-scale current over Δ temperature.** Accuracy at the full-scale current flow including temperature effects.

Ratiometry. The ratiometric feature means that its 0 A output, $V_{IOUT(Q)}$, (nominally equal to $V_{CC}/2$) and sensitivity, Sens, are proportional to its supply voltage, V_{CC}. The following formula is used to derive the ratiometric change in 0 A output voltage, $\Delta V_{IOUT(Q)RAT}$ (%).

$$100\left(\frac{V_{\text{IOUT(Q)VCC}}/V_{\text{IOUT(Q)5V}}}{V_{\text{CC}}/5\text{ V}}\right)$$

The ratiometric change in sensitivity, $\Delta Sens_{RAT}$ (%), is defined as:

$$100\left(\frac{Sens_{\text{VCC}}/Sens_{\text{5V}}}{V_{\text{CC}}/5\text{ V}}\right)$$

Output Voltage versus Sampled Current

Accuracy at 0 A and at Full-Scale Current

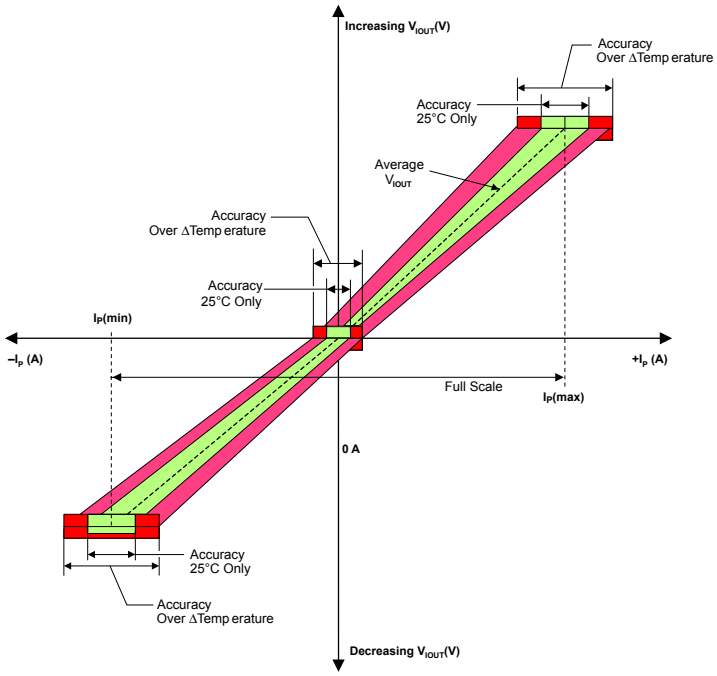

Allegro MicroSystems
955 Perimeter Road
Manchester, NH 03103-3353 U.S.A.
www.allegromicro.com

DEFINITIONS OF DYNAMIC RESPONSE CHARACTERISTICS

Power-On Time (t_{PO}). When the supply is ramped to its operating voltage, the device requires a finite time to power its internal components before responding to an input magnetic field. Power-On Time, t_{PO} , is defined as the time it takes for the output voltage to settle within ±10% of its steady state value under an applied magnetic field, after the power supply has reached its minimum specified operating voltage, V_{CC}(min), as shown in the chart at right.

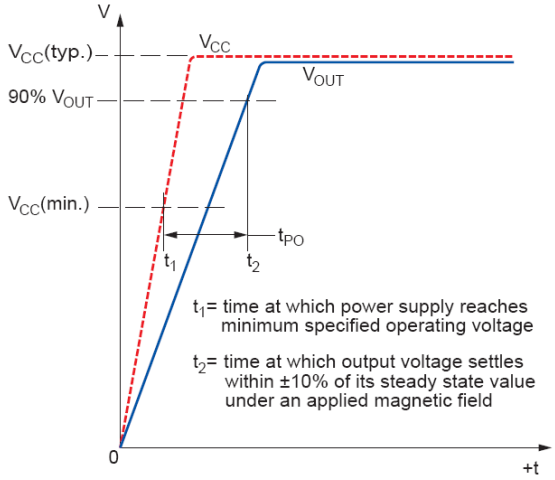

Rise time (t_r). The time interval between a) when the device reaches 10% of its full-scale value, and b) when it reaches 90% of its full scale value. The rise time to a step response is used to derive the bandwidth of the device, in which $f(-3\ dB) = 0.35/t_r$. Both t_r and $t_{RESPONSE}$ are detrimentally affected by eddy current losses observed in the conductive IC ground plane.

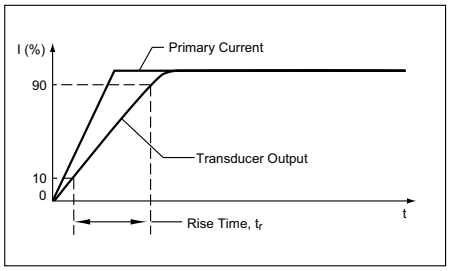

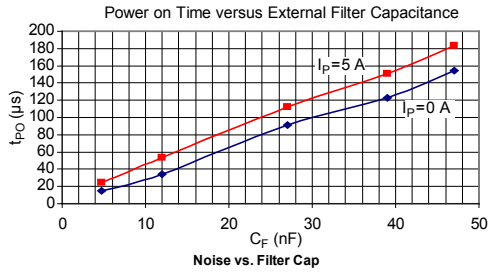

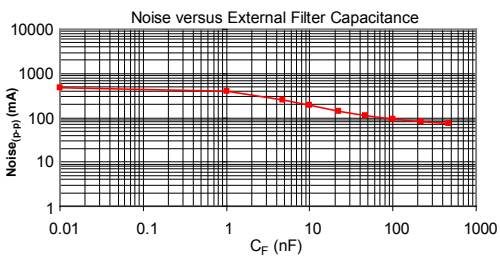

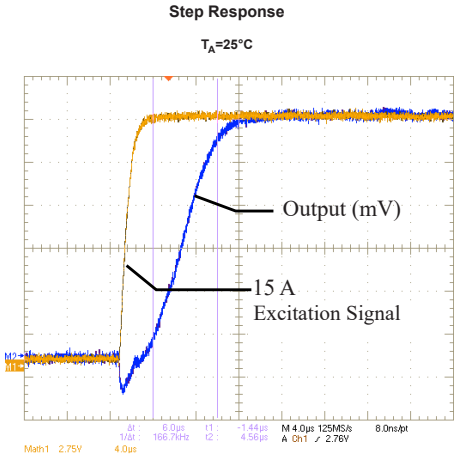

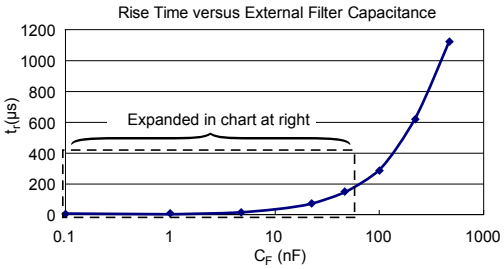

C_F (nF)	t_r (µs)
Open	3.5
1	5.8
4.7	17.5
22	73.5
47	88.2
100	291.3
220	623
470	1120

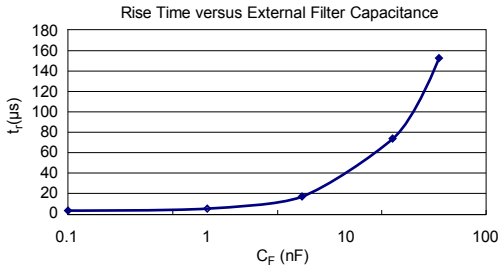

Allegro MicroSystems
955 Perimeter Road
Manchester, NH 03103-3353 U.S.A.
www.allegromicro.com

CHOPPER STABILIZATION TECHNIQUE

Chopper Stabilization is an innovative circuit technique that is used to minimize the offset voltage of a Hall element and an associated on-chip amplifier. Allegro has a Chopper Stabilization technique that nearly eliminates Hall IC output drift induced by temperature or package stress effects. This offset reduction technique is based on a signal modulation-demodulation process. Modulation is used to separate the undesired DC offset signal from the magnetically induced signal in the frequency domain. Then, using a low-pass filter, the modulated DC offset is suppressed while the magnetically induced signal passes through the filter. As a result of this chopper stabilization approach, the output voltage from the Hall IC is desensitized to the effects of temperature and mechanical stress. This technique produces devices that have an extremely stable Electrical Offset Voltage, are immune to thermal stress, and have precise recoverability after temperature cycling.

This technique is made possible through the use of a BiCMOS process that allows the use of low-offset and low-noise amplifiers in combination with high-density logic integration and sample and hold circuits.

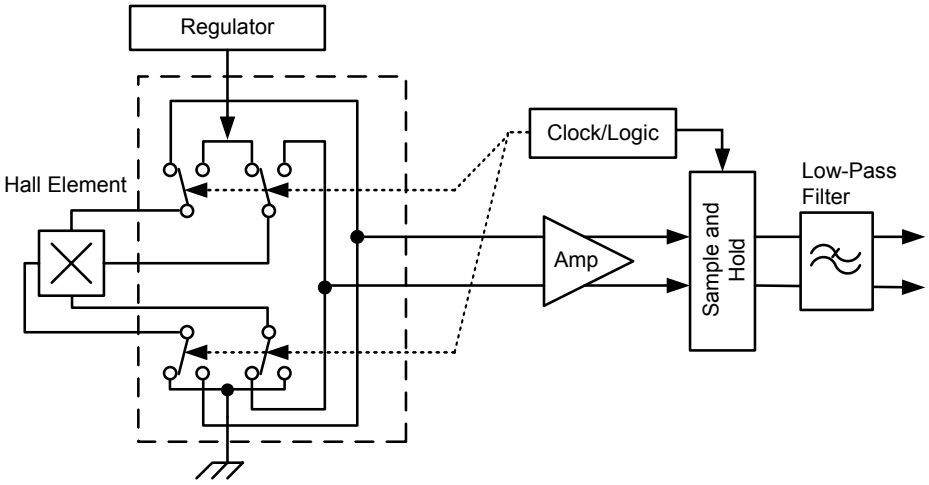

Concept of Chopper Stabilization Technique

Allegro MicroSystems
955 Perimeter Road
Manchester, NH 03103-3353 U.S.A.
www.allegromicro.com

TYPICAL APPLICATIONS

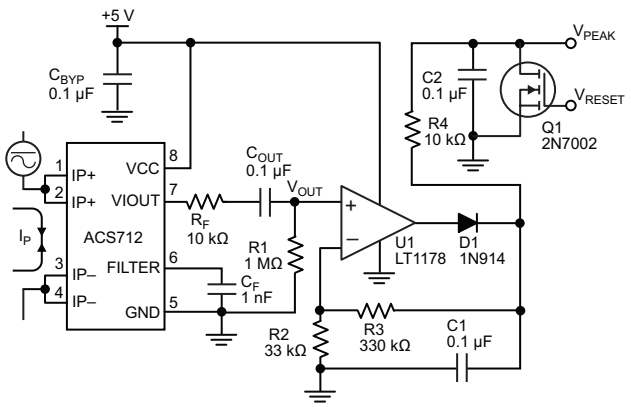

Application 2. Peak Detecting Circuit

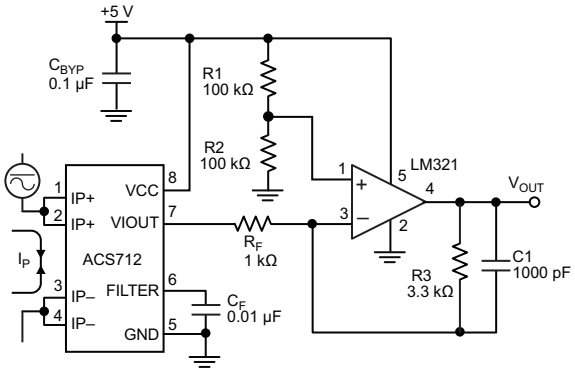

Application 3. This configuration increases gain to 610 mV/A (tested using the ACS712ELC-05A).

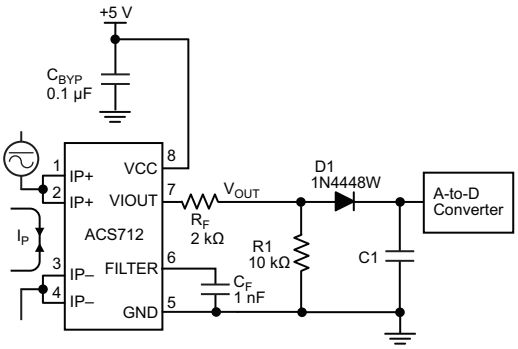

Application 4. Rectified Output. 3.3 V scaling and rectification application for A-to-D converters. Replaces current transformer solutions with simpler ACS circuit. C1 is a function of the load resistance and filtering desired. R1 can be omitted if the full range is desired.

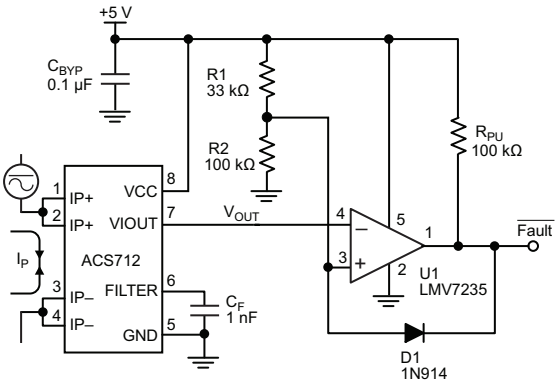

Application 5. 10 A Overcurrent Fault Latch. Fault threshold set by R1 and R2. This circuit latches an overcurrent fault and holds it until the 5 V rail is powered down.

Allegro MicroSystems
955 Perimeter Road
Manchester, NH 03103-3353 U.S.A.
www.allegromicro.com

IMPROVING SENSING SYSTEM ACCURACY USING THE FILTER PIN

In low-frequency sensing applications, it is often advantageous to add a simple RC filter to the output of the device. Such a low-pass filter improves the signal-to-noise ratio, and therefore the resolution, of the device output signal. However, the addition of an RC filter to the output of a sensor IC can result in undesirable device output attenuation — even for DC signals.

Signal attenuation, ΔV_{ATT}, is a result of the resistive divider effect between the resistance of the external filter, R_F (see Application 6), and the input impedance and resistance of the customer interface circuit, R_{INTFC}. The transfer function of this resistive divider is given by:

$$\Delta V_{ATT} = V_{IOUT}\left(\frac{R_{INTFC}}{R_F + R_{INTFC}}\right) .$$

Even if R_F and R_{INTFC} are designed to match, the two individual resistance values will most likely drift by different amounts over temperature. Therefore, signal attenuation will vary as a function of temperature. Note that, in many cases, the input impedance, R_{INTFC}, of a typical analog-to-digital converter (ADC) can be as low as 10 kΩ.

The ACS712 contains an internal resistor, a FILTER pin connection to the printed circuit board, and an internal buffer amplifier. With this circuit architecture, users can implement a simple RC filter via the addition of a capacitor, C_F (see Application 7) from the FILTER pin to ground. The buffer amplifier inside of the ACS712 (located after the internal resistor and FILTER pin connection) eliminates the attenuation caused by the resistive divider effect described in the equation for ΔV_{ATT}. Therefore, the ACS712 device is ideal for use in high-accuracy applications that cannot afford the signal attenuation associated with the use of an external RC low-pass filter.

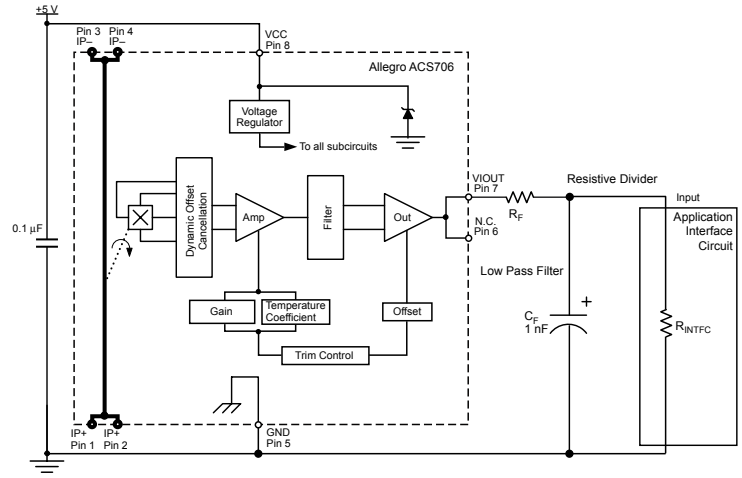

Application 6. When a low pass filter is constructed externally to a standard Hall effect device, a resistive divider may exist between the filter resistor, R_F, and the resistance of the customer interface circuit, R_{INTFC}. This resistive divider will cause excessive attenuation, as given by the transfer function for ΔV_{ATT}.

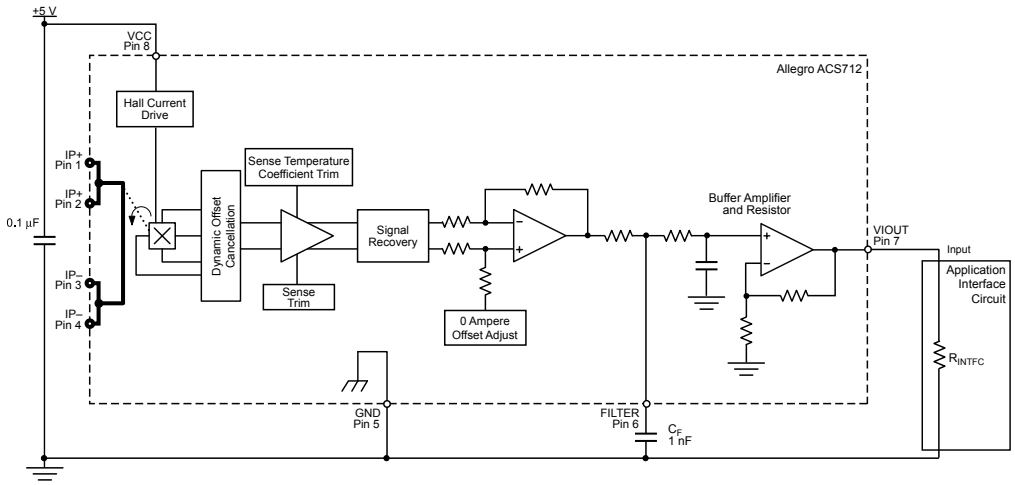

Application 7. Using the FILTER pin provided on the ACS712 eliminates the attenuation effects of the resistor divider between R_F and R_{INTFC}, shown in Application 6.

Allegro MicroSystems
955 Perimeter Road
Manchester, NH 03103-3353 U.S.A.
www.allegromicro.com

Package LC, 8-pin SOIC

For Reference Only; not for tooling use
(reference Allegro DWG-0000385, Rev. 2 or JEDEC MS-012AA)
Dimensions in millimeters – Not to scale
Dimensions exclusive of mold flash, gate burrs, and dambar protrusions
Exact case and lead configuration at supplier discretion within limits shown

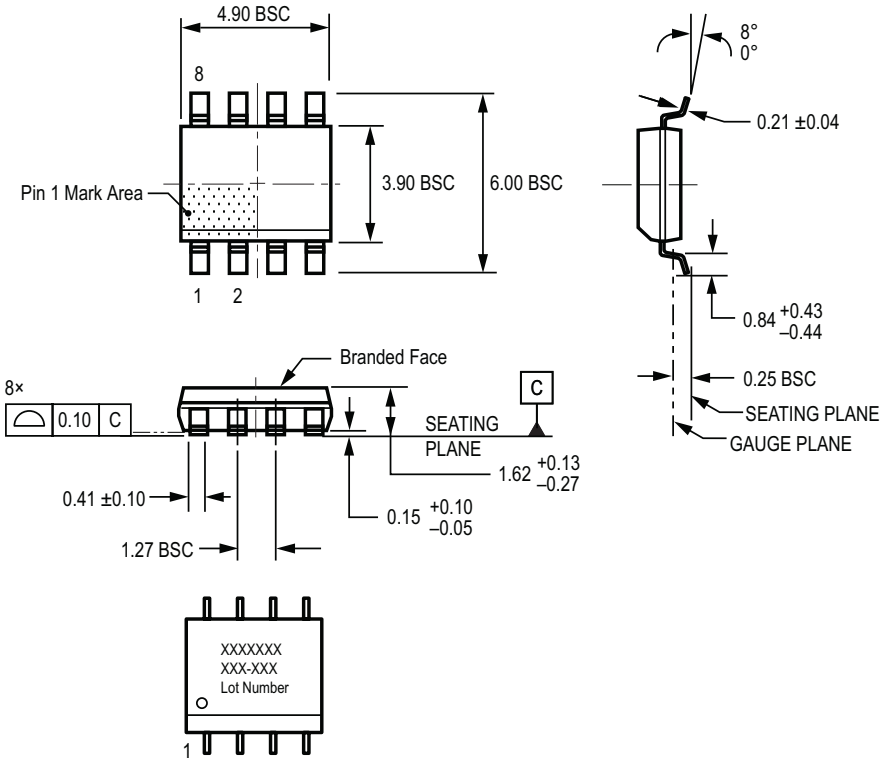

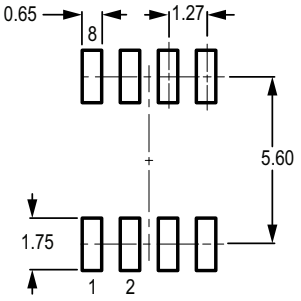

PCB Layout Reference View
Reference land pattern layout
(reference IPC7351 SOIC127P600X175-8M);
all pads a minimum of 0.20 mm from all adjacent pads;
adjust as necessary to meet application process
requirements and PCB layout tolerances.

Standard Branding Reference View

Lines 1, 2 = 8 characters
Line 3 = 5 characters

Line 1: Part Number
Line 2: Temp, Pkg - Amps
Line 3: First 5 Characters of Assembly Lot Number

Belly Brand: Country of Origin, Lot Number

Branding scale and appearance at supplier discretion

Allegro MicroSystems
955 Perimeter Road
Manchester, NH 03103-3353 U.S.A.
www.allegromicro.com

REVISION HISTORY

Number	Date	Description
15	November 16, 2012	Update rise time and isolation, I_{OUT} reference data, patents
16	June 5, 2017	Updated product status
17	December 10, 2018	Updated certificate numbers
18	May 17, 2019	Updated TUV certificate mark, and minor editorial updates
19	January 30, 2020	Updated product status and minor editorial updates
20	February 7, 2022	Updated package drawing (page 14)
21	February 9, 2023	Updated selection guide heading (page 2)
22	February 13, 2024	Updated Selection Guide (page 2) and Isolation Characteristics (page 3); removed patent information (page 16)

Copyright 2024, Allegro MicroSystems.

Allegro MicroSystems reserves the right to make, from time to time, such departures from the detail specifications as may be required to permit improvements in the performance, reliability, or manufacturability of its products. Before placing an order, the user is cautioned to verify that the information being relied upon is current.

Allegro's products are not to be used in any devices or systems, including but not limited to life support devices or systems, in which a failure of Allegro's product can reasonably be expected to cause bodily harm.

The information included herein is believed to be accurate and reliable. However, Allegro MicroSystems assumes no responsibility for its use; nor for any infringement of patents or other rights of third parties which may result from its use.

Copies of this document are considered uncontrolled documents.

For the latest version of this document, visit our website:

www.allegromicro.com

Allegro MicroSystems
955 Perimeter Road
Manchester, NH 03103-3353 U.S.A.
www.allegromicro.com