Anchorage Design for Petrochemical and Other Industrial Facilities

SECOND EDITION

Task Committee on Anchorage Design

ASCE

@seismicisolation

Anchorage Design for Petrochemical and Other Industrial Facilities

Second Edition

@seismicisolation
@seismicisolation

Other Titles of Interest

Design of Blast-Resistant Buildings in Petrochemical Facilities: Second Edition, edited by William L. Bounds. (ASCE/Energy Division, 2010). This report provides general guidelines for the structural design of blast-resistant petrochemical facilities, updating the 1997 original edition. (ISBN 978-0-7844-1088-2)

Seismic Evaluation and Design of Petrochemical and Other Industrial Facilities: Third Edition, by the Task Committee on Seismic Evaluation and Design of Petrochemical Facilities. (ASCE/Energy Division, 2020). This report offers practical recommendations regarding the design and safety of new and existing petrochemical facilities during and following an earthquake. (ISBN 978-0-7844-1548-1)

Wind Load Design for Petrochemical and Other Industrial Facilities: Second Edition, by the Task Committee on Wind-Induced Forces. (ASCE/Energy Division, 2020). This report provides state-of-the-practice guidelines for the computation of wind-induced forces on industrial facilities with structural features outside the scope of current codes and standards. (ISBN 978-0-7844-1561-0)

Design of Secondary Containment in Petrochemical Facilities, by the Task Committee on Secondary Containment. (ASCE/Energy Division, 1997). This technical report provides guidelines for the design of secondary containment and leak detection systems in petrochemical and other industrial facilities. (ISBN 978-0-7844-8136-3)

@seismicisolation
@seismicisolation

Anchorage Design for Petrochemical and Other Industrial Facilities

Second Edition

Task Committee on Anchorage Design

Sponsored by the
Energy Division of the American Society of Civil Engineers

ASCE

Published by the American Society of Civil Engineers

@seismicisolation
@seismicisolation

Library of Congress Cataloging-in-Publication Data

Cataloging-in-Publication Data on file with the Library of Congress

Published by American Society of Civil Engineers
1801 Alexander Bell Drive
Reston, Virginia 20191-4382
www.asce.org/bookstore | ascelibrary.org

Any statements expressed in these materials are those of the individual authors and do not necessarily represent the views of ASCE, which takes no responsibility for any statement made herein. No reference made in this publication to any specific method, product, process, or service constitutes or implies an endorsement, recommendation, or warranty thereof by ASCE. The materials are for general information only and do not represent a standard of ASCE, nor are they intended as a reference in purchase specifications, contracts, regulations, statutes, or any other legal document. ASCE makes no representation or warranty of any kind, whether express or implied, concerning the accuracy, completeness, suitability, or utility of any information, apparatus, product, or process discussed in this publication, and assumes no liability therefor. The information contained in these materials should not be used without first securing competent advice with respect to its suitability for any general or specific application. Anyone utilizing such information assumes all liability arising from such use, including but not limited to infringement of any patent or patents.

ASCE and American Society of Civil Engineers—Registered in US Patent and Trademark Office.

Photocopies and permissions. Permission to photocopy or reproduce material from ASCE publications can be requested by sending an email to permissions@asce.org or by locating a title in the ASCE Library (https://ascelibrary.org) and using the "Permissions" link.

***Errata:* Errata, if any, can be found at https://doi.org/10.1061/9780784416051.**

Copyright © 2022 by the American Society of Civil Engineers.
All Rights Reserved.

ISBN 978-0-7844-1605-1 (print)
ISBN 978-0-7844-8417-3 (PDF)
ISBN 978-0-7844-8423-4 (ePub)

Manufactured in the United States of America.

27 26 25 24 23 22 1 2 3 4 5

This work is provided by Process Industry Practices (PIP) to ASCE, with permission to reproduce for print and electronic editions of ASCE's *Anchorage Design for Petrochemical and Other Industrial Facilities, Second Edition*, with worldwide distribution, provided this notice and attribution is retained. All other rights reserved.

@seismicisolation

Contents

Petrochemical Energy Committee xi

Task Committee on Anchorage Design xiii

Notation xv

Chapter 1 Introduction 1
- 1.1 Background 1
- 1.2 Objectives and Scope 1
- 1.3 Updates and Additions to Previous Report 2
- 1.4 Codes and Design Procedures 4
- 1.5 State of Research 5
- 1.6 Future Research 7
- References 8

Chapter 2 Materials 11
- 2.1 Introduction 11
- 2.2 Anchor Bolt and Rod Assemblies 11
  - 2.2.1 Anchor Bolts, Studs, and Rods 11
  - 2.2.2 Washers 14
  - 2.2.3 Nuts 14
  - 2.2.4 Sleeves 14
  - 2.2.5 Fabrication 14
- 2.3 Headed Studs 16
- 2.4 Post-Installed Anchors 16
- 2.5 Shear Lugs 17
- 2.6 Corrosion 17
  - 2.6.1 Environmental Conditions 18
  - 2.6.2 Codes and Specifications 18
  - 2.6.3 Corrosion Rates 19
  - 2.6.4 Coatings 19
  - 2.6.5 Weathering Steel 21
- 2.7 Anchorage Exposed to Extreme Temperatures 22
  - 2.7.1 Exposure to Low Temperatures 22
  - 2.7.2 Exposure to Elevated Temperatures 23
  - 2.7.3 Exposure to Fire 24
- References 24

@seismicisolation

Chapter 3 Cast-in-Place Anchor Design 27
3.1 Introduction 27
3.2 Anchor Configuration and Dimensions 28
3.2.1 Configuration of Cast-in-Place Anchors 28
3.2.2 Minimum Dimensions 29
3.2.3 Sleeves 30
3.2.4 Anchor Details and Minimum Dimensions 35
3.3 Strength Design 35
3.3.1 General 35
3.3.2 Design Procedure for Anchorage Design of Column Pedestals 37
3.3.3 Anchor Design Considerations 39
3.3.4 Concrete Breakout Strength of a Group of Anchors in a Rectangular Pattern in Shear 40
3.3.5 Concrete Breakout Strength in Shear of a Group of Anchors in a Circular Pattern 40
3.4 Ductile Design 41
3.5 Anchor Reinforcement Design 42
3.5.1 Background 42
3.5.2 Reinforcement Methods 44
3.5.3 Reinforcement Design to Transfer Anchor Forces 45
3.5.4 Tables to Aid Responsible Engineers in Reinforcement Design 62
3.6 Frictional Resistance and Transmitting of Shear Force into Anchors 69
3.6.1 General 69
3.6.2 Calculating Resisting Friction Force 70
3.7 Shear Lug Design 71
3.7.1 General 71
3.7.2 Design Procedure for Plate Shear Lug 71
3.8 Tensioning 72
3.8.1 General 72
3.8.2 Advantages 74
3.8.3 Disadvantages 74
3.8.4 Tension Load 75
3.8.5 Concrete Failure 76
3.8.6 Vessel Anchor Chair Failure 76
3.8.7 Stretching Length 76
3.8.8 Tensioning Methods 77
3.8.9 Relaxation 80
3.8.10 Tightening Sequence 82
3.8.11 Monitoring Tension 82
3.9 Welded Anchors for Embedded Plates 83
3.9.1 General 83
3.9.2 Headed Stud Anchors 83

@seismicisolation

3.9.3 Headed Anchor Rods ... 83
3.9.4 Rebar Anchors ... 83
3.9.5 Tension Considerations ... 84
3.9.6 Shear Considerations ... 84
3.9.7 Interaction of Tensile and Shear Forces ... 85
3.9.8 Seismic Considerations ... 85
3.9.9 Examples of Design of Welded Anchors for Embedded Plates ... 85
3.10 Considerations for Vibratory Loads ... 85
3.10.1 General ... 85
3.10.2 Rules for Avoiding Fatigue Failure ... 86
3.11 Considerations for Seismic Loads ... 87
3.11.1 General ... 87
3.11.2 Connections Designed in accordance with AISC 341-16 ... 93
3.11.3 Nonstructural Components ... 93
3.11.4 Pedestal Anchorage ... 93
3.11.5 Seismic Design of Vertical Vessel Anchors ... 94
3.11.6 Other Anchorage Seismic Design Considerations ... 97
3.12 Constructability Considerations ... 98
3.13 Anchor Plates ... 102
3.13.1 Background ... 102
3.13.2 Anchor Plate Standards ... 103
References ... 106

Chapter 4 Post-Installed Anchor Design ... 109
4.1 Introduction ... 109
4.2 Post-Installed Mechanical Anchors ... 109
4.2.1 Expansion Anchors ... 109
4.2.2 Undercut Anchors ... 110
4.2.3 Screw Anchors ... 112
4.3 Post-Installed Grouted and Bonded Anchors ... 113
4.3.1 Grouted Headed Anchors ... 113
4.3.2 Adhesive Anchors ... 114
4.3.3 Torque-Controlled Adhesive Anchors ... 115
4.4 Considerations in Post-Installed Anchor Design ... 116
4.4.1 Loading Type and Direction ... 117
4.4.2 Required Edge Distances, Anchor Spacing, Embedment Depth, and Anchor Length ... 117
4.4.3 Concrete Quality and Condition ... 118
4.4.4 Installation Conditions ... 118
4.4.5 Exposure to Weather, Temperature Fluctuations, Chemicals, and Fire ... 118
4.4.6 Importance of the Connection and Consequences of Failure ... 119
4.5 Post-Installed Anchor Design ... 119

@seismicisolation

4.5.1 Allowable Stress Design 119
4.5.2 Strength Design 119
4.5.3 Ductility of Post-Installed Anchors 120
4.6 Seismic Loading 121
4.7 Design for High-Cycle Fatigue 122
4.8 Post-Installed Anchor Qualification 122
4.9 Design of Post-installed Reinforcing Bar Connections 122
References 123

Chapter 5 Installation and Repair 125
5.1 Introduction 125
5.2 Cast-in-Place Anchor Installation 125
5.3 Post-Installed Anchor Installation 126
5.3.1 Mechanical Anchors 126
5.3.2 Grouted Anchors 127
5.3.3 Adhesive Anchors 127
5.3.4 Large Adhesive Anchors 128
5.4 Constructability Considerations 129
5.4.1 Implementation of Quality Plan 129
5.4.2 Cast-in-Place Anchor Inspection Plan 130
5.4.3 Post-Installed Anchor Inspection Plan 130
5.4.4 Specific Construction Practices and Safety Considerations 131
5.5 Repair Procedures 132
5.5.1 Misalignment Issues 133
5.5.2 Inadequate Anchor Projection 134
5.5.3 Excessive Anchor Projection 137
5.5.4 Material Property Issues 137
5.5.5 Failure to Tape Pretensioned Anchors 137
5.5.6 Interference with Existing Reinforcement 138
References 139

Appendix: Examples 141
Example 1: Anchor Design for Column Pedestals 141
Base Plate Connection Data 141
Pedestal Data 141
Concrete Breakout Strength of an Anchor Group in Tension (N_{cbg}) 144
Pullout Strength of the Anchor in Tension (Crushing of Concrete Under Head) (N_{pn}) 145
Concrete Side-Face Blowout Strength of Headed Anchor in Tension (N_{sb}) 145
Check the Pedestal for Friction Transferred from the Base Plate 145
Concrete Pryout Strength of Anchors in Shear, V_{cpg} 147
Tension and Shear Interaction 147
Example 2: Anchor Design for Column Pedestals 148

@seismicisolation

Maximum Total Factored Loads (According to Section 5.3 of ACI 318-19 and Section 2.3 of ASCE/SEI 7-16) 148
Pedestal Data 149
Anchors 150
Reinforcing Bars 150
Design Assumptions 150
Design Steps 150
Check the Pullout Resistance of Anchor in Tension 151
Transfer of Anchor Load to Vertical Rebars 152
Amount of Vertical Reinforcing Steel 152
Development Length 153
Strut-and-Tie Method for Tension Loading (Chapter 3, Section 3.5.3.1.4 of This Book) 155
Design of Shear Reinforcement 156
Use the Concept of Concrete Breakout Cone 156
Use the Concept of Strut-and-Tie Method Approach (Chapter 3, Section 3.5.3.2.2 of This Book) 156
Example 3: Anchor Design for Octagonal Pedestal 161
Example 4: Shear Lug Plate Section Design 168
Calculate the Nominal Bearing Strength of the Shear Lug, $V_{brg,sl}$ 169
Calculate Concrete Breakout Strength of Shear Lug, $V_{cb,sl}$ 170
Concrete Breakout Strength of the Anchor Group in Tension (N_{cbg}) 171
Example 5: Shear Lug Pipe Section Design 172
Design Data 172
Calculate the Nominal Bearing Strength of the Shear Lug Pipe Section, $V_{brg,sl}$ 174
Calculate Concrete Breakout Strength of Shear Lug Pipe Section, $V_{cb,sl}$ 174
Concrete Breakout Strength of the Anchor Group in Tension (N_{cbg}) 177
Check Steel Design of Shear Lug Pipe Section 178
Example 6: Anchorage Design for Column Pedestals 179
References 180

Glossary 183

Index 185

@seismicisolation

@seismicisolation
@seismicisolation

Petrochemical Energy Committee

This publication began as one of the five state-of-the-practice engineering reports produced by the ASCE Petrochemical Energy Committee. These engineering reports were intended to be a summary of current engineering knowledge and design practice and present guidelines for the design of petrochemical facilities. They represented a consensus opinion of task committee members active in their development. These five ASCE engineering reports were initially published in 1997 in four separate reports, with the reports on wind and anchor bolts being printed together in a combined document for publishing convenience, and they are

Design of Blast-Resistant Buildings in Petrochemical Facilities
Guidelines for Seismic Evaluation and Design of Petrochemical Facilities
Wind Loads for Petrochemical and Other Industrial Facilities
Anchorage Design for Petrochemical Facilities
Design of Secondary Containment in Petrochemical Facilities

Building codes and standards have changed significantly since the publication of these five reports, specifically in the calculation of wind and seismic loads and analysis procedures for anchorage design. In addition, new research in these areas and in blast-resistant design has provided opportunities for improvement of the recommended guidelines. ASCE has determined the need to update four of the original reports and publish new editions based on the latest research and for consistency with current building codes and standards.

The Petrochemical Energy Committee was reorganized in 2005, and the following four task committees were formed to update their respective reports:

- Task Committee on Anchorage Design for Petrochemical Facilities
- Task Committee on Blast Design for Petrochemical Facilities
- Task Committee on Seismic Evaluation and Design for Petrochemical Facilities
- Task Committee on Wind-Induced Forces

In 2012, ASCE published a subsequent version of the *Anchorage Design for Petrochemical Facilities*. However, because the 1997 edition of the report was published in a combined document with *Wind Loads for Petrochemical and Other industrial Facilities*, and the 2012 version of the report was a standalone document, that version was denoted as a first edition.

@seismicisolation

Since the publication of the first edition in 2012, notable updates to relevant design codes and standards cited in the report have been issued. As a result, in 2019, the Energy Division Executive Committee directed that a task committee be formed to update the report to ensure consistency with current building codes and standards. That effort has resulted in the current book, *Anchorage Design for Petrochemical and Other Industrial Facilities*, Second Edition.

@seismicisolation

Task Committee on Anchorage Design

This book is intended to be a state-of-the-practice set of guidelines. It is based on reviews of current practice, internal company standards, published documents, and the work of related organizations. The report includes references that provide additional information, commercial publications, and government reports.

In preparing the second edition, an effort was made to evaluate the impacts of published reference data, research development, and code changes that have occurred since the creation of the 2012 technical report. It is the hope of the task committee that this report will continue to serve as a source for uniformity in the design, fabrication, and installation of anchorage in the petrochemical and other industrial facilities.

This report should interest engineers with the responsibility for designing anchorage for equipment and structures, and operating company personnel responsible for establishing internal design, fabrication, and construction practices.

The Task Committee acknowledges the work of Process Industry Practices (PIP) (http://www.pip.org, 3925 West Braker Lane(R4500), Austin, Texas 78759) for providing much of the information used in this report, as well as previous editions.

Committee Members

Hongchun Liu, P.E., *Chair*	Bechtel Corp.
Justin Glover, *Secretary*	Hilti Inc.
Donald W. Boyd, *PIP Consultant*	PIP
Francisco J. Brenes, Ph.D., P.E.	Bechtel Corp.
John F. Silva, P.E., S.E.	Hilti Inc.
Eric H. Wey, P.E., S.E.	Fluor Corp.
Widianto, Ph.D., P.E.	ExxonMobil
Silky S. K. Wong, Ph.D., P.E., S.E.	Dow Inc.

In helping create a consensus set of guidelines, the following individuals provided valuable assistance in the context of an independent peer review of the entire manuscript. The committee is extremely appreciative of their efforts.

Peter Carrato, Ph.D., P.E., S.E. (Retired)	Bechtel Corp.
Ron Mase	Fluor Corp.

The Task Committee would like to acknowledge the assistance of Ibro Vehabovic, P.E., CDI Engineering Solutions, with the AutoCAD and Word conversion for many of the figures included in the book. The Task Committee would also like to acknowledge the assistance of Nicolette Corrao, EIT, Bechtel Corp., with the compilation of Example Problems 2 and 3 in Appendix: Examples.

@seismicisolation

@seismicisolation
@seismicisolation

Notation

$A_{\text{bearing_anc}}$	Assumed bearing area of a compression strut on an anchor in a strut-and-tie model for shear, in.^{2} (mm^2)
A_{brg}	Net bearing area of the head, bearing nut, or bearing plate of a stud or anchor, in.^{2} (mm^2)
A_d	Nominal area of an anchor, in.^{2} (mm^2)
A_{Nc}	Projected concrete failure area of a single anchor or a group of anchors for the calculation of strength in tension, in.^{2} (mm^2)
A_{Nco}	Projected concrete failure area of a single anchor for the calculation of strength in tension if not limited by edge distance or spacing, in.^{2} (mm^2)
AP	Anchor plate
A_p	Pedestal area, in.^{2} (mm^2)
A_{req}	Bearing area required for a shear lug, in.^{2} (mm^2)
A_s	Area of nonprestressed longitudinal tension reinforcement, in.^{2} (mm^2)
$A_{se,N}$	Effective cross-sectional area of an anchor in tension, in.^{2} (mm^2)
$A_{se,V}$	Effective cross-sectional area of an anchor in shear, in.^{2} (mm^2)
A_{se_tie}	Area of one leg of tie reinforcement, in.^{2} (mm^2)
A_{st}	Minimum required area of longitudinal nonprestressed reinforcement, in.^{2} (mm^2)
A_{Vc}	Projected concrete failure area of a single anchor, a group of anchors, or a shear lug for the calculation of the strength in shear, in.^{2} (mm^2)
A_{Vco}	Projected concrete failure area of a single anchor, for the calculation of the strength in shear, if not limited by corner influences, spacing, or member thickness, in.^{2} (mm^2)
A_w	Area of a weld, in.^{2} (mm^2)
b_1	Pedestal dimension in one direction, in. (mm)
b_2	Pedestal dimension in the direction perpendicular to b_1, in. (mm)
C	Cover distance to the top of a rebar, in. (mm)
C_d	Ratio of deflection of a vertical vessel owing to deflection from elastic analysis to total deflection
$c_{a,\max}$	Maximum distance from the center of an anchor shaft to the edge of concrete, in. (mm)
$c_{a,\min}$	Minimum distance from the center of an anchor shaft to the edge of concrete, in. (mm)
c_{a1}	Distance from the center of an anchor shaft to the edge of concrete in one direction, in. (mm). If shear is applied to the anchor, c_{a1} is taken in the direction of the applied shear. If tension is applied to the anchor, c_{a1} is the minimum edge distance.

@seismicisolation

c_{a2}	Distance from the center of an anchor shaft to the edge of concrete in the direction perpendicular to c_{a1}, in. (mm)
c_{a3}	Distance from the center of an anchor shaft to the edge of the effective tensile stress area toward the center of an octagon-shaped concrete pedestal, in. (mm). *See* Example 2.
c_{a4}	Distance from the center of an anchor shaft to the edge of the effective tensile stress area opposite to c_{a2} of an octagon-shaped concrete pedestal, in. (mm). *See* Example 2.
D	Vertical dead load, lbs (N); diameter of a pipe or weld, in. (mm)
D_{bc}	Bolt circle diameter, in. (mm)
D_p	Face-to-face dimension of a pedestal, ft (m)
d	Depth of a column in. (mm)
d_a	Outside diameter of the anchor or the shaft diameter of the headed stud, headed bolt, or hooked bolt, in. (mm)
d_{actual}	Actual distance between an anchor and reinforcing bars under consideration, in. (mm)
d_b	Nominal diameter of a rebar, in. (mm)
d_{max}	Maximum distance between an anchor and reinforcing bars where the reinforcing bars can be considered to be effective for resisting anchor tension, in. (mm)
d_s	Diameter of a sleeve shell, in. (mm)
d_{tie}	Nominal diameter of a tie reinforcement bar, in. (mm)
E_{sh}	Coefficient for shrinkage, in./in. (mm/mm)
E_v	Vertical component of a seismic load, kips (kN)
$EA_{\text{bearing_rebar}}$	Assumed bearing area of a compression strut on a reinforcing bar in a strut-and-tie model for a shear, in.^{2} (mm^2)
F	Side-face blowout force, kips (kN)
F_c	Compression force at anchors, kips (kN)
F_{cor}	Factor to modify the side-face blowout near a corner
F_{EXX}	Electrode classification number, ksi (MPa)
F_W	Nominal strength of weld metal per unit area, ksi (MPa)
F_r	Maximum horizontal dynamic force, kips (kN)
F_t	Tension force at anchors, kips (kN)
F_y	Specified yield strength of structural steel, psi (kPa)
f'_c	Specified compressive strength of concrete, psi (kPa)
$f_{cc,200}$	Concrete compressive strength based on a 200-mm cube, psi (kPa)
f_{ce}	Effective compressive strength of concrete in a strut or nodal zone (Strut-and-Tie Model [STM]), psi (kPa)
f_t	Desired tensile stress in anchor owing to tensioning, psi (kPa)
f_{uta}	Specified tensile strength of anchor steel, psi (kPa)
f_w	Weld stress, ksi (MPa)
f_y	Specified yield strength of reinforcement, psi (kPa)
f_{ya}	Specified yield strength of anchor steel, psi (kPa)
G	Grout thickness, in. (mm)

@seismicisolation

H	Height of the pipe used for a shear lug, in.; the height of a vertical vessel, in. (mm)
h	Distance from the center of a seismic load on a vertical vessel to the bottom of the vertical vessel base plate, in. (mm)
h_{ef}	Effective embedment depth of an anchor, in. (mm)
h_e'	Minimum nut-sleeve clearance, in. (mm)
h_{ef}'	Limiting value of h_{ef} when anchors are located less than 1.5 h_{ef} from three or more edges, in. (mm)
h_s	Height of a sleeve, in. (mm)
I	Importance factor
k_c	Coefficient for basic concrete breakout strength in tension
L	Length of an anchor, in. (mm); the length of a weld, Figure 5-5, in. (mm)
LA	Lever arm between the centroid of tension loads on anchors and the centroid of the compression load, in. (mm)
L_g	Grip dimension of an anchor bolt, in. (mm)
L_{stretch}	Anchor stretch length (the distance between the top and the bottom nuts on the anchor), in. (mm)
L_t	Thread length at the bottom of an anchor, in. (mm)
l_d	Development length in the tension of reinforcement, in. (mm)
l_{da}	Available development length of reinforcement, in. (mm)
l_{dh}	Development length in the tension of reinforcement with a standard hook, in. (mm)
l_{dha}	Available development length of a hairpin, in. (mm)
l_e	Load-bearing length of an anchor for shear, in. (mm)
M_n	Nominal flexural strength, k-in. (kN-mm)
M_u	Factored overturning moment, k-ft (kN-m)
M_u^E	Factored overturning moment at the vessel base owing to the seismic effect acting alone, k-ft (kNm)
N_{arf}	Tension to be taken by anchor reinforcement, lb (N)
N_b	Basic concrete breakout strength in the tension of a single anchor in cracked concrete, lb (N)
N_{cb}	Nominal concrete breakout strength in the tension of a single anchor, lb (N)
N_{cbg}	Nominal concrete breakout strength in the tension of a group of anchors, lb (N)
N_{dse}	Controlling tension for ductile steel element failure, lb (N)
N_n	Nominal strength in tension, lb (N)
N_p	Pullout strength in the tension of a single anchor in cracked concrete, lb (N)
N_{pn}	Nominal pullout strength in the tension of a single anchor owing to the crushing of concrete under an anchor head, lb (N)
N_{sa}	Nominal strength of a single anchor or a group of anchors in tension as governed by the steel strength, lb (N)
N_{sb}	Side-face blowout strength of a single anchor, lb (N)
N_{sbg}	Side-face blowout strength of a group of anchors, lb (N)

@seismicisolation

N_u	Factored axial normal to cross-section occurring simultaneously with Vu or Tu; to be taken as a positive for the compression applied and negative for tension, lb (N)
N_{ua}	Factored tensile force applied to an anchor or a group of anchors, lb (N)
n or n_a	Number of anchors
n_layers	Required number of layers of ties to resist the resultant of the radial horizontal component of diagonal concrete struts (assumed to be similar to side-face blowout force)
n_t	Anchor threads per in. (mm)
P_u^E	Factored compression force at the top of a pedestal owing to the seismic effect acting alone (including the vertical component of a seismic load acting upward), lb (N)
P_u	Normal factored compression force, lb (N)
p	Bearing pressure on the head of an anchor, psi (kPa)
r	Radius, in. (mm)
S_p	Face dimension of an octagonal pedestal, ft (m)
S_x	Section modulus of a weld, in.^{3} (mm^3)
s	Center-to-center spacing of anchors, reinforcement, or other items in one direction, in. (mm)
s_1	Center-to-center spacing of anchors in one direction, in. (mm)
s_2	Center-to-center spacing of anchors in the direction perpendicular to s_1, in. (mm)
T, T_1	Tensile force on a tie, lb (N)
T_u^E	Factored tension design load from load combinations that include an overstrength factor of 2.5 applied to seismic loads (per anchor), lb (N)
T_2	Tensile force on a hairpin, lb (N)
t	Wall thickness of a pipe; the thickness of a weld, in. (mm)
t_f	Flange thickness
V_b	Basic concrete breakout strength in the shear of a single anchor in a cracked section, lb (N)
V_{cb}	Nominal concrete breakout strength in the shear of a single anchor or a shear lug, lb (N)
V_{cbg}	Nominal concrete breakout strength in the shear of a group of anchors, lb (N)
V_{cp}	Nominal concrete pryout strength of a single anchor, lb (N)
V_{dse}	Controlling shear for ductile steel element failure, lb (N)
V_f	Resisting friction force, lb (N)
V_n	Nominal shear strength, lb (N)
V_{sa}	Nominal strength in the shear of a single anchor or a group of anchors as governed by the steel strength, lb (N)
V_u	Factored shear force at a section, lb (N)
V_{ua}	Factored shear force applied to a single anchor, a group of anchors, or a shear lug, lb (N)
W_a	Equipment weight at an anchor location, lb (N)
W_e	Vessel empty weight, lb (N)

@seismicisolation

W_o	Vessel operating weight, lb (N)
Z	Plastic section modulus, in.^{3} (mm^3)
z	Vertical hairpin concrete cover + $0.5d_b$, in. (mm); also, the internal lever arm between the centroid of anchors in tension and the centroid of a compression force on foundation, in. (mm)
α	Ratio of F to N_{ua}
β_n	Factor to account for the effect of the anchorage of ties on the effective compressive strength of a nodal zone
Δ_A	Amplified displacement at the top of a vertical vessel, in. (mm)
Δ_a	Amount of stretch in an anchor, in. (mm)
Δ_{ie}	Inelastic portion of displacement at the top of a vertical vessel, in. (mm)
Δ_s	Deflection at the top of a vertical vessel from elastic analysis, in. (mm)
λ	Modification factor related to the unit weight of concrete
λ_p	Limiting slenderness parameter for a compact element
μ	Coefficient of friction
ϕ	Strength reduction factor
	Strength reduction factor, tension loads
ϕ_V	Strength reduction factor, shear loads
ϕ_b	Resistance factor for flexure (structural steel)
ϕ_s	Strength reduction factor used for anchor reinforcement design
ϕ_v	Resistance factor for shear (structural steel)
$\Psi_{c,P}$	Factor used to modify the pullout strength of anchors based on the presence or absence of cracks in concrete
$\Psi_{c,V}$	Factor used to modify the shear strength of anchors based on the presence or absence of cracks in concrete and the presence or absence of supplementary reinforcement
$\Psi_{c,N}$	Factor used to modify the tensile strength of anchors based on the presence or absence of cracks in concrete
$\Psi_{cp,N}$	Factor used to modify the tensile strength of post-installed anchors intended for use in uncracked concrete without supplementary reinforcement
Ψ_e	Factor used to modify the development length because of reinforcement coating
$\Psi_{ec,N}$	Factor used to modify the tensile strength of anchors based on the eccentricity of applied loads
$\Psi_{ec,V}$	Factor used to modify the shear strength of anchors based on the eccentricity of applied loads
$\Psi_{ed,N}$	Factor used to modify the tensile strength of anchors based on proximity to the edges of a concrete member
$\Psi_{ed,V}$	Factor used to modify the shear strength of anchors based on proximity to the edges of a concrete member
$\Psi_{m,N}$	Modification factor for an overturning moment
Ψ_t	Factor used to modify the development length based on the reinforcement location
Ω_o	Seismic overstress factor

@seismicisolation

@seismicisolation
@seismicisolation

CHAPTER 1
Introduction

1.1 BACKGROUND

Petrochemical and other industrial engineering firms and owner companies commonly use extrapolations and interpretations of the code provisions provided by the American Concrete Institute (ACI), the American Institute of Steel Construction (AISC), ASCE, and other standards development organizations as the basis for the design of anchorage systems. This committee's work has been influenced by the continuing need to establish a uniform anchorage design methodology that is acceptable for use throughout petrochemical and other industrial facilities.

1.2 OBJECTIVES AND SCOPE

The objective of this committee has been to update the previous versions of this publication, summarizing the state-of-the-practice for the design of cast-in-place anchors, welded anchors, and post-installed anchors as used in petrochemical and other industrial facilities.

The specific objectives were to

1. Present petrochemical and other industrial facilities anchorage design methods for tension and shear transfer into concrete with reinforcement and other embedments;
2. Summarize anchorage materials and properties;
3. Present current practices for fabrication and installation of anchorage;
4. Present recommendations for post-installed anchors;
5. Make comprehensive recommendations for cast-in-place anchor design, which are appropriate for use in petrochemical and other industrial facilities;
6. Present recommended constructability and repair practices.

@seismicisolation

The committee recognizes that, although several different types of anchorage systems are used in petrochemical and other industrial facilities, the most common include the following components: cast-in-place anchors, welded anchors, post-installed anchors, grout pockets, and shear lugs. Anchors themselves may include threaded bolts, nonthreaded studs, rods, rebars, embedments, and other structural shapes. The focus of this book is on the most common of these: threaded bolts typically fabricated from various steel grades with or without embedded heads, washers, sleeves, and wedges. The committee limited its investigation and recommendations to these common types. This self-imposed limit should not be construed as an attempt to limit the importance of other types of anchorage systems. Instead, this limit allowed the committee to focus attention on the most commonly used devices.

1.3 UPDATES AND ADDITIONS TO PREVIOUS REPORT

Throughout the document, references to "petrochemical facilities" (shown in both ASCE 1997 and 2013 editions of this book) have been changed to "petrochemical and other industrial facilities." This is to reflect the fact that this document can be used as a guide for other industries such as power, manufacturing, and other heavy industries for the design of anchorages.

ACI 318 [interchangeably in this document with ACI 318M (ACI 2019b), the metric unit version of ACI 318] is the most important document referenced in this book. The version of the ACI 318 code that was used in the previous version (published in 2013) was ACI 318-08 (ACI 2008). There have been several updates to ACI 318 since the publication of ACI 318-08. Updates to ACI 318 were made in ACI (2011a, 2014, 2019a). All work in this book is based on ACI 318-19. Process Industry Practices (PIP) has in the past provided, and will continue in the future, to provide, interim updates for revisions of the ACI 318/ACI 318M code and other references as required between publications of this book in PIP STE05121, *Application of ASCE Anchorage Design for Petrochemical Facilities* (PIP 2018).

One of the main changes in ACI 318 that first occurred in the 2014 version and remained in the 2019 version was that all anchorage requirements were moved from Appendix D to Chapter 17. Also, the organization of Chapter 17 was revised, and so all references had to be changed for this book. Another significant change was in the seismic requirements for anchorages (anchors can no longer be designed to be ductile in shear). In addition, ACI 318-19 has requirements for the design of shear lugs, which previous versions left to other codes (primarily ACI 349-13) (ACI 2013). The changes in shear lug design based on ACI 318-19 require bigger pedestals than previously required with ACI 349-13. The larger pedestals can be avoided if reinforcing steel is added and properly designed to prevent concrete breakout in shear from the shear lugs.

Chapter 2 includes revisions to Table 2-1 and Table 2-2 to change the weldability requirements for ASTM F1554 (ASTM 2020) Grade 55 and Grade 105

@seismicisolation

to meet the latest requirements of ACI 318 and PCA Notes on ACI 318-11 (PCA 2011). Additional notes have been added to Tables 2-1 and 2-2 covering threading of anchor rods, hot-dip galvanizing, and substitution of ASTM F1554 Grade 55 anchors for Grade 36 anchors.

Chapter 3 has been expanded to include much of the work that was developed by the Civil Structural Architectural Function Team of PIP, which includes the following:

- Added Section 3.2.4, including Figure 3-3 and Tables 3-1 and 3-2. These provide anchor details and minimum dimensions (including cross-sectional areas, head and nut dimensions, thread lengths, minimum embedment depths, edge distances, spacing, and sleeve information) in both US customary and metric (SI) units for all standard rod sizes from 5/8 to 3 in. (16 to 72 mm) diameters.
- Added Section 3.5.4, including Tables 3-3 to 3-6. These tables are design aids to the Responsible Engineer for reinforcement design. Tables 3-3 and 3-4 show reinforcing steel tensile capacities and tensile development lengths for various concrete covers in US customary and metric (SI) units, respectively. Tables 3-5 and 3-6 show the details of standard hook and hairpin reinforcing steel along with their capacities in US customary and metric (SI) units, respectively.
- Table 3-9 has been added to Section 3.12. This provides the installation tolerances for anchors and other embedments.
- Table 3-10 has also been added to Section 3.12. This provides information to determine appropriate anchor hole diameters in base plates and whether plate washers are required beneath the nut on the anchor rod.
- Section 3.13 on anchor plates has been added. Anchor plates are required because the pull-out strength of a headed bolt or nut on a threaded rod is typically less than 1.2 times the nominal steel strength of the anchor rod. So, without an anchor plate, the anchor rod cannot be used for ductile design (required for seismic). Also, even in nonductile situations, the capacity of the anchorage is reduced if there is no anchor plate. PIP has developed standard anchor plates to resist the tensile capacity of most sizes and yield strengths of anchor rods and bolts. Figure 3-28 shows the anchor plate detail, and Tables 3-11 and 3-12 provide the diameters and thicknesses of the anchor plates in US customary and metric (SI) units.

Other changes have also been made to Chapter 3 as follows:

- To ascertain concrete failure in a bolt group subject to overturning, an additional factor can be included to account for the beneficial effect of the compression under the baseplate on the breakout capacity. This is shown in Section 3.3.3.
- Section 3.6.2 on calculating resisting friction force has been revised, using the latest information from ACI 349-13.

@seismicisolation

- Section 3.7.2 on shear lugs has been added to comply with the shear lug provisions of ACI 318-19, Section 17.11.
- Section 3.8.1 on tensioning has been modified to add guidance on tightening nuts on anchors to a "snug tight" condition from the AISC *Steel Construction Manual* (AISC 2017).
- Table in Section 3.8.1 has been changed to correct an error in the conversion of the US customary units to metric (SI) units.
- Flow charts for seismic design of anchorage shown in Figures 3-24T and 3-24S in Section 3.11.1 have been greatly expanded to account for the fact that anchor rods cannot be designed to be ductile in shear.

Chapter 4 has been revised to include a new Section 4.9 to address the design considerations of post-installed reinforcing bar connections.

Chapter 5 has been revised to include guidance for the installation of cast-in-place anchors and modifications to Section 5.4.2 related to cast-in-place anchor inspection plans.

The examples in the appendix have been modified and additional examples have been added to help the Responsible Engineer in working with the various types of anchorage design.

1.4 CODES AND DESIGN PROCEDURES

Changes in design methodology documented in the publications discussed subsequently have resulted in changes to the formulas and methodologies as presented in the original report, which was largely based on the "45-degree cone" method. This book references the Concrete Capacity Design (CCD) Method, which assumes a more conservative critical spacing of three times the effective embedment depth for tension-loaded anchors, as opposed to twice the embedment depth in the 45-degree cone approach, and accounts for size effect associated with relatively high bearing stresses (and strain gradients) in the concrete. This was not accounted for in the 45-degree cone method. The following is a brief summary of the ACI Committee work relating to anchorage design.

In 2000, ACI Committee 355 published the ACI provisional standard, *Qualification of Post-Installed Mechanical Anchors in Concrete* (ACI 355.2-00) (ACI 2000) *and Commentary* (ACI 355.2R-00). This document prescribed testing programs and evaluation requirements for post-installed mechanical anchors intended to support the newly drafted CCD provisions incorporated in Appendix D of ACI 318/318R-02 (ACI 2002). ACI 355.2 was designated as an ACI standard in 2001. A parallel standard for adhesive anchors, ACI 355.4 (ACI 2011b), was added in 2011. The most current ACI 355 standards as of the printing of this document are ACI 355.2-19 (ACI 2019c), *Qualification of Post-Installed Mechanical Anchors in Concrete and Commentary;* ACI 355.4-19 (ACI 2020), *Qualification of Post-Installed Adhesive Anchors in Concrete and Commentary (Inch-Pound Units)*; and

@seismicisolation

ACI 355.4M-11 (ACI 2011c), *Qualification of Post-Installed Adhesive Anchors in Concrete and Commentary (Metric Units).*

Note: ACI 318-19 references ACI 355.4-11 and as such, ACI 355.4-11 is referenced going forward in this book rather than ACI 355.4-19, which was published at the time that this publication was being prepared. ACI 318M-19 references ACI 355.4M-11 and as such, ACI 355.4M-11 is referenced in this book. ACI 318-19 and ACI 318M-19 reference ACI 355.2-19 and as such, ACI 355.2-19 is referenced in this publication.

ACI Committee 318 first approved the inclusion of the mandatory Appendix D—Anchoring to Concrete in 2002. It provided strength design requirements for anchorage to concrete that consider several potential failure modes such as steel strength, concrete breakout, anchor pullout, side-face blowout, and anchor pryout (shear) in accordance with the CCD Method. In 2014, Appendix D was moved into the body of the ACI 318 code as Chapter 17. The Chapter 17 provisions, as reflected in ACI 318-19, include many significant changes from the original Appendix D provisions, including

1. Definition of reinforcement sufficient to preclude concrete breakout,
2. Significant enhancement of the provisions for ductile anchors and the inclusion of a nonductile anchor option in the seismic design provisions,
3. Provisions for shear lugs, and
4. Significant relaxation of diameter and embedment depth limits.

ACI Committee 349, Appendix B, introduced provisions for anchor design in 1976 (ACI 1976). In 2001, ACI Committee 349 adopted the CCD Method as Appendix B of ACI 349-01 (ACI 2001). In contrast to ACI 318/318R-02 Appendix D, however, Appendix B of ACI 349-01 included provisions for nonductile anchors as well as the use of friction to resist shear, and design provisions for shear lugs.

In 2007, ACI Committee 349 published ACI 349.2R-07 (ACI 2007), reapproved in 2014, *Guide to the Concrete Capacity Design (CCD) Method—Embedment Design Examples*. This book presents design examples of single and multiple embedded elements in concrete members based on Appendix D (formerly Appendix B) of ACI 349-06 (ACI 2006), which is based on the CCD Method. In ACI 349-13, Appendix D was further expanded from the previous ACI 349-06 version.

ACI 349-13 is the last independent code for nuclear construction. The next edition of the ACI 349 code will be a dependent code based on ACI 318.

1.5 STATE OF RESEARCH

Fuchs et al. (1995) published a code background paper in the *ACI Structural Journal*, *Concrete Capacity Design (CCD) Approach for Fastening to Concrete*. The CCD Method is the basis for the provisions in the current ACI 318 and ACI 349 codes for the design of anchors in concrete. This method provides a simple

@seismicisolation

approach to the calculation of concrete breakout strength that is readily adaptable to groups and near-edge conditions using a simple rectangular projected failure surface calculation procedure.

Until recently, test results were limited for the larger diameter anchors and deep embedment depths commonly used in industrial facilities. The majority of embedment depths included in the international database used to verify the CCD Method are less than 7.87 in. (200 mm), with very few, if any, greater than 21.7 in. (550 mm). Most anchor sizes that had been tested were less than 2 in. (50.8 mm) in diameter, with a majority of the tests having been performed on anchors 1 in. (25.4 mm) or less in diameter. Klingner and Mendonca (1982a, b) present a literature review of tensile capacity and shear capacity of short anchors and welded studs. Eligehausen et al. (2006) provide a good overview of research in the field of fastening technique from around the world. An ACI technical paper, *Tensile-Headed Anchors with Large Diameter and Deep Embedment in Concrete*, published in (Lee et al. 2007), presents tests results for larger anchor rods with diameters ranging from 2.75 in. (70 mm) to 4.75 in. (121 mm) and embedment lengths ranging from 25 in. (635 mm) to 45 in. (1,143 mm), with and without supplemental reinforcing. A companion paper, *Shear Behavior of Headed Anchors with Large Diameters and Deep Embedments*, appeared in the *ACI Structural Journal* in 2010. In addition, deeper embedments have been modeled using finite elements with advanced concrete modeling (microplane model) by Ožbolt et al. (2007). From these studies, the following has become clear: (1) The current expression for concrete breakout in tension in ACI 318-19, which increases in proportion to the embedment depth to the power of 3/2, is also applicable to deep embedments. It may also be the case that, for embedments beyond 25 in. (635 mm), the use of a less conservative expression for concrete breakout (e.g., that is proportional to the embedment depth to the power of 5/3) may be acceptable, provided that the bearing stress at the head of the bolt is kept low. (2) The current expressions for concrete edge breakout in shear in ACI 318-19 may be unconservative for anchor diameters larger than 4 in. (100 mm), and for such cases, the use of appropriately proportioned and detailed hairpin reinforcement, or shear lugs, is preferred in lieu of relying on the concrete breakout strength of near-edge anchors.

Grosser (2012) provides a more nuanced approach to the subject of near-edge anchorages subjected to shear loading, with a direct formulation for parallel to edge and oblique loading cases.

The interaction of reinforcing in concrete members with anchors in tension and shear is highly dependent on the specific geometry and loading. For this reason, very little actual testing has been performed to establish the effect of reinforcing on anchor capacity in either shear or tension or both. Lee et al. (2010) included testing with hairpins and other reinforcing configurations in their investigation of large diameter anchors subjected to shear loading.

Extensive testing has been performed to identify edge distance and anchor spacing influences. Lee and Breen (1966) reported on the results for 26 bolts, and Hasselwander et al. (1977) published a report based on the results for 35 bolts. Bailey and Burdette also published a report in 1977 titled *Edge Effects on*

@seismicisolation

Anchorage to Concrete. Furche and Eligehausen (1991) performed pullout tests with headed studs placed near a free edge and recommended an empirical equation for calculating the failure load in their paper titled *Lateral Blow-Out Failure of Headed Studs Near a Free Edge*. ACI 349-01 includes extensive commentary comparing the 45-degree cone method and the CCD Method in this regard.

Tests by Chicchi et al. (2020) and subsequent tests conducted in the United States, Korea, and China have confirmed the potential for a concrete breakout of closely spaced straight bars embedded at development length and loaded in tension. This has significant implications for the use of development length expressions as a substitute for anchor provisions in Chapter 17 of ACI 318-19. This work indicates that particular care should be exercised where headed bars are used in groups to transmit significant tension loads into concrete elements, and that the basis for the development length provisions (mean strength with an embedded strength reduction factor) is not compatible with the assumptions used for the development of the concrete breakout provisions of Chapter 17 of ACI 318-19.

1.6 FUTURE RESEARCH

The following items should be considered for future research:

1. Investigate the validity of Strut-and-Tie Method design procedures for anchor reinforcement ties for shear load transfer at or near the tops of pedestals and other foundation element locations;
2. Establish standard details for pedestal anchorages that employ shear lugs, tension-only anchors, and appropriate reinforcing/confinement of the pedestal top;
3. Establish more generally applicable provisions for anchor reinforcement;
4. Confirm the side-face-blow-out failure mechanisms of reinforced concrete elements at the anchor head and provide recommendations for reinforcement details and locations relative to the anchor head;
5. Investigate the high-cycle fatigue effect on post-installed grouted anchors and establish standard details for prestressing of such anchorages to reduce such effects;
6. Conduct testing for tension and uplift anchorage connectors to resist wind, seismic, other transient, and sustained tensile loads at the embedded interface to the top of a pile and into the concrete pile cap;
7. Confirm the effectiveness of corrugated anchor sleeves for increasing the interface stress or bond stress for the grout pocket and the relative location of the anchor head with respect to the center of the sleeve;
8. Confirm the relationship of the stretch length of anchors to the corresponding inelastic energy deformation;

@seismicisolation

9. Investigate the effect of cold-forming of threads on the ductility of threaded rods as used for anchoring and the effectiveness of methods such as heat treatment to restore ductility to such elements;
10. Investigate the behavior of anchors with larger diameters and deeper embedments using properly calibrated numerical modeling techniques;
11. Confirm the current industry practice and theory used to design anchor reinforcement for tensile load transfer and determine development lengths;
12. Investigate the applicability of the CCD method to nonorthogonal (e.g., circular) bolt arrangements;
13. Investigate the applicability of the CCD method to adjacent bolt groups;
14. Identify the failure modes and capacities for concrete breakout strength in the tension of anchors in nonrectangular pedestals (e.g., round or octagonal pedestals); and
15. Investigate the relationship of reinforcing bar development equations and anchor design equations with respect to failure modes, mean versus 5% fractile predictions, and strength reduction factors.

References

ACI (American Concrete Institute). 1976. *Code requirements for nuclear safety related concrete structures*, ACI 349-76. Farmington Hills, MI: ACI.

ACI. 2000. *Qualification of post-installed mechanical anchors in concrete and commentary*, ACI 355.2-00 and ACI 355.2R-00. Farmington Hills, MI: ACI.

ACI. 2001. *Code requirements for nuclear safety related concrete structures*, ACI 349-01. Farmington Hills, MI: ACI.

ACI. 2002. *Building code requirements for structural concrete and commentary*, ACI 318/318R-02. Farmington Hills, MI: ACI.

ACI. 2006. *Code requirements for nuclear safety-related concrete structures and commentary*, ACI 349-06. Farmington Hills, MI: ACI.

ACI. 2007. *Guide to the concrete capacity design (CCD) method—Embedment design examples*, ACI 349.2R-07. Farmington Hills, MI: ACI.

ACI. 2008. *Building code requirements for structural concrete and commentary*, ACI 318-08. Farmington Hills, MI: ACI.

ACI. 2011a. *Building code requirements for structural concrete and commentary*, ACI 318-11. Farmington Hills, MI: ACI.

ACI. 2011b. *Qualification of post-installed adhesive anchors in concrete and commentary (metric units)*, ACI 355.4-11. Farmington Hills, MI: ACI.

ACI. 2011c. *Qualification of post-installed adhesive anchors in concrete and commentary (metric units)*, ACI 355.4M-11. Farmington Hills, MI: ACI.

ACI. 2013. *Code requirements for nuclear safety-related concrete structures and commentary*, ACI 349-13. Farmington Hills, MI: ACI.

ACI. 2014. *Building code requirements for structural concrete and commentary*, ACI 318-14. Farmington Hills, MI: ACI.

ACI. 2019a. *Building code requirements for structural concrete and commentary*, ACI 318-19. Farmington Hills, MI: ACI.

@seismicisolation

ACI. 2019b. *Building code requirements for structural concrete and commentary (metric)*, ACI 318M-19. Farmington Hills, MI: ACI.

ACI. 2019c. *Qualification of post-installed mechanical anchors in concrete and commentary*, ACI 355.2-19. Farmington Hills, MI: ACI.

ACI. 2020. *Qualification of post-installed adhesive anchors in concrete and commentary (inch-pound units)*, ACI 355.4-19. Farmington Hills, MI: ACI.

AISC (American Institute of Steel Construction). 2017. *AISC steel construction manual*. 15th ed. Chicago: AISC.

ASCE. 1997. *Design of anchor bolts in petrochemical facilities*. Reston, VA: ASCE.

ASCE. 2013. *Anchorage design for petrochemical facilities*. Reston, VA: ASCE.

ASTM International. 2020. *Standard specification for anchor bolts, steel, 36, 55, and 105-ksi yield strength*, ASTM F1554-20. West Conshohocken, PA: ASTM.

Bailey, J. W., and E. G. Burdette. 1977. *Edge effects on anchorage to concrete*. Civil Engineering Research Series No. 31. Knoxville, TN: University of Tennessee.

Chicchi, R., A. H. Varma, J. Seo, T. Bradt, and E. McCarty. 2020. "Experimental testing of tension-loaded deformed anchors in concrete." *ACI Struct. J.* 117 (5): 133–146.

Eligehausen, R., R. Mallee, and J. F. Silva. 2006. *Anchorage in concrete construction*. Berlin: Ernst & Sohn.

Fuchs, W., R. Eligehausen, and J. Breen. 1995. "Concrete capacity design (CCD) approach for fastening to concrete." *ACI Struct. J.* 92 (1): 73–94.

Furche, J., and R. Eligehausen. 1991. "Lateral blow-out failure of headed studs near a free edge." In *Anchor is Concrete—Design and Behavior*, Special Publication 130, edited by G. A. Senkiw and H. B. Lancelot, 235–252. Farmington Hills, MI: ACI.

Grosser, P. 2012. "Load-bearing behavior and design of anchorages subjected to shear and torsion loading in uncracked concrete." *Ph.D. thesis*, University of Stuttgart, Institute of Construction Materials (IWB).

Hasselwander, G. B., J. O. Jirsa, I. E. Breen, and K. Lo. 1977. *Strength and behavior of anchor bolts embedded near edges of concrete piers*. Research Rep. 29-2F. Austin, TX: Center for Highway Research, University of Texas at Austin.

Klingner, R. E., and J. A. Mendonca. 1982a. "Tensile capacity of short anchor bolts and welded studs: A literature review." *ACI Struct. J.* 79 (4): 270–279.

Klingner, R. E., and J. A. Mendonca. 1982b. "Shear capacity of short anchor bolts and welded studs: A literature review." *ACI Struct. J.* 79 (5): 339–349.

Lee, D. W., and J. E. Breen. 1966. *Factors affecting anchor bolt development*. Research Rep. 88-IF. Austin, TX: Center for Highway Research, University of Texas at Austin.

Lee, N. H., K. S. Kim, C. J. Bang, and K. R. Park. 2007. "Tensile-headed anchors with large diameter and deep embedment in concrete." *ACI Struct. J.* 104 (4): 479–486.

Lee, N. H., K. R. Park, and Y. P. Suh. 2010. "Shear behavior of headed anchors with large diameters and deep embedments." *ACI Struct. J.* 107 (2): 146–156.

Ožbolt, J., R. Eligehausen, G. Periškić, and U. Mayer. 2007. "3D FE analysis of anchor bolts with large embedment depths." *Eng. Fract. Mech.* 74 (1–2): 168–178.

PCA (Portland Cement Association). 2011. *Notes on ACI 318-11 building code requirements for structural concrete*. Skokie, IL: PCA.

PIP (Process Industry Practices). 2018. *Application of ASCE anchorage design for petrochemical facilities*, PIP STE05121. Austin, TX: PIP.

@seismicisolation

@seismicisolation
@seismicisolation

CHAPTER 2
Materials

2.1 INTRODUCTION

This chapter provides the basic materials, properties, and corrosion protection recommendations for anchor bolt and rod assemblies, headed studs, post-installed anchors, and shear lugs. The Responsible Engineer must select the proper material, considering properties such as grade, yield strength, tensile strength, and weldability and provide for corrosion resistance so that the anchorage will perform as required and intended.

Note: Wherever there is a document referenced directly in the text of this chapter that has a metric version of the same document, the metric version of the document should be considered applicable and interchangeable in the reference.

2.2 ANCHOR BOLT AND ROD ASSEMBLIES

2.2.1 Anchor Bolts, Studs, and Rods

Tables 2-1 and 2-2 list the ASTM specifications, yield strengths, ultimate strengths, and range of available diameters for materials commonly used for anchor bolts, studs, and rods, respectively. Unless the anchors are to be used in a special corrosive environment or are subjected to extreme low or high temperatures or other special conditions, the following specifications should be used:

1. ASTM A307 (ASTM 2021a) Grade A bolts, ASTM A36/A36M (ASTM 2019b) rods or ASTM F1554 (ASTM 2020j) Grade 36 rods for low-strength requirements,
2. ASTM F1554 Grade 55 rods for moderate-strength requirements. Grade 55 rods should be ordered with the weldability supplement, and
3. ASTM F1554 Grade 105 rods for high-strength requirements.

@seismicisolation

Table 2-1. Common Materials for Anchor Bolts and Studs.

ASTM specification	*f_y, min [ksi (MPa)]*	*f_{uta}, min [ksi (MPa)]*	*Diameter range [in. (mm)]*	*Notes*
A307 Grade A	Not specified by ASTM	60 (414)	1/4 (6.4) to 4 (102)	For general applications. Weldable if Supplementary Requirement S1 is specified in the purchase order
A354 Gr BC	109 (752)	125 (862)	1/4 (6.4) to 2 1/2 (64)	
	99 (683)	115 (793)	Over 2 1/2 (64) to 4 (102)	
A354 Gr BD	130 (896)	150 (1,034)	1/4 (6.4) to 4 (102)	Do not galvanize. Hydrogen-stress cracking or stress-cracking corrosion may occur on hot-dip galvanized bolts
A449 (ASTM 2020g)	92 (634)	120 (827)	1/4 (6.4) to 1 (25)	
	81 (558)	105 (724)	Over 1 (25) to 1 1/2 (38)	
	58 (400)	90 (621)	Over l 1/2 (38) to 3 (76)	

Notes:
1. All materials meet ACI 318-19, Chapter 17 ductility requirements unless otherwise noted.
2. ASTM F1554 allows the substitution of weldable Grade 55 steel when Grade 36 is specified. If the Responsible Engineer does not want this substitution, it must be specifically stated in the purchase order.
3. Other rod materials that may be suitable for anchorage exist (e.g., stainless steel). The application may have special concerns for environmental exposure conditions. See Section 2.6 and consult with a material specialist for recommendations.
4. Metric equivalents shown in parentheses are those shown in the ASTM standard where provided, or by conversion where not provided. Metric equivalent diameters designated with "M" for ASTM A193/A193M are those provided in the standard.
5. Threaded anchor rods and bolts should be threaded only at the top and bottom of the anchor rod or bolt where required for nuts. Threads should be excluded in the body of the anchor rod where the anchor rod or bolt is in contact with the concrete. This provides uniform tension stresses on the anchor rod or bolt when under tension and maximizes the stretching length of the anchor rod or bolt.
6. Hot-dip galvanized anchors (i.e., anchor bolts, anchor rods, and nuts) should use the UNC thread series. Nuts for galvanized anchors are tapped oversize to accommodate the extra 2 to 6 mils (0.05 to 0.15 mm) of zinc that is added to the threads of the anchor bolts and rods during the galvanizing process. Without this allowance, the nut cannot be threaded onto the anchor bolt or rod. If the 8 UN series is used instead of the UNC thread series, the finer threads for anchors with bolt or rod diameters greater than 1 1/2 in. (40 mm) can result in a premature thread stripping of the anchor bolts or rods and reduce the capacity of the anchor bolts or rods. For simplicity, the UNC thread series should be used for all anchors that are to be hot-dip-galvanized and not just for anchors with bolt or rod diameters greater than 1 1/2 in. (38 mm).
7. ASTM F1554 permits anchor suppliers to provide Grade 55 weldable anchors as a substitute for Grade 36 anchors. This substitution is not acceptable if ductile anchors are required. If ductile anchors are required, anchors should be both designed and specified as Grade 55, unless design calculations are performed to assure that Grade 36 anchors are acceptable.

@seismicisolation

Table 2-2. Common Materials for Anchor Rods.

ASTM specification	*f_y min [ksi (MPa)]*	*f_{uta} min [ksi (MPa)]*	*Diameter range [in. (mm)]*	*Notes*
A36/A36M	36 (250)	58 (400)	Not specified. Refer to ASTM F1554 Grade 36	Weldable. ASTM F1554 Grade 36 is referenced in ASTM A36/A36M for anchor bolts
A193/A193M Gr B7	105 (720)	125 (860)	to 2 1/2 (M64)	Can be galvanized, but it is normally neither required nor recommended. (Section 3.2 of ASTM A193/A193M prohibits coatings unless specified by the purchaser.)
	95 (655)	115 (795)	Over 2 1/2 (M64) to 4 (M100)	
	75 (515)	100 (690)	Over 4 (M100) to 7 (M180)	
A320/A320M Gr L7	105 (725)	125 (860)	To 2 1/2 (65)	For low-temperature applications
F1554 Gr 36	36 (248)	58 (400)	1/2 (12.7) to 4 (102)	Weldable
F1554 Gr 55	55 (380)	75 (517)	1/2 to 4 (12.7 to 102)	Weldable with Specification's Supplementary Requirement S1
F1554 Gr 105	105 (724)	125 (862)	1/2 to 3 (12.7 to 76)	None

Note: See notes in Table 2-1.

@seismicisolation

2.2.2 Washers

Washers are required for all anchors at the top of the anchor below the nut and should conform to the following requirements:

1. Washers for all anchors other than ASTM A307 bolts should conform to ASTM F436/F436M (ASTM 2019d), except that washers for ASTM F1554 rods should conform to the requirements of ASTM F1554, Section 6.8.
2. Washers for ASTM A307 bolts may conform to ASTM F844 (ASTM 2019c).
3. Washers for high-strength anchors or anchors that are to be tensioned should be hardened washers conforming to ASTM F436/F436M.
4. Anchors for base plates with hole diameters greater than 3/8 in. (10 mm) larger than the anchor diameter should have fabricated ASTM A36/A36M washers in addition to the ASTM F436/F436M or ASTM F844 washers (Table 3-3.).

2.2.3 Nuts

Nuts should conform to the following requirements:

1. Nuts for all anchor bolts and rods other than ASTM A193/A193M (ASTM 2020d), ASTM A320/A320M (ASTM 2021b), and ASTM F1554 should conform to ASTM A563/A563M (ASTM 2021d).
2. Nuts for ASTM A193/A193M and ASTM A320/A320M rods should conform to ASTM A194/A194M (ASTM 2020e).
3. Nuts for ASTM F1554 rods should conform to either ASTM A194/A194M or ASTM A563/A563M.

Note: It is not necessary to specify that zinc-coated nuts which are fabricated to ASTM A563/A563M be tapped oversize, because this requirement is addressed in the specification.

2.2.4 Sleeves

Sleeves are normally made of either of the following materials: (1) Thin-walled pipe, which can be smooth for nonstructural applications or corrugated, where an interlocking action is desired. (2) Polyethylene, either smooth or corrugated.

A detailed discussion of anchor sleeves is presented in Section 3.2.3.

2.2.5 Fabrication

2.2.5.1 General

Flux, slag, and weld-splatter deposits should be removed before galvanizing because the normal pickling process does not remove slag. Toe cracking at weldments around anchor plates is undetectable prior to galvanizing and is easily detected after galvanizing. A postgalvanizing inspection should be considered to detect these cracks.

@seismicisolation

Materials that have been quenched and tempered should not be welded or hot-dip-galvanized. High-strength materials should not be bent or welded because their strength and performance may be affected.

2.2.5.2 Threads

Threads of a mechanical fastener can be produced by cutting, rolling, or grinding. Cutting and rolling are the most common types. The differences, advantages, and disadvantages of these two types of threads are described subsequently.

2.2.5.2.1 Cut Threads

Cut threads are produced by cutting away or otherwise physically removing steel from a round bar to form the threads.

Advantages of cut threads include few limitations with regard to diameter and thread length and all specifications can be manufactured with cut threads. Disadvantages of cut threads include longer labor times to cut mean higher costs and can result in stress concentration points.

2.2.5.2.2 Rolled Threads

Rolled threads are produced by extruding steel to form the threaded portion of a fastener instead of removing it as in producing cut threads. In this process, a fastener is manufactured from a reduced-diameter round bar. The fastener is "rolled" through a set of threading dies, which displaces the steel and forms the threads. The end result is a fastener with a full-diameter-threaded portion but a reduced body diameter. Producing rolled threads is an extremely efficient process and often results in significant cost savings.

1. Advantages of rolled threads
   (a) Significantly shorter labor times mean lower costs.
   (b) Cold working makes threads more resistant to damage during handling. In fact, cold working compresses the grain and increases the yield and tensile strengths, usually from 10% to 30%.
   (c) Rolled threads are often smoother because of the burnishing effect of the rolling operation.
2. Disadvantages of rolled threads
   (a) Availability of a pitch-diameter round bar is limited for certain material grades.
   (b) Rolled threads cannot be used for anchors having a minimum tensile strength of 150 ksi (1,030 MPa) or greater.

2.2.5.3 Upset Threads

Anchor rods with upset threads have a thread-section diameter greater than the rod-body diameter (Figure 2-1). Upset threads are provided to assure that yielding will occur outside the threaded portion of the anchor. These rods are normally furnished for shoring waler tie rods, bracing tie rods, rail anchor clips, or other applications requiring strain length. The threads can be formed by either cutting or

@seismicisolation

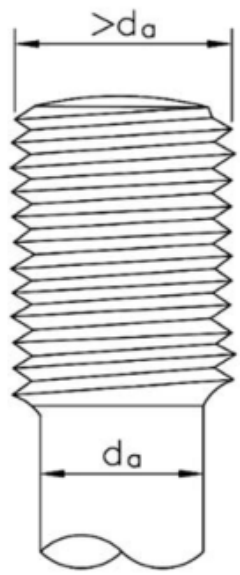

Figure 2-1. Anchor rod with upset threads.

rolling. It is recommended that the specifier consult with the anchor supplier prior to specifying to verify availability and proper specification. Anchor rods with upset threads are not commonly used in petrochemical and other industrial facilities.

2.2.5.4 Shot Peening

Shot peening, defined as shot blasting with small steel balls driven by a blast of air, is a method of removing defects for highly critical anchors and is specifically recommended for use on anchors subjected to high-cycle fatigue. It is not deemed necessary for other applications.

2.3 HEADED STUDS

Headed studs are manufactured from low-carbon steel in accordance with ASTM A29/A29M (ASTM 2020a) Grades 1010 through 1020, conforming to the requirements of AWS D1.1/D1.1M. AWS D1.1/D1.1M Type B studs are normally specified, which have a minimum yield strength of 51 ksi (352 MPa) and a minimum specified tensile strength of 65 ksi (448 MPa).

2.4 POST-INSTALLED ANCHORS

Post-installed anchors are manufactured in a variety of materials. A detailed discussion of post-installed anchors is presented in Chapter 4. The Responsible

@seismicisolation

Engineer should consult the manufacturer of proprietary systems for materials used and select the most appropriate material for the intended use of the anchor and the environment in which it will be used.

2.5 SHEAR LUGS

A shear lug is a plate, hollow structural section (HSS), pipe, or wide flange structural shape welded perpendicular to the bottom of a base plate. Plates are manufactured of the same material as the base plate. HSS are normally manufactured in accordance with ASTM A500/A500M (ASTM 2021c), whereas pipes are normally manufactured from ASTM A53/A53M (ASTM 2020b) Grade B material. Wide-flange structural shapes are normally manufactured from ASTM A992/A992M (ASTM 2020i) material.

2.6 CORROSION

Several forms of corrosion are associated with anchors in concrete, including contact corrosion, crevice corrosion, pitting, and intercrystalline stress corrosion. As with reinforcing steel, the embedded portion of an anchor in concrete derives a certain level of protection from the alkalinity of the concrete, resulting in a passivation of the steel surface. Over time, loss of alkalinity owing to external environmental influences and the intrusion of chlorides will lead to a breakdown in the passivation layer. Typically, the most critical location for contact and crevice corrosion is the point where the anchor protrudes from the concrete and engages the fastened part. Pitting corrosion is particularly problematic for stainless steels, because failure can occur without warning and with little prior external visual evidence of corrosion products.

Corrosion-resistant materials used in the production of anchors include the following:

1. Hot-dip galvanized carbon steel,
2. Austenitic (chromium-nickel) stainless steels (Types 304 and 316),
3. High-molybdenum stainless steel alloys, and
4. Titanium.

Corrosion protection may also take the form of a protective coating system or other methods to prevent contact of the anchor with the atmosphere.

For high-sulfur environments, the use of galvanizing may be preferable to austenitic stainless steels such as Type 316 or Alloy 20 stainless steel because of the hazard of pitting corrosion. High-molybdenum stainless steels have been shown to be particularly resistant to long-term exposure in road tunnels, exhaust stacks, and similar environments. Titanium offers excellent resistance to corrosion, but it may be cost-prohibitive.

@seismicisolation

Anchorage service life requires that corrosion protection be an important design consideration. Anchorage material or coating system selection should provide a reliable and high-quality service life for an item that is relatively inaccessible for maintenance, repairs, or replacement because of corrosion. Many factors and environmental exposure conditions exist, and these should be considered. The Responsible Engineer may need to consult with material specialists about corrosion protection during the anchorage material selection process.

2.6.1 Environmental Conditions

It is a recommended practice in the petrochemical industry to provide environmental corrosion protection with hot-dip galvanizing for all anchors in exterior applications. Other coating systems may be used, but they are not as common and may be more expensive.

The exposed portion of the anchor at the concrete interface and the embedded portion of the anchor are vulnerable to corrosion from infiltration of moisture, air, and other corrosive elements. Anchorage near waterways and seashores requires additional corrosion protection against wet–dry cycles and excessive salts. Deicing salts in runoff from areas with snow and ice, sulfates, or chlorides that may be present in the concrete or in the site soils can also be particularly corrosive to anchorage.

The hot-dip galvanizing of anchors, sealing of joints, and concrete cracks that develop during initial construction and regular maintenance will provide long-term protection benefits throughout the life of the anchor system.

Galvanized and stainless materials can fail when subjected to corrosive chemicals such as acids or industrial fumes. Such materials used in these applications require additional coating systems.

Anchorage located in controlled environments inside buildings may not require protection from atmospheric corrosion but may still require protection from exposure to chemicals.

Bare, uncoated, or weathering steels should not be used in petrochemical and other industrial applications where premature rusting because of coastal environments and high concentrations of corrosive chemicals or industrial fumes are present.

2.6.2 Codes and Specifications

2.6.2.1 American Concrete Institute

Anchorage should be considered as an extension of the concrete, as noted in ACI 318-19 (ACI 2019a). This requires that exposed reinforcement, inserts, and plates intended for bonding with future extensions be protected from corrosion.

ACI 318-19 requires that concrete, reinforcing, and anchor rods exposed to injurious amounts of oil, acids, alkalis, salts, organic materials, or other substances that may be deleterious, be protected from those substances.

The amount of soluble chloride ion content in concrete is controlled by ACI 318-19. See ACI 222R (ACI 2019c) *Guide to Protection of Reinforcing Steel in Concrete against Corrosion* for additional information.

@seismicisolation

When external sources of chlorides are present, anchors should be protected in a manner similar to that required for reinforcing bars, in accordance with ACI 318-19.

2.6.2.2 American Institute of Steel Construction

Anchorage corrosion protection and material selection is outside the scope of AISC specifications. AISC Steel Design Guide 1, *Base Plate and Anchor Rod Design* (Fisher and Kloiber 2006), and AISC Steel Design Guide 7, *Industrial Building Design* (Fisher 2019), include information to assist in some of the practical aspects of design and application of anchor rods.

AISC recommends that anchor rods subjected to corrosive conditions be galvanized. If anchor rods are galvanized, it is best to specify ASTM A307, ASTM A36/A36M, or ASTM F1554 materials to avoid the embrittlement that sometimes results when high-strength steels are galvanized. See Tables 2-1 and 2-2 for other materials and related notes.

2.6.2.3 American Petroleum Institute

API Standard 620 (API 2021) recommends using stainless steel anchorage materials or providing a corrosion allowance when using carbon steels.

API Standard 650 (API 2020) states that if corrosion is a possibility, an increase in material thickness should be considered for anchorage. It is recommended that the nominal anchor diameter not be less than 1 in. (25 mm) and a corrosion allowance of at least 1/4 in. (6 mm) increase in diameter be provided.

2.6.3 Corrosion Rates

Substantial variations occur in corrosion rates even under relatively similar conditions. Corrosion rates in actual service can vary from those that are cited or determined by technical sources. During the design of material protection systems, materials and process engineers should be consulted to define the corrosive exposure conditions and what material or coating system is most suitable for protecting the anchorage system.

If coating is not appropriate for corrosion protection, a corrosion allowance may be required when sizing the anchor. Minimum corrosion protection without galvanizing or other coating system would be a minimum 1/4 in. (6 mm) increase in the required design diameter for corrosion protection for the anchorage. However, the Responsible Engineer should be aware that providing corrosion allowance as a means of corrosion protection should be used with care because any severe corrosion in the threads will degrade the engagement between the bolt and the nut and impair the fastener's performance.

2.6.4 Coatings

If anchor rods are in an area where the environment is particularly corrosive or abrasive, special coatings to exposed threads and nuts are required. Protective coatings may be preferable to increasing the anchor rod diameter and possibly the length of embedment needed to develop the larger diameter anchor rod.

@seismicisolation

Polyamide epoxies and urethanes for carbon steel anchor rods provide protection against alternating wet–dry environments. Phenolic epoxy coatings provide protection for chemical and acid vapors or fumes that exist in some industrial atmospheres or environments. An epoxy coating system can be field-applied to the exposed threads and nuts after the anchor nut is secured to provide additional protection to galvanized anchors and nuts. A shop-applied coating should not be used prior to anchor and nut installation.

2.6.4.1 Hot-Dip and Mechanical Galvanizing

Coating with a hot-dip or mechanical galvanizing process provides a cost-effective and maintenance-free corrosion protection system for most general applications. Hot-dip galvanizing should conform to ASTM A153/A153M (ASTM 2016a) or ASTM F2329/F2329M (ASTM 2015), as appropriate.

The Responsible Engineer, the fabricator, and the galvanizer should take precautions against embrittlement in accordance with recommended practice in ASTM A143/A143M (ASTM 2020c). A coating weight of 1 to 2.5 oz/ft^2 (0.3 to 0.75 kg/m^2) is normal for the hot-dip process. A recommended coating weight of 2.3 oz/ft^2 (0.7 kg/m^2) is an average application requirement. A corrosion allowance should not be required or added to galvanized anchor rods.

Carbon steel materials with ultimate tensile strengths of less than 150 ksi (1,100 MPa) can be hot-dip-galvanized. Alloy steel materials with greater ultimate tensile strengths should not be hot-dip-galvanized because, as the tensile strength increases, the possibility of hydrogen embrittlement, where hydrogen is absorbed into the steel during the pickling process, increases. Blast cleaning rather than pickling should be used for alloy materials when considering galvanizing. ASTM A143/A143M procedures should be used to safeguard against hydrogen embrittlement of hot-dip galvanized alloy steel products.

Galvanizing temperature and the effects of heat on quenched and tempered materials should be reviewed with the anchor fabricator and galvanizer to confirm that the galvanizing process is below the minimum material stress relief or tempering temperature.

As an alternative to hot-dip zinc coating, mechanical galvanizing (electrodeposited zinc, an inorganic zinc-rich paint, or other coating systems specifically selected for corrosion protection) can be used. Mechanical galvanizing should conform to ASTM B695 (ASTM 2016b).

2.6.4.2 Cold-Applied Zinc

A cold-applied, organic, zinc-rich compound primer or coating should be used for field touch-up of galvanized bolts or rods that have areas damaged during shipment or erection. Commercial zinc products for touch-up are zinc-rich paint, zinc spraying, or brushed molten zinc. Touch-up paint should have 94% zinc dust in the dry film and should be applied to a minimum dry film thickness of 8 mils (0.20 mm). Refer to ASTM A780/A780M (ASTM 2020h) for additional information.

@seismicisolation

2.6.4.3 Insulation and Fireproofing

Anchors encased in insulation or fireproofing required for equipment or structural steel columns within enclosed facilities may not require corrosion protection depending on service location or if in coastal environments. In petrochemical and other industrial facilities, conditions exist for equipment and structural steel columns such that moisture can collect under the insulation or fireproofing. The anchors should be either hot-dip-galvanized and/or coated with a zinc-based primer or other coating material similar to that to be used for the equipment or structural steel column. Two coats of primer, for a total dry film thickness of 3 to 4 mils (0.08 to 0.10 mm), should provide the necessary corrosion protection for this service. Anchor threads and nuts may need additional protection with an asphaltic mastic coating to allow for future retightening or removal of nuts.

2.6.4.4 Recommendations

A corrosion allowance is not required for anchors that are galvanized or coated. Anchors that are not galvanized or coated should have a minimum corrosion allowance of 1/4 in. (6 mm) added to their diameter, although it is preferable that they can be galvanized or coated.

All types of protective coatings should be periodically inspected and maintained to prevent corrosion from reducing the design capacity of the anchorage assembly.

Anchors should be kept free of accumulations of excess materials or debris that may contain or trap moisture around anchors. Concrete and grout surfaces should be sloped to drain water. Avoid details that will create pockets, crevices, and faying surfaces that can collect and accumulate water, debris, and other damp materials around the anchorage.

Foundations located in areas with a high groundwater table are highly susceptible to corrosion. The diameter of anchors exposed to surface drainage or groundwater should be increased for corrosion protection as noted previously unless a protective coating is provided.

The surfaces between base plates and the concrete or grout supporting critical equipment or structures may require sealing to prevent the infiltration of corrosive elements. Dry pack grout pads formed with cement and sand should be coated or sealed in areas with cyclic wet–dry environments, because this type of grout pad tends to break down with age in a cyclic wet–dry environment.

The service life of a combined system of paint over galvanizing is substantially greater than the sum of the lives of the individual coatings. Precautions must be taken to ensure adherence of the paint to the galvanized surface, which is smooth and does not permit mechanical locking of the coating film.

2.6.5 Weathering Steel

Steel manufactured in accordance with ASTM A588/A588M (ASTM 2019a), commonly referred to as weathering steel, develops a tight oxide coating that

@seismicisolation

protects against corrosion of the substrate. In certain environments, it will provide a relatively maintenance-free application. The material will form a protective surface with a loss of metal thickness of about 2 mils (0.05 mm). Weathering steel will provide atmospheric corrosion resistance that is 4 to 6 times the corrosion resistance of ordinary carbon steel.

Bare weathering steel should not be submerged in water because it will not provide corrosion resistance greater than black carbon steel in the same service. Bare weathering steel should not be exposed to recurrent wetting by salt water, spray, or fogs because the salt residue will cause accelerated corrosion.

Weathering steel may be painted or galvanized as readily as carbon steel, although its appearance may not be uniform because of the higher silicon content. Urethane foam and other fire retardants can be highly corrosive when wet with water. Foam suppliers can recommend paint systems that are compatible with their foams.

Weathering steel may be used when anchors are exposed to corrosive atmospheres, but it should be understood that it will rust and stain the foundation concrete if so exposed and is usually not recommended for petrochemical and other industrial facilities.

2.7 ANCHORAGE EXPOSED TO EXTREME TEMPERATURES

2.7.1 Exposure to Low Temperatures

When an anchor is exposed to extreme low temperatures, the main design concern is that the anchor material will become brittle and fail, either prematurely or at a strength level that is less than its design load. To mitigate this concern, a sample of the anchor material should be tested at low temperatures to measure impact properties. This is typically accomplished using a Charpy V-notch test. Testing requirement can be found in ASTM A370 (ASTM 2020f). For extreme low-temperature exposure, ASTM A320/A320M L7 material is recommended. Tables 2-3 and 2-4 provide recommended testing for different grades and diameters of anchor materials.

The minimum design metal temperature at which anchors are exempt from impact testing requirements depends on the anchor material specifications. ASME (2021) Boiler and Pressure Vessel Code, Section VIII, Division 1, Figure UCS-66, provides guidance for impact test exemption for bolting and nuts based on material type and design metal temperature. ASTM A307 anchors should be exempt from impact testing to −20 °F (−29 °C). Anchors fabricated of ASTM A193/A193M, Grade B7 material should be exempt from impact testing to −55 °F (−48 °C). Anchors fabricated of ASTM A320/A320M, Grade L7 material inherently satisfy impact test requirements at low temperatures, and, therefore, no further impact test requirements are necessary.

@seismicisolation

Table 2-3. Cold Temperature Anchor Material Testing Recommendations.

		Anchor material diameter (d_a)		
Yield Type	Specified Minimum Yield Strength	$d_a < 0.50$ in. ($d_a < 13$ mm)	$0.50'' \leq d_a \leq 2.0$ in. (13 mm $\leq d_a \leq 2.0''$ 51 mm)	$d_a > 2.0$ in. ($d_a > 51$ mm)
I	<50 ksi (345 MPa)	NT	CV1	CV2
II	50 ksi (345 MPa)	CV1	CV1	CV2

Notes: NT = no impact testing required to demonstrate toughness; CV1 = Charpy V-Notch Toughness Class 1, as defined in Table 2-4; CV2 = Charpy V-Notch Toughness Class 2, as defined in Table 2-4; Charpy V-notch = specimens are V-notched according to ASTM A673/A673M (ASTM 2017b) and tested in accordance with ASTM A370.

Table 2-4. Charpy V-Notch Test Performance Requirements—Anchor Material.

Toughness class	Test temperature	Test values	
CV1	14 °F (−10 °C)	Minimum average	20 ft-lbf (27 J)
		Minimum individual	16 ft-lbf (22 J)
CV2	−4 °F (−20 °F)	Minimum average	20 ft-lbf (27 J)
		Minimum individual	16 ft-lbf (22 J)

2.7.2 Exposure to Elevated Temperatures

When an anchorage is exposed to extreme high temperatures, the main design concerns are with the coating, grouting, and reduction in strength of the anchorage materials (steel and concrete). High-temperature concerns for anchors should be addressed at the design stage of the project and carried through to construction, including inspection and testing.

For hot-dip galvanized coating to remain effective for long-term use, the maximum service temperature of the anchor should be less than 390 °F (199 °C). At a temperature of 390 °F (199 °C), peeling of the free zinc layer begins to occur. At higher temperatures, the resistance to peeling deteriorates at a higher rate. This does not mean that there is no corrosion protection. When peeling occurs, only the outer free zinc layer has become detached, leaving the zinc–iron alloy layers to provide corrosion protection to the steel. This peeling action, however, is undesirable. If these high temperatures are anticipated on the anchor, then an alternative means of corrosion protection should be employed.

Most epoxy grouts experience excessive creep and loss of strength when exposed to high temperatures. Hydrocarbon-based bonding materials such as

@seismicisolation

epoxies carbonize at approximately 572 °F (300 °C), leading to a permanent loss of mechanical properties. In the case of adhesive anchors, the relationship between temperature rise and bond resistance of the adhesive in situ will determine the load capacity of the anchorage when exposed to high temperatures.

Concrete starts to experience a loss of strength at around 150 to 200 °F (65 to 93 °C) (refer to AISC 360-16, Table A-4.2.2) (AISC 2016). Current codes and industry standards dealing with reinforced concrete structures, such as ACI 349-13 (ACI 2013a), specify a maximum temperature limit for concrete in service of about 150 to 200 °F (65 to 93 °C) to ensure predictable concrete behavior. Because of this, concrete and, thus, anchor bolts should not usually be designed to be exposed to service temperatures higher than 200 °F (93 °C).

Carbon steel experiences a loss of elasticity at temperatures above 200 °F (93 °C) and a loss of strength at temperatures above 750 °F (399 °C) (refer to AISC 360-16 Table A-4.2.1). As the temperature becomes higher than 800 °F (427 °C), the loss of strength to carbon steel becomes larger. Stainless steels offer greater resistance to extreme high temperatures than carbon steels and usually possess a lower thermal coefficient of transmissibility. ASTM A193/A193M Grade B7 material is recommended for use in high-temperature services.

2.7.3 Exposure to Fire

Anchors exposed to fire conditions are subject to strength loss primarily on the basis of softening of the exposed steel components. Where threaded parts are exposed directly to flame, failure is often precipitated by a softening of the threads.

Anchors may be tested for fire exposure using standardized time–temperature curves representative of a hydrocarbon-based fire, as described in UL 1709 (UL 2017).

Adhesive anchors may present special challenges for assessment of fire resistance, because they may also be compromised as a result of either resin softening or carbonization or both, and loss of strength in the concrete in which the anchors are embedded.

Protective measures include increasing the embedment depth and ensuring that the side cover is sufficient to maintain concrete temperatures well below the carbonization temperature for organic materials [approximately 500 to 575 °F (260 to 302 °C)] for the design fire exposure duration.

Where anchors are used to suspend mechanical and architectural systems, protection of the anchors without corresponding measures to protect the suspended rods or other elements will probably be ineffective in prolonging fire resistance.

References

ACI (American Concrete Institute). 2013a. *Code requirements for nuclear safety-related concrete structures and commentary*, ACI 349-13. Farmington Hills, MI: ACI.

ACI. 2019a. *Building code requirements for structural concrete and commentary*, ACI 318-19. Farmington Hills, MI: ACI.

ACI. 2019c. *Guide to protection of reinforcing steel in concrete against corrosion*, ACI 222R-19. Farmington Hills, MI: ACI.

@seismicisolation

AISC (American Institute of Steel Construction). 2016. *Specification for structural steel buildings*, AISC 360-16. Chicago: AISC.

API (American Petroleum Institute). 2021. *Design and construction of large, welded, low-pressure storage tanks*, API 620 (12th ed., 2013, plus addendum 1, 2014, addendum 2, 2018, and addendum 3, 2021). Washington, DC: API.

API. 2020. *Welded tanks for oil storage*. 13th ed., API 650. Washington, DC: API.

ASME (American Society of Mechanical Engineers). 2021. *Boiler and pressure vessel code*. New York: ASME.

ASTM International. 2015. *Standard specification for zinc coating, hot-dip, requirements for application to carbon and alloy steel bolts, screws, washers, nuts, and special threaded fasteners*, ASTM F2329/F2329M-15. West Conshohocken, PA: ASTM.

ASTM. 2016a. *Standard specification for zinc coating (hot-dip) on iron and steel hardware*, ASTM A153/A153M-16a. West Conshohocken, PA: ASTM.

ASTM. 2016b. *Standard specification for coatings of zinc mechanically deposited on iron and steel*, ASTM B695-04 (R2016). West Conshohocken, PA: ASTM.

ASTM. 2017a. *Standard specification for quenched and tempered alloy steel bolts, studs, and other externally threaded fasteners*, ASTM A354-17. West Conshohocken, PA: ASTM.

ASTM. 2017b. *Standard specification for sampling procedure for impact testing of structural steel*, ASTM A673/A673M-17. West Conshohocken, PA: ASTM.

ASTM. 2019a. *Standard specification for high-strength low-alloy structural steel, up to 50 ksi [345 MPa] minimum yield point, with atmospheric corrosion resistance*, ASTM A588/A588M-19. West Conshohocken, PA: ASTM.

ASTM. 2019b. *Standard specification for carbon structural steel*, ASTM A36/A36M-19. West Conshohocken, PA: ASTM

ASTM. 2019c. *Standard specification for washers, steel, plain (flat), unhardened for general use*, ASTM F844-19. West Conshohocken, PA: ASTM.

ASTM. 2019d. *Standard specification for hardened steel washers inch and metric dimensions*, ASTM F436/F436M-19. West Conshohocken, PA: ASTM.

ASTM. 2020a. *Standard specification for general requirements for steel bars, carbon and alloy, hot-wrought*, ASTM A29/A29M-20. West Conshohocken, PA: ASTM.

ASTM. 2020b. *Standard specification for pipe, steel, black and hot-dipped, zinc-coated, welded and seamless*, ASTM A53/A53M-20. West Conshohocken, PA: ASTM.

ASTM. 2020c. *Standard practice for safeguarding against embrittlement of hot-dip galvanized structural steel products and procedure for detecting embrittlement*, ASTM A143/A143M-07 (R2020). West Conshohocken, PA: ASTM.

ASTM. 2020d. *Standard specification for alloy-steel and stainless steel bolting for high temperature or high pressure service and other special purpose applications*, ASTM A193/A193M-20. West Conshohocken, PA: ASTM.

ASTM. 2020e. *Standard specification for carbon steel, alloy steel, and stainless steel nuts for bolts for high pressure or high temperature service, or both*, ASTM A194/A194M-20a. West Conshohocken, PA: ASTM.

ASTM. 2020f. *Standard test methods and definitions for mechanical testing of steel products*, ASTM A370-20. West Conshohocken, PA: ASTM.

ASTM. 2020g. *Standard specification for hex cap screws, bolts and studs, steel, heat treated, 120/105/90 ksi minimum tensile strength, general use*, ASTM A449-14 (R2020). West Conshohocken, PA: ASTM.

ASTM. 2020h. *Standard practice for repair of damaged and uncoated areas of hot-dip galvanized coatings*, ASTM A780/A780M-20. West Conshohocken, PA: ASTM.

@seismicisolation

ASTM. 2020i. *Standard specification for structural steel shapes*, ASTM A992/A992M-20. West Conshohocken, PA: ASTM.

ASTM. 2020j. *Standard specification for anchor bolts, steel, 36, 55, and 105-ksi yield strength*, ASTM F1554-20. West Conshohocken, PA: ASTM.

ASTM. 2021a. *Standard specification for carbon steel bolts, studs, and threaded rod 60,000 psi tensile strength*, ASTM A307-21. West Conshohocken, PA: ASTM.

ASTM. 2021b. *Standard specification for alloy-steel and stainless steel bolting for low-temperature service*, ASTM A320/A320M-21a. West Conshohocken, PA: ASTM.

ASTM. 2021c. *Standard specification for cold-formed welded and seamless carbon steel structural tubing in rounds and shapes*, ASTM A500/A500M-21. West Conshohocken, PA: ASTM.

ASTM. 2021d. *Standard specification for carbon and alloy steel nuts (inch and metric)*, ASTM A563/A563M-21a. West Conshohocken, PA: ASTM.

Fisher, J. M. 2019. *Industrial building design*. AISC Steel Design Guide 7. Chicago: AISC.

Fisher, J. M., and L. A. Kloiber. 2006. *Base plate and anchor rod design*. AISC Steel Design Guide 1. Chicago: AISC.

UL (Underwriters Laboratories). 2017. *Rapid rise fire tests of protection materials for structural steel*. 5th ed., UL 1709. Northbrook, IL: UL.

@seismicisolation

CHAPTER 3
Cast-in-Place Anchor Design

3.1 INTRODUCTION

In the past, there has been a lack of guidance in building codes for the design of anchorage to concrete. As a result, Responsible Engineers have used experience, knowledge of concrete behavior, and guidance from other design recommendations, such as ACI 349-06 (ACI 2006), Appendix D (formerly Appendix B in previous versions of ACI 349 codes) for help in designing these anchorages. In 2002, ACI 318-02 (ACI 2002) introduced Appendix D, addressing this important area of design. When this method was first introduced, there was no mention of using anchor reinforcement to prevent a concrete breakout of the anchor. Thus, because of small concrete sections, large forces, and correspondingly large anchor sizes, the petrochemical industry could not use the method without modification. The modification that was used was to add reinforcement to transfer anchorage forces to the concrete. ACI 318-08 (ACI 2008), Appendix D added properly developed anchor reinforcement to resist anchor breakout to the code. With the revision of ACI 318-14 (ACI 2014), Appendix D was incorporated into the body of ACI 318 as Chapter 17. Thus, ACI 318, Chapter 17 can now be used by the petrochemical and other related heavy industries without modification.

The Concrete Capacity Design (CCD) Method uses a pyramid failure surface with a slope of 1.5 to 1 (approximately 35 degrees) for both tensile and shear loading. The method uses formulas for tension and shear, which are proportional to the depth of embedment and edge distance, respectively, to an exponent of 1.5. For more information on the basis for ACI 318, Chapter 17 and ACI 349, Appendix D, the reader is referred to the paper by Fuchs et al. (1995). This paper details how testing has revealed that the CCD Method is a more accurate predictor of concrete capacity for various anchorages than methods using bond strength of anchors to concrete. This has also been verified through probabilistic studies by Klingner and Mendonca (1982). The reader is cautioned, however, that the amount of testing done on anchor arrangements, sizes, and depths of embedment typically found in the petrochemical and other industrial facilities is limited. Therefore, it is difficult to draw definite conclusions about the accuracy of using this method for large anchors and deep embedments without further experimentation.

All these factors (depth of embedment, arrangement, and anchor sizes) point to the fact that design by the CCD Method will usually produce more conservative

@seismicisolation
@seismicisolation

designs for the anchor sizes and embedments typically found in the petrochemical industry. However, the paper by Fuchs et al. (1995). also notes that the method was primarily developed for anchors in unreinforced concrete and that the use of reinforcement designed to engage failure cones could substantially increase the load capacity of the anchorage. An early evaluation of the CCD Method for typical supports in the petrochemical and other industrial facilities was the observation of more conservative results. The results revealed that, without the use of reinforcing, this method would lead to unacceptably conservative concrete member sizes. Based on the preceding observations, this book will identify the critical steps in anchorage design and make recommendations for providing reinforcing details for safe and economical designs.

The design of foundations in petrochemical and other industrial facilities often requires the anchorage of tall vessels and structures subject to large wind and seismic forces, which, in turn, results in large-diameter anchors. Transferring the loads from these anchors to the foundation and developing anchor reinforcement often requires large embedment lengths. Thus, the embedment length may sometimes control the depth of the foundation.

Because the size of the concrete members, in which anchors are embedded, is often limited by the available space left after piping, electrical conduit, instrumentation, other foundations, and access requirements are met, design decisions often involve choices not required in other industries.

3.2 ANCHOR CONFIGURATION AND DIMENSIONS

3.2.1 Configuration of Cast-in-Place Anchors

In the past, anchorage to concrete consisted of J-bolts, L-bolts, steel rods with nuts, or steel rods with plate washers. Because J- and L-bolts are no longer recommended for anchorage to concrete because of the potential for slip at service loads (Lee and Breen 1966, Cannon et al. 1975), the primary method of anchorage has become the steel rod threaded at both ends, with a nut at the bottom. If the anchor is fabricated from weldable material, typically the nut is tack-welded. If the anchor is not fabricated from weldable material, two nuts may be provided and jammed together. If the bearing area of a single nut is not adequate to meet the requirements of ACI 318-19 (ACI 2019a), Section 17.6.3.2.2a to prevent crushing of the concrete, a larger diameter-round plate of appropriate thickness can be added above the nut to increase the bearing area accordingly. (Square plates should be avoided because of the concrete cracking potential caused by the embedment of sharp corners in the concrete.) Refer to Section 3.13.2 for predesigned anchor plates that will prevent crushing of the concrete.

In addition, in 1997, using funding from the Southern Gas Association and its subsidiary, the Gas Machinery Research Council, the Southwest Research Institute published research on determining by finite analysis the horizontal forces from gas compressors that need to be restrained and the required capacity for main-frame anchorage. Subsequent field testing of various anchor configurations

@seismicisolation

verified the research and confirmed that J- or L-bolt configurations can lead to anchor bolt pullout under dynamic loading.

Recently, it has become possible to obtain headed bolts of long lengths without the need to thread and attach a nut. The responsible Engineer should check the availability of long-headed bolts for use in their area. These would be Type 1 anchors as shown in Figure 3-2.

3.2.2 Minimum Dimensions

The following minimum anchorage dimensions are suggested for cast-in-place anchors. They are typical dimensions used in the petrochemical and related industries. They are not intended to provide for developing the full anchor capacity. Therefore, properly designed reinforcement may be required.

Anchors without sleeves:

- Embedment in Concrete — $12d_a$
- Anchor Projection — two threads above fully engaged nut(s)
- Concrete Edge Distance from the Centerline of Anchor
  - Mild Steel [36 ksi (250 MPa)] — larger than $4d_a$ or 4.5 in. (115 mm)
  - High-Strength Steel — larger than $6d_a$ or 4.5 in. (115 mm)
- Anchor Spacing — $4d_a$ (d_a is anchor diameter)

Anchors with sleeves:

When sleeves are used, the minimum dimensions listed should be increased. In addition, when partial sleeves are used, a minimum clearance between the top of the bottom nut or anchor plate and the bottom of the sleeve shell should be provided to prevent the unexpected pullout of the anchor that may occur as a result of the interruption of the failure plane by the sleeve. For full-length sleeves, the embedment depth does not need to be increased, as long as the bolt is fully developed for the design load.

- Embedment in Concrete — larger of $12d_a$ and $(h_s + h_e')$

where h_s is the height of the partial sleeve shell embedded in concrete, and h_e' is the minimum nut-sleeve clearance = larger of $6d_a$ and 6 in. (150 mm).

- Concrete Edge Distance from the Centerline of Anchor — an increase of 0.5 $(d_s - d_a)$

  where d_s is the sleeve shell diameter
- Anchor Spacing — an increase of $(d_s - d_a)$

In addition to these recommendations, the Responsible Engineer should comply with ACI 318-19, Section 17.9. If the bolts are to be torqued, the minimum edge distances and spacings will increase.

Also, refer to API Recommended Practice 686/PIP REIE 686 (API 2009) for minimum-edge distance recommendations for machinery foundations.

@seismicisolation

3.2.3 Sleeves

3.2.3.1 General

Sleeves are used with anchors if a small alignment movement or elongation (stretch length) of the anchor is desired for ductility or tensioning after the anchor is set in concrete. Note that it may be more cost-effective to use tape in lieu of a full-length sleeve for tensioned bolts. The sleeve types shown in Figure 3-1 are usually provided to address these needs.

Partial sleeves are typically provided to allow for small horizontal adjustments of smaller-diameter anchors [1 in. (24 mm) and smaller] during equipment installation to align the anchors with the equipment holes. The partial sleeve increases the length of the anchor not cast against concrete and allows for this adjustment. This type of sleeve should be filled with grout, nonbonding moldable material, or elastomeric moldable nonhardening material after placement of the equipment to prevent liquid from accumulating in the sleeve. For anchors larger than 1 in. (24 mm), which cannot be easily moved even when a sleeve is provided, other methods such as templates and more diligent QA/QC procedures in placing the anchors should be used, so that horizontal adjustment will not be necessary. In the case of larger-diameter anchors, the only relevant applications for using a sleeve are to provide stretch length to meet the requirements for the anchor to be a ductile steel element and/or where the anchor will be tensioned. Recommended dimensions for partial sleeves are given in Tables 3-1 and 3-2.

For smaller-diameter anchors, full-length sleeves can be used if the Responsible Engineer determines that a greater allowance is required for alignment than a partial sleeve would provide. If stretch length is required for anchor ductility or tensioning, the full-length sleeve should be sealed on top or filled with nonbonding moldable material or elastomeric moldable nonhardening material to prevent the grout or liquid from filling the sleeve.

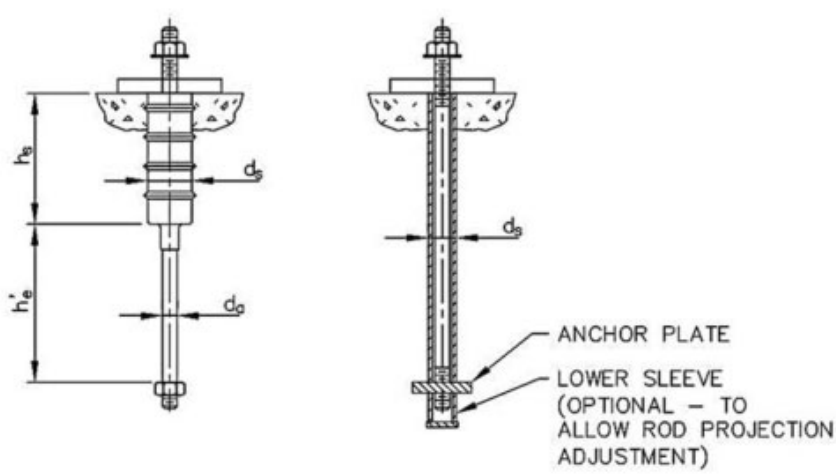

Figure 3-1. Typical anchor sleeves: (a) partial sleeve, (b) full-length sleeve.

@seismicisolation

Table 3-1. Minimum Anchor Dimensions—US Customary Units.

Anchor rod diameter	Effective cross-sectional area of anchor rod in tension (Note 3)	Heavy hex head/nut width	Anchor Type 2 thread length at bottom of anchor		Minimum dimensions (Note 1)						
						Edge distance c_a (Note 2)			Sleeves [see Note 1(d)]		
						ASTM A307, ASTM A36, ASTM F1554 Grade 36	High-strength (>36 ksi) or torqued anchors		Shell size		
			With no AP	With AP (Note 4)	h_{ef}			Spacing	Diam d_s	Height h_s	h'_e
d_a	$A_{se,N}$	W_h	TB1	TB2	$12d_a$	$4d_a \geq 4.5$ in.	$6d_a \geq 4.5$ in.	$4d_a$			$6d_a \geq$ 6 in.
in.	in^2	in.	in.	in.	in.	in.	in.	in.	in.	in.	in.
5/8	0.226	1.25	1.25	—	7.5	4.5	4.5	2.5	2	7	6
3/4	0.334	1.44	1.25	2.25	9.0	4.5	4.5	3.0	2	7	6
7/8	0.462	1.69	1.50	2.50	10.5	4.5	5.3	3.5	2	7	6
1	0.606	1.88	1.75	3.00	12.0	4.5	6.0	4.0	3	10	6
1 1/4	0.969	2.31	2.00	3.50	15.0	5.0	7.5	5.0	—	—	—
1 1/2	1.405	2.75	2.25	4.00	18.0	6.0	9.0	6.0	—	—	—
1 3/4	1.900	3.19	2.50	4.75	21.0	7.0	10.5	7.0	—	—	—
2	2.500	3.63	2.75	5.25	24.0	8.0	12.0	8.0	—	—	—
2 1/4	3.250	4.06	3.00	5.75	27.0	9.0	13.5	9.0	—	—	—

(Continued)

@seismicisolation

Table 3-1. Minimum Anchor Dimensions—US Customary Units. (Continued)

Anchor rod diameter	Effective cross-sectional area of anchor rod in tension (Note 3)	Heavy hex head/nut width	Anchor Type 2 thread length at bottom of anchor		Minimum dimensions (Note 1)						
						Edge distance c_a (Note 2)			Sleeves [see Note 1(d)]		
			With no AP	With AP (Note 4)	h_{ef}	ASTM A307, ASTM A36, ASTM F1554 Grade 36	High-strength (>36 ksi) or torqued anchors	Spacing	Shell size		h'_e
									Diam d_s	Height h_s	
d_a	$A_{se,N}$	W_h	TB1	TB2	$12d_a$	$4d_a \geq 4.5$ in.	$6d_a \geq 4.5$ in.	$4d_a$			$6d_a \geq$ 6 in.
in.	in^2	in.	in.	in.	in.	in.	in.	in.	in.	in.	in.
2 1/2	4.000	4.50	3.50	6.50	30.0	10.0	15.0	10.0	—	—	—
2 3/4	4.930	4.94	3.75	7.00	33.0	11.0	16.5	11.0	—	—	—
3	5.970	5.31	4.00	7.75	36.0	12.0	18.0	12.0	—	—	—

Source: Adapted and reproduced with permission from PIP, © 2022 The University of Texas at Austin.

Notes: See Figure 3-2 for dimension locations.

1. *If partial sleeves are used*, the following dimensional modifications apply:
   a. Embedment should be greater than $12d_a$ or $(h_s + h'_e)$.
   b. Edge distance should be increased by 0.5 $(d_s - d_a)$.
   c. Spacing should be increased by $(d_s - d_a)$.
   d. Partial length sleeves are not recommended for anchors greater than 1 in. (25 mm) (Section 3.2.3.1).
2. For machinery foundations, the minimum edge distance from the edge of sleeves is greater than 6 in. (150 mm) or 4-anchor rod diameters in accordance with API Recommended Practice 686/PIP REIE686.
3. Effective cross-sectional areas of anchor rods in tension assumes UNC series threads. For cast-in-place anchors, the effective cross-sectional areas of anchor rods in shear are the same areas as those in tension.
4. TB2 dimension used for Type 2 anchors "WITH AP" assumes the anchor plate thickness shown in Table 3-11 or 3-12 for ASTM F1554 (ASTM 2020b) Grade 36 anchors in 4,000 psi (28 MPa) concrete. If other thickness AP plates are used, the TB2 dimension may need to be adjusted.

@seismicisolation

Table 3-2. Minimum Anchor Dimensions—Metric (SI) Units.

Anchor rod diameter	Effective cross-sectional area of anchor rod in tension (Note 3)	Heavy hex head/nut width	Anchor Type 2 thread length at bottom of anchor		Minimum dimensions (Note 1)						
						Edge distance c_a (Note 2)			Sleeves [see Note 1(d)]		
			With no AP	With AP (Note 4)	h_{ef}	ASTM A307, ASTM A36M, ASTM F1554 Grade 36	High-strength (>248 MPa) or torqued anchors	Spacing	Shell size		h'_e
d_a	$A_{se,N}$	W_h	TB1	TB2	$12d_a$	$4d_a \geq$ 115 mm	$6d_a \geq$ 115 mm	$4d_a$	Diam d_s	Height h_s	$6d_a \geq$ 150 mm
mm	mm²	mm	mm	mm	mm	mm	mm	mm	mm	mm	mm
16	157	26	30	—	192	115	115	64	50	175	150
20	245	33	35	—	240	115	120	80	50	175	150
24	353	40	40	—	288	115	144	96	75	250	150
30	561	49	45	85	360	120	180	120	—	—	—
36	817	59	50	100	432	144	216	144	—	—	—
42	1,121	68	60	110	504	168	252	168	—	—	—
48	1,473	78	65	130	576	192	288	192	—	—	—

(Continued)

@seismicisolation

Table 3-2. Minimum Anchor Dimensions—Metric (SI) Units. (Continued)

Anchor rod diameter	Effective cross-sectional area of anchor rod in tension (Note 3)	Heavy hex head/nut width	Anchor Type 2 thread length at bottom of anchor		Minimum dimensions (Note 1)						
						Edge distance c_a (Note 2)			Sleeves [see Note 1(d)]		
			With no AP	With AP (Note 4)	h_{ef}	ASTM A307, ASTM A36M, ASTM F1554 Grade 36	High-strength (>248 MPa) or torqued anchors	Spacing	Shell size		h'_e
d_a	$A_{se,N}$	W_h	TB1	TB2	$12d_a$	$4d_a \geq$ 115 mm	$6d_a \geq$ 115 mm	$4d_a$	Diam d_s	Height h_s	$6d_a \geq$ 150 mm
mm	mm²	mm	mm	mm	mm	mm	mm	mm	mm	mm	mm
56	2,030	87	75	145	672	224	336	224	—	—	—
64	2,676	97	85	165	768	256	384	256	—	—	—
72	3,440	106	90	185	864	288	432	288	—	—	—

Source: Adapted and reproduced with permission from PIP, © 2022 University of Texas at Austin.

Notes: See Figure 3-2 for dimension locations.

1. *If partial sleeves are used*, the following dimensional modifications apply:
   a. Embedment should be greater than $12d_a$ or $(h_s + h'_e)$.
   b. Edge distance should be increased by 0.5 $(d_s - d_a)$.
   c. Spacing should be increased by $(d_s - d_a)$.
   d. Partial length sleeves are not recommended for anchors greater than 1 in. (25 mm) (Section 3.2.3.1).
2. For machinery foundations, the minimum edge distance from the edge of sleeves is greater than 6 in. (150 mm) or 4-anchor rod diameters in accordance with API Recommended Practice 686/PIP REIE686.
3. Effective cross-sectional areas of anchor rods in tension assumes UNC series threads. For cast-in-place anchors, the effective cross-sectional areas of anchor rods in shear are the same areas as those in tension.
4. TB2 dimension used for Type 2 anchors "WITH AP" assumes the anchor plate thickness shown in Table 3-11 or 3-12 for ASTM F1554 (ASTM 2020b) Grade 36 anchors in 4,000 psi (28 MPa) concrete. If other thickness AP plates are used, the TB2 dimension may need to be adjusted.

@seismicisolation

For full-length sleeves, the minimum A_{brg} should be calculated using ACI 318-19, Equation (17.6.3.2.2a). The required area of the anchor plate should then be determined using Equation (3-1):

$$\text{Anchor plate area} = A_{brg} + d_s^2 * \pi / 4 \tag{3-1}$$

where A_{brg} is the required bearing area of the anchor plate calculated using ACI 318-19, Equation (17.6.3.2.2a) [in.^{2} (mm^2)], and d_s is the diameter of the sleeve [in. (mm)].

3.2.3.2 Design Considerations When Using Anchor Sleeves

Sleeves will not affect the design of headed anchors subjected to tensile loads because the tension in the anchor is transferred to the concrete via the anchor head and not by the bond between the anchor shaft and the concrete. Care should be taken when using partial sleeves to provide at least a minimum dimension between the bottom of the sleeve shell and the top of the anchor-bearing surface, as specified in Section 3.2.2.

When using partial sleeves, shear should not be transmitted via anchor bearing unless the sleeves are filled with grout to ensure a proper bearing surface at the top of the concrete. See Sections 3.3.3 through 3.3.5 for a detailed discussion of the design considerations associated with the transfer of shear from the attachment to the foundation.

The design of the anchor plate used in full-length sleeves is critical to the functionality of the anchor. Research has shown that if the anchor plate is not sized properly, the strength of the anchorage may decrease because of a weakened failure plane in the concrete (Cannon et al. 1975, 1981). Thus, when designing the anchor plate, the stiffness of the plate should be taken into consideration along with the strength. See Section 3.13.2 for a general guidance on anchor plate thickness recommendations.

3.2.4 Anchor Details and Minimum Dimensions

A sample of typical anchor details is presented in Figure 3-2, with minimum dimensions shown in Tables 3-1 and 3-2.

3.3 STRENGTH DESIGN

3.3.1 General

Depending on the loads and details used for anchorage design, the anchor connections are classified as either ductile or nonductile. For ductile connections, the embedment is proportioned using the ultimate capacity of the ductile element; for nonductile connections, the embedment is proportioned using the factored design method.

@seismicisolation

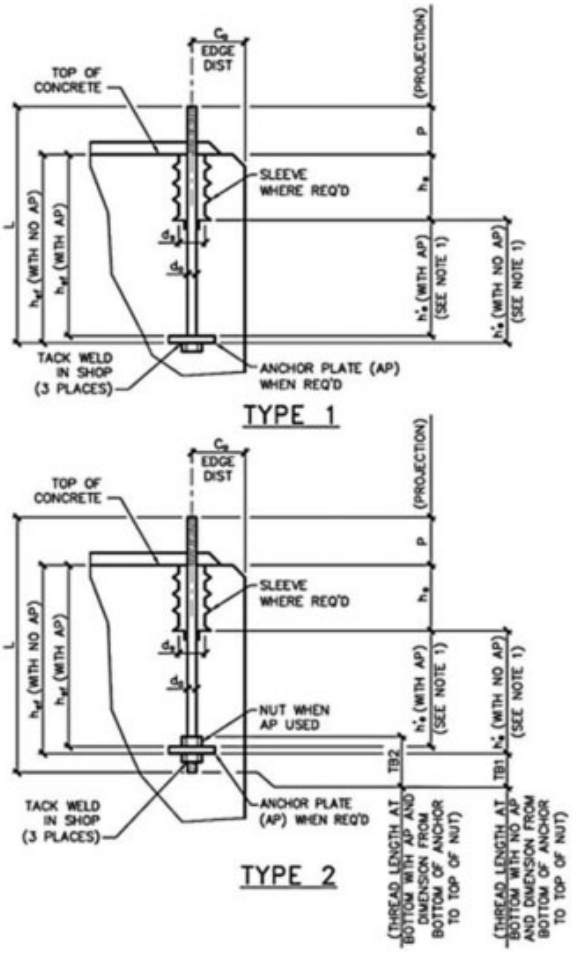

Figure 3-2. Anchor details.

Source: Adapted and reproduced with permission from PIP, © 2022 University of Texas at Austin.

Notes:

1. Distance between the bottom of the sleeve and the anchor-bearing surface, h_e', should not be less than $6d_a$ nor 6 in. (150 mm).
2. See Table 3-1 (US customary units) or Table 3-2 (metric units) for minimum dimensions.

A ductile connection is defined as one that is controlled by the yielding of steel elements (anchor or reinforcement) with large deflections, redistribution of loads, and absorption of energy prior to any sudden loss of capacity of the anchorage resulting from a brittle failure of the concrete. ACI 318-19 and other building codes favor a ductile design for a seismic and blast-resistant design. Ductile design may also be required by the client or project standards.

Anchorage design should be approached as a global structural design issue, that is, focusing more on the development of ductile load–resisting paths than

@seismicisolation

on the ductility of a single element. Once these load paths are developed, the Responsible Engineer can then correctly assess the effect of a ductile connection and decide what requirements should be imposed on an individual anchor.

The Responsible Engineer should base the decision on whether to use ductile or nonductile anchorage design on client specifications, building code requirements, the nature of the applied loads, the consequence of failure, and the ability of the overall structural system to take advantage of the ductility of the anchorage. Overconservatism is frequently induced in the anchor design as a result of conservative anchor sizing by equipment manufacturers, corrosion allowances, and inherent conservatism that results from the process of sizing anchors using allowable stress methods, combined with the design of concrete anchorage using ultimate strength methods. As a result, it is not uncommon for the ultimate capacity of an anchor being more than twice the factored service loads.

As a minimum, anchor design loads should be factored service loads, as required by ACI 318-19. However, there are valid reasons why the Responsible Engineer may choose the design load to be the ultimate tensile capacity of the anchor. These may include easier detection and repair of damage from overload because the anchor elongation can be easily detected.

When peak loads are applied in a short term or in an impulsive manner, properly designed and detailed connections can allow a structural support to continue to carry loads until the short-term peak has passed. Likewise, anchorage design should allow for the redistribution of loads and absorption of energy, as required in seismic or blast-resistant design. When the characteristics and magnitude of the load are unpredictable, the anchorage design should be based on the ultimate tensile capacity of the anchor.

In some cases, the consequence of the failure of a single anchorage may be particularly undesirable. If, for instance, the failure of a single anchorage would lead to the collapse of a vessel or piping that contains highly flammable, toxic, or explosive materials, the Responsible Engineer may want to base the anchorage design on the ultimate tensile capacity of the anchor. In addition, if yielding of a ductile connection produces a hinge in a structure that leads to or causes a brittle failure elsewhere in the structure, the benefits of this ductility are, at best, underutilized, and the Responsible Engineer should evaluate alternative methods of introducing ductility into the system. However, these decisions depend on the characteristics of the structure.

3.3.2 Design Procedure for Anchorage Design of Column Pedestals

1. Determine the load to be transferred from the column base plate to the anchors and pedestal. Use the provisions of the general building code established for the project or the building official for the location of the project. If there is no required building code, use ASCE 7. Use the load combinations and load factors for the required code. Determine the most critical load combination or combinations for the design of the anchors and pedestal.

@seismicisolation

2. Determine the Seismic Design Category (SDC) for the structure being designed. If the SDC is C, D, E, or F according to ASCE 7 or the equivalent category from other building codes, then the anchorage is required to be designed to the additional requirements of ACI 318-19, Section 17.10. See Section 3.11 and the flowchart in Figure 3-24 of this book for clarity on handling the seismic requirements.
3. Make a preliminary layout of the base plate, anchors, and pedestal for analysis. There may be several iterations to find the layout that meets all requirements of ACI 318-19. Make sure that edge distances, spacings, and thicknesses in the preliminary layout comply with ACI 318-19, Section 17.9 to preclude splitting failure.
4. Shear usually creates the most problems in the design of a pedestal. Shear force can be transferred to the concrete by frictional resistance (Section 3.6), but if the factored shear loads exceed the frictional resistance, another method must be provided to transfer the shear from the base plate to the foundation. This can be accomplished by one of the following methods:
   (a) Use a shear lug. See Section 3.7 and Examples 4 and 5 in the appendix.
   (b) Use a mechanism to rigidly connect the base plate to the anchors (such as by field-welding bearing washers in place or by filling the annular space between the anchor and oversized hole in the base plate with grout).
5. Once the mechanism for handling shear is determined, the tensile design can proceed as follows (Appendix, Example 1):
   (a) Select an anchor size and check the steel tensile capacity N_{sa} using ACI 318-19, Section 17.6.1.2 with the reduction factor, ϕ, from ACI 318-19, Table 17.5.3(a).
   (b) Check the concrete breakout strength of the anchor group in tension (N_{cbg}) using ACI 318-19, Section 17.6.2.1.2 (if the tension is caused by a moment couple, include the additional breakout overturning factor described in Section 3.3.3), with the reduction factor, ϕ, from ACI 318-19, Table 17.5.3(b).
   (c) Check the pullout strength of the anchor in tension (crushing of concrete under anchor head) (N_{pn}) using ACI 318-19, Section 17.6.3.1, with the reduction factor, ϕ, from ACI 318-19, Table 17.5.3(c). Note that if the capacity of the anchorage is governed by this requirement, an anchor plate can be added to the bottom of the anchor (Section 3.13).
   (d) Check the concrete side-face blowout strength of the headed anchor in tension (N_{sb}) using ACI 318-19, Section 17.6.4 with the reduction factor, ϕ, from ACI 318-19, Table 17.5.3(b).
6. If the anchors are designed to take shear [the anchors must be capable of taking load from the base plate by a mechanism as noted in (*d*)], or if the load is taken into the pedestal through friction, then the pedestal and anchorage can be designed to take shear as follows. Note that the anchors cannot be considered as part of a ductile connection in shear for earthquake design.

@seismicisolation

(a) Check the steel shear capacity, V_{sa}, using ACI 318-19, Section 17.7.1.2, with the reduction factor, ϕ, from ACI 318, Table 17.5.3(a). If anchors are used with a built-up grout pad, then V_{sa} shall be multiplied by 0.8 according to ACI 318-19 (17.7.1.2.1). (Note that the check for steel shear capacity is not required if the load is coming into the pedestal via shear keys or friction and not through the anchors.)

(b) Check the concrete breakout strength of the anchor group in shear (V_{cbg}) using ACI 318-19, Section 17.7.2, with the reduction factor, ϕ, from ACI 318-19, Table 17.5.3(b).

(c) Check the concrete pryout strength of the anchor group in shear (V_{cpg}) using ACI 318-19, Section 17.7.3, with the reduction factor, ϕ, from ACI 318-19, Table 17.5.3(b). (Note that the check for concrete pryout is not required if the load is coming into the pedestal via shear keys or friction and not through the anchors.)

7. If the pedestal is taking both tension loads and shear loads simultaneously, then the tension shear interaction shall be checked (ACI 318-19, Section 17.8).

8. If the pedestal size, determined using the method described in this section (Section 3.3.2), results in a pedestal that is too large for project requirements, then reinforcement can be added to the pedestal to reduce its size (Section 3.5 and Appendix, Example 2). If the load is primarily tension, the simple approach demonstrated in Appendix, Example 6, can be used.

3.3.3 Anchor Design Considerations

For a nonductile design, if no tensile force is applied to the anchors, the anchors need not be designed for tension. Where the tensile force is adequately transferred to a properly designed reinforcement, there is no requirement to check for the concrete breakout strength of the anchor or group of anchors (N_{cb} or N_{cbg}), but the pullout strength (N_p) and side-face blowout strength (N_{sb} or N_{sbg}) should still be evaluated. Although reinforcement for side-face blowout can be designed, unless proper installation is ensured, this failure mode may still be of concern (see Section 3.5 for the design of anchor reinforcement).

Where the provisions of ACI 318-19, Chapter 17 are used to ascertain concrete failure in a bolt group subject to overturning, it is recommended that an additional modification factor be included to account for the beneficial effect of the compression under the baseplate on the breakout capacity.

This factor is provided in the anchor design provisions in EN 1992-4 (CEN 2018). It may be stated as follows:

A modification factor for anchor groups subjected to the overturning moment where the ratio of the resultant compression to tension forces is larger than 0.8 and any tension-loaded anchors are located $1.5h_{ef}$ or further from any free edge should be determined by using Equation (3-2) or (3-3):

$$\text{If } \frac{z}{h_{ef}} \geq 1.5, \text{ then } \Psi_{m,N} = 1.0 \tag{3-2}$$

@seismicisolation

$$\text{If } \frac{z}{h_{ef}} < 1.5, \text{ then } \Psi_{m,N} = 2 - \frac{z}{1.5h_{ef}} \geq 1.0 \tag{3-3}$$

where

z = Internal lever arm between the centroid of anchors in tension and the centroid of compression force on the foundation,

h_{ef} = Effective embedment depth of anchor, and

$\Psi_{m,N}$ = Modification factor for the overturning moment meeting the aforementioned requirements.

This modification factor, $\Psi_{m,N}$, may be included in the group breakout expression given by Equation (17.6.2.1b) in ACI 318-19.

3.3.4 Concrete Breakout Strength of a Group of Anchors in a Rectangular Pattern in Shear

In accordance with ACI 318-19, Chapter 17, the concrete breakout strength of a group of anchors in a rectangular pattern in shear should be taken as the lesser value of the following concrete breakout strengths: (1) The concrete breakout strength of the row of anchors closest to the front edge perpendicular to the direction of force on the anchors. (2) The concrete breakout strength of the row of anchors farthest from the front edge perpendicular to the direction of force, if a mechanism is provided to rigidly connect the base plate to this row of anchors (such as by field-welding bearing washers in place) (see ACI 318-19, Figure R17.7.2.1b for an illustration of this concept).

This committee proposes the following additional check, although it is not specifically addressed in ACI 318-19, Chapter 17:

> The concrete breakout strength of the row of anchors farthest from the front edge perpendicular to the direction of force if closed shear ties or other mechanisms are used to transfer the load from the row of anchors closest to the front edge to the row of anchors farthest from the front edge (see Figure 3-12).

3.3.5 Concrete Breakout Strength in Shear of a Group of Anchors in a Circular Pattern

Anchors for tall vertical vessels are frequently not required to resist shear because the shear is resisted by friction created by the large compressive force attributable to overturning (see Section 3.6 for an evaluation of frictional resistance). However, there are cases where the anchor may be required to transfer the shear load, such as for shorter vertical vessels or for those subject to seismic design (see Section 3.11 for the seismic design of anchors). Two alternative methods for designing the anchors to resist shear are as follows: (1) Determine the concrete breakout strength of the anchor group in shear by multiplying the strength of the "weakest" anchor by the total number of anchors in the circle. (2) Where closed shear ties or other mechanisms transfer the load from the "weak" to the "strong" anchors, determine the concrete breakout strength of the anchor group in shear by calculating the shear strength of the "strong" anchors (Figure 3-3).

@seismicisolation

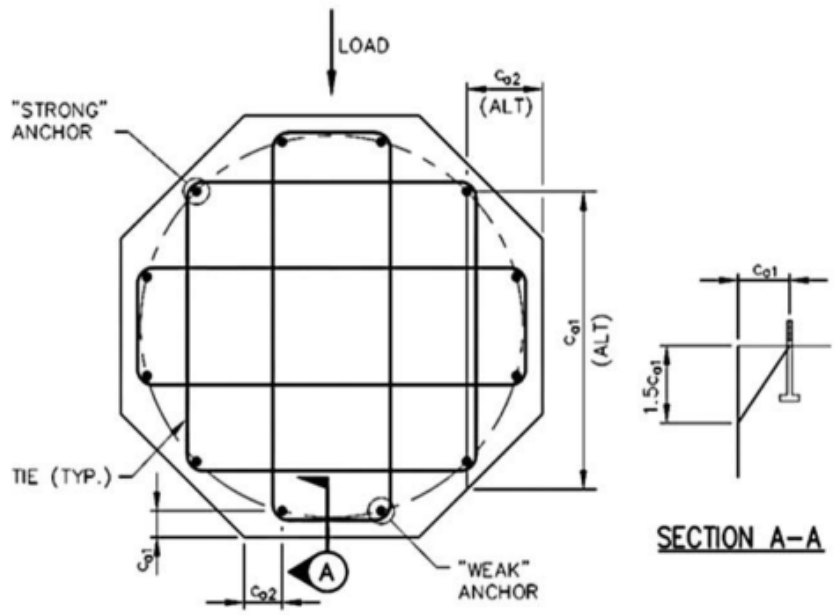

1. FOR ALTERNATIVE a THE RESISTING SHEAR IS CALCULATED FOR THE TOTAL NUMBER OF ANCHORS (IN THIS CASE 12 ANCHORS) TIMES THE STRENGTH OF THE "WEAK" ANCHORS (USING c_{a1} AND c_{a2} FOR THE "WEAK" ANCHORS TO CALCULATE THE BREAKOUT STRENGTH OF ANCHORS IN SHEAR) REFERENCE ACI 318–19 SECTION 17.7.2.

2. FOR ALTERNATIVE b THE RESISTING SHEAR IS CALCULATED FOR THE "STRONG" ANCHORS ONLY (IN THIS CASE 4 ANCHORS) TIMES THE STRENGTH OF THE "STRONG" ANCHORS (USING c_{a1} (ALT) AND c_{a2} (ALT)). BECAUSE c_{a1} (ALT) AND c_{a2} (ALT) ARE MUCH GREATER THAN c_{a1} AND c_{a2} THIS ALTERNATIVE WILL USUALLY PROVIDE GREATER RESISTING SHEAR. HOWEVER TIES TO TRANSFER LOAD FROM THE "WEAK" ANCHORS TO THE "STRONG" ANCHORS MUST BE PROVIDED.

Figure 3-3. Concrete breakout strength of a group of anchors in a circular pattern in shear.

Source: Adapted and reproduced with permission from PIP, © 2022 University of Texas at Austin.

3.4 DUCTILE DESIGN

Ductility is the ability of a structure, its components, or the materials used therein to maintain resistance in the inelastic domain of response. It includes the ability to sustain large deformations and the capacity to absorb energy by hysteretic behavior. Displacement ductility is defined as the ultimate strain of the material divided by its yield strain. For an anchor in tension, it may be taken as the elongation of the anchor at maximum tension load divided by the elongation at yield.

Anchor ductility is desirable for preventing brittle failure in the connection for two reasons: (1) It provides a greater margin against failure because it permits

@seismicisolation

redistribution of load to adjacent anchors, and (2) it reduces the maximum dynamic loads by energy absorption and reduction in stiffness [refer to ACI 349-13 (ACI 2013)]. An anchor that is characterized as a ductile steel element should have a stretch length of at least eight anchor diameters unless otherwise determined by analysis [ACI 318-19, paragraph 17.10.5.3(a) (iii)]. This stretch length can be obtained by using a sleeve that is longer than the stretch length filled with either nonbonding moldable material or elastomeric moldable nonhardening material, or by wrapping the anchor with a nonbonding tape for the required stretch length.

> **Note**: ACI 318-19 requires that the anchor material in a ductile anchor have an elongation of at least 14% and a reduction of area of at least 30% during a tensile elongation test. See Tables 2-1 and 2-2 for guidance on ductile material selection. For a discussion of ductility of post-installed anchors, see Section 4.5.3.

An embedment is considered ductile when the failure mechanism of the element, anchor, or reinforcement is controlled by yielding of the element prior to a brittle concrete failure. Where anchor ductility cannot be ensured, brittle failure can be prevented by designing a ductile yielding mechanism in the attachment in flexure, shear, or bearing, or a combination of those conditions, and considering both material overstrength and strain-hardening effects for the attachment. The anchor is then designed for the maximum tension and shear that can be transmitted to the anchor via this mechanism [ACI 318-19, Sections 17.10.5.3(b) and 17.10.6.3(a)]. Where geometric or material strength limitations prohibit such an approach, it may be appropriate to apply an overstrength factor to the load case. The anchorage capacity provided by the concrete or properly developed reinforcement need only be ductile for the controlling design strength. For instance, if it can be shown by analysis that increasing tension loading will cause failure of the ductile steel element before the shear strength of the anchorage is reached, then the anchorage need only be shown to be ductile for tension loads. Conversely, if it can be shown by analysis that shear loading will always cause failure of the ductile steel element before tensile loading, then the anchorage need only be designed to be ductile for shear. A suggested method to provide ductility in such cases is the use of shear lugs with a properly designed concrete reinforcement. Alternatively, the use of the overstrength factor, Ω_o, shown in ACI 318-19, Section 17.10.6.3(c) is permitted.

3.5 ANCHOR REINFORCEMENT DESIGN

When the concrete has insufficient strength to resist tension and shear loads, reinforcing steel must be designed to transfer the loads into the base concrete.

3.5.1 Background

The load transfer method outlined in this section is based on the requirements listed in ACI 318-19, Chapter 17. In the petrochemical and related industries, the

@seismicisolation

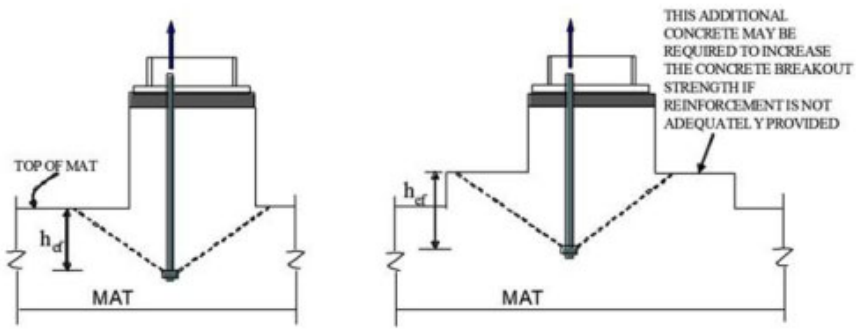

Figure 3-4. Anchor extended into mat.

unreinforced concrete breakout strength in tension and shear is rarely sufficient to exceed the ultimate anchor strength.

It is a construction preference to keep the anchors inside the pedestal and not extend them into the mat or footing. However, in some cases, this preference may not be practical. If the anchor extends into the mat, the concrete breakout strength in the mat must be checked with the effective embedment depth measured from the top of the mat (Figure 3-4) assuming that reinforcement is not adequately lapped to transfer the tension.

3.5.1.1 Supplementary Reinforcement

Supplementary reinforcement is that which acts to restrain the potential concrete breakout but is not designed to transfer the full design load from the anchors into the structural member. An explicit design and a full development of supplementary reinforcement is not required. However, it is recommended that the supplementary reinforcement be arranged to tie the potential failure prism to the structural member (oriented in the direction of the load so that it will be under tension load), similar to the arrangement of anchor reinforcement. Because supplementary reinforcement can improve the deformation capacity for the breakout mode, if supplementary reinforcement is provided to tie the potential failure prism to the structural member ACI 318-19, Tables 17.5.3(b) and (c) permits the use of a higher-strength reduction factor ϕ for all concrete failure modes, except for pullout and pryout strengths.

3.5.1.2 Anchor Reinforcement

Anchor reinforcement is designed and detailed specifically to transfer the full design load from the anchors into the structural member. An explicit design and full development of anchor reinforcement is required. Where anchor reinforcement is developed on both sides of the breakout surface in accordance with ACI 318-19, Chapter 25, the design strength of the anchor reinforcement is permitted to be used instead of the concrete breakout strength to determine ϕN_n and ϕV_n (ACI 318-19, Section 17.5.2.1). For practical reasons, the use of anchor reinforcement

@seismicisolation

is usually limited to cast-in-place anchors because there is insufficient lap length between post-installed anchors and reinforcing steel.

3.5.2 Reinforcement Methods

The concrete reinforcement needed to develop anchor loads should be designed in accordance with ACI 318-19 and the following:

1. Anchor force is assumed to be resisted only by the reinforcement; that is, there should be no load sharing between the concrete section and the reinforcement. Reinforcement is fully activated only after a concrete breakout cone has developed.
2. Anchor reinforcement may be provided by a single layer or multiple layers of reinforcement, inverted hairpin reinforcement, edge angles attached with anchored reinforcement, spiral reinforcement, or horizontal ties to resist tension, shear, and lateral bursting. Although these alternatives provide valid options from an engineering point of view, they may cause construction difficulties owing to the congestion of reinforcement. Thus, engineering judgment is required to determine which alternative is the most appropriate for a given installation.
3. Anchor tension force is transferred to reinforcement parallel to the anchor. This reinforcement most commonly consists of straight dowels in the pedestal with 90-degree hooks extending into the footing or mat. If the anchor length is too long because of l_d requirements, and additional dowels are not practical, 90-degree or 180-degree hooked bars at the top of the pedestal may be used to reduce the anchor embedment to l_{dh}. This option should be used as the last resort because of constructability considerations (Figure 3-5).
4. When anchors are used to transfer shear, shear reinforcement is typically required, because minimal edge distances and anchor spacing make it difficult to develop the required anchor strength in the concrete member without the use of reinforcement.
5. When planning the arrangement of reinforcement, the clearance requirements for placing and vibrating concrete and the minimum bar spacing requirements of ACI 318-19 should be considered.
6. If the side-face blowout resistance is less than the required strength, either the edge distance, the bearing area of the anchor head, or both should be increased. Reinforcement near the embedded anchor head or nut may be provided to improve the ductility related to concrete side-face blowout. Cannon et al. (1981) recommended that spiral reinforcement be installed around the head to provide concrete confinement. DeVries et al. (1998) found that transverse reinforcement (ties) did not increase the side-face blowout capacity, and a large amount of transverse reinforcement installed near the anchor head only increased the magnitude of load that was maintained after the side-face blowout failure occurred (i.e., ductility was increased).

@seismicisolation

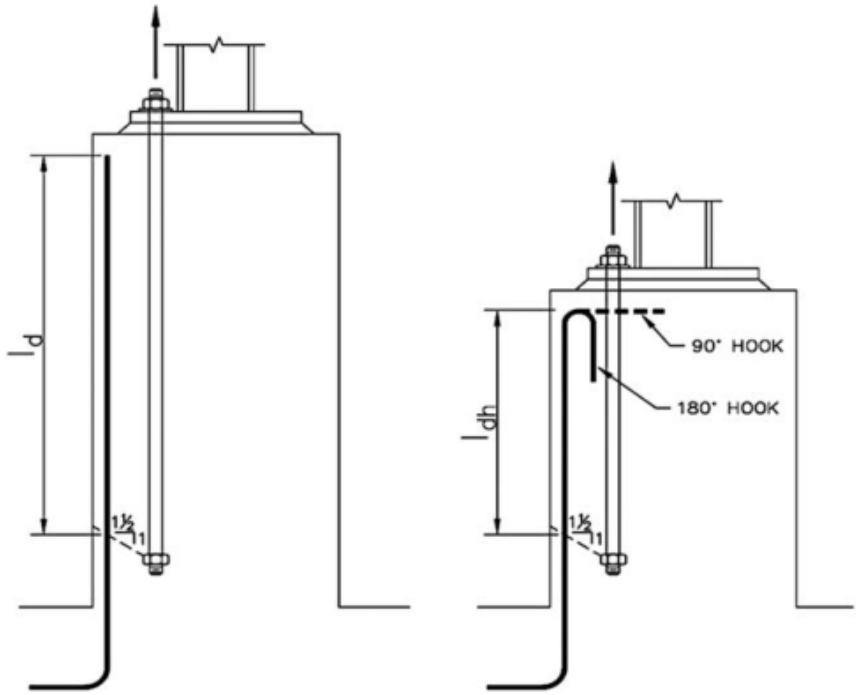

Figure 3-5. Tension transferred to reinforcement parallel to anchor.

Therefore, where there is a realistic possibility of a side-face blowout, the Responsible Engineer should make all efforts to change the bolt layout, concrete configuration, or the anchor head-bearing area to preclude blowout before committing to a solution that relies on supplemental reinforcing steel. See Section 3.5.3.1.3 for more details on side-face blowout reinforcement.

7. Rebar development length should be adequate to fully develop the required load on both sides of the failure surface in accordance with ACI 318-19.
8. Failure surface resulting from the applied tension load should be in accordance with ACI 318-19, Figure R17.6.2.1 for single anchors and group anchors.
9. Failure surface resulting from the applied shear load should be in accordance with ACI 318-19, Figure R17.7.2.1a. For multiple anchors closer together than three times the edge distance, c_{a1}, the failure surface is from the outermost anchors in accordance with ACI 318-19, Figure R17.7.2.1b.

3.5.3 Reinforcement Design to Transfer Anchor Forces

ACI 318-19, Section 17.5.3 states that in sizing the anchor reinforcement, the strength reduction factor ϕ should be 0.75. The same strength reduction factor is used for the strut-and-tie method (STM) [ACI 318-19, Table 21.2.1(g)], implying

@seismicisolation

that the use of the STM design approach in designing anchor reinforcement is an acceptable design approach.

The STM is an ultimate strength design method based on the formation of a truss that transmits forces from loading points to supports. The STM uses concrete struts to resist compression and reinforcing ties to carry tension. Design using the STM involves calculating the required amount of reinforcement to serve as the tension ties and then checking that the compressive struts and nodal zones (joints) are sufficiently large to support the forces. A key advantage of design using the STM is that the Responsible Engineer can visualize the flow of stresses in the member. Although the STM is a conceptually simple design tool, it requires assumptions for the following items:

1. Capacity of struts and nodes,
2. Geometry of struts and nodal zones, and
3. Anchorage of tie reinforcement.

3.5.3.1 Tension Force

Tension force in anchors induces tensile stress in concrete due to bearing at the embedded anchor head or nut, which, in turn, induces lateral bursting forces. A recommended arrangement of reinforcement for resisting concrete tensile stress in pedestals of square, rectangular, and octagonal cross sections is shown in Figures 3-6 and 3-7.

3.5.3.1.1 Recommended Location of Anchor Reinforcement for Tension

There is currently no available test data that can be used to strongly recommend the location of anchor reinforcement in typical pedestals. Without such data, it is prudent and good practice to place anchor reinforcement as close as practicable to the anchor to prevent any unknown failure mechanism. The following discussion provides guidance on the acceptable spacing limits:

1. Cannon et al. (1981) indicated that for hairpin reinforcement to effectively intercept the potential failure planes, each leg should be located within $h_{ef}/3$ from the edge of an anchor head, where h_{ef} is the effective embedment depth of the anchor. However, no test data were referenced as the basis for the recommendation.
2. In the first edition of this publication, it is stated that to be considered effective, the distance of the reinforcement from the edge of the anchor head should not exceed the lesser of $h_{ef}/5$ or 6 in. (150 mm).
3. Comite Euro-International Du Beton (1997) recommended that the reinforcement be placed as close as possible to the headed anchors (and preferably be tied to the anchors).
4. Lee et al. (2007) stated that supplementary hairpin reinforcement might be used to increase the concrete breakout strength if arranged in a manner similar to that tested [$\leq$4 in. (100 mm), or $\leq$ $0.15h_{ef}$ from the anchor].

@seismicisolation

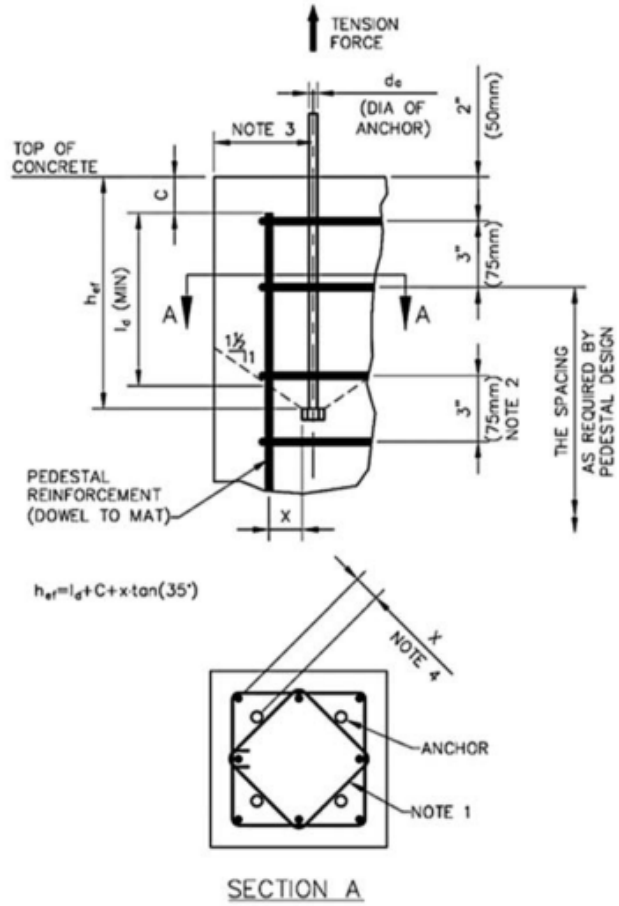

Figure 3-6. Reinforcement for resisting anchor tension in square and rectangular pedestals.

Notes:

1. Provide interior ties if required according to ACI 318.
2. A minimum of two sets of ties at 3 in. (75 mm) spacing, centered at the bearing surface of the anchor head, for high-strength anchors only.
3. $4d_a$ or 4.5 in. (115 mm) minimum for mild steel [36 ksi (250 MPa)] anchors. $6d_a$ or 4.5 in. (115 mm) minimum for high-strength anchors.
4. See Section 3.5.3.1.1 for various recommendations on the maximum distance between anchor and anchor reinforcement.

However, they also indicated that their test results cannot be used to develop a general design model for anchors with supplementary reinforcement because of limited test data.

5. ACI 318-19, Figure R17.5.2.1a indicates that reinforcement should be placed as close as practicable but not more than $0.5h_{ef}$ from the anchor centerline.

@seismicisolation

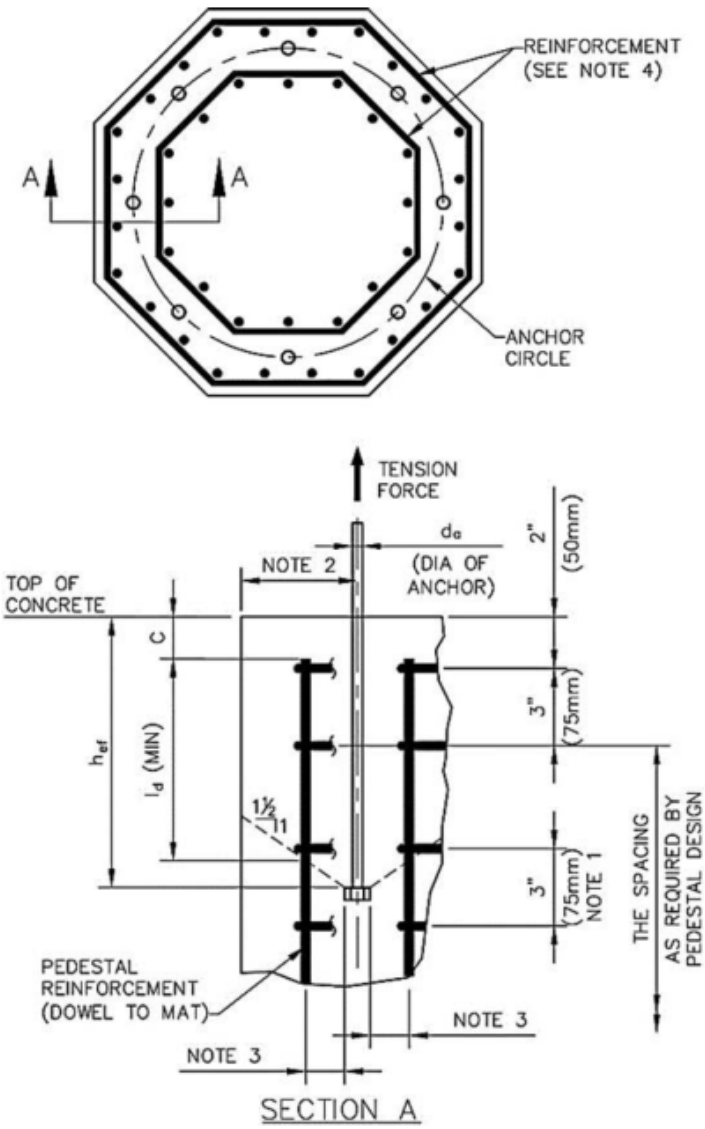

Figure 3-7. Reinforcement for resisting anchor tension in octagonal pedestals.

Notes:

1. Provide a minimum of two sets of ties at 3 in. (75 mm) spacing, centered at the bearing surface of the anchor head, for high-strength anchors only.
2. $4d_a$ or 4.5 in. (115 mm) minimum for mild steel [36 ksi (250 MPa)] anchors. $6d_a$ or 4.5 in. (115 mm) minimum for high-strength anchors.
3. See Section 3.5.3.1.1 for various recommendations on the maximum distance between anchor and anchor reinforcement.
4. Dowels and ties on the inside of the anchor circle are required only if dowels and ties on the outside of the anchor circle are not sufficient for reinforcing the concrete for anchor loads.

@seismicisolation

This recommendation is based on the research of embedded studs with hairpin reinforcement using a maximum diameter similar to that of a No. 5 bar.

3.5.3.1.2 Concrete Breakout

Vertical reinforcement intersects potential crack planes adjacent to the anchor head, thus transferring the tension load from the anchor to the reinforcement. Proper reinforcement development length is required to develop the required strength both above and below the failure plane-reinforcement intersection.

The minimum required area of vertical reinforcement for tension per anchor, A_{st}, where anchor ductility is not required, is described in Equation (3-4):

$$A_{st} \geq \frac{N_{ua}}{\phi f_y} \tag{3-4}$$

Design for anchor ductility requires that the necessary conditions for elongation over a reasonable gauge length are fulfilled; that is, that strain localization will not limit the yield strain. This may involve the use of upset threads (Section 2.2.5.3) or other detailing methods to avoid strain localization. Furthermore, if it is desired that yielding of the anchor provide the required ductility in the connection, the reinforcement should be proportioned to develop the strength of the anchor, as described in Equation (3-5):

$$A_{st} \geq A_{se,N} \frac{f_{uta}}{f_y} \tag{3-5}$$

where

A_{st} = Minimum required area of vertical reinforcement for tension per anchor, in.^{2} (mm^2);
$A_{se,N}$ = Effective cross-sectional area of the anchor in tension, in.^{2} (mm^2);
N_{ua} = Factored tensile force applied to the anchor, lb (N);
ϕ = Strength reduction factor = 0.75;
f_y = Specified yield strength of reinforcement, psi (MPa); and
f_{uta} = Specified tensile strength of the anchor steel, psi (MPa).

Where ductility cannot be achieved and the anchor is sized for factored tension design loads T_u^E, the reinforcement should be designed according to the following equation, thus satisfying 2021 International Building Code (IBC) (ICC 2021) and ASCE 7-16 (ASCE 2017) requirements for Seismic Design Category C, D, E, or F.

$$A_{st} \geq \frac{T_u^E}{\phi f_y}$$

where T_u^E is the factored tension design load from load combinations that include an overstrength factor of 2.5 applied to the seismic loads (per anchor), lb (N).

@seismicisolation

When considering the placement of reinforcing bars relative to the anchor, it may be necessary to explicitly consider the effect of the secondary moment caused by the couple between the anchor and the rebar. Alternatively, the reinforcing can be placed symmetrically around the anchor, as shown in Figure 3-6. For typical cases where anchors are embedded in the tops of structural column pedestals, it is usually not required that the reinforcing be placed symmetrically around the bolt because the secondary moments can be accommodated within the section depth.

To limit the embedment length of an anchor, a larger number of smaller-size reinforcing bars is preferred over fewer but larger-size bars. In larger foundations, such as an octagonal pedestal for a vertical vessel, if required to transfer the anchor tension load, two concentric layers of vertical reinforcement may be provided, as shown in Figure 3-7. Tensile loads can be transferred effectively by using hairpin reinforcement or vertical dowels with proper development lengths (Figure 3-5). The area of vertical reinforcement calculated to transfer the tensile loads is not to be considered additive to the reinforcement required strictly for resisting the moment and tension in sections of the pedestal. The calculated area of steel required for resisting the external loads applied to the pedestal should be compared to the area of steel required for resisting the tension in the anchor to determine the appropriate amount of reinforcement needed. The area of vertical reinforcement provided should equal or exceed the area of steel required for resisting the anchor tension or the ultimate capacity ($A_{se,N} \times f_{uta}$) of the anchor if ductility is required.

The development length (l_d or l_{dh}) of reinforcing bars resisting the load should be calculated in accordance with ACI 318-19. The development length may be reduced when excess reinforcement is provided according to ACI 318-19, Section 25.4.10, as long as the restrictions listed in Section 25.4.10.2 are met.

3.5.3.1.3 Side-Face Blowout

Local concrete side-face blowout (lateral bursting) failure is caused by the quasi-hydrostatic pressure in the region of the anchor head (Eligehausen et al. 2006).

Test results for unreinforced concrete have shown that the side-face blowout failure load is independent of the embedment depth, and that the critical edge distance for the failure changes from concrete breakout to side-face blowout is equal to 0.4 times the anchor embedment (Furche and Eligehausen 1991); this research forms the basis for ACI 318-19, Section 17.6.4. However, where anchor reinforcement is provided to prevent the concrete breakout failure mode, the correlation between the critical edge distance and the embedment depth is no longer valid. Therefore, because of the lack of test data on side-face blowout strength in reinforced concrete, side-face blowout strength should be checked using ACI 318-19, Section 17.6.4, regardless of the ratio of embedment depth to edge distance. Due to construction costs and constructability problems, where there is a realistic possibility of side-face blowout, the Responsible Engineer should try to increase the edge distance, bearing area, or concrete strength before committing to a solution that relies on supplemental reinforcing steel.

When reinforcement is used to restrain side-face blowout and improve ductility related to side-face blowout, the reinforcement should have sufficient

@seismicisolation

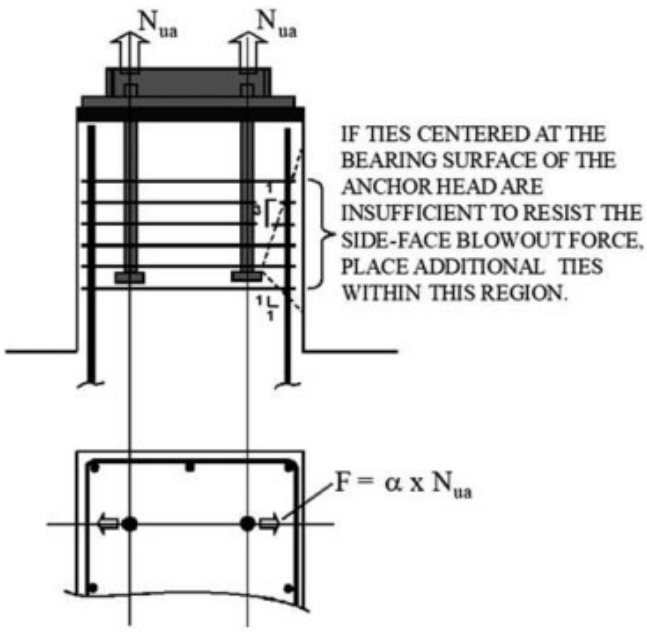

Figure 3-8. Model for designing anchor reinforcement to resist side-face blowout force.

strength and stiffness in the direction of the lateral force causing the side-face blowout.

From a strength perspective, Figure 3-8 shows a recommended model for designing anchor reinforcement to resist side-face blowout force F. In Figure 3-8, the value of α indicates the ratio of side-face blowout force F to the tension force N_{ua}. Research indicates that the magnitude of F depends on the concrete bearing pressure on the anchor head, because the lateral strain in the concrete increases as the bearing pressure increases. Furche and Eligehausen (1991) suggested Equation (3-6):

$$\alpha = 0.11\sqrt{\frac{p}{f_{cc,200}}} \cong 0.11\sqrt{\frac{N_{ua} / A_{brg}}{f_c' / 0.83}} \tag{3-6}$$

where

α = Ratio of F to N_{ua};
F = Side-face blowout force;
N_{ua} = Factored tensile force applied to the anchor;
A_{brg} = Net bearing area of the head or the bearing nut of stud, bolt, or anchor;
$f_{cc,200}$ = Concrete compressive strength based on a 200 mm cube;
f_c' = Specified compressive strength of concrete;
$f_c' / 0.83$ = An approximation of $f_{cc,200}$; and

@seismicisolation

p = Bearing pressure on the head or bearing nut of the anchor, which is equal to the factored tensile force applied to anchor N_{ua} divided by the net bearing area of the anchor head or bearing nut A_{brg}.

Note: See ACI 355.3R-11 (ACI 2011), Appendix A, Table A2 for cast-in-place anchors, threaded rods with nuts, threaded rods with nuts and washers, and the dimensional properties of bolts, studs, and nuts for determining the bearing area (A_{brg}).

Based on extensive nonlinear numerical investigations, Hofmann and Eligehausen (2002) proposed

$$\alpha = 0.045\frac{p}{f_{cc,200}} \cong 0.045\frac{N_{ua} / A_{brg}}{f_c' / 0.83} \leq 0.5 \tag{3-7}$$

Because of the lack of comprehensive test results, this committee recommends that the α value be the maximum from the following:

- $\alpha = 0.25$;
- α from Equation (3-6); and
- α from Equation (3-7).

When the resulting force F exceeds the concrete strength computed by ACI 318-19, Section 17.6.4, anchor reinforcement in the form of regular transverse ties, hairpins, or spiral reinforcement should be designed to carry the side-face blowout force F. For ductile design, F is determined based on the ultimate capacity of the anchor. Because the majority of action occurs at the bearing surface of the anchor head, the anchor reinforcement should be placed as close as possible to the bearing surface of the anchor head. When there is not enough space near the bearing surface of the anchor head for all anchor reinforcement, all reinforcement should be placed within the region shown in Figure 3-8 or 3-9. This recommendation is based on a fracture mechanics model for studying crack propagation around a headed stud (Elfgren et al. 1982) and is based on the observed size of the failure surface shown in Figure 3-9 (Furche and Eligehausen 1991).

It is believed that the effectiveness of anchor reinforcement in resisting the side-face blowout force depends on its location and stiffness. The effectiveness decreases as the distance from the bearing surface of the anchor head increases. It also decreases when the stiffness of anchor reinforcement in the direction of F decreases. For smaller rectangular pedestals, the anchor reinforcement could be in the form of regular transverse ties. For larger rectangular and octagonal pedestals, the anchor reinforcement could be spirals or U-shaped bars (hairpins), where the open legs extend away from the free edge.

3.5.3.1.4 Alternate Model for Tension Loading Using the Strut-and-Tie Model
One possible STM for tension loading is shown in Figure 3-10. Using STM, it is assumed that the diagonal concrete struts propagate radially from the anchor head. As a result of the diagonal concrete struts, there are radially horizontal force

@seismicisolation

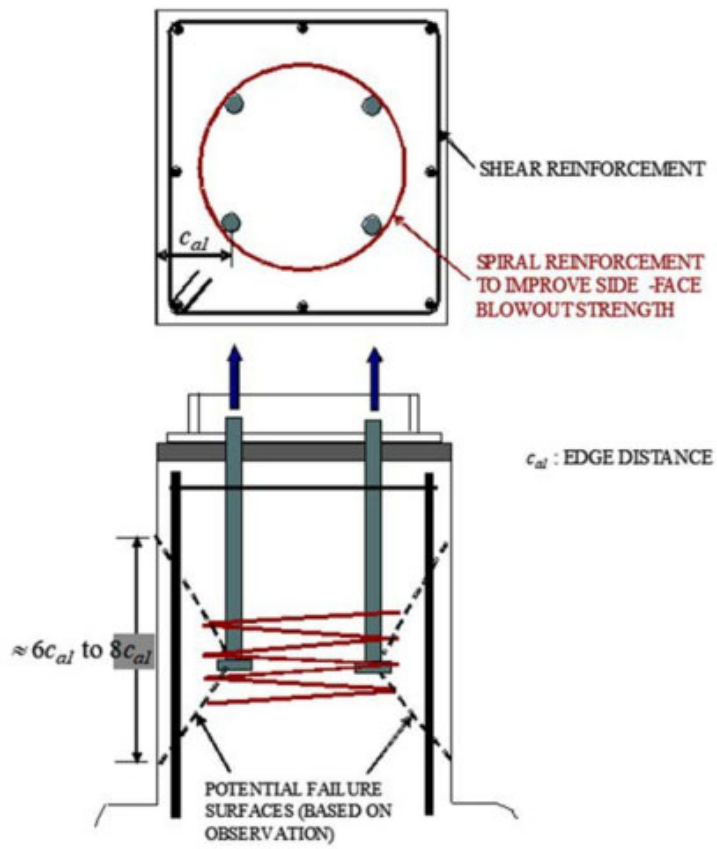

Figure 3-9. Spiral reinforcement at anchor head to improve side-face blowout strength.

components propagating from the anchor head. For clarity, only the horizontal force in one direction is shown in Figure 3-10. This horizontal force component is the force that can cause (1) side-face blowout (lateral bursting) failure when the concrete cover is insufficient, and (2) splitting of cracks when the concrete cover is insufficient.

To be consistent with the notation shown in Figure 3-7, the resultant of the radial horizontal component propagating from the anchor head is denoted *F*. As discussed in Section 3.5.3.1.3, the magnitude of *F* depends on the concrete bearing pressure on the anchor head. Therefore, the angle of diagonal concrete struts also depends on the concrete-bearing pressure on (and, thus, the area of) the anchor head. Instead of one single diagonal strut, most likely there are several diagonal (fan-shaped) struts propagating from the anchor head. As a result, the available area of the nodal zone (where the diagonal struts meet with the vertical reinforcing bars) and the strut area are relatively large. Thus, it is assumed that there is sufficient strength for such nodes and struts in typical concrete pedestals. Because the area of the nodal zone is relatively large, it is also reasonable to assume

@seismicisolation

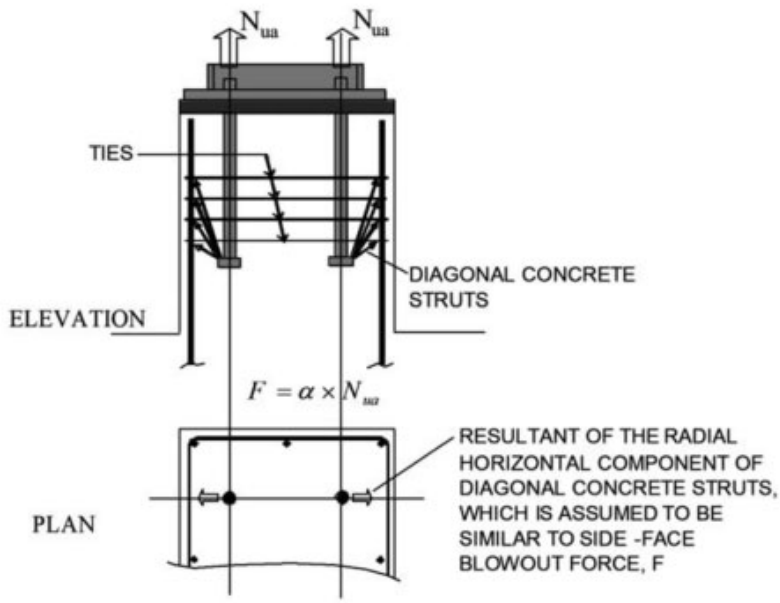

Figure 3-10. Possible STM for tension loading.

that the available length is measured from the intersection between the 35-degree breakout cone angle and the vertical reinforcing bars when checking the available development length of vertical reinforcing bars. This assumption is consistent with the recommendation from Thompson et al. (2006) for the mechanism of force transfer between opposing lapped headed bars: "The angle of concrete struts between opposing lapped headed bars is 35 degrees."

Because the areas of the nodal zone and struts are assumed to be sufficiently large, the STM for tension loading is only used to proportion ties (i.e., vertical reinforcing bars and horizontal ties) based on the overall equilibrium of the system. Based on vertical force equilibrium, the vertical reinforcing bars should be proportioned to carry the total factored tensile force N_u applied to the pedestal. Based on horizontal force equilibrium, the ties should be proportioned to carry the total horizontal side-face blowout force F and distributed within the recommended region shown in Figure 3-8.

3.5.3.2 Shear Force

Shear may be transferred by frictional resistance between the base plate and the concrete, with the anchors used only for the transfer of tension. For large shear forces, where frictional resistance (Section 3.6) is insufficient, shear lugs or anchors may be used to transfer the load. Then, the shear forces must be carried by the concrete or reinforcement.

Where anchors are used to transfer shear, reinforcement is typically required, because it is usually difficult to develop the anchor loads only in the concrete

@seismicisolation

member. This is because of limited concrete breakout strength due to small edge distances and anchor spacing. Shear reinforcement should be designed to carry the entire shear load, excluding any contribution from concrete. Strut-and-tie models can be used to analyze shear transfer to closed ties.

Several shear reinforcement configurations can be considered to prevent failure of the concrete, such as hairpins, anchored reinforcement, closed ties, and shear angles [see Figures 3-11 through 3-14 adapted from PIP STE05121 (PIP 2018), *Application of ASCE Anchorage Design for Petrochemical Facilities*]. For ductile design, the shear reinforcement should be designed to develop the ultimate shear capacity of the anchors. Alternatively, for cases involving seismic loading, the shear reinforcement can be designed for load combinations that include an overstrength factor of 2.5 applied to the seismic loads.

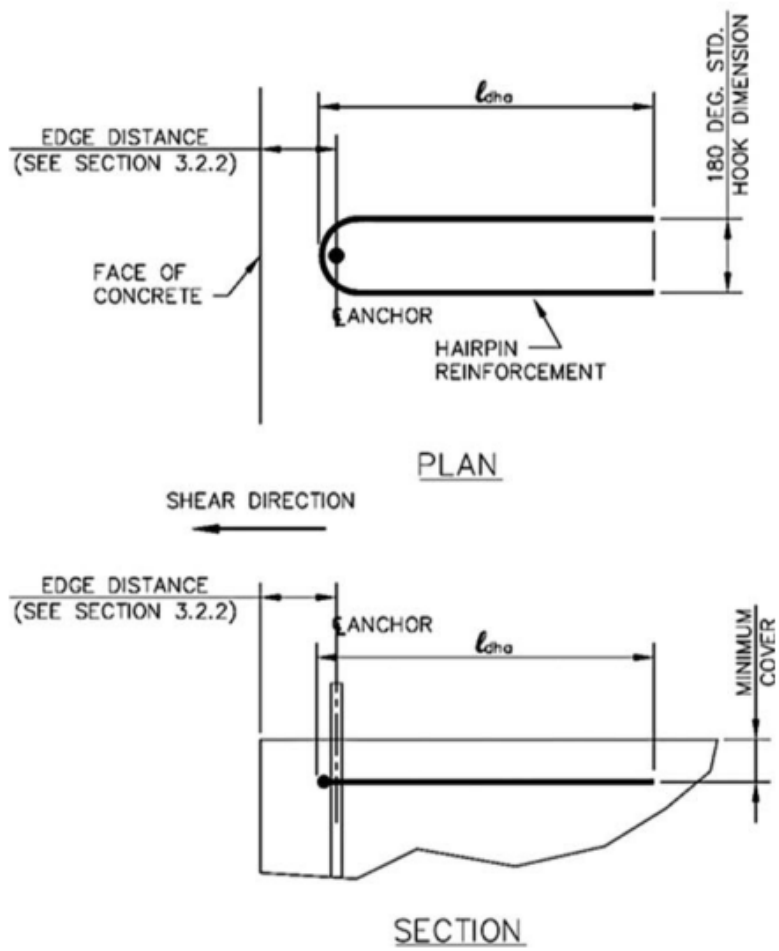

Figure 3-11. Horizontal hairpin.

Source: Adapted and reproduced with permission from PIP, © 2022 University of Texas at Austin.

@seismicisolation

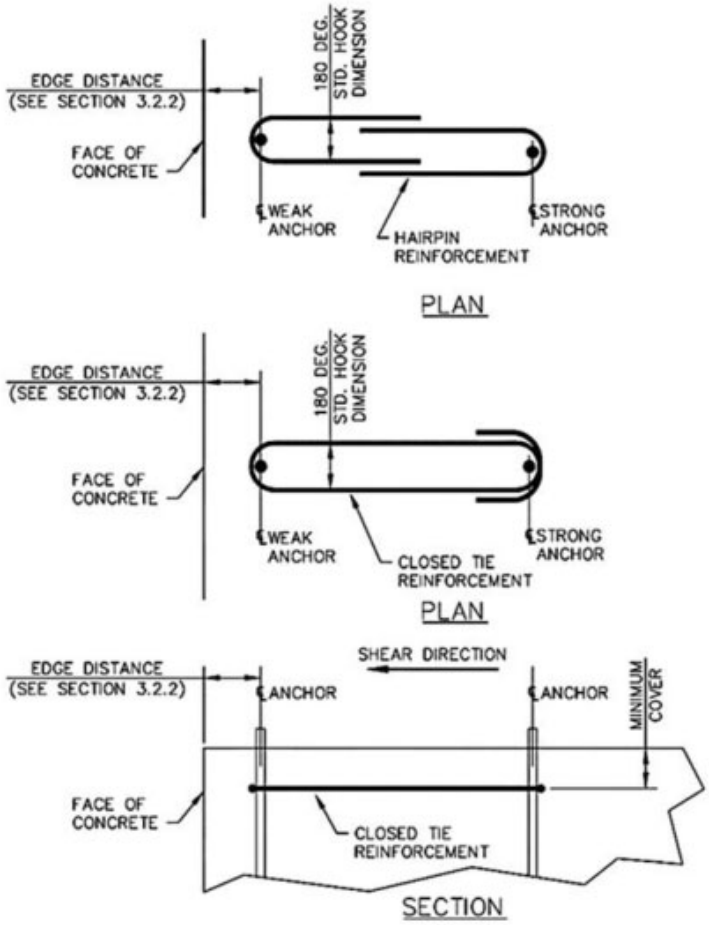

Figure 3-12. Closed ties.

Source: Adapted and reproduced with permission from PIP, © 2022 University of Texas at Austin.

3.5.3.2.1 Recommended Location of Anchor Reinforcement for Shear

For shear loading, ACI 318-19, Section 17.5.2.1(b) indicates that anchor reinforcement should either be developed in accordance with ACI 318-19, Chapter 25 on both sides of the breakout surface or should enclose the anchor and be developed beyond the breakout surface. To ensure yielding of the anchor reinforcement, the enclosing anchor reinforcement should be in contact with the anchor and placed as close as practicable to the concrete surface. ACI 318-19 is based on research with the maximum diameter of the anchor reinforcement similar to that of a No. 5 bar (16 mm). When a grid of a surface reinforcement is used as anchor reinforcement (Figure 3-15), only reinforcement spaced lesser than $0.5c_{a1}$ and $0.3c_{a2}$ from the anchor centerline should be included as anchor reinforcement, as shown by research, with the maximum diameter of the anchor

@seismicisolation

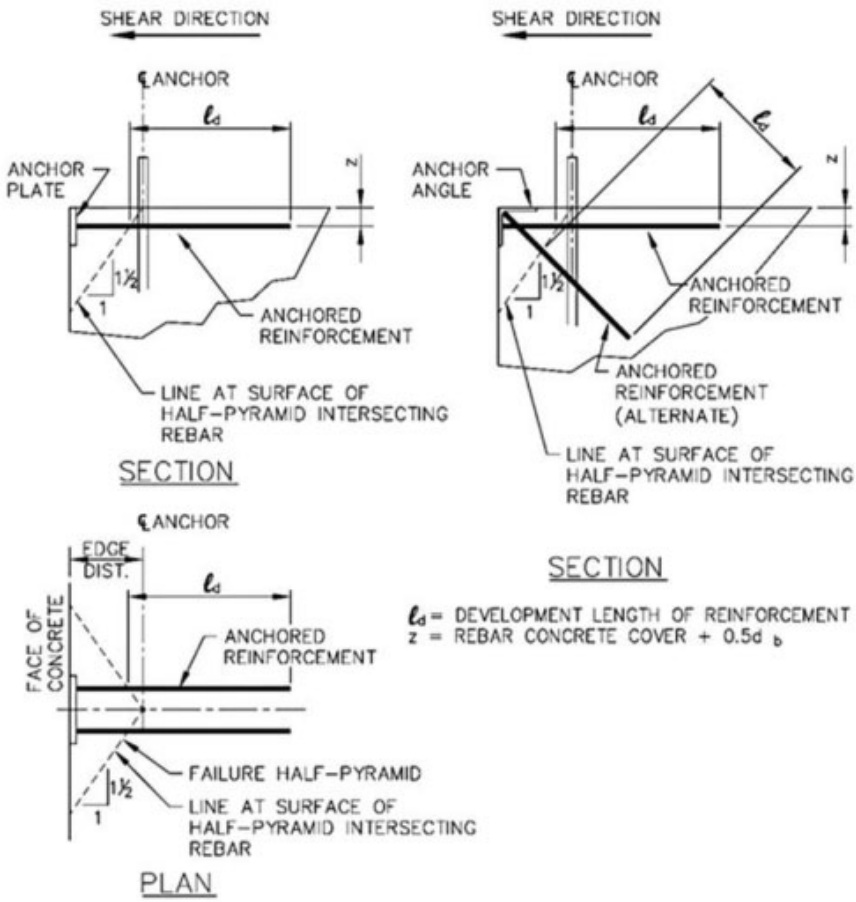

Figure 3-13. Anchored reinforcement.

Source: Adapted and reproduced with permission from PIP, © 2022 University of Texas at Austin.

reinforcement similar to that of a No. 6 bar (19 mm). For equilibrium, edge reinforcement is required.

3.5.3.2.2 Alternate Model for Shear Loading Using the Strut-and-Tie Model

The advantage of using the strut-and tie model (STM) for analyzing shear transfer and designing shear reinforcement for pedestal anchorages is the elimination of questionable assumptions related to the size and shape of the concrete breakout cone, the crack location (whether the shear cracks propagate from the middle of pedestals, front-row anchors, or back-row anchors), and the amount of shear reinforcement that is effective to restrain the concrete breakout cone.

One possible STM for shear loading on a rectangular pedestal is shown in Figure 3-16.

@seismicisolation

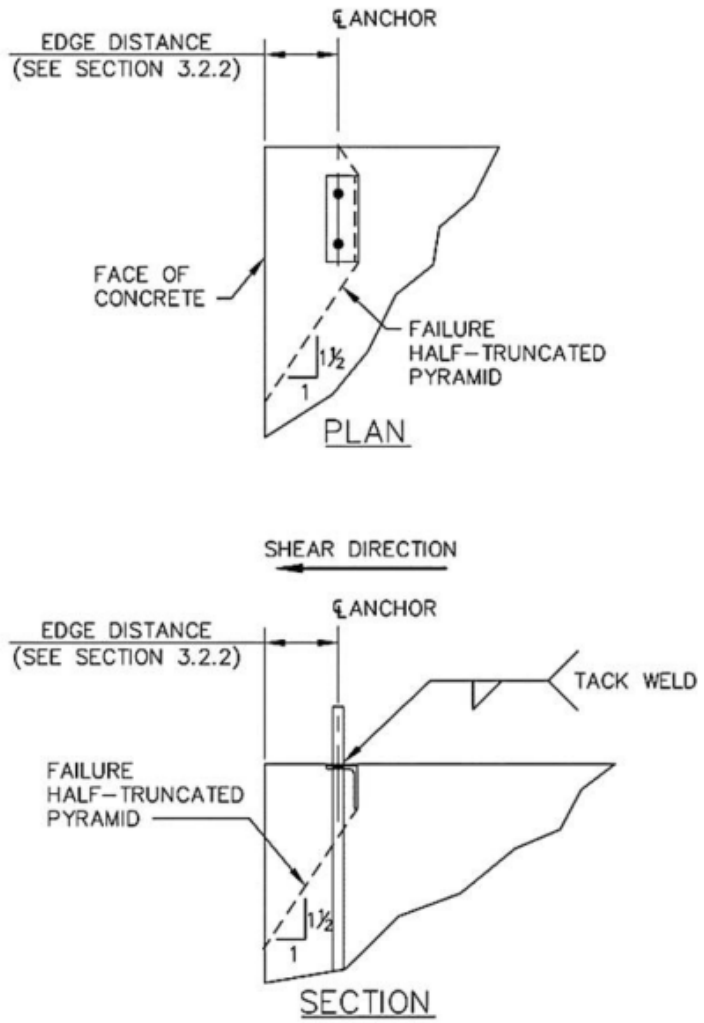

Figure 3-14. Shear angles.

Source: Adapted and reproduced with permission from PIP, © 2022 University of Texas at Austin.

The following assumptions are suggested to proceed with the use of the STM for shear transfer analysis on pedestal anchorage and for designing the anchor shear reinforcement:

1. Concrete strength for struts and bearings f_{ce} is $0.85f_c'$ based on ACI 318-19, Chapter 23. This assumption is conservative, considering the significant amount of confinement in pedestals.

@seismicisolation

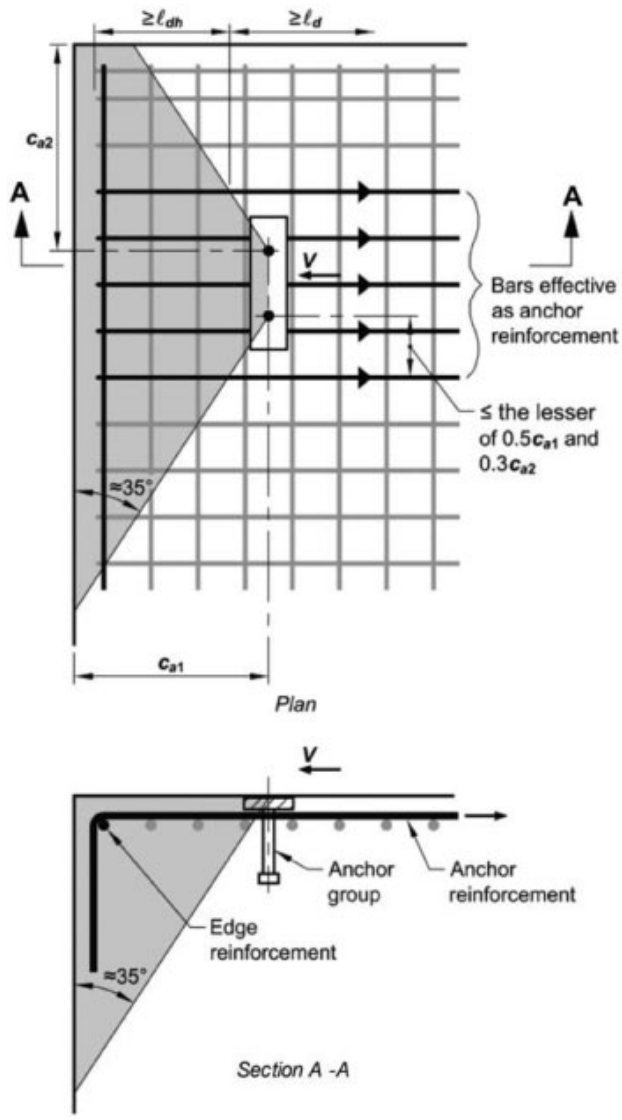

Figure 3-15. Grid of surface reinforcement as an anchor reinforcement for shear loading.

Source: © American Concrete Institute, ACI 318-19 (ACI 2019a).

2. Concrete struts from anchors to a vertical rebar are shown in Figure 3-17. ACI 318-19, Section 17.7.2.2.1 indicates that the maximum load-bearing length of the anchor for shear is $8d_a$. Therefore, the bearing area of the anchor is assumed to be $(8d_a)d_a = 8d_a^2$. The compressive force from the anchor to the rebar is assumed to spread with a slope of 1.5 to 1. When the internal ties are not required (the case where axial force in the pedestal is so

@seismicisolation

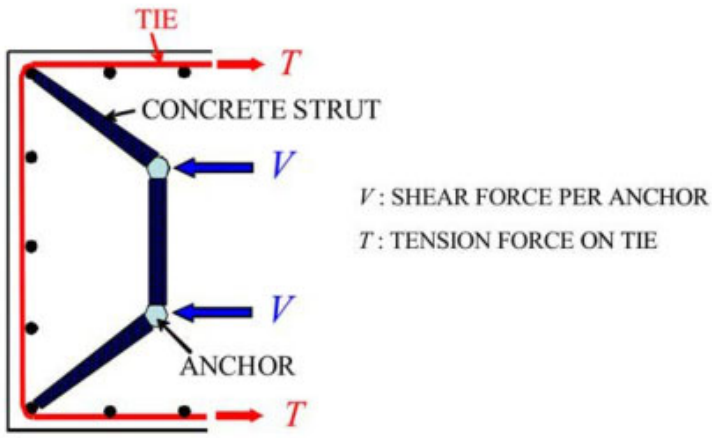

Figure 3-16. STM without internal ties.

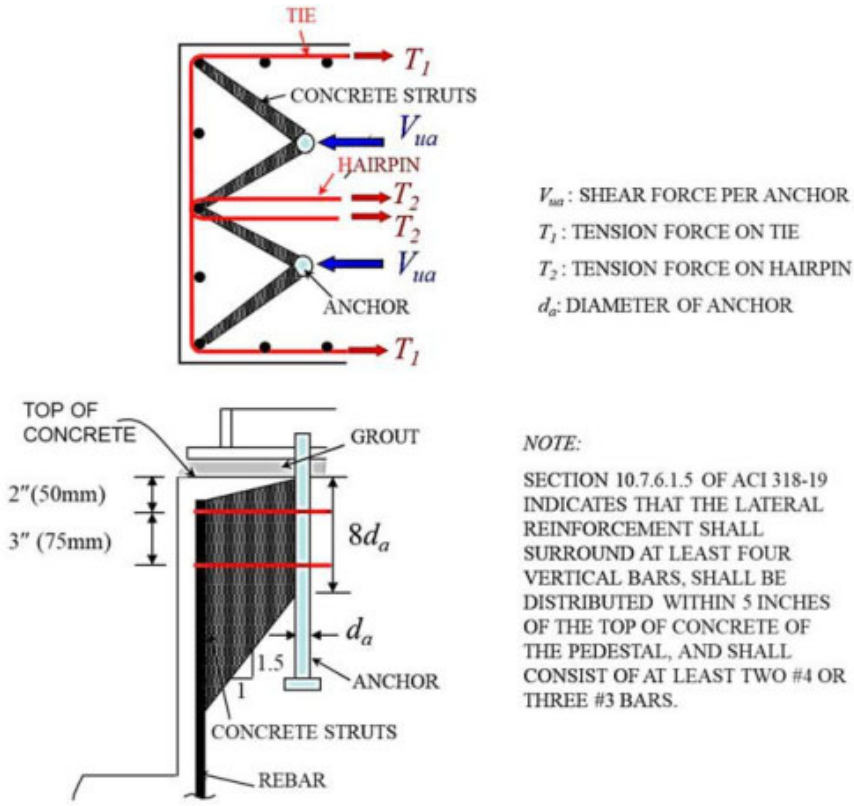

NOTE:

SECTION 10.7.6.1.5 OF ACI 318-19 INDICATES THAT THE LATERAL REINFORCEMENT SHALL SURROUND AT LEAST FOUR VERTICAL BARS, SHALL BE DISTRIBUTED WITHIN 5 INCHES OF THE TOP OF CONCRETE OF THE PEDESTAL, AND SHALL CONSIST OF AT LEAST TWO #4 OR THREE #3 BARS.

Figure 3-17. Concrete struts and tension ties for carrying anchor shear force.

@seismicisolation

small that ACI 318-19, Section 25.7.2.3 does not apply), the STM shown in Figure 3-16 can be used. For a given anchor shear, V_{ua}, the tension tie force T in Figure 3-16 is larger than T_1 in Figure 3-17.

3. For tie reinforcement, and with reference to Figure 3-18, the following assumptions are suggested:
   (a) Only the uppermost two layers of ties [the ASCE Committee recommends two No. 4 (13 mm) ties within 5 in. (125 mm) of the top of the pedestal as required by ACI 318-19, Section 10.7.6.1.5] are effective.
   (b) Tie reinforcement should consist of ties with seismic hooks. If internal ties are required, hairpins could be used. As an alternative, diamond-shaped ties can also be used.

   Note: Moderate to high seismic design requires 135-degree hooks.

   (c) The location of hooks and the direction of hairpins should be alternated as shown.
   (d) If the available development length of hairpin, l_{dha}, is shorter than the required straight development length for a fully developed hairpin, l_{dh}, the maximum yield strength that can be developed in a hairpin is

$$f_y \times \frac{l_{dha}}{l_{dh}}$$

   where f_y is the yield strength of the hairpin. If l_{dha} is shorter than 12 in. (300 mm) (i.e., the minimum development length based on ACI 318-19, Section 25.4.2), then a hairpin should not be used.

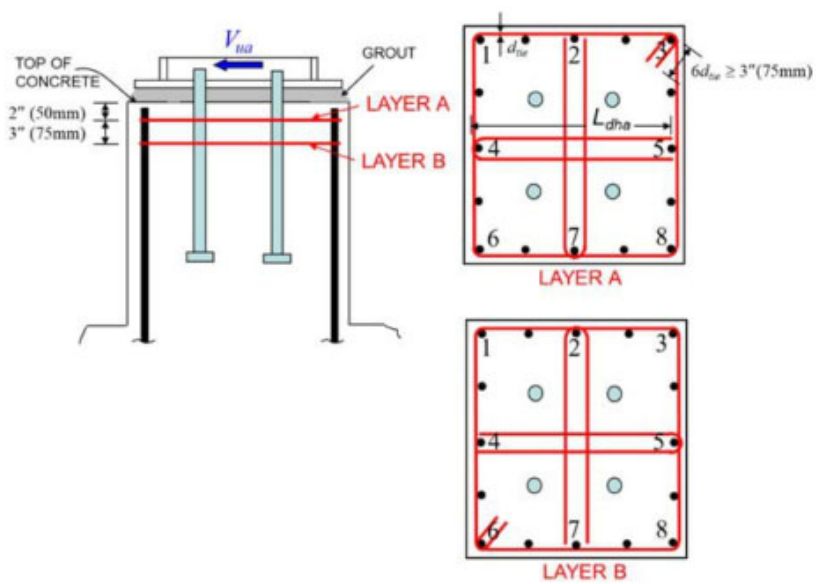

Figure 3-18. Alternated direction of hooks and hairpins for the upper two layers of ties.

@seismicisolation

Figure 3-19. Bearing of J-shape bar on concrete and bearing of conventional stirrup on rebar.

(e) Away from the hook, the tie is assumed to be fully developed. For example, under the shear force V_{ua}, the tie on layer A can develop f_y at nodes 1 and 6.

(f) At the node where the hook is located, the tie cannot develop f_y. For example, under the shear force V_{ua}, although the tie on layer A can develop f_y at node 6, the tie on layer B cannot, because the hook of the tie on layer B is located at node 6. To calculate the contribution of the tie on layer B to the tension tie at node 6, and with reference to Figure 3-19, the stiffness of a hooked bar bearing on concrete [Case 1—a smooth rebar with a 180-degree hook bearing in concrete (Fabbrocino et al. 2005)] is compared to the stiffness of a hooked bar bearing on rebar [Case 2—the conventional single-leg stirrup with reinforcing bars inside the bends (Leonhardt and Walther 1965, as cited in Ghali and Youakim 2005)].

Although the capacity of Case 2 may be higher than that of Case 1 because of the bearing on the rebar of a larger size than the stirrup, contact may not always be present because of common imprecise workmanship. When the contact is not present, Case 2 is assumed to behave as Case 1. Leonhardt and Walther (1965) found that to develop f_y on the bends of 90-, 135-, and 180-degree hooks when engaging bars located inside the bends (Case 2), there was a slip of about 0.2 mm (0.0079 in.). Based on the test results of Fabbrocino et al. (2005), the stress that was developed at the hook of the smooth rebar with a 180-degree hook bearing in concrete when it slipped 0.2 mm (0.0079 in.) was about 20 ksi (138 MPa). Therefore, it is assumed that the tie can develop only 20 ksi (138 MPa) at the node where the hook is located.

3.5.4 Tables to Aid Responsible Engineers in Reinforcement Design

Tables 3-3 and 3-4 show reinforcing steel capacities and development lengths for various concrete covers in US customary and metric (SI) units, respectively. These are used for anchor reinforcement. The development lengths are for 4,000 psi (28 MPa) concrete, but development length multiplication factors are provided for other concrete strengths. The Responsible Engineer needs to make sure that reinforcing steel is developed on both sides of a theoretical crack plane in the concrete.

Tables 3-5 and 3-6 show the details of hook and hairpin reinforcing steel along with their capacities in US customary and metric (SI) units, respectively. The hook dimensions are provided for 4,000 psi (28 MPa) concrete, but factors are provided for other concrete strengths.

@seismicisolation

Table 3-3. Reinforcement Tensile Capacity and Tensile Development Length—US Customary Units

			Cover = 1.5 in.				Cover = 2 in.				Cover = 2 1/2 in. and greater			
	Bar area	Bar capacity	c_b (Cover + half bar diam.)	Min. spacing ($2 * c_b$)	Tension development length, l_d		c_b (Cover + half bar diam.)	Min. spacing ($2 * c_b$)	Tension development length, l_d		c_b (cover + half bar diam.)	Min. spacing ($2 * c_b$)	Tension development length, l_d	
	A_s	$f^*A_s^*(f_y)$												
Bar size	in.^{2}	kips	in.	in.	Other in.	Top in.	in.	in.	Other in.	Top in.	in.	in.	Other in.	Top in.
No. 3	0.11	5.9	1.69	3 3/8	12	12	2.19	4 3/8	12	12	2.69	5 3/8	12	12
No. 4	0.20	10.8	1.75	3 1/2	12	15	2.25	4 1/2	12	15	2.75	5 1/2	12	15
No. 5	0.31	16.7	1.81	3 5/8	15	19	2.31	4 5/8	15	19	2.81	5 5/8	15	19
No. 6	0.44	23.8	1.88	3 3/4	18	23	2.38	4 3/4	18	23	2.88	5 3/4	18	23
No. 7	0.60	32.4	1.94	3 7/8	29	37	2.44	4 7/8	25	33	2.94	5 7/8	25	33
No. 8	0.79	42.7	2.00	4	36	47	2.50	5	29	37	3.00	6	29	37
No. 9	1.00	54.0	2.06	4 1/8	44	58	2.56	5 1/8	36	46	3.06	6 1/8	33	42
No. 10	1.27	68.6	2.14	4 1/4	54	70	2.64	5 1/4	44	57	3.14	6 1/4	37	48
No. 11	1.56	84.2	2.21	4 3/8	65	84	2.71	5 3/8	53	68	3.21	6 3/8	45	58

Source: Adapted and reproduced with permission from PIP, © 2022 University of Texas at Austin.

Note: To get development lengths for the values of f_c' other than 4,000 psi, multiply the development length by $63.24/[f_c']^{1/2}$. For example, for $f_c' = 5{,}000$ psi, the development length, l_d, for OTHER No. 8 bars with a 1 1/2-in. cover would be $36*63.24/(5{,}000)^{1/2} = 36*63.24/70.7 = 32.2$ in. (l_d should not be less than 12 in.).

Reinforcement yield strength, $f_y = 60{,}000$ psi; compressive strength of concrete, $f_c' = 4{,}000$ psi; design tensile strength reduction factor, $\phi = 0.90$ (ACI 318-19, Section 21.2.1); reinforcement location factor, $\psi_t = 1.3$ (top reinforcement), 1.0 (other reinforcement); coating factor, $\psi_e = 1.0$ (uncoated reinforcement); reinforcement size factor, $\psi_s = 0.8$ ($\leq$ No. 6 bar),=1.0 ($\geq$ No. 7 bar); reinforcement grade factor, $\psi_g = 1.0$ (Grade 60); lightweight concrete factor, $l = 1.0$ (normal weight concrete); transverse reinforcement index, $K_{tr} = 0$ (design simplification); tension development length $= l_d = d_b\ (3/40)\ [f_y/(f_c')^{1/2}]\ (\psi_t\psi_e\psi_s\psi_g)/[l\ (c_b + K_{tr})/d_b]$ ACI 318-19 (25.4.2.4a), where $(c_b + K_{tr})/d_b \leq 2.5$ and c_b is smaller than either the distance from the center of the bar to the nearest concrete surface or that from one-half of the center-to-center spacing of the bars (ACI 318-19, Section 25.4.2.4, Min. of 12 in. according to Section 25.4.2.1).

Development lengths for TOP bars and OTHER bars are provided. In the typical case where bars that lap with anchors are only vertical, the development length for only OTHER bars is needed. The development length for TOP bars is provided for rare cases where an anchor is put in horizontally and for information for nonanchor use of a rebar.

@seismicisolation

Table 3-4. Reinforcement Tensile Capacity and Tensile Development Length—Metric (SI) Units.

			Cover = 40 mm				Cover = 50 mm				Cover = 65 mm and greater			
Bar size (mm)	Bar area A_s mm²	Bar capacity $f^*A_s^*(f_y)$ kN	c_b (Cover + half bar diam.) mm	Min. spacing ($2 * c_b$) mm	Tension development length, l_d Other mm	Tension development length, l_d Top mm	c_b (Cover + half bar diam.) mm	Min. spacing ($2 * c_b$) mm	Tension development length, l_d Other mm	Tension development length, l_d Top mm	c_b (Cover + half bar diam.) mm	Min. spacing ($2 * c_b$) mm	Tension development length, l_d Other mm	Tension development length, l_d Top mm
No. 10	71	27	45	90	300	300	55	110	300	300	70	140	300	300
No. 13	129	49	46	95	300	390	56	115	300	390	71	145	300	390
No. 16	199	75	48	100	370	480	58	120	370	480	73	150	370	480
No. 19	284	107	50	100	450	580	60	120	450	580	75	150	450	580
No. 22	387	146	51	105	700	910	61	125	650	840	76	155	650	840
No. 25	510	193	53	105	890	1150	63	125	750	970	78	155	740	960
No. 29	645	244	54	110	1,100	1430	64	130	930	1,210	79	160	830	1,080
No. 32	819	310	56	115	1,350	1750	66	135	1,140	1,480	81	165	940	1,220
No. 36	1006	380	58	120	1,600	2080	68	140	1,370	1,780	83	170	1,120	1,450

Source: Adapted and reproduced with permission from PIP, © 2022 University of Texas at Austin.

Note: To get development lengths for the values of f_c' other than 28 MPa, multiply the development length by $5.29/[f_c']^{1/2}$. For example, for $f_c' = 35$ MPa, the development length, l_d, for OTHER No. 25 bars with a 40-mm cover would be $890*5.29/(28)^{1/2} = 890*5.29/5.92 = 795$ mm (l_d should not be less than 300 mm).

Reinforcement yield strength, $f_y = 420$ MPa; compressive strength of concrete, $f_c' = 28$ MPa; design tensile strength reduction factor, $\phi = 0.90$ (ACI 318M-19, Section 21.2.1) (ACI 2019b); reinforcement location factor, $\psi_t = 1.3$ (top reinforcement), 1.0 (other reinforcement); coating factor, $\psi_e = 1.0$ (uncoated reinforcement); reinforcement size factor, $\psi_s = 0.8$ ($\leq$ No. 19 bar),=1.0 ($\geq$ No. 22 bar); reinforcement grade factor, $\psi_g = 1.0$ (Grade 60); lightweight concrete factor, $l = 1.0$ (normal weight concrete); transverse reinforcement index, $K_{tr} = 0$ (design simplification); tension development length $= l_d = d_b$ (1/1.1) $[f_y/(f_c')^{1/2}]$ $(\psi_t\psi_e\psi_s\psi_g)/[l\ (c_b + K_{tr})/d_b]$ ACI 318M-19 (25.4.2.4a) where $(c_b + K_{tr})/d_b \leq 2.5$ and c_b is smaller than either the distance from the center of the bar to the nearest concrete surface or that from one-half of the center-to-center spacing of the bars (ACI 318M-19, Section 25.4.2.4, Min. of 300 mm according to Section 25.4.2.1).

Development lengths for TOP bars and OTHER bars are provided. In the typical case where bars that lap with anchors are only vertical, the development length for only OTHER bars is needed. The development length for TOP bars is provided for rare cases where an anchor is put in horizontally and for information for nonanchor use of a rebar.

@seismicisolation

Table 3-5. Standard Hook and Hairpin Reinforcement Design and Details –US Customary Units.

Reinforcement bar size	Reinforcement bar and standard hook capacity $f^*A_s^*(f_y)$ kips	Min. inside bend diameter ACI 318-19, Table 25.3.1 in.	l_b ACI 318-19, Table 25.3.1 in.	1 1/2–2 1/2 in. cover (Note 5): 180 degree hook dev. length, l_{dh} ACI 318-19, Section 25.4.3 $l_{dh} = (f_y\psi_e\psi_r\psi_o\psi_c/55\lambda(f_c')^{0.5})(d_b)^{1.5}$ in.	$\frac{l_a}{l_{dh} - l_b}$ in.	1 1/2–2 1/2 in. cover (Note 5): Hairpin capacity See Note 4 Other bars kips	1 1/2–2 1/2 in. cover (Note 5): Hairpin capacity See Note 4 Top bars kips	2 1/2 in. cover and greater (Note 5): 180 degree hook dev. length, l_{dh} ACI 318-19, Section 25.4.3 $l_{dh} = (f_y\psi_e\psi_r\psi_o\psi_c/55\lambda(f_c')^{0.5})(d_b)^{1.5}$ in.	$\frac{l_a}{l_{dh} - l_b}$ in.	2 1/2 in. cover and greater (Note 5): Hairpin capacity See Note 4 Other bars kips	2 1/2 in. cover and greater (Note 5): Hairpin capacity See Note 4 Top bars kips
No. 3	5.9	2.3	4.0	6.0	2.0	6.9	6.9	6.0	2.0	6.9	6.9
No. 4	10.8	3.0	4.5	6.6	2.1	12.7	12.3	6.0	1.5	12.2	11.9
No. 5	16.7	3.8	5.0	9.2	4.2	21.7	20.6	7.4	2.4	19.5	18.9
No. 6	23.8	4.5	6.0	12.1	6.1	33.8	30.3	9.7	3.7	28.9	27.7
No. 7	32.4	5.3	7.0	15.3	8.3	42.0	39.8	12.2	5.2	39.2	37.6
No. 8	42.7	6.0	8.0	18.7	10.7	55.5	52.5	14.9	6.9	53.1	50.7

Source: Adapted and reproduced with permission from PIP, © 2022 University of Texas at Austin.
Note: For this table, $f_c' = 4{,}000$ psi.

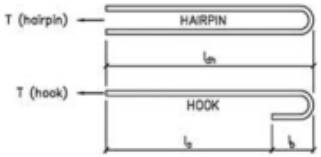

Notes on hairpin capacity:

1. Standard 180-degree hook capacity = rebar capacity;
2. Capacity of l_a portion of hook = rebar capacity × (l_a/l_d) $[l_d > l_a]$;
3. Capacity of l_b portion of hook = rebar capacity − capacity of l_a portion;

(*Continued*)

@seismicisolation

Table 3-5. Standard Hook and Hairpin Reinforcement Design and Details –US Customary Units. (Continued)

4. Hairpin capacity = maximum of bar capacity × $(1 + l_a/l_d)$ and bar capacity × 2 × l_{dh}/l_d, where l_d is the bar development length [$l_d > l_a$] [l_d is given in Table 3-4 for the corresponding cover and location of the rebar (other or top)].
5. ACI 318-19, Section 25.4.3 has changed the way in which the development length (l_{dh}) of standard hooks in tension is calculated from previous versions of ACI 318, as the rebar diameter comes into play in calculating the development length. As a result, one cannot multiply all development lengths by a factor to change the development length for different strengths of concrete. The following table shows l_{dh} for various concrete strengths and bar sizes.

Development lengths of tension hooks (l_{dh}) (in.) for f'_c = 3,000, 4,000, 5,000, and 6,000 psi								
	1 1/2 in. to 2 1/2 in. cover Concrete compressive strength (f'_c) psi				*2 1/2 in. cover and greater Concrete compressive strength (f'_c) psi*			
Reinf bar size	*3,000*	*4,000*	*5,000*	*6,000*	*3,000*	*4,000*	*5,000*	*6,000*
No. 3	6.0	6.0	6.0	6.0	6.0	6.0	6.0	6.0
No. 4	7.0	6.6	6.4	6.2	6.0	6.0	6.0	6.0
No. 5	9.8	9.2	8.9	8.7	7.9	7.4	7.1	7.0
No. 6	12.9	12.1	11.7	11.4	10.3	9.7	9.4	9.1
No. 7	16.3	15.3	14.7	14.4	13.0	12.2	11.8	11.5
No. 8	19.9	18.7	18.0	17.6	15.9	14.9	14.4	14.1

6. Spreadsheet analysis for hairpin capacities for concrete strengths, f'_c, other than 4,000 psi (28 MPa) was performed. It was found that the concrete strength did not make a large difference in the hairpin capacity (normally less than 3% difference throughout the whole range of concrete strengths). Hairpin capacities for f'_c = 3,000 psi (21 MPa) were slightly larger or equal to that for 4,000 psi (28 MPa), and hairpin capacities for f'_c = 5,000 psi (35 MPa) and f'_c = 6,000 psi (42 MPa) were normally equal to or smaller than that of 4,000 psi (28 MPa) concrete. This is not intuitive, but the larger l_{dh}s for lower-strength concrete make l_as larger, and this increases the capacity of the hairpin. To account for this in design, it is suggested that hairpin capacities for No. 4 rebar and larger be reduced by 5% for f'_c = 5,000 psi (35 MPa) and 6,000 psi (42 MPa) concrete. f'_c = 3,000 psi (21 MPa) concrete requires no adjustment, because the capacities are already larger than 4,000 psi (28 MPa) concrete. No. 3 rebar requires no adjustment because l_{dh}s (and, thus, l_as) are the same for all concrete strengths.

@seismicisolation

Table 3-6. Standard Hook and Hairpin Reinforcement Design and Details—Metric (SI) Units.

Reinforcement bar size (mm)	Reinforcement bar and standard hook capacity $f^*A_s^*(f_y)$ kN	Min. inside bend diameter ACI 318M-19 Table 25.3.1 mm	l_b ACI 318M-19 Table 25.3.1 mm	40–65 mm cover (Note 5): 180-degree hook dev. length, l_{dh} ACI 318M-19 Sec 25.4.3 $l_{dh} = (f_y\psi_e\psi_r\psi_o\psi_c/23\lambda(f_c')^{0.5})(d_b)^{1.5}$ mm	40–65 mm cover (Note 5): l_a $l_{dh} - l_b$ mm	40–65 mm cover (Note 5): Hairpin capacity See Note 4: Other bars kN	40–65 mm cover (Note 5): Hairpin capacity See Note 4: Top bars kN	65 mm cover and greater (Note 5): 180-degree hook dev. length, l_{dh} ACI 318M-19 Sec 25.4.3 $l_{dh} = (f_y\psi_e\psi_r\psi_o\psi_c/23\lambda(f_c')^{0.5})(d_b)^{1.5}$ mm	65 mm cover and greater (Note 5): l_a $l_{dh} - l_b$ mm	65 mm cover and greater (Note 5): Hairpin capacity See Note 4: Other bars kN	65 mm cover and greater (Note 5): Hairpin capacity See Note 4: Top bars kN
No. 10	27	57	103	150	47	31	31	150	47	31	31
No. 13	49	76	116	169	53	57	56	150	34	54	53
No. 16	75	95	129	237	108	97	92	190	61	88	85
No. 19	107	115	153	312	159	152	137	250	97	131	125

(Continued)

@seismicisolation

Table 3-6. Standard Hook and Hairpin Reinforcement Design and Details—Metric (SI) Units. (Continued)

Reinforcement bar size (mm)	Reinforcement bar and standard hook capacity $f^*A_s{}^*(f_y)$ kN	Min. inside bend diameter ACI 318M-19 Table 25.3.1 mm	l_b ACI 318M-19 Table 25.3.1 mm	40–65 mm cover (Note 5): 180-degree hook dev. length, l_{dh} ACI 318M-19 Sec 25.4.3 $l_{dh} = (f_y\psi_e\psi_r\psi_o\psi_c/23\lambda(f_c')^{0.5})(d_b)^{1.5}$ mm	40–65 mm cover (Note 5): l_a $l_{dh} - l_b$ mm	40–65 mm cover (Note 5): Hairpin capacity See Note 4: Other bars kN	40–65 mm cover (Note 5): Hairpin capacity See Note 4: Top bars kN	65 mm cover and greater (Note 5): 180-degree hook dev. length, l_{dh} ACI 318M-19 Sec 25.4.3 $l_{dh} = (f_y\psi_e\psi_r\psi_o\psi_c/23\lambda(f_c')^{0.5})(d_b)^{1.5}$ mm	65 mm cover and greater (Note 5): l_a $l_{dh} - l_b$ mm	65 mm cover and greater (Note 5): Hairpin capacity See Note 4: Other bars kN	65 mm cover and greater (Note 5): Hairpin capacity See Note 4: Top bars kN
No. 22	146	133	178	391	213	191	181	313	135	177	170
No. 25	193	152	204	479	275	253	239	383	179	240	229

Source: Adapted and reproduced with permission from PIP, © 2022 University of Texas at Austin.
Note: For this table, $f_c' = 28$ MPa. Hairpin capacity notes in Table 3-5 apply to this table as well.

Reinf bar size (mm)	Development lengths of tension hooks (l_{dh}) (mm) for $f_c' = 21, 28, 35,$ and 42 MPa: 40–65 mm cover, Concrete compressive strength (f_c') MPa: 21	28	35	42	65 mm cover and greater, Concrete compressive strength (f_c') MPa: 21	28	35	42
No. 10	150	150	150	150	150	150	150	150
No. 13	180	169	163	159	150	150	150	150
No. 16	253	237	228	223	202	190	183	179
No. 19	333	312	301	294	266	250	240	235
No. 22	417	391	377	368	333	313	301	295
No. 25	510	479	461	451	408	383	369	361

@seismicisolation

3.6 FRICTIONAL RESISTANCE AND TRANSMITTING OF SHEAR FORCE INTO ANCHORS

3.6.1 General

1. Anchors need not be designed for shear if it can be shown that the factored shear loads are transmitted through frictional resistance developed between the bottom of the base plate and grout at the top of the concrete foundation. If there is a moment on a base plate, the moment may produce a downward load that will develop frictional resistance even if the column or vertical vessel is in uplift, and this downward load can be considered in calculating frictional resistance. Care should be taken to ensure that the downward load that produces frictional resistance occurs simultaneously with the shear load.

2. Shear has traditionally been assumed to be directly transferred from the base plate to the anchors by bearing of the base plate against the anchors if frictional resistance is exceeded and other means of shear transfer are not utilized. This assumption implies that some slippage will occur until the base plate bears against one or more anchors. It is common in the petrochemical and related industries to assume that in a typical four-anchor arrangement, two of the anchors are engaged in transferring the shear and, conservatively, the two anchors with the smaller concrete edge distance in the direction of the shear are engaged. For this assumption to be reasonable, anchor hole diameters in the base plate should be as small as possible to accommodate specified construction tolerance of the anchors and minimize the amount of slippage to no more than approximately 1/4 in. (6 mm). For industrial structures, a slippage of base plates on the order of 1/4 in. (6 mm) is considered acceptable, whereas in a commercial building, that amount of slippage may not be acceptable. The Responsible Engineers should assure themselves that for the structure being designed, this slippage and anchor hole diameter requirement is reasonable.

3. If the assumption of paragraph 2 does not yield sufficient shear capacity to transfer the shear from the base plate through bearing on the anchors, then the anchor diameters, material, or edge distances could be increased to achieve sufficient shear capacity. If it is not practical or economically feasible to increase anchor diameters, material, or edge distances sufficiently, then the use of a shear lug could be considered. Shear lugs are recommended only where a more cost-effective solution is not possible or practical.

   The frictional resistance can be used in combination with shear lugs to resist the factored shear load, but frictional resistance should not be used in combination with the shear resistance of anchors unless a mechanism exists to keep the base plate from slipping before the anchors can resist the load. One mechanism to prevent base plate slippage is to install plate washers between the base plate and the anchor nut. Plate washers with holes

@seismicisolation

1/16 in. (1.5 mm) larger than the anchor rods can be field-welded to the base plate to ensure minimal slip between the base plate and the anchor. Hardened washers should not be used in this application because of the poor weldability of the material. Another option to prevent slippage is to fill the annular spaces between the anchors and the holes with grout.

Note: Field welding is something that is typically avoided due to time, cost and problems associated with field welding of galvanized steel (that is, prep for welding and increased corrosion potential). (Hot-dip galvanizing is by far the most common and effective form of corrosion protection for structural steel and anchors used in the petrochemical industry, unlike the building industry which more typically uses black, primed, or painted steel). Secondly, plate washers can result in larger base plates and anchor spacing to avoid interferences, especially if larger anchor hole diameters are used.

4. Adding a tension load to high-strength anchors (with adequate stretch lengths provided) can increase the frictional resistance (Section 3.8). This load has the effect of increasing the normal factored compression force, P_u, in the equation shown in Section 3.6.2. The use of pretensioning should be limited to high-strength bolts, as the use of pretensioning of mild steel such as ASTM A307-21 (ASTM 2021) and ASTM A36/A36M (ASTM 2019a) is often ineffective (Kulak et al. 1987).

3.6.2 Calculating Resisting Friction Force

The resisting friction force, V_f, may be computed as in Equation (3-8):

$$V_f = \mu P_u \tag{3-8}$$

where P_u is the normal factored compression force, and μ is the coefficient of friction.

ACI 349-13, Section D.6.1.4 gives a μ value of 0.4 between steel base plates and concrete.

The compressive force, P_u, is the factored axial load between the base plate and the pedestal, which acts concurrently with the lateral force, V_{ua}. This axial load is a result of load combinations, calculated in accordance with the governing code load combination equations, owing to dead, live, wind, and seismic loads. If the anchor(s) are tensioned, the design tension load should be included as part of the dead load in the load combinations listed previously. In addition, if there is fixity at the base plate and a moment occurs, the compressive force (between the base plate and the pedestal) resulting from the couple between tension in the anchors and compression on the concrete should also be included in the load combinations. When uplift occurs at the base plate because of wind or seismic loads, this should be combined as a negative force when calculating P_u.

@seismicisolation

3.7 SHEAR LUG DESIGN

3.7.1 General

Normally, frictional resistance and the shear capacity of the anchors used in a foundation adequately resist column base shear forces. In some cases, however, the Responsible Engineer may find the shear force too large and may be required to transfer the excess shear force to the foundation by other means such as shear lugs. If the total factored shear loads are transmitted through shear lugs, the anchors need not be designed for shear, but the eccentricity induced by the couple of the applied shear and the shear lug resultant force should be taken into account when designing the anchor for tension.

A shear lug allows for complete transfer of the shear force, thus removing shear force from the anchors. The only portion of the shear lug that should be considered effective in resisting shear is that which bears against the grout in the grout pocket that is surrounded by concrete; the portion of the lug that bears against the grout that is above the top of the concrete should be disregarded. Although the actual bearing load against the shear lug is probably higher near the top of the concrete and is reduced toward the bottom of the lug, the bearing load is normally assumed to be uniform from the top of the concrete to the bottom of the shear lug. Grout must completely surround the lug plate or section and must entirely fill the slot created in the concrete. When using a rectangular or square hollow structural section or pipe section as a shear lug, a minimum 1 in. (24 mm) hole should be drilled through the base plate into the inside of the rectangular or square hollow structural section or pipe section to allow for grout placement, venting, and inspection to ensure that grout is filling the entire section. 1 in. (24 mm) minimum inspection/vent holes are also required for horizontally installed steel base plates with shear lugs along each of the long sides of the shear lug (ACI 318-19, Section 17.11.1.2 and Figure R17.11.1.1a).

3.7.2 Design Procedure for Plate Shear Lug

The procedure for designing a plate shear lug is as follows:

1. Design a layout for the base plate and shear lugs that complies with all provisions of ACI 318-19, Section 17.11.
2. Calculate the nominal bearing strength of the shear lug, $V_{brg,sl}$ (ACI 318-19, Section 17.11.2).
3. Calculate the concrete breakout strength of the shear lug, $V_{cb,sl}$ (ACI 318-19, Section 17.11.3).
4. Concrete breakout strength of the anchor group in tension, N_{cbg} (ACI 318-19, Section 17.6.2).
5. Check tension and shear interaction (ACI 318-19, Section 17.8).

@seismicisolation

6. Design the shear lug steel according to the *AISC Steel Construction Manual*.
7. Design the shear lug welding according to AWS D1.1/D1.1M (AWS 2020).

Refer to Example 4 in the appendix of this publication for more details on the design.

3.8 TENSIONING

3.8.1 General

The *AISC Steel Construction Manual*, 15th Edition (AISC 2017), Part 14, has the following to say about anchor rod nut installation.

> The majority of anchorage applications in buildings do not require special anchor rod nut installation procedures or pretension in the anchor rod. The anchor rod nuts should be "drawn down tight" as columns and bases are erected, per ANSI/ASSE A10.13 Section 9.6 (ASSE 2011). This condition can be achieved by following the same practices as recommended for snug-tightened installation in steel-to-steel bolted joints in the RCSC Specification. Snug-tight is the condition that exists when all plies in a connection have been pulled into firm contact by the bolts in the joint and all bolts in the joint have been tightened sufficiently to prevent the removal of the nuts without the use of a wrench.
>
> When, in the judgment of the owner's designated representative for design, the performance of the structure will be compromised by excessive elongation of the anchor rods under tensile loads, pretension may be required. Some examples of applications that may require pretension include structures that cantilever from concrete foundations, moment-resisting column bases with significant tensile forces in the anchor rods, or where load reversal might result in the progressive loosening of the nuts on the anchor rods.
>
> When pretensioning of anchor rods is specified, care must be taken in the design of the column base and the embedment of the anchor rod. The shaft of the anchor rod must be free of bond to the encasing concrete so that the rod is free to elongate as it is pretensioned. Also, loss of pretension due to creep in the concrete must be considered. Although the design of pretensioned anchorage devices is beyond the scope of this manual, it should be noted that pretension should not be specified for anchorage devices that have not been properly designed and configured to be pretensioned.

Tensioning is inducing a tension in the anchors by elongating the shaft after the anchors have been placed, the base plate installed, and the concrete and grout have reached their design strength.

@seismicisolation

Tensioning induces preset tensile stresses into the anchors before actual loads are applied. When properly performed, tensioning can reduce deflection of the anchored item, avoid stress reversal, add to frictional resistance, and minimize the vibration amplitude of dynamic machinery. Tensioning should be considered for the following situations:

1. Anchoring vertical vessels (towers) that are sensitive to wind. Sensitivity to wind can be determined using the following method by Freese (1959), which is illustrated in *The Pressure Vessel Design Manual* by Moss (1987).

   Note: The table in Step (c) was developed by converting information from the graph (Moss, Figure 3-9) into the table.

   (a) Calculate the natural period of vibration of the vessel. For cylindrical steel shells, this can be determined by using Equation (3-9):

$$T = 7.65 \times [10]^{-6} \left(\frac{H}{D}\right)^2 \sqrt{wD/t} \tag{3-9}$$

$$T = 2.00 \times [10]^{-6} \left(\frac{H}{D}\right)^2 \sqrt{wD/t} \tag{3-9.SI}$$

   (b) Calculate wD/t, lb/ft (N/m)

   where

   T = Natural period of vibration, s (s),

   H = Height of the vessel, ft (m),

   D = Diameter of the vessel, ft (m),

   w = Weight per unit height, lb/ft (N/m), and

   t = Thickness of the vessel shell, ft (m).

   (c) Determine the critical natural period of vibration using the following table:

wD/t		*Critical natural period of vibration*
lb/ft	*kN/m*	*seconds*
1,000 to 3,000	14.6 to 43.8	0.40 to 0.45
3,000 to 10,000	43.8 to 146	0.45 to 0.50
10,000 to 30,000	146 to 438	0.50 to 0.57
30,000 to 100,000	438 to 1,460	0.57 to 0.64
100,000 to 300,000	1,460 to 4,380	0.64 to 0.70
300,000 to 1,000,000	4,380 to 14,600	0.70 to 0.80
1,000,000 to 3,000,000	14,600 to 43,800	0.80 to 0.90
3,000,000 to 10,000,000	43,800 to 146,000	0.90 to 1.00

@seismicisolation

(d) If the natural period of vibration, T, is greater than the critical natural period of vibration, then the vessel is considered sensitive to wind.

2. To prevent fluctuation of the tensile stress in the anchors and therefore eliminate fatigue concerns.
3. Where load reversal might result in the progressive loosening of the nuts on the anchors.
4. Anchoring dynamic machinery such as compressors (see API Recommended Practice 686/PIP REIE 686 and ACI 351.3R-18) (ACI 2018).

In practical applications, the Responsible Engineer should decide whether to tension the anchor by considering the advantages and disadvantages listed in Sections 3.8.2 and 3.8.3.

3.8.2 Advantages

The advantages of tensioning are as follows:

1. Can prevent stress reversals on anchors susceptible to fatigue weakening or the loosening of the nuts during the reversals.
2. May increase dampening for pulsating or vibrating equipment.
3. Will decrease, to some extent, the drift for tall slender structures and equipment under wind or seismic load.
4. Will increase the downward force and, thus, the frictional resistance for base plates of process towers, other equipment, and structures.

3.8.3 Disadvantages

The disadvantages of tensioning are as follows:

1. Can be costly to install accurately.
2. No recognized code authority gives guidance on the design and installation of tensioned anchors. (Little research has been done in this area.)
3. Long-term load on the anchor is questionable because of the reduction in tension caused by creep of the concrete under the tension load.
4. Prestretch during anchor tensioning reduces the amount of inelastic stretch that may be considered effective for energy dissipation under seismic loads.
5. Typically, there is no bearing resistance to shear on the anchor because, during tensioning, the sleeve around the anchor is not filled with grout.
6. Can be costly to ensure that the anchor will be properly installed and tensioned in the field.
7. Direct damage from tensioning is possible; that is, the tensioning itself can damage the concrete if not properly designed or if the tension load is not properly regulated.

@seismicisolation

8. It is difficult to ensure that there is consistency between the design of the anchor and the design of the vessel anchor chair, that is, to ensure that the vessel anchor chair has been properly designed to carry the anchor tension load.
9. Stress level is difficult to maintain because of concrete shrinkage and creep, and relaxation of the anchor material.
10. Only alloy anchor bolts can be effectively pretensioned. ASTM A307 and ASTM A36/A36M bolts do not hold their pretensioning values and are, thus, ineffective in this regard (Kulak et al. 1987).

3.8.4 Tension Load

ACI 351.3R-18, Section 4.4.2.1 requires that a sufficient clamping force be available to maintain the critical alignment of the machine, stating that

> The clamping force should allow smooth transmission of unbalanced machine forces into the foundation so that the machine and foundation can act as an integrated structure. Generally, higher clamping forces are preferred because high clamping forces result in less vibration being reflected back into the machine. In the presence of unbalanced forces, a machine that has a low clamping force [400 psi (2.8 MPa)] at the machine support points can vibrate more than the same machine with high clamping forces [1,000 psi (7 MPa)]. In the absence of more refined data, designing for a clamping force that is 150% of the anticipated normal operating anchor force is good practice. A minimum anchor clamping force of 15% of the anchor material yield strength is often used if specific values are not provided by the equipment manufacturer. Higher values are appropriate for more aggressive machines.

With regard to anchor preload, ACI 351.3R-18, Section 7.4.3 states

> To avoid slippage under dynamic loads at any interface between the frame and chock and soleplate, or chock and foundation top surface, the normal force at the interface multiplied by the effective coefficient of friction must exceed the maximum horizontal dynamic force applied by the frame at the location of the tie-down.
>
> In general, this requires

$$F_r = \mu(T_{\min} + W_a)$$

or

$$T_{\min} = \frac{F_r}{\mu} - W_a$$

@seismicisolation

where

F_r = Maximum horizontal dynamic force,
μ = Coefficient of friction,
T_{min} = Minimum required anchor tension (clamping load), and
W_a = Equipment weight at anchor location.

An anchor bolt and concrete anchorage system that has long-term tensile strength in excess of T_{min} and maintains preload at or above this tension, coupled with a chock interface whose coefficient of friction equals or exceeds μ, will withstand the force, F_r, to be resisted. A conservative approach neglects W_a (assumes it to be zero) because distortion of the frame or block may reduce the effective force due to weight at any one anchor location.

It is important to establish an appropriate coefficient of friction to be used. ACI 351.3R-18, Section 7.4.3.1 reports on a research program by the Gas Machinery Research Council (GMRC) that states that the "breakaway" friction coefficients include a range of 0.22 to 0.41 for a dry interface between cast iron and various epoxy products. The presence of oil in the sliding interfaces reduces the friction coefficient for cast iron on epoxy to a range of 0.09 to 0.15. Thus, maintaining an oil free interface greatly enhances frictional holding capacity. In an example, ACI 351.3R-18 uses a coefficient of friction of 0.12 and sets the contribution of the compressor weight at zero (ACI 351.3R-18, Section 7.10.5).

3.8.5 Concrete Failure

In certain situations, high-strength anchors embedded in concrete and subjected to high tension forces may cause the ultimate capacity of the concrete to be exceeded by prematurely breaking out the concrete in the typical failure pyramid. Whether this situation can occur depends on the depth of the anchor, edge conditions, the arrangement of the base plate, and other factors. To ensure that premature concrete failure does not occur, tensioned anchors should be designed so that the concrete breakout strength of the anchor in tension is greater than the maximum tension force applied to the anchor. In the case of a stiff base plate covering the concrete failure pyramid, the stresses induced by external uplift on the concrete are offset by the clamping force and the gravity loads. In this case, the concrete breakout strength needs to be designed only for the amount that the external uplift exceeds the gravity load.

3.8.6 Vessel Anchor Chair Failure

Failure of a vessel anchor chair may occur because of failure to design it for the induced tension load of the anchor. This can be avoided by proper communication between the anchor engineer and the chair engineer (Section 3.8.3, Item 8).

3.8.7 Stretching Length

Tensioning should be implemented only when the stretching (spring) length of the anchor extends down to or near the embedded anchor head. On a typical

@seismicisolation

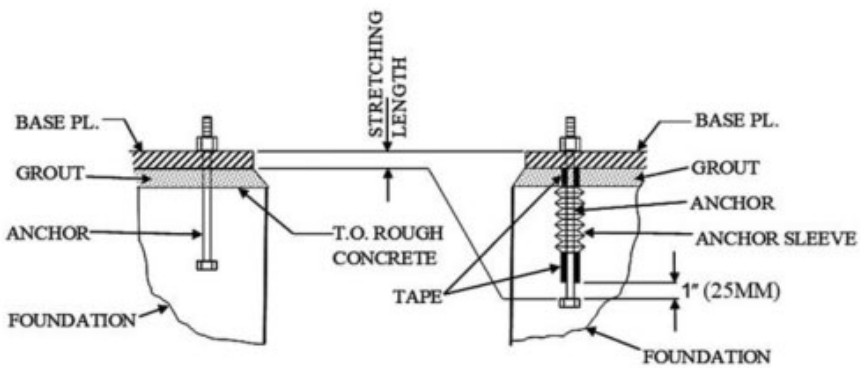

Figure 3-20. Anchor stretching length.

anchor embedment, where there is no provision for a stretching length, if a tensile load is applied to the anchor, the anchor starts shedding its load to the concrete through bond. When this happens, a high bond stress exists in the first few inches of embedment. This bond will relieve itself over time and thereby reduce the load on the anchor. Therefore, it is important to prevent bonding between the anchor and the concrete for tensioned anchors.

Debonding of concrete to the anchor shaft may be achieved by wrapping the shaft with industrial tape to within 1 in. (25 mm) of the embedded anchor head before placing the concrete (Figure 3-20). Care must be taken not to allow the tape to come into contact with the head of the nut. This is the reason for stopping the tape 1 in. (25 mm) from the head. Likewise, grout must not be allowed to bond to the anchor using a similar method. Sleeved anchors that are to be tensioned should be installed using the aforementioned methods for debonding the shaft below the sleeve.

Anchor corrosion may be caused by chloride leaching from PVC pipe sleeves or tape used for debonding purposes in high-temperature applications. This can be avoided by specifying polyethylene or polypropylene sleeves or tape.

The use of chairs that extend above the base plate for anchors also contributes to the available stretching length of the anchors. Chairs can be used on structural columns, process vessels, and other types of equipment.

3.8.8 Tensioning Methods

Methods used to apply preload are as follows:

1. Hydraulic Jacking: Hydraulic jacking is the most accurate method and is recommended if the tension load is essential to the integrity of the design. The anchor design should accommodate any physical clearance and anchor projections required for the hydraulic equipment.
2. Mechanical Jacking: Mechanical jacking is an alternative to hydraulic jacking that is used to achieve the same stretch. Typical mechanical devices called multi-jackbolt tensioners (MJTs) do this by incorporating a ring of

@seismicisolation

Figure 3-21. Multi-Jackbolt tensioner.

Notes: Hydraulic and mechanical tensioners have to translate hydraulic pressure or torque on the small jack screws, respectively, into preload. If more accuracy for measuring the tension in the bolt is required, and hydraulic or mechanical jacking has been specified, a device such as the RotaBolt or the equivalent can be incorporated into the anchor design.

small jack screws in the nut body that bear against a hardened steel washer, thus stretching the anchor as the jack screws are sequentially tightened. See Figure 3-21 for an example of an MJT.

3. Proprietary Alternatives to Hydraulic or Mechanical Jacking: Where accurate preload must be set and maintained throughout the life of the anchored item, as may be the case with some dynamic equipment, proprietary alternatives to hydraulic or mechanical jacking, such as the RotaBolt Load Monitor or the equivalent, should be considered. These alternatives provide a highly accurate way to measure the actual stretch in the anchor and show if the preload is correct or if the load has been reduced because of relaxation or other mechanisms such as thermal relaxation. These devices can be used with hydraulic jacking or mechanical stretching using MJT.
4. Torque Wrench: Because it is the rod stretch rather than the torque on the nut that matters, torque wrench tensioning provides only a rough measure of actual tension load. However, it can be the method of choice if the amount of tension load is not critical. When re-torquing the anchor, the static bond between the nut and the base plate needs to be broken to get a true measurement of the torque within the anchor. Torque values for use with oiled threads are given in API Recommended Practice 686/PIP REIE 686.
5. Turn-of-Nut: This method is a direct measure of the elongation of the anchor, which is used to calculate the tension in the anchor. However, the accuracy of the tension load remains questionable. The tension load from stretching the anchor can be closely determined, but accounting for the compression of

@seismicisolation

the concrete between the base plate and the nut at the bottom of the anchor is difficult. The required amount of nut rotation from the "snug tight" condition, as defined by RCSC (RCSC "Specification for Structural Joints Using High-Strength Bolts," Section 8.1, RCSC 2014), required to produce a desired tensile stress in the anchor, f_t, can be determined using Equation (3-10):

$$\text{Nut rotation (in degrees)} = 360\ L_{stretch} A_{se,N} f_t n_t / (E\ A_d) \tag{3-10}$$

where

L_{stretch} = Anchor stretching length (see note subsequently),

$A_{se,N}$ = Effective cross-sectional area of the anchor in tension,

f_t = Desired tensile stress,

n_t = Threads per unit length (Table 3-7),

E = Elastic modulus of anchor material, and

A_d = Nominal area of anchor.

Table 3-7. Anchor Threads per Inch (n_t).

	Threads per inch (UNC series unless noted otherwise)			
Nominal anchor diameter (in.)	*ASTM F1554 (all grades) standard order*	*ASTM A193/193M standard order, ASTM A354 and ASTM F1554 special order*	*ASTM A307*	*ASTM A354 standard order*
5/8	11	11	11	11
3/4	10	10	10	10
7/8	9	9	9	9
1	8	8UN	8	8
1 1/8	7	8UN	7	7
1 1/4	7	8UN	7	7
1 1/2	6	8UN	6	6
1 3/4	5	8UN	5	5
2	4 1/2	8UN	4 1/2	4 1/2
2 1/4	4 1/2	8UN	4 1/2	4 1/2
2 1/2	4	8UN	4	4
2 3/4	4	8UN	4	4
3	4	8UN	4	4
3 1/4	4	8UN	4	4
3 1/2	4	8UN	4	4
3 3/4	4	8UN	4	4
4	4	8UN	4	4

@seismicisolation

Note: $L_{stretch}$, the anchor stretching length, is the distance between the top and bottom nuts on the anchor if the anchor is debonded from the concrete in that distance. $L_{stretch}$ may be less if it is not debonded along the full distance between the nuts.

If the anchor is to be retightened to compensate for any loss of preload, this method requires that nuts be loosened, brought to a "snug tight" condition, and then turned to the number of degrees originally specified.

3.8.9 Relaxation

Concrete creep and shrinkage also have some effects on the tension load on anchors. The amount of creep and shrinkage depends on mix design, physical characteristics of the aggregate, concrete age when exposed to drying, concrete age when exposed to the tension load, size and shape of the member, amount of steel reinforcement, environmental exposure conditions (such as relative humidity, temperature, and carbon dioxide content of the air), and curing conditions. The following coefficients are rough averages for the maximum creep that can be expected:

$$E_{cr} = 1.0 \times 10^{-6} \text{ in./in./psi } (145 \times 10^{-3} \text{ mm/mm/kPa})$$

$$E_{sh} = 600 \times 10^{-6} \text{ in./in. } (600 \times 10^{-6} \text{ mm/mm})$$

where E_{cr} is the coefficient for creep, and E_{sh} is the coefficient for shrinkage.

As mentioned, the age of the concrete at the time the anchor is tensioned affects the amount of creep and shrinkage; thus, if the anchor is tensioned after the concrete has cured, there will be less creep and shrinkage, which will result in less loss of tension in the anchor. The reductions in expected creep and shrinkage because of age at loading are shown in the *Handbook of Concrete Engineering*, Figures 6-38 and 6-40 (Fintel 1974).

Using these coefficients along with the reductions from the *Handbook of Concrete Engineering*, Figures 6-38 and 6-40 and the following assumptions, Table 3-9 is developed.

Assumptions:

1. Only the average compression load was considered (the high compression over the anchor or nut head was not considered). The area of concrete that was considered for the compression load was arbitrarily taken as 250 in.^{2} (161,000 mm^2).
2. No effect of reinforcing steel was considered.
3. Except for the last case, the anchor length embedded in the concrete was assumed to be 40 in. (1,020 mm) and the overall grip length of the anchor was taken as 54 in. (1,370 mm). For the last case, the anchor length embedded in the concrete was assumed to be 20 in. (510 mm) and the overall grip length was assumed to be 34 in. (860 mm).

The following information can be deduced from Table 3-8:

1. The longer one waits to do the tensioning after the concrete is placed, the smaller the tension loss will be.

@seismicisolation

Table 3-8. Loss in Tension for Various Scenarios.

Tightening scenario	*Anchor diameter and material*	*Tension load*	*Tension after 10 years*	*Loss in tension (%)*
Anchor tightened 28 days after concrete placement	2-in. (50.8 mm) diameter mild steel (ASTM F1554 Gr 36)	50 kips (222.4 kN)	24.55 kips (109.2 kN)	50.9
Anchor tightened 90 days after concrete placement	2-in. (50.8 mm)-diameter mild steel (ASTM F1554 Gr 36)	50 kips (222.4 kN)	30.53 kips (135.8 kN)	38.9
Anchor tightened 90 days after concrete placement	1 3/8-in. (34.9 mm)-diameter high-strength steel (ASTM F1554 Gr 50)	50 kips (222.4 kN)	39.48 kips (175.6 kN)	21.0
Anchor tightened 90 days after concrete placement and then retightened 90 days later	1 3/8-in. (34.9 mm)-diameter high-strength steel (ASTM F1554 Gr 50)	50 kips (222.4 kN)	41.77 kips (185.8 kN)	16.5
Anchor tightened 90 days after concrete placement and then retightened 1 year later	1 3/8-in. (34.9 mm)-diameter high-strength steel (ASTM F1554 Gr 50)	50 kips (222.4 kN)	44.97 kips (200 kN)	10.1
Anchor tightened 90 days after concrete placement and then retightened 1 year later	1 3/8-in. (34.9 mm)-diameter high-strength steel (ASTM F1554 Gr 50) Anchor length reduced by 20 in. (508 mm)	50 kips (222.4 kN)	45.96 kips (204.4 kN)	8.1

@seismicisolation

2. High-strength anchors will reduce the amount of tensioning loss. However, to take advantage of this, one has to reduce the diameter of the anchor for the same tension load, while keeping the bolt lengths the same. This has the effect of increasing the stretch length on the anchor, so that the same reduction in length will result in less tension loss.
3. Retensioning the anchor 90 days after the initial tightening will further reduce the tension loss and retensioning 1 year after the initial tightening will reduce the tension loss even further.
4. Using shorter rather than longer anchors will reduce the amount of tensioning loss.

3.8.10 Tightening Sequence

Anchors should be tightened to the design tension load in three equal stages (Bickford 1995). Tensioning of anchors is to be performed in a crisscross pattern. See Figure 3-22 for a circular anchor pattern sequence.

Refer to API Recommended Practice 686/PIP REIE 686, Part 5, Annex 6, for information on the sequence for tightening and leveling anchors for machinery.

3.8.11 Monitoring Tension

When deemed necessary, the tensioning can be measured by a built-in load monitor such as the "RotaBolt Load Monitor or equivalent. A load monitor gives the owner a means of measuring and correcting any loss of tensioning over time. A good practice is to correct any loss of tension at least annually.

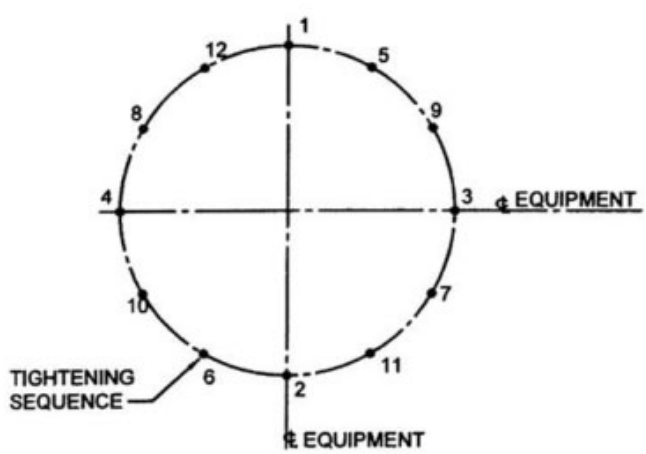

Figure 3-22. Anchor-tightening sequence.

@seismicisolation

3.9 WELDED ANCHORS FOR EMBEDDED PLATES

3.9.1 General

Steel-embedded plates are often used to transfer loads from structural members to concrete structures or foundations. Such plates are often cast-in-place for constructability and to provide a smooth surface for attachment. These plates are attached to the concrete with welded anchors, which typically consist of headed studs, headed anchors, weldable rebar, or shear lugs; they can be designed to resist applied tension, shear, and moment. Welding should be compatible with the anchor type.

Embedded plates may be designed using one type of anchor or a combination of different types. A combination may be desirable when large one-directional moments are encountered. The embedded plate thickness should be designed to carry the tension, compression, shear, and moment to the anchors in a manner similar to that used to design the thickness of a column base plate.

The guidelines for designing welded anchors for embedded plates presented herein are based on ACI 318-19, Chapter 17, and the user should refer to that document for details not included herein. Shear lugs on embedded plates are similar to those discussed in Section 3.7, except without grout, and will not be discussed further.

3.9.2 Headed Stud Anchors

AWS D1.1/D1.1M requires studs to be Type B made from cold drawn bar stock conforming to ASTM A108-18 (ASTM 2018). Because headed studs are relatively short, it is not practical to consider reinforcing steel in design which is more suitable for cases with longer anchors.

3.9.3 Headed Anchor Rods

Headed anchor rods may be used in lieu of headed studs to increase the embedment and assure ductile design, or if studs are not available. Design is similar to that for headed studs. The user must ensure that the anchor rod is made of a weldable material.

If, as in the case of a column pedestal, there is insufficient concrete to resist the tension or shear, reinforcing steel can be designed as anchor reinforcement (Section 3.5). This can be considered a ductile design because both the anchor and the reinforcing steel are ductile.

3.9.4 Rebar Anchors

Welding rebar to the embedded plate is another alternative to headed studs. Rebar welding may require special electrodes or specification of a proper rebar material, such as ASTM A706/A706M (ASTM 2016). Rebar length can be established using l_d or l_{dh} to develop the bar strength if a ductile design is required.

@seismicisolation

Both rebar and headed anchor rods welded to an embedded plate can be cumbersome to handle because the required lengths of rebar and headed anchor rods can be long. If this is undesirable for shipping or coating, a threaded coupler can be welded to the embedded plate and the rebar or anchor rods threaded to match. In this case, the coupler weld would have to be sufficient to transfer the tension and shear loads.

3.9.5 Tension Considerations

The minimum of the following strengths should be taken as the tensile design strength, ϕN_n, of the anchorage.

1. Stud Steel Strength: Type B welded studs are ductile steel elements. φ should be selected in accordance with ACI 318-19.
2. Concrete Breakout Strength: The strength reduction factor, ϕ, should be in accordance with ACI 318-19 for tension.
3. Concrete Side-Face Blowout Strength: The nominal side-face blowout strength, N_{sb} or N_{sbg}, for a single anchor or multiple headed anchors with a deep embedment close to an edge ($c_{a1} < 0.4h_{ef}$) should be checked.
4. Concrete Pull-Out Strength: Concrete pull-out strength should be checked to prevent local crushing of concrete at the head. Such crushing greatly reduces the stiffness of the connection, and usually this happens at the beginning of a pull-out failure.

3.9.6 Shear Considerations

The minimum of the following strengths should be taken as the shear design strength, ϕV_n, of the anchorage.

1. Steel Strength: Steel strength of welded anchors should comply with the design requirements of ACI 318-19, Chapter 17. ACI 318-19, Chapter 17 provides two equations for the calculation of shear strength—Equations (17.7.1.2a) and (17.1.2b). Equation (17.7.1.2a) is for cast-in headed stud anchors. It is based on the fixity of the anchor to the embedment and is appropriate for use in designing anchors welded to embedded plates.
2. Concrete Breakout Strength:

   For shear force perpendicular to an edge, the capacity of the anchor group is allowed to be checked with an edge distance based on the anchor farthest from the edge as stated in ACI 318-19 for anchors welded to a plate.

   For shear force parallel to an edge, the capacity of the anchor group is allowed to be twice the value of the shear capacity calculated perpendicular to an edge.

   For anchors located at a corner, the minimum capacity calculated previously, for parallel and perpendicular loads, should be taken as the design capacity, ϕV_{cbg}.

@seismicisolation

3. Concrete Pryout Strength: Concrete pryout strength should be calculated in accordance with ACI 318-19.

3.9.7 Interaction of Tensile and Shear Forces

Interaction between tensile and shear forces should be in accordance with ACI 318-19.

3.9.8 Seismic Considerations

This section is applicable for Seismic Design Category C, D, E, or F. When anchor design includes seismic forces, the anchor design strength associated with concrete failure modes should be reduced in accordance with ACI 318-19 requirements. The philosophy for the design of steel embedments subject to seismic loads is that the system should have adequate ductility. Anchor strength should be governed by ductile yielding of a steel element. If the anchor cannot meet these ductility requirements (which is the case for most embedded plates with welded studs because of a relatively short embedment depth and close spacing), then either the attachment is designed to yield, or the calculated anchor strength is substantially reduced to minimize the possibility of a brittle failure. Alternatively, longer welded rebar may be used, as opposed to welded studs (Section 3.9.4).

3.9.9 Examples of Design of Welded Anchors for Embedded Plates

Several examples of single and multiple studs welded to embedded plates under tension, shear, moment, and combinations of these loads in ACI 349.2R-07 (ACI 2007) are available. Responsible Engineers are encouraged to use this reference when the need arises.

3.10 CONSIDERATIONS FOR VIBRATORY LOADS

3.10.1 General

Vibratory loads are only a consideration in the design of anchorage in petrochemical facilities if they are high-cycle ones, that is, if they are more than 2×10^6 cycles. Neither ACI 318-19 nor ACI 349-13 addresses the design of anchors for high-cycle fatigue. Fatigue testing of adhesive anchors indicates that fatigue of the bonding materials is not critical.

Fatigue behavior is the most critical for anchor groups having anchors installed through holes in a steel plate or other fixture, because there is significant potential for unequal shear load distribution. Where fatigue because of shear is determined to be important, it is advisable to eliminate movement in the connection via welded thickened washers or supplemental grouting of the annular gap.

@seismicisolation

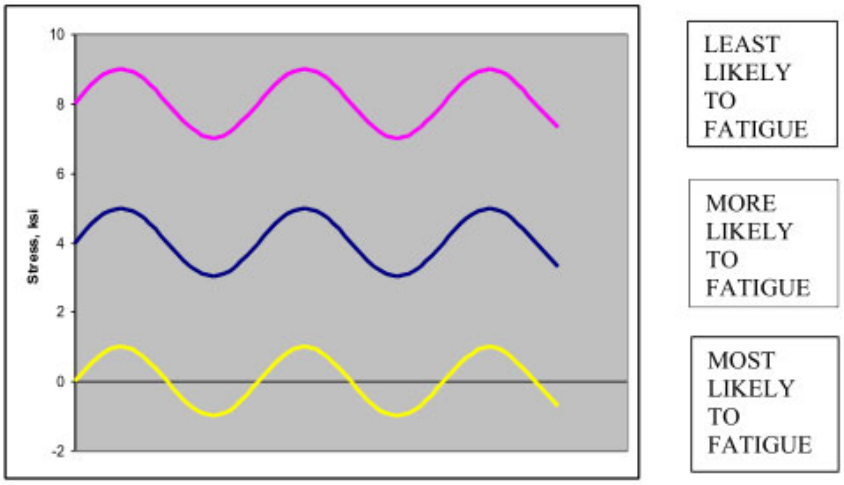

Figure 3-23. Effect of preloading anchors on fatigue.

Fatigue caused by tension loading can be reduced through tensioning of the anchor (Section 3.8). Tensioning requires sufficient anchor length to develop strains that are large compared to the strain associated with concrete relaxation and creep. The residual tension in the anchor should exceed the peak cycling load. The resistance to fatigue is directly related to the ratio between the minimum and the maximum cyclic stress. Figure 3-23 illustrates this point.

The lower curve is for no static preload, the middle curve is for a static preload of 4 ksi (28 MPa), and the upper curve is for a static preload of 8 ksi (55 MPa). The cyclic load amplitude of 2 ksi (14 MPa) is the same in all cases. The ratio of the minimum to the maximum cyclic load for the lower curve is $-1/1 = -1$, the ratio for the middle curve is $3/5 = 0.6$, and the ratio for the upper curve is $7/9 = 0.778$.

For these load cases, the load case illustrated by the upper curve is the least likely to fatigue, the case illustrated by the middle curve is more likely to fatigue, and the case illustrated by the lower curve is the most likely to fatigue, because it has complete load reversal.

3.10.2 Rules for Avoiding Fatigue Failure

Fabrication processes (forming, cutting, welding, heat treatment, and galvanizing) and the thread production method and configuration are critical for the behavior of threaded connections subjected to high-cycle fatigue loading. This is particularly important to eliminate crack initiation, particularly at the first thread inside the nut, where tension fatigue failures typically occur because of the increased stress at this location. Thus, the following rules should be observed to avoid fatigue failure:

@seismicisolation

1. Use the proper grade of nut with the bolt and ensure full thread engagement in the nut.
2. Use rolled threads to avoid stress risers in the threads and shot peening to induce residual compressive stresses in the bolt.
3. Use spherical washers beneath the nut to avoid inducing bending loads in the bolt when it is tensioned because of a lack of parallelism between the bottom of the nut and the bolted parts.
4. Use the fewest possible elastic materials in the joint (gaskets, chocks, etc.) to maintain anchor preload and avoid long-term relaxation.
5. Avoid bending and shear loads on the anchors. Anchors loaded in pure tension are the least likely to fatigue.
6. Use the longest bolt possible to get the greatest strain (stretch) for the applied preload. Bolted joints are held together by the elastic energy stored in the bolt. The amount of energy stored goes up as the square of the stretch length, which, in turn, increases linearly with length. For example, a 4-in. (100 mm) bolt stretched to 70% yield will stretch twice as far as a 2-in. (50 mm) bolt stretched to 70% yield, but the longer bolt contains four times the elastic energy as the shorter one.
7. Put the maximum possible preload on the anchors.

   Note: Many practitioners use 80% to 90% of the yield stress for 40 ksi steel anchors and 50% to 70% of the yield stress for ASTM A193/A193M (ASTM 2020a) Grade B7 steel anchors because of the potential for stress corrosion cracking at higher stresses.

Although maintaining the prestress tension is important, a load monitor such as the RotaBolt Load Monitor or equivalent can provide an easy method to check whether there has been no loss of tension leading to a load reversal.

3.11 CONSIDERATIONS FOR SEISMIC LOADS

3.11.1 General

The flowchart shown in Figure 3-24 provides clarity to the procedure of designing anchorages for earthquake considerations. This flowchart gives a logical procedure for considering the requirements of ACI 318-19, Chapter 17, AISC 341-16 (AISC 2016), and ASCE 7-16 regarding earthquake design.

Although ductile anchorage is recommended for all anchorages, seismic detailing is required by code only for structures assigned to Seismic Design Categories C, D, E, and F, regardless of the governing load combination.

@seismicisolation

Unless otherwise required, anchorages should be designed to resist seismic loads from all load combinations that include nonamplified seismic loads in accordance with the applicable building code. An example where an anchorage should be designed for member strength or amplified loads is a column base connection designed in accordance with AISC 341-16, *Seismic Provisions for Structural Steel Buildings*. Amplified seismic loads are loads resulting from load combinations that include the overstrength factor Ω_o. An example of member strength design is designing a connection for the tensile strength of the brace for a Special Concentrically Braced Frame (SCBF) in accordance with AISC 341-16. When a connection with anchorage is not required to be designed for member strength or amplified seismic loads, the nominal capacities of anchors for structures that have been assigned to Seismic Design Category C, D, E, or F should be subject to the following additional requirements:

1. To reflect the uncertainty associated with anchorage resistance in a concrete structure or foundation that is undergoing inelastic deformations, anchorage design strength capacity in tension and shear associated with concrete failure modes should be taken as $0.75\phi N_n$ and $0.75\phi V_n$, where N_n and V_n are the nominal strengths associated with the controlling concrete failure modes in tension and shear, respectively, as determined in accordance with ACI 318-19, Section 17.10.5.4. If rebar is used to develop anchor forces, it should also be designed in accordance with the aforementioned guideline.
2. To ensure a ductile anchorage, the concrete strength as determined in paragraph (a) (i.e., concrete breakout, pullout, and side-face blowout) should be greater than the strength of the ductile steel embedment element multiplied by 1.2 [ACI 318-19, Section 17.10.5.3(a)(i)].
3. Where ductility in the anchor cannot be achieved, it is acceptable to force ductile yielding in the attachment, for instance in the base plate, by designing the attached component to yield at forces not greater than the design strength of the anchors determined according to ACI 318-19, Section 17.10.5.4. The load transferred from the ductile yield mechanism should include material overstrength and strain-hardening effects for the attachment [ACI 318-19, Section 17.10.5.3(b)].
4. When yielding in the attached component or in the anchor cannot be achieved, it is acceptable to design the anchorage for Ω_0 times the seismic loads transmitted by the attachment [ACI 318-19, Section 17.10.5.3(d)].

@seismicisolation

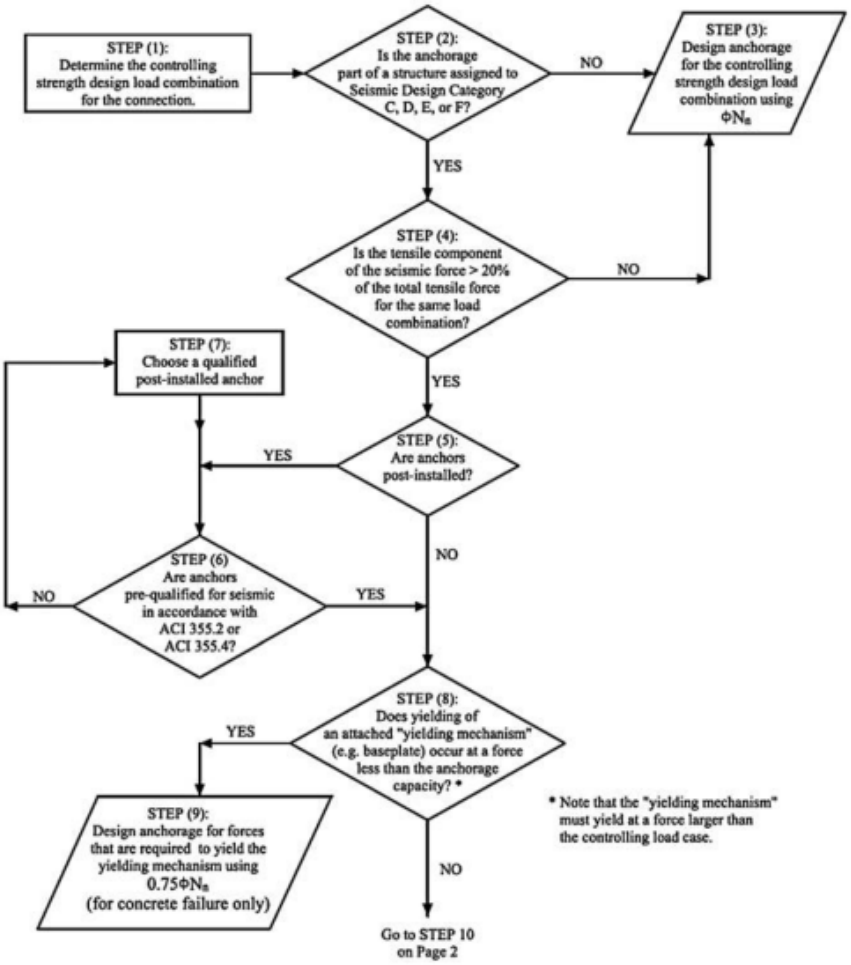

Figure 3-24. T: Flowchart for seismic design of anchorage (tension—Sheet 1 of 2).

Note: ACI 355.4M (ACI 2019e) to be used for metric units.

@seismicisolation

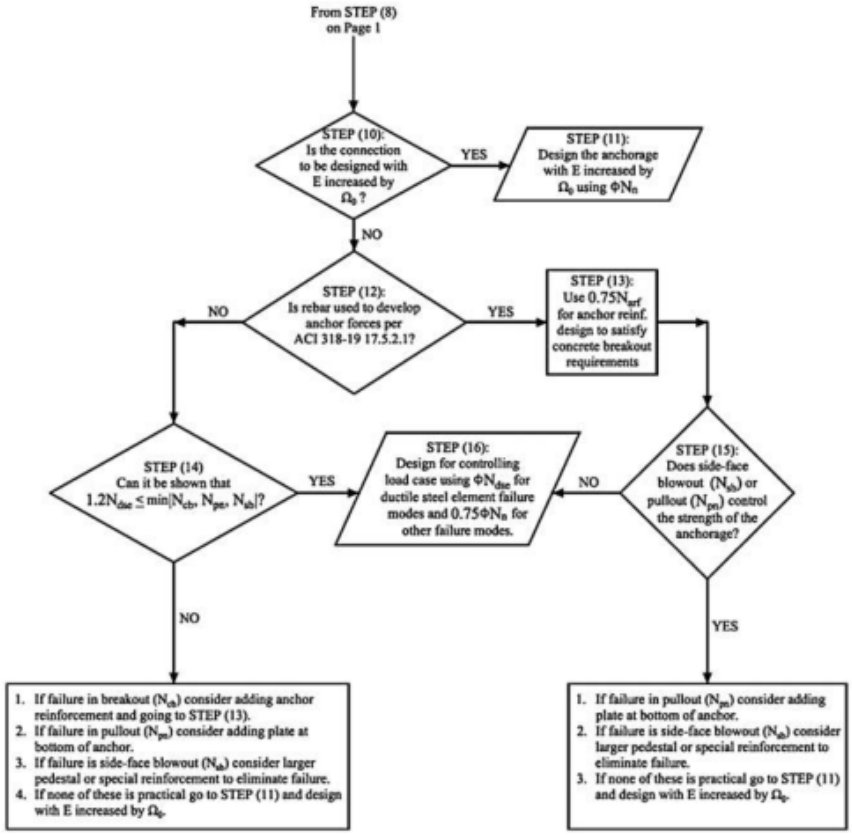

Figure 3-24. (Continued) T: Flowchart for seismic design of anchorage (tension—Sheet 2 of 2).

Notes: ACI 318M to be used for metric units.

1. If anchors are subject to both tension and shear loads acting simultaneously, comply with ACI 318-19, Section 17.6 in the design of the anchors (Steps 3, 9, 11, and 16).
2. The subscript arf stands for anchor reinforcement.
3. The section and paragraph numbers for metric version of ACI 318M-19 are the same as the corresponding US customary versions.
4. Anchorage of tanks and vessels shall follow the provisions of ASCE 7, Section 15.7.5.
5. Nonstructural component anchorage shall follow the provisions of ASCE 7, Section 13.4.

@seismicisolation

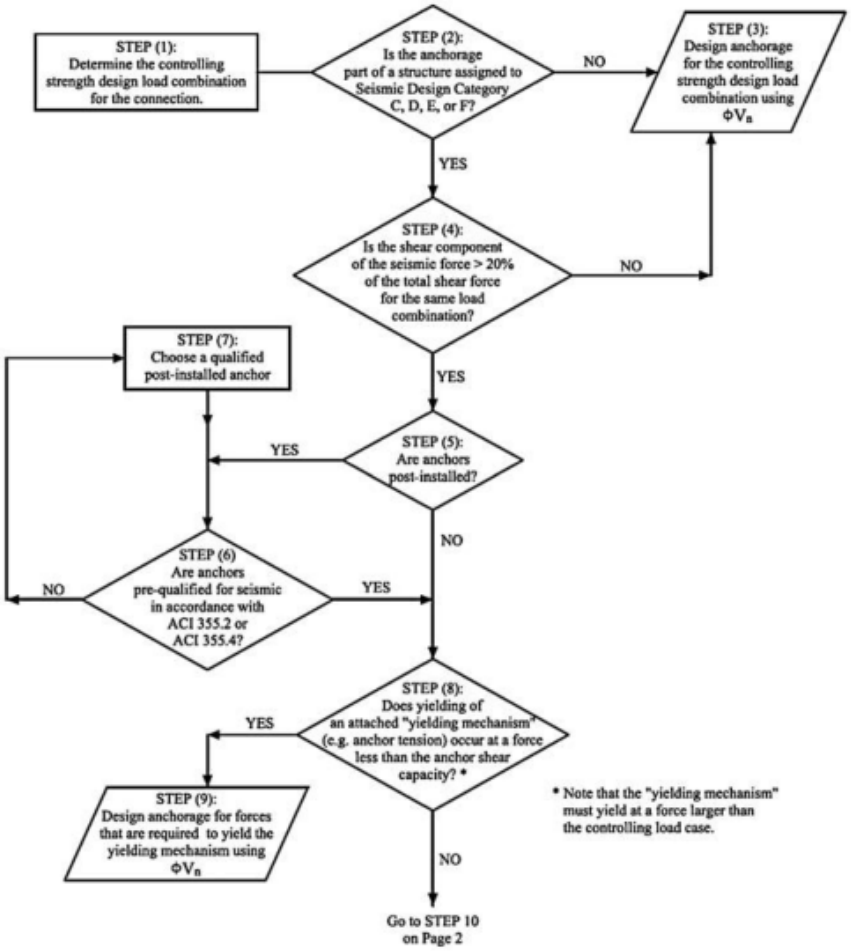

Figure 3-24. (Continued) S: Flowchart for seismic design of anchorage (shear—Sheet 1 of 2).

Note: ACI 355.2M or ACI 355.4M to be used for metric units.

@seismicisolation

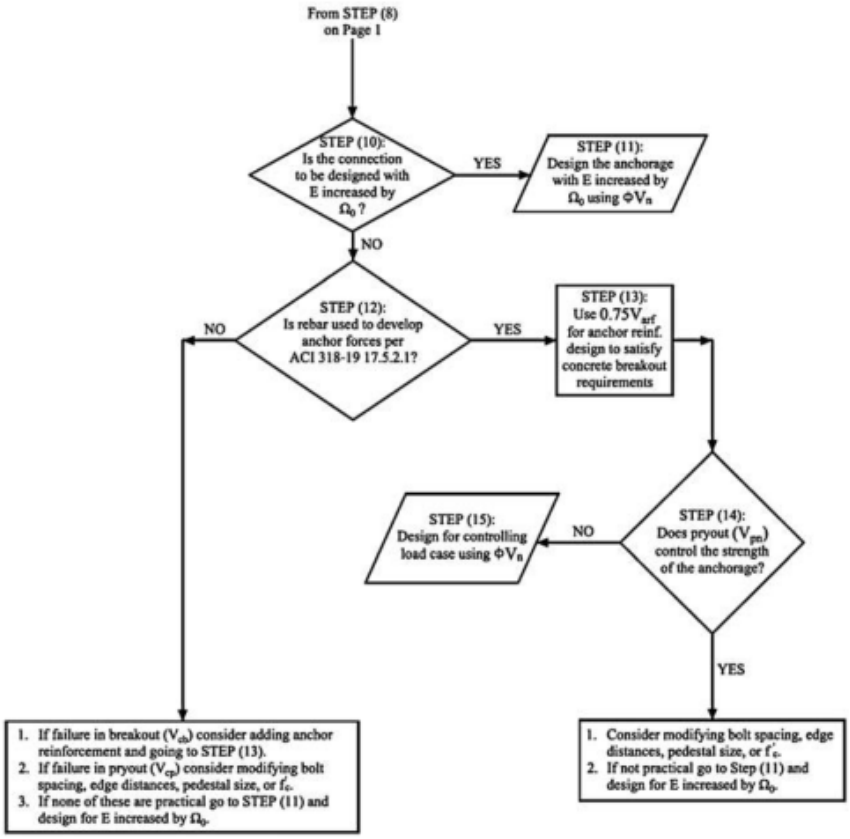

Figure 3-24. (Continued) S: Flowchart for seismic design of anchorage (shear—Sheet 2 of 2).

Notes: ACI 318M to be used for metric units.

1. If anchors are subject to both tension and shear loads acting simultaneously, comply with ACI 318-19, Section 17.6 in the design of the anchors (Steps 3, 9, 11, and 15).
2. The subscript arf stands for anchor reinforcement.
3. The section and paragraph numbers for metric version of ACI 318M-19 are the same as the corresponding US customary versions.
4. Anchorage of tanks and vessels shall follow the provisions of ASCE 7, Section 15.7.5.
5. Nonstructural component anchorage shall follow the provisions of ASCE 7, Section 13.4.

@seismicisolation

3.11.2 Connections Designed in accordance with AISC 341-16

Seismic detailing of structural steel is specified in AISC 341-16. Steel structures assigned to Seismic Design Categories D, E, and F should be detailed in accordance with AISC 341-16 unless covered by exceptions provided in ASCE 7-16, Chapter 15. Steel structures in Seismic Design Categories B and C designed in accordance with ASCE 7-16, Table 12.2-1 Part H, *Steel Systems Not Specifically Detailed for Seismic Resistance, Excluding Cantilever Column Systems*, are exempt from AISC 341-16 detailing requirements, as are all structures in Seismic Design Category A.

Column bases, including the anchorage, of structures conforming to AISC 341-16, are designed in accordance with Chapter 8 of that document. AISC 341-16, Section 8.5a requires that the axial capacity of the column base be taken as the sum of the forces and member capacities of all elements framing into the base. AISC 341-16, Sections 8.5b and 8.5c require column bases to be designed for the column-expected shear strength and column-expected flexural strength, respectively. Typically, the anchorage strength demands determined in accordance with AISC 341-16 (based on member strengths or overstrength factors) will govern the design, as opposed to the strength demands determined in accordance with the nonamplified seismic load combinations of ASCE 7-16. Anchorage for components is typically required to be designed for a higher seismic load than anchorage for items that are not components. This is because of the nature of seismic demands on components during earthquakes. The purpose of the additional requirements for component anchorage is to provide a continuous load path of sufficient strength and stiffness between the component and the supporting structure.

3.11.3 Nonstructural Components

Nonstructural components are subject to special requirements for anchorage that are not specifically addressed in this book. ASCE 7-16, Chapter 13 provides specific anchorage requirements for components and defines detailing and design parameters for components such as piping, conduit, cable tray, and small equipment. With the exception of storage racks, the dividing line between nonstructural components as addressed in ASCE 7-16, Chapter 13, and nonbuilding structures as addressed in ASCE 7-16, Chapter 15 is made on the basis of the weight of the component as a percentage of the overall structure weight.

3.11.4 Pedestal Anchorage

Reinforced concrete pedestals designed to receive loads from supported steel structures, tanks, and vessels are typically required to transfer large, concentrated forces at the anchorage interface, typically at the top of the pedestal. The design of such anchorages is complicated by the reduced edge distances and anchor spacing as well as the need for large tension and shear capacity to accommodate the calculated lateral and overturning forces in the attachment. For typical cases, additional ties, as shown in Figure 3-25, may be adequate to facilitate shear transfer. Special cases may require other solutions such as shear lugs or side plates. As previously discussed, the transfer of tension forces to the vertical

@seismicisolation

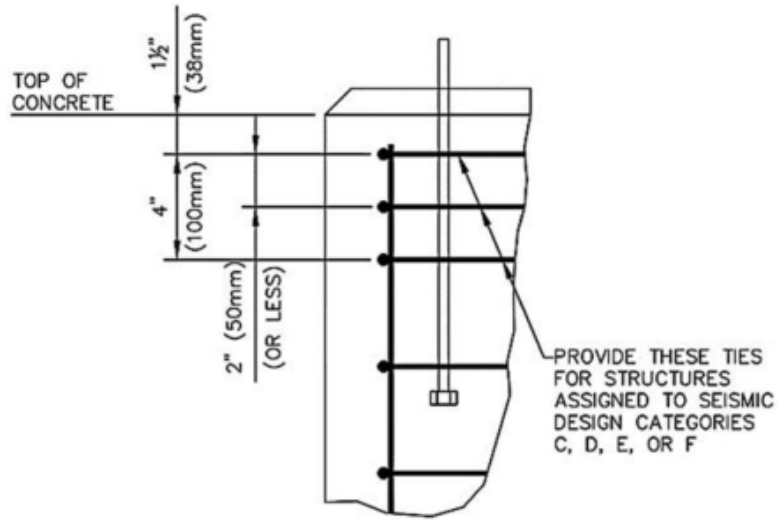

Figure 3-25. Seismic pedestal ties for anchorage.

pedestal reinforcement will likely be governed by the large splitting stresses generated around the anchorage, and as such, a design of the anchor embedment corresponding to development/splice length in accordance with the provisions of ACI 318-19, Chapter 25 should be considered. It is also recommended that additional ties be provided at and directly above the level of the head of headed anchor bolts to take up the bursting forces generated around the anchor head.

As noted previously, anchor reinforcement properly designed in accordance with ACI 318-19, Chapter 17 precludes the need to calculate concrete breakout strength. Proper detailing is critical to ensure load transfer from the anchorage to the reinforcement. This is accomplished by requiring that the anchor reinforcement be developed on both sides of the theoretical crack plane corresponding to concrete breakout. Note that for tension-loaded anchors where splitting of the concrete will likely govern the anchor strength (i.e., anchors in the top of a column or pedestal with limited edge distance), it may be advisable to treat the load transfer from anchor to reinforcement as a noncontact lap splice and to refer to the development length provisions of ACI 318-19, Chapter 25. It is also recommended that those provisions of ACI 318-19 that permit the reduction of development length based on the provision of more than the required reinforcing area $(A_{s,\text{required}})/(A_{s,\text{provided}})$ should not be used when developing anchor reinforcement to resist anchorage-induced seismic loads.

3.11.5 Seismic Design of Vertical Vessel Anchors

Historically, the foundation anchors for tall vertical vessels and stacks have tended to stretch beyond yield when subjected to strong ground motion, which probably prevented a collapse of these vessels. Based on this experience, it is recommended that these anchors be designed with ductile embedment into the foundation

@seismicisolation

(special care should be taken not to significantly oversize the anchors). Oversizing could cause the anchors to not yield during a seismic event, thus increasing the load on the foundation and creating overturning moments in the foundation beyond those assumed in the design.

In specific instances where anchor elongation is required for inelastic displacement of the supported equipment or structure, a minimum stretch length of anchors should be calculated and detailed. These provisions are particularly important for facilities that rely primarily on the foundation and anchors for ductility, such as fixed-base cantilever stacks and skirt-supported vertical vessels. It is industry practice to use a minimum stretch length of 12 anchor diameters in these situations. Some examples of detailing provisions that provide anchor stretch are using extended anchors with high chairs on vessel skirts, providing full-length sleeves filled with elastomeric material, and using industrial tape or grease to break the concrete bond on the anchor shaft.

A procedure for determining the minimum stretch length of vertical vessel anchors is shown in Figure 3-26. To use this procedure, the static displacement at the top of the vertical vessel because of the equivalent lateral

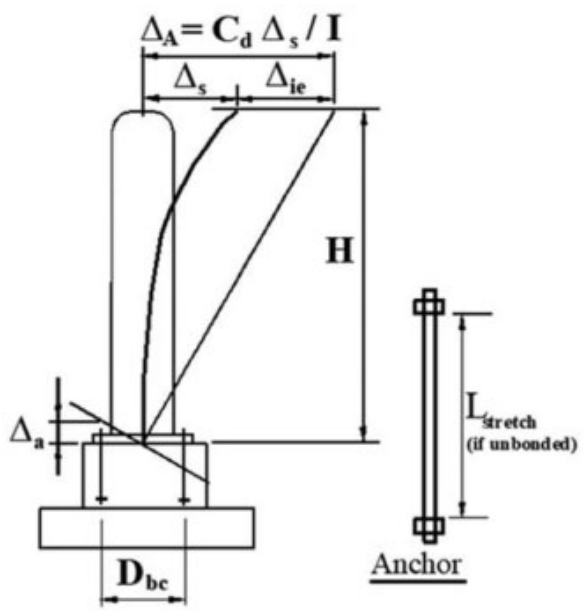

$\Delta_s =$ deflection from elastic analysis

$\Delta_{ie} = \Delta_s [(C_d / I) - 1]$

$\Delta_a = (\Delta_{ie})(D_{bc}) / H = (e_a) L_{stretch}$

$L_{stretch} \geq \Delta_a / e_a$, Where e_a is approx. 5%

Figure 3-26. Determining the minimum stretch length of vertical vessel anchors.

@seismicisolation

force (ELF) procedure seismic loads, Δ_s, should first be calculated. The amplified displacement at the top of the vessel, Δ_A, equals Δ_s plus Δ_{ie}. The inelastic portion of the vessel amplified displacement, Δ_{ie}, is assumed to be caused by anchor bolt stretch because inelasticity should not occur in the vessel or skirt and foundation rocking can lead to instability. The elongation length of the anchor bolts, Δ_a, required to cause the inelastic portion of vessel amplified displacement can be found from the geometry shown in Figure 3-26. The required anchor bolt stretch length, L_{stretch}, can be determined by assuming a reasonable amount of anchor bolt elongation strain, e_a.

When the anchors extend only into the pedestal, the pedestal dowels should be designed to transfer the overturning moment into the footing (minus the resisting moment developed by the pedestal's self-weight). The dowels should be able to develop an overturning moment equivalent to the overturning moment based on anchor strength. If the anchor bolts extend into the footing, which is often the case for very tall vessels, pedestal dowels do not transfer the overturning moment to the footing, and in this case, it is only necessary to provide a nominal number of dowels to minimize concrete cracking.

The anchors should be designed to resist the entire seismic shear load at the base if the overturning moment from the seismic forces, acting alone, cannot develop the required frictional resistance between the vessel base and the top of pedestal. In most cases, this frictional resistance is adequate to resist seismic shear forces; therefore, no shear force is transferred through the anchors.

Equations (3-11) and (3-12) may be used to calculate the frictional resistance (Figure 3-27).

$$P_u^E = M_u^E/LA + 0.9(1/2)D - (1/2)E_v \tag{3-11}$$

$$V_f = \mu P_u^E \tag{3-12}$$

where

M_u^E = Factored overturning moment at the vessel base because of the seismic effect acting alone,

P_u^E = Factored compression force at the top of the pedestal because of the seismic effect acting alone (including the vertical component of the seismic load acting upward),

D = Vertical dead load,

E_v = Vertical component of the seismic load,

LA = Lever arm between the centroid of tension loads on anchors and the centroid of compression load on the pedestal. A conservative approximation of this distance is to use 2/3 of the bolt circle diameter as the lever arm,

μ = Coefficient of friction. ACI 349-13, Section D.6.1.4 gives a μ value of 0.4, and

V_f = Frictional resistance force.

To avoid shear loading on the anchor bolts,

$$V_u \leq \phi V_f \tag{3-13}$$

@seismicisolation

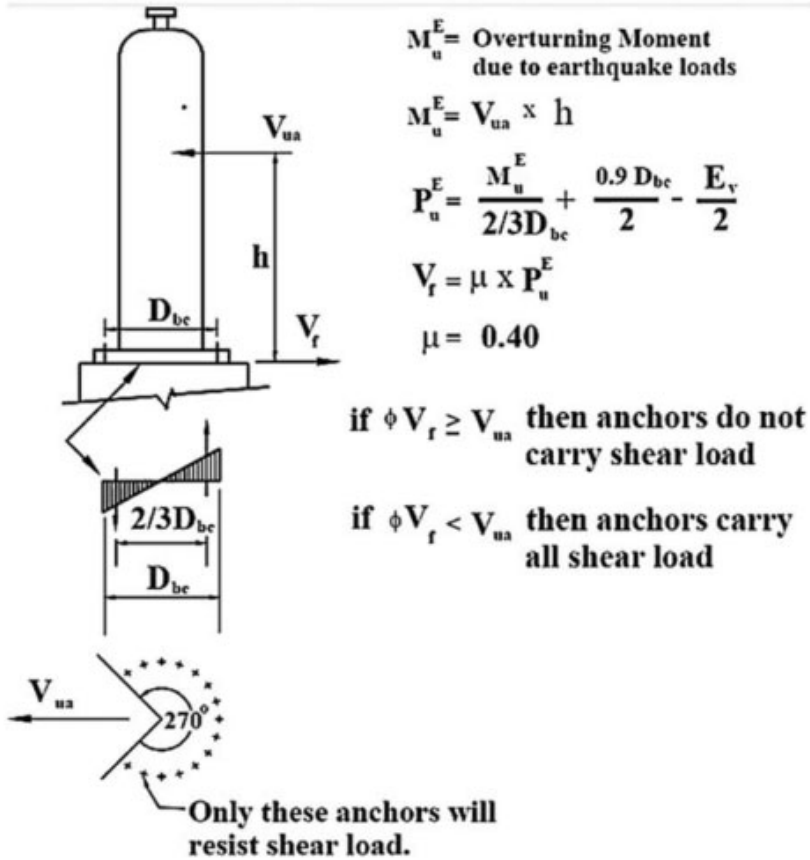

Figure 3-27. Shear transfer methodology for vertical vessel anchors.

where V_u is the factored shear load at the base of the vessel, calculated using load factors in load combinations for uplift cases (see loading combinations and load factors—Strength Design), and ϕ is the strength reduction factor, 0.75 or 0.70 according to ACI 318-19, Table 17.5.3(b).

To minimize the need for excessive bolt edge distance or shear reinforcement when the anchors are designed for seismic shear, the bolts on a 90-degree arc in the direction of the horizontal force are ignored, and the horizontal seismic force is then carried only by the bolts on the remaining 270-degree arc (i.e., three-fourths the total number of bolts) (Figure 3-27). If this force transfer methodology is followed, special detailing will be required to transfer the lateral load from the vessel to the anchors and foundation.

3.11.6 Other Anchorage Seismic Design Considerations

Although double nuts for anchors are sometimes recommended for vibratory equipment or tower vessels, they are not necessary for anchors resisting seismic loads.

@seismicisolation

Anchors with upset threads (Section 2.2.5.3) provide the advantage of ensuring that yielding will occur outside of the threaded portion of the anchor. Upset threads, however, are not necessary for anchors resisting seismic loads.

In regions of frequent high-seismic events, it is recommended that anchors be provided with full-length sleeves (Figure 3-1) or other proprietary canister anchors. The benefits of anchors of this nature are a full-length anchor stretch, and many of the proprietary anchors allow for the rod replacement after a seismic event where the rod has been inelastically stretched or damaged.

3.12 CONSTRUCTABILITY CONSIDERATIONS

The following design practices should be implemented to facilitate constructability, including minimizing the need for future anchor repair or replacement:

1. Specify the use of anchor installation tolerances as given in Table 3-9.
2. If coated anchors (galvanized or other coating) are not used, investigate long-term anchor corrosion issues for uncoated anchors in the design phase to determine whether a corrosion allowance size increase is warranted. In corrosive environments, such oversizing will minimize the need for future anchor repair or replacement (API 620, Section 5.11.2.3) (API 2018). Coated anchors (galvanized or other coating) are preferred.
3. Use the structural base plate hole diameters given in Table 3-10 to minimize the impacts of misalignment. Although the hole diameters listed in this table are not consistent with the current AISC recommendations, they are consistent with industry practice and have been successfully used for years. Larger holes may be used if the annular spaces are grouted or specially designed thickened washers are specified (Fisher and Kloiber 2004).

Table 3-9. Tolerances for Embedments.

Measurement	*Tolerance*
Anchor projection	+ or −1/4 in. (6 mm)
Center of the anchor group	+ or −1/4 in. (6 mm)
Center to center of any two anchors within a group	+ or −1/8 in. (3 mm)
Center to center between anchor groups	+ or −1/4 in. (6 mm)
Anchor plumbness	1/8 in. in 3 ft (4 mm in 1 m)
Plate inserts in columns, walls, and beams horizontal and vertical location	+ or −1/4 in. (6 mm)
Shapes and plate inserts in floor slabs	+ or −1/4 in. (6 mm) horizontal + or −1/16 in. (2 mm) elevation

Source: Adapted and reproduced with permission from PIP, © 2022 University of Texas at Austin.

@seismicisolation

Table 3-10. Recommended Anchor Hole Diameters

US customary uUnits				Metric (SI) units			
	(1)	(2)	(3)		(1)	(2)	(3)
Anchor diameter (in.)	Minimum hole diam. (in.) (±1/8 in.) (Note 1)	Minimum hole diam. (in.) (±3/8 in.) (Note 2)	Maximum hole diam. (in.) (Note 3)	Anchor diameter (mm)	Minimum hole diam. (mm) (±3 mm) (Note 1)	Minimum hole diam. (mm) (±9 mm) (Note 2)	Maximum hole diam. (mm) (Note 3)
5/8	15/16	**1 3/8**	15/16	16	24	**34**	24
3/4	1 1/16	**1 1/2**	1 1/16	20	28	**38**	30
7/8	1 3/16	**1 5/8**	1 5/16	24	32	**42**	36
1	1 5/16	**1 3/4**	1 1/2	30	38	**48**	44
1 1/8	1 7/16	**1 7/8**	1 11/16	36	44	**54**	52
1 1/4	1 9/16	**2**	1 15/16	42	50	60	62
1 1/2	1 13/16	2 1/4	2 5/16	48	56	66	70
1 3/4	2 1/16	2 1/2	2 5/8	56	64	74	82

(*Continued*)

@seismicisolation

Table 3-10. Recommended Anchor Hole Diameters. (Continued)

US customary uUnits				Metric (SI) units			
	(1)	(2)	(3)		(1)	(2)	(3)
Anchor diameter (in.)	Minimum hole diam. (in.) (±1/8 in.) (Note 1)	Minimum hole diam. (in.) (±3/8 in.) (Note 2)	Maximum hole diam. (in.) (Note 3)	Anchor diameter (mm)	Minimum hole diam. (mm) (±3 mm) (Note 1)	Minimum hole diam. (mm) (±9 mm) (Note 2)	Maximum hole diam. (mm) (Note 3)
2	2 5/16	2 3/4	2 15/16	64	72	82	92
2 1/4	2 9/16	3	3 3/16	72	80	90	102
2 1/2	2 13/16	3 1/4	3 9/16	—	—	—	—
3	3 5/16	3 1/2	4 5/16	—	—	—	—

Source: Adapted and reproduced with permission from PIP, © 2022 University of Texas at Austin.

Notes:

1. Hole diameters shown in Column (1) are based on the anchor placement tolerance of ±1/8 in. (±3 mm) between any two anchors within an anchor group (Table 3-9).
2. Hole diameters shown in Column (2) are based on adding the tolerance between anchors in an anchor group (±1/8 in. or ±3 mm) to the tolerance of the center to center spacing between anchor groups (±1/4 in. or ±6 mm) for a total tolerance of ±3/8 in. or ±9 mm between anchors. Note that if this tolerance is required for anchors 1 1/4 in. (36 mm) or smaller (**bold values**), an ASTM A36/A36M–fabricated plate washer will have to be added because the maximum hole diameter is larger than can be accommodated by a standard ASTM F436/F436M or ASTM F844-19 (ASTM 2019c) washer alone.
3. The hole diameters shown in Column (3) are the largest hole diameters that can be accommodated by a standard ASTM F436/F436M or ASTM F844 washer so that the washer will completely cover the hole when the anchor is at the edge of the hole. Hole diameters larger than this will require a fabricated ASTM A36/A36M plate washer in addition to the ASTM F436/F436M or ASTM F844 washer.
4. Recommendations from *AISC Manual of Steel Construction*, 15th ed., Table 14-2, allow larger diameters for the anchor-rod hole diameter. However, these larger-hole diameters require special fabricated washers in addition to the standard ASTM F436/F436M or ASTM F844 washers. Also, there are greater chances of slippage under shear loading on the anchor-rod, which could result in a failure of the anchorage system during wind and seismic events. This committee, PIP, and most companies in the petrochemical industry do not agree that it is necessary to use these larger values. If there is good quality control to ensure the tolerances in Table 3-9 for anchors within an anchor group and between anchor groups, then the maximum hole sizes shown in Column (3) should be adequate.

@seismicisolation

4. Use doubly symmetric anchor layout patterns wherever possible to minimize the potential for orientation layout errors in the field (Fisher and Kloiber 2004).
5. Use conservative anchor projection and thread lengths to minimize the impact of anchors being installed "too short" in the field (Fisher and Kloiber 2004).
6. Minimize the number of setting patterns, anchor lengths, and diameters when designing anchor layouts for column base plates. Although the resulting designs may be conservative in some cases, the detailing and installation process will be simplified, and the potential for confusion and installation errors in the field is minimized (Swiatek et al. 2004).
7. Specify slightly oversized column base plates, thereby allowing room for drilling of oversized holes should anchor misalignment occur in the field (Swiatek et al. 2004).
8. Provide at least 1-in. (25-mm) design clearance between the outside edge of the anchor (or associated bottom plate or washer) and the nearest vertical or tie bar when installing anchors within tied, vertical bar arrangements. Fabrication and installation variances could result in a reinforcement installation that is slightly "tighter" than specified on the design drawings and could result in interference issues with the anchors if not accounted for by providing the 1-in. (25-mm) design clearance.
9. Specify the construction sequence on construction drawings if improper sequencing could impact the anchor installation. For example, early installation of an adjacent wall could hinder the ability to install anchors for a column base plate. Engineering drawings should specify that the column is to be installed prior to the placement of the wall (Swiatek et al. 2004).
10. If practical, design anchors so that they do not extend into the footing but remain in the pedestal. This is highly desirable for construction.
11. Where a dense rebar is located in foundations, clearances for anchors or embedded items should be checked (PIP STE01100) (PIP 2016).
12. If projecting anchors can interfere with construction or maintenance activities, the use of coupled-type anchors should be considered (PIP STE01100).
13. The diameter of anchor holes in base plates should be determined by the Responsible Engineer considering the following:
    (a) Larger holes can be used to accommodate inaccurate placement of anchors in the concrete but may require ASTM A36/A36M plate washers in addition to the ASTM F436/F436M (ASTM 2019b) washers to cover the holes and provide adequate bearing for the nut and ASTM F436/F436M washers. If the anchors are required to resist shear loads, there could be a fairly significant movement of the base plate before the shear load is transferred to the anchors if large holes are used and the ASTM

@seismicisolation

A36/A36M plate washers are not welded to the base plate. Field welding of the plate washers to the base plate is not recommended if the base plate is galvanized.

(b) Smaller holes do not require additional ASTM A36/A36M plate washers and can minimize movement to resist shear loads but will require a more accurate placement of the anchors in the concrete.

(c) Table 3-10 provides the Responsible Engineer with information to determine appropriate anchor hole diameters in base plates and whether ASTM A36/A36M plate washers are required.

Note: For modular construction, the AISC tolerances should be used because of the difficulty in maintaining the tight tolerances required by those given in Table 3-10. If this is done, the special fabricated washers will need to be utilized, and the possibility of slippage in wind and seismic events needs to be considered in the anchorage design.

3.13 ANCHOR PLATES

3.13.1 Background

1. If anchors are required to be ductile, a plate (i.e., anchor plate, see Figure 3-28) may need to be placed at the bottom of the anchor. This is because the pull-out strength of a headed bolt or nut on a threaded rod, N_p, is typically

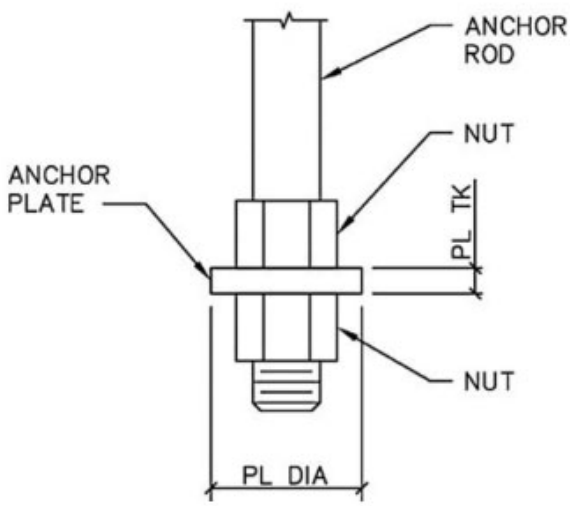

Figure 3-28. Anchor plate.

Source: Adapted and reproduced with permission from PIP, © 2022 University of Texas at Austin.

@seismicisolation

less than 1.2 times the nominal steel strength of the anchor if the concrete is considered as cracked ($\Psi_{c,P} = 1.0$).

2. If the concrete is considered as uncracked ($\Psi_{c,P} = 1.25$), it is highly important to determine that there is no cracking of concrete in the anchor region during the design earthquake. Cracking because of shrinkage or temperature does not need to be considered, but any kind of flexural cracking does need to be considered when the reinforcing steel has fully yielded. ACI 318-19 states, "The anchor design tensile strength should be calculated … assuming the concrete is cracked unless it can be demonstrated that the concrete remains uncracked."
3. ACI 318-19 Commentary Section R17.10.5.4 states, "Because earthquake-resistant design generally assumes that all or portions of the structure are loaded beyond yield, it is likely that the concrete is cracked throughout for the purpose of determining the anchor strength. In locations where it can be demonstrated that the concrete does not crack, uncracked concrete may be assumed for determining the anchor strength as governed by concrete failure modes."
4. Because nearly all anchors to be ductile will need to have an anchor plate provided at the bottom of the anchor, PIP has developed standardized anchors for various anchor rod sizes, steel strengths, and concrete compressive strengths for the purpose of having uniform plate sizes. This committee endorses the use of these standards, which are provided subsequently.

3.13.2 Anchor Plate Standards

1. See Figure 3-28 and Tables 3-11 and 3-12 for guidance regarding standardizing anchor plates. Anchor plates are designed for ASTM F1554 Grade 36, ASTM F1554 Grade 55, ASTM F1554 Grade 105, ASTM A354 Grade BC (ASTM 2017), and ASTM A449 (ASTM 2014) anchors. Two different concrete compressive strengths are used in the design $f_c' = 4{,}000$ psi (28 MPa) and $f_c' = 5{,}000$ psi (35 MPa).
2. Plates are designed for US customary unit system anchors with anchor diameters from 1/2 through 4 in. and for metric unit system anchors with anchor diameters from 16 through 72 mm. The plate material is ASTM A36/A36M minimum.
3. Anchor plates should be round in shape as recommended by this publication.
4. Effective perimeter of the anchor plate should not exceed the value at a section projected outward more than the thickness of the washer or plate from the outer edge of the head of the anchor (ACI 318-19, Section 17.6.2.1.3).
5. For anchor materials not covered by the tables, the ultimate yield strength of the anchor material can be compared with a similar strength anchor material in the tables.

@seismicisolation

Table 3-11. Anchor Plates (US Customary Units).

Anch. Rod Diam.	ASTM F1554 Grade 36 $f_{uta} = 58$ ksi				ASTM F1554 Grade 55 $f_{uta} = 75$ ksi (not ductile over 2 in. diam.)				ASTM F1554 Grade 105 $f_{uta} = 125$ ksi				ASTM A449 $f_{uta} = 120$ ksi (1/2 through 1 in. diam.) $f_{uta} = 105$ ksi (1 1/8 through 1 1/2 in. diam.) $f_{uta} = 90$ ksi (1 3/4 through 3 in. diam.)			
Inch	4,000 psi		5,000 psi		4,000 psi		5,000 psi		4,000 psi		5,000 psi		4,000 psi		5,000 psi	
	PL DIAM.	PL THK.	PL DIAM.	PL THK.	PL DIAM.	PL THK.	PL DIAM.	PL THK.	PL DIAM.	PL THK.	PL DIAM.	PL THK.	PL DIAM.	PL THK.	PL DIAM.	PL THK.
1/2	NR	NR	NR	NR	1	1/4	NR	NR	1 1/4	1/4	1	1/4	1 1/4	1/4	1	1/4
5/8	NR	NR	NR	NR	1 1/4	1/4	NR	NR	1/1/2	3/8	1 1/2	3/8	1 1/2	3/8	1 1/4	1/4
3/4	1 1/2	1/4	NR	NR	1 1/2	1/4	1 1/2	1/4	1 3/4	1/2	1 3/4	1/2	1 3/4	3/8	1 1/2	1/4
7/8	1 3/4	1/4	1 1/2	1/4	1 3/4	1/4	1 3/4	1/4	2	1/2	2	1/2	2	1/2	1 3/4	3/8
1	1 3/4	1/4	1 3/4	1/4	2	1/4	2	1/4	2 1/4	5/8	2 1/4	5/8	2 1/4	1/2	2	3/8
1 1/8	2 1/4	1/4	2 1/4	1/4	2 1/4	3/8	2 1/4	3/8	2 3/4	3/4	2 1/2	5/8	2 1/2	1/2	2 1/4	3/8
1 1/4	2 1/4	3/8	2 1/4	1/4	2 1/2	3/8	2 1/4	3/8	3	7/8	2 3/4	3/4	2 3/4	5/8	2 1/2	1/2
1 3/8	2 1/2	3/8	2 1/2	1/4	2 3/4	1/2	2 1/2	3/8	3 1/4	7/8	3	7/8	3	5/8	2 3/4	1/2
1 1/2	2 3/4	3/8	2 3/4	1/4	3	1/2	2 3/4	3/8	3 1/2	1	3 1/4	7/8	3 1/4	3/4	3	5/8
1 3/4	3 1/4	3/8	3 1/4	3/8	3 1/2	5/8	3 1/4	1/2	4	1 1/8	3 3/4	1	3 1/2	3/4	3 1/4	5/8
2	3 1/2	1/2	3 1/2	3/8	4	5/8	3 1/2	1/2	4 3/4	1 3/8	4 1/4	1 1/4	4	3/4	3 3/4	5/8
2 1/4	4	1/2	4	3/8	—	—	—	—	5 1/4	1 5/8	4 3/4	1 3/8	4 1/2	7/8	4 1/4	3/4
2 1/2	4 1/2	1/2	4 1/2	1/2	—	—	—	—	5 3/4	1 3/4	5 1/4	1 1/2	5	7/8	4 1/2	3/4
2 3/4	5	5/8	5	5/8	—	—	—	—	6 1/2	2	6	1 7/8	5 1/2	1	5	3/4
3	5 1/2	3/4	5 1/4	5/8	—	—	—	—	7	2 1/4	6 1/2	2	6	1 1/8	5 1/2	7/8
4	7 1/4	7/8	7	3/4	—	—	—	—	—	—	—	—	—	—	—	—

Source: Adapted and reproduced with permission from PIP, © 2022 University of Texas at Austin.

Notes: All dimensions are in inches. NR = plate not required for ductility. 4-in.-diameter ASTM A449 anchors are not manufactured. ASTM F1554 Grade 55 anchors of more than 2 in. in diameter are not ductile and should not be used where ductility is required. See Figure 3-28 for nomenclature.

@seismicisolation

Table 3-12. Anchor Plates [Metric (SI) Units].

Anch Rod Diam.	ASTM F1554 Grade 36 f_{uta} = 400 MPa				ASTM F1554 Grade 55 f_{uta} = 520 MPa (not ductile over 50 mm diam.)				ASTM F1554 Grade105 f_{uta} = 862 MPa.				ASTM A449 f_{uta} = 830 MPa (12–25 mm diam.) f_{uta} = 720 MPa (25.1–38 mm diam.) f_{uta} = 620 MPa (38.1–76 mm diam.)			
mm	28 MPa		35 MPa		28 MPa		35 MPa		28 MPa		35 MPa		28 MPa		35 MPa	
	PL DIAM.	PL THK.	PL DIAM.	PL THK.	PL DIAM.	PL THK.	PL DIAM.	PL THK.	PL DIAM.	PL THK.	PL DIAM.	Pl THK.	PL DIAM.	PL THK.	PL DIAM.	PL THK.
16	NR	NR	NR	NR	35	5	NR	NR	40	10	35	10	35	10	35	10
20	NR	NR	NR	NR	45	10	NR	NR	45	10	45	10	45	10	45	10
24	NR	NR	NR	NR	50	10	NR	NR	55	15	50	10	55	10	50	10
30	60	10	NR	NR	60	10	60	10	70	20	65	15	65	15	60	10
36	70	10	NR	NR	75	10	75	10	85	20	75	15	75	15	75	15
42	85	10	NR	NR	85	10	85	10	95	25	90	20	85	15	85	15
48	100	15	NR	NR	100	15	100	15	110	30	100	25	100	15	100	15
56	110	15	110	15	—	—	—	—	130	40	120	35	110	20	110	20
64	120	15	120	15	—	—	—	—	150	45	135	40	125	25	120	20
72	135	20	135	20	—	—	—	—	170	60	155	50	145	30	135	25

Source: Adapted and reproduced with permission from PIP, © 2022 University of Texas at Austin.
Notes: All dimensions are in mm. NR = plate not required for ductility. ASTM F1554 Grade 55 anchors over 50 mm in diameter are not ductile and should not be used where ductility is required. See Figure 3-28 for nomenclature.

@seismicisolation

References

ACI (American Concrete Institute). 2002. *Building code requirements for structural concrete and commentary*. ACI 318-02. Farmington Hills, MI: ACI.

ACI. 2006. *Code requirements for nuclear safety-related concrete structures and commentary*, ACI 349-06. Farmington Hills, MI: ACI.

ACI. 2007. *Guide to the concrete capacity design (CCD) method—Embedment design examples*, ACI 349.2R-07. Farmington Hills, MI: ACI.

ACI. 2008. *Building code requirements for structural concrete and commentary*, ACI 318-08. Farmington Hills, MI: ACI.

ACI. 2011. *Guide for design of anchorage to concrete: Examples using ACI 318 Appendix D*, ACI 355.3R-11. Farmington Hills, MI: ACI.

ACI. 2013. *Code requirements for nuclear safety-related concrete structures and commentary*, ACI 349-13 (R2014). Farmington Hills, MI: ACI.

ACI. 2014. *Building code requirements for structural concrete and commentary*, ACI 318-14. Farmington Hills, MI: ACI.

ACI. 2018. *Report on foundations for dynamic equipment*, ACI 351.3R-18. Farmington Hills, MI: ACI.

ACI. 2019a. *Building code requirements for structural concrete and commentary*, ACI 318-19. Farmington Hills, MI: ACI.

ACI. 2019b. *Building code requirements for structural concrete and commentary (metric)*, ACI 318M-19. Farmington Hills, MI: ACI.

ACI. 2019c. *Qualification of post-installed mechanical anchors in concrete and commentary*, ACI 355.2-19. Farmington Hills, MI: ACI.

ACI. 2019d. *Qualification of post-installed adhesive anchors in concrete and commentary*, ACI 355.4-19. Farmington Hills, MI: ACI.

ACI. 2019e. *Qualification of post-installed adhesive anchors in concrete and commentary*, ACI 355.4M-19. Farmington Hills, MI: ACI.

AISC (American Institute of Steel Construction). 2016. *Seismic provisions for structural steel buildings*, AISC 341-16. Chicago: AISC.

AISC. 2017. *AISC steel construction manual*. 15th ed. Chicago: AISC.

API (American Petroleum Institute). 2009. *Recommended practice for machinery installation and installation design*. 2nd ed., API Recommended Practice 686/PIP REIE 686. Washington, DC: API; Austin, TX: Process Industry Practices (Joint Publication).

API. 2018. *Design and construction of large, welded, low-pressure storage tanks*. 12th ed., API 620, plus addendum 1, 2014, and addendum 2, 2018. Washington, DC: API.

ASCE. 2017. *Minimum design loads and associated criteria for buildings and other structures*, ASCE/SEI 7-16. Reston, VA: ASCE.

ASTM International. 2014. *Standard specification for hex cap screws, bolts and studs, steel, heat treated, 120/105/90 ksi minimum tensile strength, general use*, ASTM A449-14 (R2020). West Conshohocken, PA: ASTM.

ASTM. 2016. *Standard specification for deformed and plain low-alloy steel bars for concrete reinforcement*, ASTM A706/A706M-16. West Conshohocken, PA: ASTM.

ASTM. 2017. *Standard specification for quenched and tempered alloy steel bolts, studs, and other externally threaded fasteners*, ASTM A354-17. West Conshohocken, PA: ASTM.

ASTM. 2018. *Standard specification for steel bar, carbon and alloy, cold-finished*, ASTM A108-18. West Conshohocken, PA: ASTM.

ASTM. 2019a. *Standard specification for carbon structural steel*, ASTM A36/A36M-19. West Conshohocken, PA: ASTM.

@seismicisolation

ASTM 2019b. *Standard specification for hardened steel washers inch and metric dimensions*, ASTM F436/F436M-19. West Conshohocken, PA: ASTM.

ASTM. 2019c. *Standard specification for washers, steel, plain (flat), unhardened for general use*, ASTM F844-19. West Conshohocken, PA: ASTM.

ASTM. 2020a. *Standard specification for alloy-steel and stainless steel bolting for high temperature or high pressure service and other special purpose applications*, ASTM A193/A193M-20. West Conshohocken, PA: ASTM.

ASTM. 2020b. *Standard specification for anchor bolts, steel, 36, 55, and 105-ksi yield strength*, ASTM F1554-20. West Conshohocken, PA: ASTM.

ASTM. 2021. *Standard specification for carbon steel bolts, studs, and threaded rod 60,000 psi tensile strength*, ASTM A307-21. West Conshohocken, PA: ASTM.

AWS (American Welding Society). 2020. *Structural welding code*, AWS D1.1/D1.1M:2020. New York: AWS.

Bickford, J. H. 1995. Vol. 97 of *An introduction to the design and behavior of bolted joints*. 3rd ed. Tampa, FL: Taylor & Francis.

Cannon, R. W., E. G. Burdette, and R. R. Funk. 1975. *Anchorage to concrete*. Rep. No. CEB 75-32. Chattanooga, TN: Tennessee Valley Authority.

Cannon, R. W., D. A. Godfrey, and F. L. Moreadith. 1981. *Guide to the design of anchor bolts and other steel embedments*. Farmington Hills, MI: ACI.

CEN (European Committee for Standardization). 2018. *Design of concrete structures—Part 4. Design of fastenings for use in concrete*. Eurocode 2—EN 1992-4:2018. Brussels, Belgium: CEN.

Comite Euro-International Du Beton. 1997. *Design of fastenings in concrete: Design guide*. London: Thomas Telford.

DeVries, R. A., J. O. Jirsa, and T. Bashandy. 1998. "Effects of transverse reinforcement and bonded length on the side-blowout capacity of headed reinforcement." In *Bond and development length of reinforcement: A tribute to Peter Gergely*, Special Publications 180, edited by R. Leon. Farmington Hills, MI: ACI.

Elfgren, L., C. E. Broms, K. Cederwall, and K. Gylltoft. 1982. "Fatigue of anchor bolts in reinforced concrete foundations." In Vol. 37 of *Proc., Int. Association for Bridges and Structural Engineering, Fatigue of Steel and Concrete Structures, Zurich*, 463–470.

Eligehausen, R., R. Mallee, and J. F. Silva. 2006. *Anchorage in concrete construction*. Berlin: Ernst & Sohn.

Fabbrocino, G., G. M. Verderame, and G. Manfredi. 2005. "Experimental behavior of anchored smooth rebars in old type reinforced concrete buildings." *Eng. Struct.* 27 (10): 1575–1585.

Fintel, M. 1974. *Handbook of concrete engineering*. New York: Van Nostrand Reinhold.

Fisher, J. M., and L. A. Kloiber. 2004. *An ounce of prevention*. Modern Steel Construction. Chicago: AISC.

Freese, C. E. 1959. "Vibration of vertical pressure vessels." *J. Eng. Ind.* 81 (1): 77–91.

Fuchs, W., R. Eligehausen, and J. Breen. 1995. "Concrete capacity design (CCD) approach for fastening to concrete." *ACI Struct. J.* 92 (1): 73–93.

Furche, J., and R. Eligehausen. 1991. "Lateral blow-out failure of headed studs near a free edge." In *Anchors in concrete—Design and behavior*, Special Publication 130, edited by G. A. Senkiw and H. B. Lancelot, 235–252. Farmington Hills, MI: ACI.

Ghali, A. and S. A. Youakim. 2005. "Headed studs in concrete: State of the art." *ACI Struct. J.* 102 (5): 657–667.

Hofmann, J., and R. Eligehausen. 2002. "Local blowout failure with headed anchors close to an edge." [In German.] In Paper presented at the meeting of *FIB Special Activity Group*. Stuttgart, Germany: Institut fur Werkstoffe im Bauwesen, Universiat Stuttgart.

@seismicisolation

ICC (International Code Council). 2021. *International building code*. Washington, DC: ICC.

Klingner, R. E., and J. A. Mendonca. 1982. "Tensile capacity of short anchor bolts and welded studs: A literature review." *ACI Struct. J.* 79 (4): 270–279.

Kulak, G. L., J. W. Fisher, and J. H. A. Struik. 1987. *Guide to design criteria for bolted and riveted joints*. 2nd ed. Chicago: AISC.

Lee, D. W., and J. E. Breen. 1966. *Factors affecting anchor bolt development*. Research Rep. 88-1F, Project 3-5-65-88. Austin, TX: University of Texas.

Lee, N. H., K. S. Kim, C. J. Bang, and K. R. Park. 2007. "Tensile-headed anchors with large diameter and deep embedment in concrete." *ACI Struct. J.* 104 (4): 479–486.

Leonhardt, F., and R. Walther. 1965. Vol. 4 of *Welded wire mesh as stirrup reinforcements—Shear tests on T-beams and anchorage tests*. [In German.] Essen, Germany: Bautechnik.

Moss, D. R. 1987. *Pressure vessel design manual*. Houston, TX: Gulf Publishing.

PIP (Process Industry Practices). 2016. *Constructability design guide*, PIP STE01100. Austin, TX: PIP.

PIP. 2018. *Application of ASCE anchorage design for petrochemical facilities*, PIP STE05121. Austin, TX: PIP.

RCSC (Research Council on Structural Connections). 2014. *Specification for structural joints using high-strength bolts*. Chicago: AISC.

Swiatek, D., E. Whitbeck, and V. Shneur. 2004. *Anchor rods—Can't live with 'em, can't live without 'em*. Modern Steel Construction. Chicago: AISC.

Thompson, M. K., A. Ledesma, J. O. Jirsa, and J. E. Breen. 2006. "Lap splices anchored by headed bars." *ACI Struct. J.* 103 (2): 271–279.

@seismicisolation

CHAPTER 4
Post-Installed Anchor Design

4.1 INTRODUCTION

The term *post-installed anchor* is used to describe devices installed in holes drilled in hardened concrete for the purpose of transferring loads into the concrete. Post-installed anchor types include expansion anchors, undercut anchors, screw anchors, as well as grouted and bonded (adhesive) anchors.

The use of post-installed anchors in petrochemical and other industrial facilities ranges from pipe support to vessel anchorage. Design considerations associated with anchoring trapeze hangers, emergency lighting, and guardrails are quite different from those associated with large-scale foundation anchors. Inasmuch as the full range of anchoring challenges is typically present in a petrochemical or an industrial facility, an understanding of the functional characteristics of the various post-installed anchor types is provided here.

Classification of post-installed anchor types is typically based on the mechanism of action for transfer of tension loads and the manner of setting the anchor. Figure 4.1 outlines common types for post-installed anchors.

4.2 POST-INSTALLED MECHANICAL ANCHORS

4.2.1 Expansion Anchors

Expansion anchors transfer tension loads to concrete primarily via friction between the expansion elements of the anchor and the wall of the hole. The magnitude of the friction resistance is directly proportional to the degree of expansion force developed by the anchor. Expansion forces are produced in response to the relative movement of sloping surfaces within the anchor mechanism. The manner in which this relative movement is produced is important for distinguishing the anchor function in response to tension loads. The two most common mechanisms for producing expansion forces are represented by displacement-controlled and torque-controlled anchors: (1) Drop-in anchors are the most common representative of displacement-controlled anchors. They are set by driving a

@seismicisolation

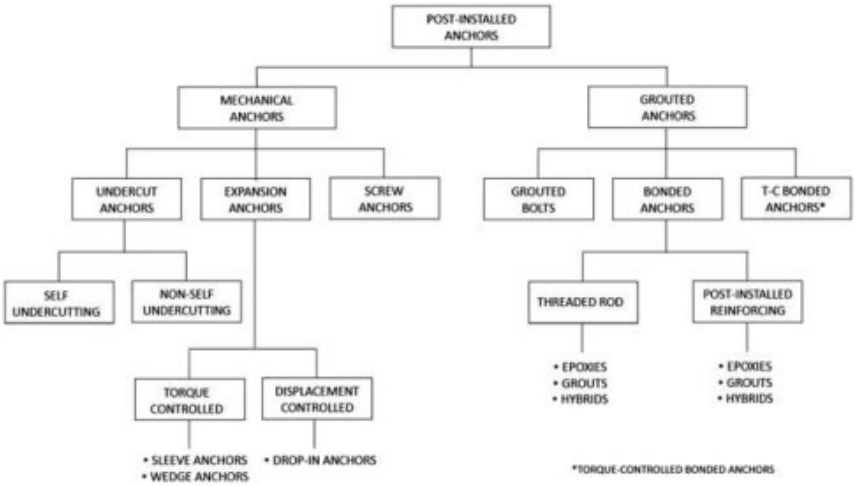

Figure 4-1. Post-installed anchor types.

conical plug into the body of the anchor (Figure 4-2a). The interior of the anchor body is sloped, and slits in the anchor body permit outward expansion of the shell against the hole wall in response to the position of the plug within the anchor body. A full set of the anchor is determined by the relative position of the top of the plug with respect to the upper lip of the anchor shell. The level of expansion force developed by the anchor, and, thus, its ability to resist external tension loads, is at a maximum immediately after setting and decreases thereafter as a function of creep, relaxation, and changes in hole diameter associated with the cracks in concrete. (2) Torque-controlled expansion anchors, which include wedge anchors and sleeve type anchors, are set by the application of torque to the anchor, resulting in a vertical movement of a conical element and outward expansion of the sleeve element(s) surrounding the cone (Figure 4-2b). Critical to the function of these anchors is the relationship between the friction developed at the hole wall and the friction between the inclined surfaces of the anchor (internal friction). This relationship, which is a function of anchor geometry, surface treatments, and drilled hole diameter, determines the robustness of anchor follow-up expansion in response to applied external tension loads that exceed the preload in the anchor and to changes in hole geometry associated with concrete cracking. In this respect, the behavior of torque-controlled expansion anchors under load is typically superior to that of displacement-controlled expansion anchors.

Note: Re-expansion of the anchor in response to external tension loads is called follow-up expansion.

4.2.2 Undercut Anchors

In theory, undercut anchors transfer tension loads to concrete via bearing rather than friction and as such offer a generally more reliable mechanism for resisting

@seismicisolation

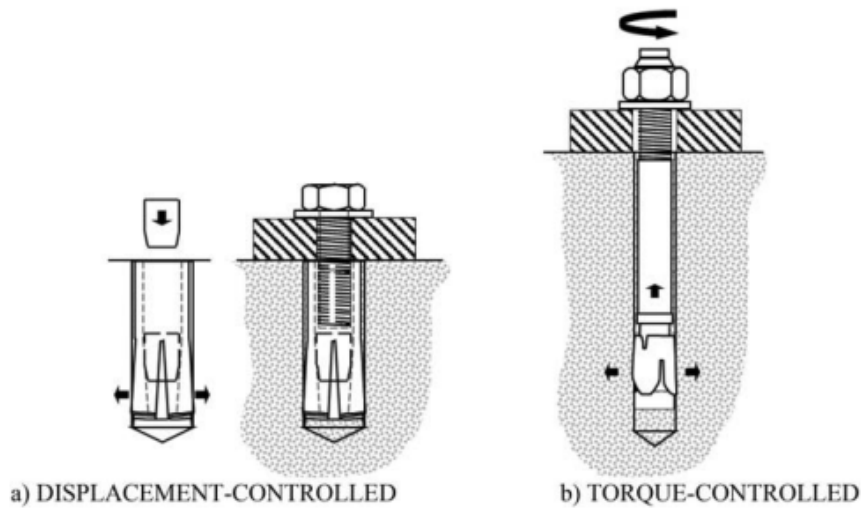

Figure 4-2. Expansion anchor types: (a) displacement-controlled, (b) torque-controlled.

applied loads. This is achieved by producing a hole geometry (i.e., an undercut) that permits the anchor to key into the concrete.

If designed and installed properly, undercut anchors represent a superior class of post-installed mechanical anchors. By relying on bearing to transfer tension loads, they offer several advantages over expansion anchors: (1) They do not require large expansion forces to set properly. This, in turn, allows them to be set closer to free edges or to other anchors without precipitating splitting failures. (2) They are much more tolerant of variations in concrete, such as cracking or other localized defects.

Nevertheless, the term *undercut anchor* is undefined for the purposes of establishing anchor design characteristics (e.g., according to the ACI 355.2 standard) (ACI 2019e). That is, a product may be labeled as an undercut anchor absent confirmation of a bearing mechanism or minimum bearing area. In questionable cases, it may be advisable to request verification of anchor-bearing characteristics from the manufacturer.

Many undercut anchors employ a specialized undercutting tool to create the bearing surface in a previously drilled hole. These systems can produce robust anchorages at a variety of embedment depths. They are particularly suited to retrofit applications, where flexibility in embedment depth (e.g., to avoid reinforcing) is required. However, they can be costly and difficult to install because of the complexity of the undercutting tools and the time required to prepare the undercut and set the anchors properly.

Self-undercutting undercut anchors are installed in predrilled holes with a rotary hammer drill. They produce the undercut in the process of installing the anchor via cutting elements activated through a combination of drilling and

@seismicisolation

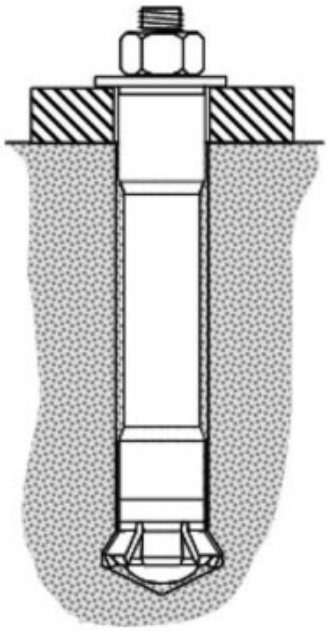

Figure 4-3. Undercut anchor.

hammering action. Self-drilling undercut anchors can reduce the time and cost associated with installation and ensure good compliance between the undercut geometry and the anchor-bearing surfaces.

Note: The anchor embedment is fixed for a given anchor diameter (Figure 4-3).

4.2.3 Screw Anchors

Screw anchors are typically installed in predrilled holes using an electric setting tool or a torque wrench. During setting, the screw anchor cuts threads into the wall of the hole. Setting is complete when the head of the screw contacts and clamps the base plate or other element being fastened. To avoid stripping the threads in the concrete, the specified maximum torque should not be exceeded during setting. Some screw anchors are approved for loosening and retightening; however, in general, they cannot be proof-loaded.

Screw anchors (Figure 4-4) transfer tension loads via the interlock of the screw threads with the matching female threads cut into the concrete. In this sense, they transfer loads in much the same way as a bonded anchor (i.e., with a distributed stress field over the length of the anchor). They are often used for light and medium-duty applications, where speed and ease of installation is the main factor of consideration. The high hardness required for cutting the threads into the concrete makes screw anchors susceptible to hydrogen embrittlement and stress corrosion, particularly under the head, and caution should be exercised where they are used in unprotected environments.

@seismicisolation

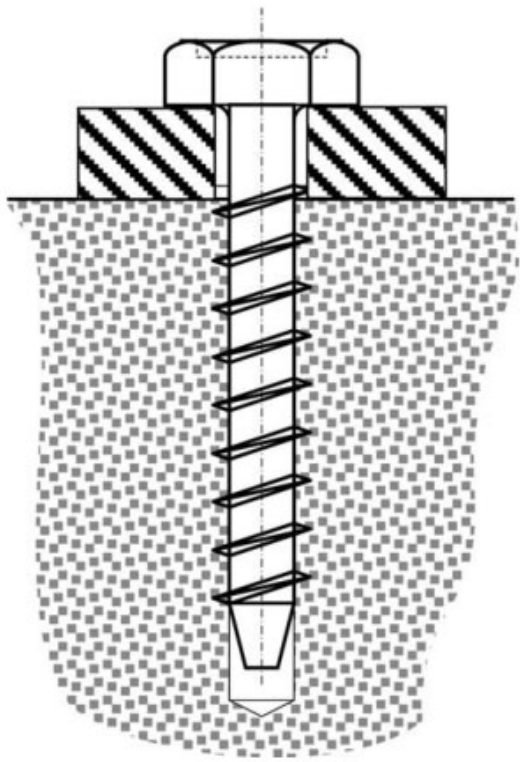

Figure 4-4. Screw anchor.

4.3 POST-INSTALLED GROUTED AND BONDED ANCHORS

4.3.1 Grouted Headed Anchors

A grouted headed anchor consists of a headed anchor bolt or a threaded rod equipped with a bearing plate and jam nuts anchored in a relatively large cored or formed hole with a flowable nonshrink grout (Figure 4-5). Grout materials may be primarily cementitious or may be polymer-based. Where pourable grout materials are used, grouted anchors are typically limited to vertical down applications such as base plates. The design of grouted headed anchors usually follows the procedures for cast-in-place headed anchors, assuming that the governing failure mode is concrete breakout. The bearing stresses at the head of the anchor typically create sufficient outward pressure to generate substantial friction at the grout/concrete interface. Where the hole size is large and there is a question about the bond between the grout and the concrete, a separate design check for bond failure may be appropriate (Zamora et al. 2003).

Where pretensioning of the anchor is required, a sleeve or bond breaker is recommended to provide an unbonded length for tensioning (Figure 4-5) and to avoid spalling at the concrete surface.

@seismicisolation

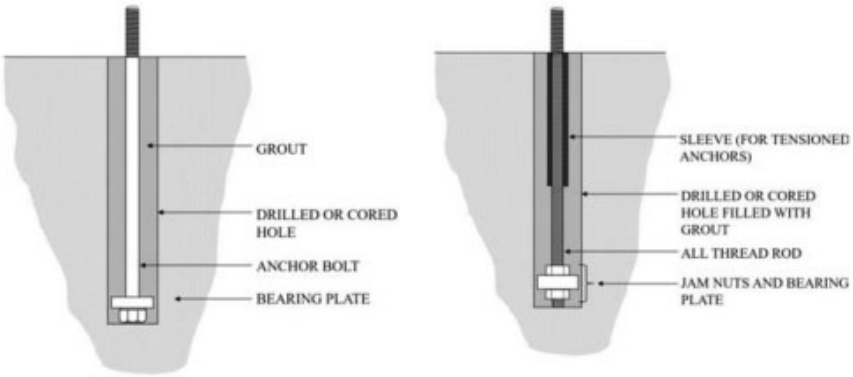

Figure 4-5. Examples of grouted headed anchors.

Depending on the embedment depth and diameter of the anchor, various techniques may be used to facilitate installation of the anchor.

4.3.2 Adhesive Anchors

The term bonded or adhesive anchor is usually understood as a threaded rod installed in a drilled hole with a flowable or injectable adhesive grout [Figure 4-6(a)]. Anchor rods for deep embedments may be equipped with a sleeve or wrapped with de-bonding paper to facilitate tensioning [Figure 4-6(b)]. Where cartridge injection systems are used, anchors may be designed for any orientation from vertical overhead to downhole. However, the injection of horizontal and overhead holes should always be performed with a piston plug or similar device that provides haptic feedback during the injection process to avoid the introduction of air voids in the grout.

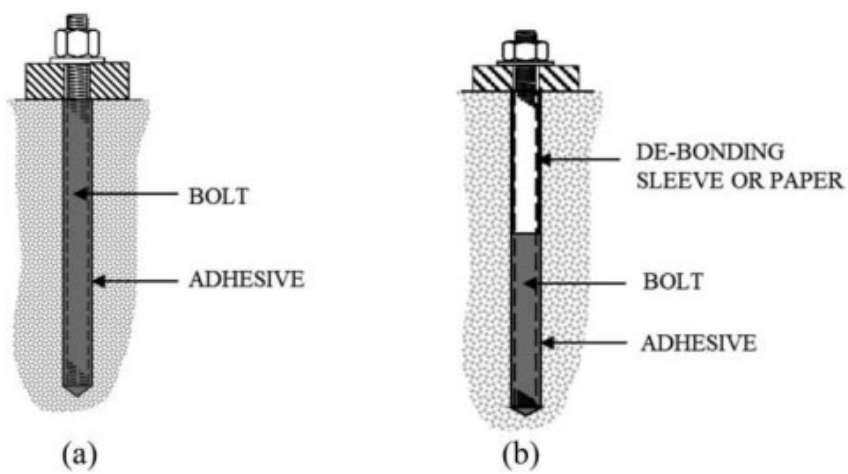

Figure 4-6. Adhesive anchors.

@seismicisolation

Typically, optimal performance of adhesive anchors is achieved with a relatively thin bond line [i.e., an annular gap of 1/16 to 1/8 in. (1.6 to 3.2 mm)]. The hole diameter may be increased to facilitate the installation of large-diameter or deep anchors; however, the use of larger-hole diameters requires larger volumes of adhesive with attendant potential for excessive heat generation during the curing process and resultant shrinkage.

Injectable adhesive grouts are also used to facilitate the installation of post-installed reinforcing bars, whereby the bar embedment is typically determined in accordance with development length provisions. Post-installed reinforcing bar connections are typically used for concrete-to-concrete connections such as wall-to-foundation connections, wall-to-slab connections, and column extensions.

Bonding materials for bonded adhesive anchors fall into three basic categories:

1. Bucket-mixed grouts,
2. Capsule anchors, and
3. Cartridge injection systems.

Bucket-mixed epoxy grouts, often mixed with sand, are employed for downhole anchors as well. Alternatively, bulk mixers may be used to automate the mixing and delivery process.

Capsule anchors were developed as a means of controlling the relative quantities of the resin, hardener, and aggregate components in the adhesive matrix by placing them together in a sealed glass ampoule. More recently, capsules fabricated from foilized polyester films have been introduced to reduce the hazards of accidental capsule breakage. Capsule anchor systems contain a resin component, aggregate/sand, and benzoyl peroxide as an accelerator or a hardener. The capsule is fragmented and integrated into the resin matrix during installation.

Cartridge injection systems are the most prevalent option for the delivery of two-component epoxies and other grouts used for anchoring. A and B component cartridges are typically joined by a plastic manifold that controls metering. A clear plastic nozzle equipped with an internal mixing helix attaches to the manifold and may be extended as necessary to enable delivery of the mixed adhesive to the back of the hole. The cartridges fit in dispensers that are similar in operation to a caulking gun, but often electrically driven to overcome the viscosity of the adhesive components. For larger installations, pneumatically driven dispensers are used. With each new cartridge, a certain quantity of adhesive must be expressed before injecting in the drilled hole to ensure proper mixing of the components.

Hybrid adhesives, comprised of both organic and inorganic components, are also used in cartridge injection systems. These are usually fast-cure adhesives and may exhibit superior resistance to high temperatures.

4.3.3 Torque-Controlled Adhesive Anchors

Torque-controlled adhesive anchors combine the working principles of adhesive anchors with expansion or undercut mechanisms. Properly functioning torque-controlled adhesive anchors (Figure 4-7) transfer tension loads via friction,

@seismicisolation

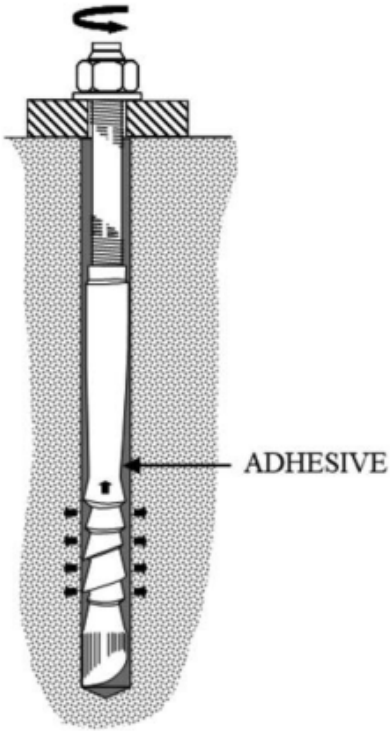

Figure 4-7. Torque-controlled adhesive anchors.

not bond. Because of their ability to re-expand on the application of tension loads, they are particularly suited for use in concrete, which may crack over the anchor life and may be used in a variety of applications where the flexibility of an adhesive anchor system is required. They are also less sensitive to hole-cleaning procedures than ordinary adhesive anchors. Grouted undercut anchors, like standard undercut anchors, transfer tension loads via bearing. The grout improves the form-fit between the anchor and the concrete, thereby reducing initial anchor movement under load.

4.4 CONSIDERATIONS IN POST-INSTALLED ANCHOR DESIGN

The following factors should be considered when designing connections using post-installed anchors:

1. Loading type and direction (Section 4.4.1);
2. Required edge distances, anchor spacing, embedment depth, and anchor length (Section 4.4.2);
3. Concrete quality and condition (Section 4.4.3);

@seismicisolation

4. Installation conditions (Section 4.4.4);
5. Exposure to weather, temperature fluctuations, chemicals, and fire (Section 4.4.5); and
6. Importance of the connection and consequences of failure (Section 4.4.6).

4.4.1 Loading Type and Direction

Direct tension applications are particularly important where a substantial portion of the load is sustained over time. For these cases, undercut systems are preferable. Where seismic loads dominate, adhesive anchors may be more suitable to engage a larger volume of the structure in resisting possible overloads. High-cycle fatigue loading requires that special attention be paid to the anchor and nut assembly and may also call for tensioning of the connection to avoid stress fluctuation in the bolt, in which case an anchor detail with sufficient stretch length to ensure acceptable preload retention should be used. In addition, detailing to prevent nut unwinding, especially in the case of alternating shear, should be employed. This may include the use of double nuts or lock nuts. The use of wedge-type expansion anchors to resist vibration loading, for example, in connection with compressors and pumps, has been associated with failure/loosening of the expansion mechanism over time. This may be addressed either by ensuring that sufficient preload is maintained in the bolt to prevent load fluctuation at the wedges or by the use of undercut or adhesive anchors. The use of Bellville (coned disc spring) washers may be appropriate to maintain tension.

4.4.2 Required Edge Distances, Anchor Spacing, Embedment Depth, and Anchor Length

Anchors that rely on friction produced through expansion forces typically require larger edge distances to avoid splitting failures during anchor installation or under working loads. Where the connection geometry requires that anchors be installed near free edges or close to one another, use of anchor types that do not generate expansion forces on installation may be preferable. These include adhesive anchors (but not torque-controlled adhesive anchors) and undercut anchors. For cases where the member depth is limited relative to the anchor embedment, the anchor selection should consider whether the required distance from the bottom of the drilled hole to the opposite concrete surface is adequate to prevent blow-through during drilling or splitting during anchor installation.

The anchor selection process should also include a check for the necessary anchor projection to accommodate the attachment requirements, including the length of thread available.

Information regarding the anchor length, minimum edge distance, anchor spacing, and member depth are contained in evaluation reports issued by ICC Evaluation Service, LLC (ICC-ES), or other evaluation services and in the product literature. Design for reduced anchor spacing and edge distance is addressed in the provisions of ACI 318-19, Chapter 17 (ACI 2019c).

@seismicisolation

4.4.3 Concrete Quality and Condition

Where it is suspected that the concrete contains significant voids, use of expansion, screw, and undercut anchors should be avoided. Likewise, capsule anchors, which provide a finite amount of adhesive, may be inappropriate. Where voids are suspected to be large, use of an adhesive anchor system with a screen tube as developed for use in hollow masonry may be advisable. Concrete that has suffered extensive chloride infiltration or that no longer provides corrosion protection for embedded steel items (e.g., reinforcement) through passivation of the steel surface may also dictate the use of highly corrosion-resistant anchor solutions (Section 4.4.5).

4.4.4 Installation Conditions

It should be verified that sufficient clearance exists to effectively perform the steps necessary for installation. For expansion screw and undercut anchors, this includes ensuring that adequate room is available for hammer drills, torque wrenches, and other setting equipment. For adhesive anchors, in addition to clearances, consideration should be given to the jobsite conditions during anchor installation, such as air temperature, possible exposure to rain, and, where deep holes are necessary, access to the hole for cleaning prior to adhesive injection.

In general, where anchors are to be installed overhead to carry sustained tension loads, special attention should be paid to selecting systems that have been thoroughly tested [e.g., in accordance with AC193 (ACI 2019a) or AC308 (ACI 2019b) as discussed in Section 4.8] for their ability to resist sustained tension. Mechanical anchor systems (i.e., expansion, undercut, screw) are usually easier to install overhead and are less susceptible to installation error than their adhesive counterparts. Where adhesive anchors must be installed overhead, specific attention should be paid to the selection of a system that has been prequalified for this orientation and that includes specific measures to avoid inclusion of air in the bond line during injection of the adhesive. Capsule anchors (Section 4.3.2) using "soft" foilized polyester film may offer specific advantages in this regard. Hybrid torque-controlled adhesive anchor systems (Section 4.3.3) have also been used for overhead installations.

For an additional discussion of constructability considerations, see Chapter 5, Section 5.4.

4.4.5 Exposure to Weather, Temperature Fluctuations, Chemicals, and Fire

The embedded portion of anchors is usually protected from corrosion by passivation of the steel surface in contact with the concrete. At the surface of the concrete, however, the anchor is particularly susceptible to corrosion. Where anchors are subjected to moisture or other possible corrosion-inducing agents, consideration must be given to a number of factors, including, but not limited to, compatibility of the anchor steel with that of the attached component or base plate (e.g., in terms of

@seismicisolation

separation on the galvanic scale), access to the connection for visual inspection, and the potential for nonvisual corrosion forms such as pitting or crevice corrosion. The use of adhesive anchors in concrete where temperatures may change considerably over time should be constrained to the concrete temperature limits for which the anchor systems have been prequalified. For additional discussion of temperature effects, including fire, see Chapter 2, Section 2.7.

Qualification provisions for adhesive anchors currently contain tests that measure the effect of alkalinity, water, and sulfur on bond strength. Where anchors are to be exposed to particularly aggressive environments, it is advisable to consult with the anchor manufacturer regarding specific testing to address the condition in question.

4.4.6 Importance of the Connection and Consequences of Failure

Post-installed anchor connections may be deserving of special attention if they (1) transfer loads as part of the structural load path of a building or other structure, (2) are used in a building or structure that has been assigned a high importance classification (e.g., emergency response facilities), or (3) should be designed with post-installed anchor systems that are more robust. Post-installed anchor bolts that tend to be more robust include most undercut anchor systems, some heavy-duty expansion anchors, and many adhesive anchor systems.

4.5 POST-INSTALLED ANCHOR DESIGN

The design of proprietary post-installed anchors usually depends on information developed via prequalification testing. ACI 355.2-19 is a prequalification standard for post-installed mechanical anchors that provides data for design in accordance with ACI 318-19, Chapter 17. ACI 355.4-19 (ACI 2019f) (US customary units) and ACI 355.4M-19 (metric units) (ACI 2019g) are prequalification standards for post-installed adhesive anchors that provide data for design in accordance with ACI 318-19, Chapter 17 and ACI 318M-19, Chapter 17 (ACI 2019d), respectively.

4.5.1 Allowable Stress Design

Traditionally, post-installed anchor design has been based on mean ultimate test data divided by a global safety factor of 4. This approach has been replaced by a system involving more rigorous qualification testing and strength design concepts.

4.5.2 Strength Design

The use of the Concrete Capacity Design method contained in ACI 318-19, Chapter 17 and ACI 349-13, Appendix D requires, at a minimum, the following information for the specific post-installed anchor in question (ACI 2013):

1. Anchor category (1, 2, or 3) for determination of appropriate strength-reduction factors;

@seismicisolation

Note: For specific anchor category designation, consult the post-installed anchor manufacturer or associated evaluation report from ICC-ES or other evaluation service.

2. k_c-factor(s) for determination of concrete breakout capacity in uncracked and cracked concrete, as applicable;
3. Characteristic bond strength in uncracked and cracked concrete for adhesive anchors, as applicable;
4. Steel strength and critical cross-sectional area;
5. Effective embedment depth, h_{ef};
6. Effective length, ℓ_e, and diameter, d_a, for determination of shear capacity;
7. Bolt elongation and cross-section reduction at break for determination of ductility status;
8. Minimum member thickness, critical edge distance (for expansion anchors), and minimum edge and spacing dimensions;
9. Presence of supplementary reinforcement;
10. Pullout values as applicable for static and seismic tension; and
11. Seismic shear capacity as applicable.

This information should be documented in accordance with ACI 355.2-19 and ACI 355.4-19/ACI 355.4M-19 and/or in accordance with ICC-ES Acceptance Criteria AC193 (2019) for mechanical anchors or AC308 (2019) for adhesive anchors.

4.5.3 Ductility of Post-Installed Anchors

ACI 318-19, Section 2.3 contains the following definition of a ductile steel element:

> Ductile steel element—An element with a tensile test elongation of at least 14% and reduction in area of at least 30%. A steel element meeting the requirements of ASTM A307 shall be considered ductile. (ASTM 2021a).

The elongation and cross-section reduction requirements were originally selected to correspond to those of ASTM A193/A193M B7 (ASTM 2020), a common anchoring material. ASTM A193/A193M B7 now exceeds these requirements. The commentary notes that the measurement of elongation should be taken over the requisite gauge length specified in the appropriate ASTM standard for the specimen in question. In most cases, ASTM F606/F606M (ASTM 2021b) is taken as the applicable standard, and the gauge length is typically five diameters.

Note: ASTM F606/F606M also allows for the turning of dog-bone tension specimens from threaded parts. (For cold-worked specimens, this may remove the hardened portions of the bolt.) Most steels used for the production of post-installed anchors will meet these requirements, although establishing this via test can prove challenging.

@seismicisolation

It should also be noted that typical reinforcing bars do not meet this requirement since their elongation is measured over a length corresponding to one full repeat of the deformation pattern. Thus, the definition of what is "ductile" and what is not becomes somewhat arbitrary in practice.

Ductile steel elements are necessary for better load distribution to anchors in groups, and as such, ACI 318-19, Chapter 17 provides a higher strength-reduction factor for the steel resistance to anchors that qualify as ductile. In addition, ductile steel elements are a prerequisite to satisfy the requirements for ductile anchor design in ACI 318-19, Section 17.10 (Section 4.6).

Practically speaking, most post-installed mechanical (expansion, undercut, screw) anchors will not satisfy the ductile design criteria of ACI 318-19, Chapter 17; that is, for the embedment depth-to-diameter ratio and steel grade typically found in common mechanical anchors, it is not possible to demonstrate by calculation that steel failure will control the tension or shear strength, even for higher-strength concretes. Some undercut anchor systems are adaptable to deeper embedments, and in these cases, a ductile anchor design may be possible. It is also possible to embed adhesive or grouted anchors at sufficient depth to ensure steel failure; in such cases, the use of an unbonded length or projection of the anchor element out of the concrete at sufficient distance (as with a vessel anchor chair) is required to achieve a meaningful stretch.

4.6 SEISMIC LOADING

Post-installed anchors must satisfy certain qualification requirements so as to be used to resist seismic loads in a structure assigned to Seismic Design Category C, D, E, or F. These involve the performance of specific tests and application of acceptance criteria for qualification and determination of relevant design parameters.

ACI 318-19, Chapter 17 and ACI 318M-19, Chapter 17 reference ACI 355.2-19 for the qualification of expansion and undercut anchors. This document has been incorporated into acceptance criteria used by the ICC Evaluation Service (ICC-ES) for the issuance of Evaluation Service Reports on anchors to demonstrate conformance with IBC (ICC 2021) Section 104.11, *Alternative Materials, Design and Methods of Construction and Equipment*. AC193 (2019) provides acceptance criteria for mechanical anchors that incorporate the requirements of ACI 355.2-19.

ACI 318-19, Chapter 17 and ACI 318M-19, Chapter 17 also reference ACI 355.4-19 (customary units) and ACI 355.4M-19 (metric units), respectively, for the qualification of adhesive anchors. AC308 provides acceptance criteria for adhesive anchors and for post-installed reinforcing bar systems. In general, it references the requirements of ACI 355.4-19/ACI 355.4M-19.

@seismicisolation

For further information on seismic design of anchors, see Chapter 3, Section 3.11.

4.7 DESIGN FOR HIGH-CYCLE FATIGUE

High-cycle fatigue is handled in a manner similar to that for cast-in-place anchors (Chapter 3, Section 3.10.1). In addition, as discussed in Section 4.4.1, detailing to prevent nut unwinding should be employed.

4.8 POST-INSTALLED ANCHOR QUALIFICATION

Requirements for qualification testing and assessment of post-installed anchors are defined by ACI 355.2-19, ACI 355.4-19/ACI 355.4M-19, and the relevant acceptance criteria (e.g., AC193 and AC308). Three types of tests are included:

1. Reference tests—Reference tests establish a baseline for anchor evaluation.
2. Reliability tests—Reliability tests are designed to test the anchor function under less-than-ideal installation and use conditions to determine whether there exists a unique susceptibility to foreseeable variations from manufacturers' installation mandates. Reliability tests are not intended to anticipate gross errors in installation or to sanction the incorrect installation of the tested products.
3. Service condition tests—Service condition tests establish the anchor conformance to design models for service conditions (edge distance, spacing, member thickness), shear, and seismic loading.

Because of the relative complexity and sensitivity of the testing involved, it is important that the testing and evaluation agency be accredited for the relevant standards under the guidelines provided in ISO/IEC 17025 (ISO 2017), *General Requirements for the Competence of Testing and Calibration Laboratories* (formerly known as ISO Guide 25), and has demonstrated experience and competence in performing the required tests. Evaluation reports issued by conformity assessment bodies such as ICC-ES or the IAPMO Uniform Evaluation Service provide a means of verifying compliance with these standards.

4.9 DESIGN OF POST-INSTALLED REINFORCING BAR CONNECTIONS

Post-installed reinforcing bar connections are common in construction for a variety of cases, including column and slab extensions, foundation augmentation,

@seismicisolation

wall thickening, slab-to-wall connections, among others. The most common approach to the design of post-installed reinforcing bars is to refer to the development length provisions of ACI 318-19. This approach should provide safe designs in the majority of cases. There may be situations, however, where multiple bars are installed at close spacing to function as an anchorage point (such as an embedded plate anchored with welded reinforcing bars). In such cases, concrete breakout failure modes should be checked (Chicchi et al. 2020).

The qualification of bonding systems for use in the construction of post-installed reinforcing bar connections is currently addressed in AC308. The tests include a verification of installation feasibility at embedment depths up to 60 bar diameters and a check on the stiffness properties of the bonding material for compatibility with cast-in bar behavior.

References

ACI (American Concrete Institute). 2013. *Code requirements for nuclear safety-related concrete structures and commentary*, ACI 349-13. Farmington Hills, MI: ACI.

ACI. 2019a. *Acceptance criteria for mechanical anchors in concrete elements*, AC193. International Code Council Evaluation Service. Farmington Hills, MI: ACI.

ACI. 2019b. *Acceptance criteria for post-installed adhesive anchors in concrete elements*, AC308. International Code Council Evaluation Service. Farmington Hills, MI: ACI.

ACI. 2019c. *Building code requirements for structural concrete and commentary*, ACI 318-19. Farmington Hills, MI: ACI.

ACI. 2019d. *Building code requirements for structural concrete and commentary (metric)*, ACI 318M-19. Farmington Hills, MI: ACI.

ACI. 2019e. *Qualification of post-installed mechanical anchors in concrete and commentary*, ACI 355.2-19. Farmington Hills, MI: ACI.

ACI. 2019f. *Qualification of post-installed adhesive anchors in concrete and commentary (inch-pound units)*, ACI 355.4-19. Farmington Hills, MI: ACI.

ACI. 2019g. *Qualification of post-installed adhesive anchors in concrete and commentary (metric units)*, ACI 355.4M-19. Farmington Hills, MI: ACI.

ASTM International. 2020. *Standard specification for alloy–steel and stainless steel bolting for high temperature or high pressure and other special purpose applications*, ASTM A193/A193M-20. West Conshohocken, PA: ASTM.

ASTM. 2021a. *Standard specification for carbon steel bolts, studs, and threaded rod 60,000 psi tensile strength*, ASTM A307-21. West Conshohocken, PA: ASTM.

ASTM. 2021b. *Standard test methods for determining the mechanical properties of externally and internally threaded fasteners, washers, direct tension indicators, and rivets*, ASTM F606/F606M-21. West Conshohocken, PA: ASTM.

Chicchi, R., A. H. Varma, J. Seo, T. Bradt, and E. McCarthy. 2020. *Experimental testing of tension-loaded deformed anchors in concrete. ACI Struct. J.* 117 (5): 133–146.

ICC (International Code Council). 2021. *International building code*. Washington, DC: ICC.

ISO (International Standards Organization). 2017. *General requirements for the competence of testing and calibration laboratories*, ISO/IEC 17025. Geneva: ISO.

Zamora, N. A., R. A. Cook, R. Konz, and G. R. Consolazio. 2003. "*Behavior and design of single, headed and unheaded, grouted anchors.*" *ACI Struct. J.* 100 (2): 222–230.

@seismicisolation

@seismicisolation
@seismicisolation

CHAPTER 5
Installation and Repair

5.1 INTRODUCTION

This chapter provides basic information regarding installation of anchors. Both cast-in-place and post-installed anchors are covered. Anchor constructability considerations that address and detail quality control, inspection, design, and construction practices that will help ensure constructible and structurally effective anchor installations are then outlined. Finally, anchor repair procedures are provided, with specific recommendations made for the repair of common anchor installation problems such as misalignment and erroneous projections.

5.2 CAST-IN-PLACE ANCHOR INSTALLATION

1. Unless otherwise specified on design drawings, installation tolerances should be as given in Table 3-9.
2. Anchors should be securely tied in position so as not to be dislodged during concrete installation. Tack welding of anchor bolts for securing is strictly forbidden.
3. If specified on design drawings, anchor rods should be wrapped with nonbonding tape for the required length and location shown on design drawings.
4. Where anchor sleeves are shown on the drawings or specified:
   (a) The top of the anchor sleeves should be cut off at the bottom of the structure or equipment base/top of grout elevation after the concrete is placed and before setting the base of the structure or equipment and grouting.
   (b) Unless otherwise specified on design drawings, anchor sleeves should be filled with one of the following materials after the concrete is placed

@seismicisolation

and before setting the structure or equipment base and grouting: nonbonding moldable material (e.g., a silicone-based compound of heavy consistency) and elastomeric moldable nonhardening material (e.g., acrylic roof coating).

(c) Water or other loose particles should not be permitted to collect in sleeves before the sleeves are filled.

5. Threads at top of anchor rods should be covered with duct tape or other suitable means to keep them clean and to prevent any damage that might occur during concrete placement, preparation of the foundation for grouting, and grouting.
6. Unless otherwise specified on design drawings, nuts at top of anchors should be tightened to a snug-tight condition, defined as the tightness that is attained with a few impacts of an impact wrench or with the full effort of a man using an ordinary spud wrench.
7. For anchors at locations specified on design drawings that require the structure or equipment base to slide for expansion and/or contraction purposes, the anchors should be installed as follows:
   (a) Two top nuts should be provided at the top of the anchor.
   (b) Lower top nut should be hand-tightened and then backed off a half turn leaving approximately 1/16 in. (1.5 mm) clearance between the lower top nut and structure or equipment base.
   (c) Upper top nut should then be installed and jammed against the lower top nut.

5.3 POST-INSTALLED ANCHOR INSTALLATION

Successful installation of post-installed anchors depends largely on the experience of the installer with the product in question, the ease of access to the anchor location, field conditions, and the degree to which the anchor installation is verified and inspected. Training and, where appropriate, certification of installers for the installation of specific anchor types is advisable, particularly for adhesive anchors that are to be used to carry substantial loads or sustained loads. Training may be accomplished through the manufacturer or through third-party certification organizations, but in all cases, it should focus on three essential aspects: (1) evaluation of site conditions; (2) a thorough understanding of and adherence to the manufacturer's installation instructions; and (3) adherence to all safety requirements, including those related to respirable crystalline silica.

5.3.1 Mechanical Anchors

Mechanical anchors are typically less sensitive to hole cleaning, provided sufficient hole depth is furnished to permit installation of the anchor to the specified

@seismicisolation

embedment depth. Drop-in anchors should be checked for under-setting with the specified installation tool. Torque-controlled anchors that do not develop the specified torque within a reasonable number of turns (typically less than 5) should be abandoned or removed. Most undercut anchors provide a system of visual verification of a proper set.

5.3.2 Grouted Anchors

Grouted anchors are always installed down-hand (gravity assisted). Prefilling the hole and installing the anchor, which is the typical procedure for adhesive anchors, may not be practical for anchors with large anchor plate diameters. Care must be taken, however, to prevent the formation of air bubbles in the grout matrix during installation.

5.3.3 Adhesive Anchors

Adhesive anchors are most sensitive to hole preparation. The presence of dust, drilling slurry, or water can significantly disrupt the bond capacity of polymer grouts. It is critical that adhesive anchor hole cleaning steps as specified by the manufacturer for the drilling method and concrete condition (dry, wet) be followed so as to achieve the bond strength assumed for design. Hole roughness also plays an important role in bond development. For this reason, cored holes are typically less ideal for good adhesive anchor performance than those produced with rotary-impact hammers or rock drills, and cleaning directions for cored holes are often different from those used for hammer-drilled holes. Where deep holes are required, special provisions should be made to ensure that the holes are properly cleaned and dry. In particular, extensions on cleaning brushes and compressed air wands may be required. Where there is doubt about the competency of the concrete, it may also be necessary to inspect the holes prior to injection with a borescope or similar device.

Capsule anchors are typically installed by driving a chisel-pointed anchor rod chucked into a rotary impact drill through the capsule using a drilling and hammering action. The drilling and hammering action serves both to fragment the capsule and to mix and activate the components (resin and accelerator). Care must be taken to use a rotary-impact tool suitable for the size anchor being installed and to not overdrive the anchor (i.e., allow the drill to rotate longer than the specified period).

Capsule anchors set rapidly; however, the attainment of full strength is dependent on use of the correct-size rotary impact drill and protection of the anchor from loading or disturbance during the gel period. Because the quantity of resin provided by the capsule is limited, it is important that the hole diameter and depth be closely controlled. Multiple capsules may be used for larger hole diameters/depths. For these installations, use of an appropriately sized installation tool is critical.

Cartridge anchor systems offer the advantage of controlled resin metering and delivery and reduce the risks associated with the handling of volatile resin

@seismicisolation

components. Nevertheless, care must be exercised to ensure that properly mixed resin is injected without substantial voids in the drilled hole. In general, the following steps are common to all cartridge systems:

1. After installing a cartridge in the dispenser, an initial quantity of dispensed resin remains unmixed and must be discarded. This step must be repeated for each new cartridge. Where extensions on the injection nozzle are used, the extension must be removed to prevent the initial quantity of adhesive from each new cartridge from ending up in the hole.
2. Resin must be injected from the back of the hole to the front. For deep holes, it may be necessary to employ special methods to ensure that air will not be entrained in the injected adhesive. Air that is trapped in the hole by resin results in voids that not only reduce the bond area but may also negatively affect resin cure and promote corrosion of the embedded rod.
3. Unlike bucket-mixed or cementitious grouts, cartridge injection anchor systems are usually suitable for horizontal and, in some cases, overhead installation because of the use of thixotropic resin formulations. When installing adhesive anchors overhead, special measures must be taken to ensure that the resin remains in the hole and that the anchor rod does not displace downward during resin cure. Care must be taken to avoid skin and eye exposure to uncured resin.

5.3.4 Large Adhesive Anchors

Typical proprietary adhesive anchor systems provide engineering data for embedments up to 1 1/4 in. (32 mm) in diameter and 15 in. (380 mm) deep (12 diameters). For larger diameters and embedments, special provisions for installation and design are typically required.

Hole-cleaning methods suitable for shallower embedments may not be effective for deep holes. Compressed air, vacuums, and internal side-action wire brushes should be employed in repetitive sequences as required to produce a hole of the correct depth and with a relatively dust-free surface, particularly at the bottom of the hole.

Holes for larger anchors are often drilled with diamond core rigs. This typically results in smoother holes and reduced bond resistance. The reduction in bond resistance is aggravated if the drilling slurry is allowed to remain on the surface of the hole wall. Flushing of cored holes with water is the most common method of cleaning. Subsequent scouring with a wire brush and removal of dust and residual moisture with compressed air is recommended. Unlike cementitious grouts, which require that the hole be soaked with water prior to grout placement, adhesive grouts require a dry, clean hole for optimum performance.

Rock drills typically produce rougher hole surfaces. Cleaning methods appropriate for holes drilled with carbide bits are usually suitable for holes drilled with rock drills.

@seismicisolation

Proper installation of large-diameter adhesive anchors involves the following:

1. Ensuring proper cleaning of hole surfaces and removal of free water prior to injection,
2. Avoiding trapped air in the cured resin matrix,
3. Facilitating injection of large volumes of correctly metered adhesive within the adhesive pot life, and
4. Ensuring the correct placement of the anchor element after injection of the adhesive.

Pneumatically driven injection systems designed to accommodate large-volume cartridges may be coupled through a manifold to facilitate rapid adhesive delivery. Extensions attached to the static mixing nozzle and fitted with a donut-shaped stopper matched to the hole diameter may be used to prevent the introduction of air bubbles into the grout.

5.4 CONSTRUCTABILITY CONSIDERATIONS

Successful application of quality control, inspection, design, and construction practices will help ensure a constructible, structurally effective anchor installation. Discussions and recommendations for each of these processes are provided subsequently.

5.4.1 Implementation of Quality Plan

Quality control is a key factor in ensuring effective, constructible anchor installations. Experience has shown that the secondary costs of compensating for anchors being misaligned or installed "out of plumb," having material properties noncompliant with construction specifications, and so on justify taking great care in the creation and implementation of an effective quality control plan. Such a plan should address the following issues: (1) Engineering specifications and drawings should indicate clearly the intent of the design, including individual anchor and hardware details, required material properties, location of the anchor, projection and embedment dimensions with respect to the finished concrete grade, taping requirements, location and plumb installation tolerances, coating, length, diameter, length of the threaded portion, diameter and thickness of washers, number of nuts (single, double, single, or double-plus leveling, etc.), sleeve details, and tensioning requirements, if any (Swiatek et al. 2004). Material certification submittal requirements for the fabricator should be clearly stated in the material requisition documents. These submittals should include listing all information required by ASTM-specified material certifications, including options that are applicable. Certifications are recommended for high-strength anchors and for critical applications.

@seismicisolation

5.4.2 Cast-in-Place Anchor Inspection Plan

An inspection program should be established that verifies proper installation of the anchor prior to the placement of concrete (ACI 349-13, Section D.9, ACI 2013). Such a plan should ensure that

1. Size and location of anchors are in accordance with the design drawings and specifications. Anchors are installed according to the tolerances shown in the contract documents. ACI 117 (ACI 2014), Table 5.1.1.1.1 provides construction tolerances for anchor rods. (Recommended tolerances are given in Table 3-10 of this publication).
2. Anchors are securely held in place to prevent movement during anchor placement. Tack welding of anchors for securing is strictly forbidden.
3. Rods or bolts are coated correctly.
4. Threads at the connecting nut end of rods or bolts are lubricated with the correct materials prior to installation.
5. Rods or bolts are taped if required.
6. Anchor plates are provided if shown on drawings or required by specifications (see Chapter 3, Section 3.13 of this book).
7. Method of installation is known by the installer (e.g., is tensioning required beyond the snug-tight provisions?) and the installer has a plan for the sequencing of tightening of nuts.

5.4.3 Post-Installed Anchor Inspection Plan

Establishment of a comprehensive inspection regime for anchor installation can be a strong motivating factor in ensuring contractor compliance.

1. Preinstallation Inspection—This inspection typically includes a review of the means and methods to be used for the installation prior to start of the work, a verification of the use of the specified product, and detection of existing concrete embedments and reinforcing prior to commencement of drilling.

   A preinstallation inspection of mechanical anchors may include verification of the use of drill bits of the correct type and diameter, the methods for removing drilling debris from the hole, and the use of properly calibrated torque wrenches as required.

   A preinstallation inspection of adhesive anchors may include review of the following:

   - Methods for hole drilling and preparation, and grout injection;
   - Anchor-setting procedures;
   - Procedures to ensure protection from disturbance during the required cure period;
   - Drilled hole depth, diameter, and anchor lengths; and

@seismicisolation

- Proper storage and use of the adhesive components, including any preconditioning methods for cold or hot environments (should be checked against the manufacturer's requirements).

2. Ongoing Inspection and Proof Loading—Inspection during anchor installation is intended to verify compliance with the specifications as well as a successful anchor set. Proof loading is recommended as both a means of detecting unsuccessful anchor installations and as a motivational tool. Proof loading of torque-controlled anchors can be accomplished through a reapplication of the setting torque. Adhesive anchors may also be proof-loaded through the application of torque; however, it is preferable to use direct tension testing for these cases. The percentage of installed anchors to be proof-loaded typically ranges from 10% to 50%, depending on the criticality of the installation. In general, anchor-proof loads are taken as the lesser of 50% of the anchor ultimate capacity as governed by bond or concrete failure, or 80% of the anchor yield capacity. Criteria for acceptance are usually characterized in terms of little or no perceptible movement of the anchor at proof load.

5.4.4 Specific Construction Practices and Safety Considerations

The following construction practices and safety considerations should be documented in the construction specifications and implemented by construction to provide safe installation and to help minimize anchor constructability problems/issues in the field, including the need for future anchor replacement or repair.

1. Thoroughly clean anchors of surface corrosion, thread cutting oil, or any other substance that could reduce bond to concrete. Common cleaning methods include wire brushing and/or applying a degreasing solvent. Any anchor found to be cracked, suffering from section loss, or loose should be considered for replacement unless accepted by the Responsible Engineer.
2. Have a registered surveyor be responsible for laying out anchors, as opposed to common practice whereby the general contractor's carpenter foreman handles the task (Fisher and Kloiber 2004). When possible, it is recommended that Total Station technology be used for the layout effort, as opposed to the more traditional string line and tape measure method (Nasvik 2005).
3. Ensure anchors maintain proper alignment and plumbness by rigidly wiring them to reinforcement prior to the placement of concrete. Use wood or steel templates firmly fastened to the footing or pedestal forms, or engineering-approved, vendor-supplied anchor stabilization products, for example, a template (Figure 5-1).

   Note: One method for avoiding template and anchor dislocation is to pour a mud mat beneath the proposed foundation. A rigid support frame is constructed and bolted to the mud mat—simultaneously supporting the template and ensuring no movement of the template or anchors occurs during concrete placement (Nasvik 2005).
4. Protect anchor threads against concrete spillage, rusting, and any other damage.

@seismicisolation

Figure 5-1. Manufacturer-supplied template.

5. Roughen the interface of a formed grout pocket to eliminate the possibility of bond failure between the grout and concrete. Alternatively, pockets can be formed with corrugated steel tubes to provide a structural interlock mechanism. Debonding tape is beneficial when an anchor that is to be pretensioned is installed inside the grout pocket.
6. Where drilling or coring of concrete is required, follow the requirements of OSHA 29 CFR 1926.1153 (OSHA 2016) to protect workers from respirable crystalline silica dust created during drilling, coring or cutting of concrete. Specific protective measures are required to be used to protect the worker from inhaling the dust that could lead to their developing serious silica-related diseases. Consideration of these protective measures should be made in the planning, schedule, and budget for post-installed anchors.

5.5 REPAIR PROCEDURES

When an anchorage system or component thereof that is installed does not adhere to the specified design requirements or construction tolerances, the structural adequacy of the installation and the need for repair should be verified by the Responsible Engineer and repair procedures implemented as necessary. It is critical that both the repaired anchorage system and the structural members being connected perform their strength and serviceability functions for their desired service life.

Throughout any repair, it is necessary to provide quality control in the form of inspections—possibly including load and nondestructive testing—or other reviews to verify the adequacy of the repair process and materials (ACI 349.3R-18, Chapter 8) (ACI 2018), as conditions may change. A final postrepair inspection is also recommended and should be documented for Responsible Engineer review.

@seismicisolation

The following sections discuss installation problems often encountered and address recommended methods for their repair.

5.5.1 Misalignment Issues

Misalignment issues pertain to anchors that have been installed "out-of-plumb" or outside construction specification location tolerances. Most often, these misalignments occur as a result of survey error or anchor shifting during placement of concrete. In some cases, vendor drawings with incorrectly detailed locations of the anchor bolts are the source of anchor bolt locations not matching equipment base plates. The impact is a base plate or an equipment base that will no longer fit the installed anchor layout. The following measures can be used when investigating anchors that have been installed outside acceptable installation tolerances. Each must be evaluated by the Responsible Engineer to determine applicability, economic impact, and structural adequacy of the proposed fix.

1. Evaluate the need for the nonconforming anchor. Perhaps not all are required for a particular installation. If not, the misaligned anchor can be cut flush with the surface and abandoned in place (Fisher and Kloiber 2004).

   Note: According to OSHA, if less than four anchors are secured for a column, the erector must be made aware of the situation and take the necessary precautions when erecting the member—holding the column with a crane, guying the column, etc. (OSHA 29 CFR Part 1926 Subpart R, Section 1926.755) (OSHA 2001).

2. Bend a misaligned (out-of-plumb) anchor into position. This may require removal of the concrete around the anchor to soften the bend angle. Engineering assessment of the bend on anchor strength and/or anchor fatigue properties may be required. This repair method is not recommended for high-strength anchors (Fisher and Kloiber 2004).

3. Remove a misaligned anchor by core drilling and replacing it with post-installed anchors.

4. Drill an oversized hole in the base plate as required to fit a misaligned anchor. Install an A36 thickened plate washer over the anchor and weld the washer directly to the base plate. Size the washer to ensure adequate transfer of design loads to the anchor. Spherical or beveled washers may be required to provide uniform bearing at the washer–base plate interface. Some misaligned anchors may also require modification and reinforcement of the column web or flange (Fisher and Kloiber 2004). As an alternative to installing the plate washer, adequate shear transfer can be accomplished by filling the annular space between the anchor rod and anchor hole with grout.

5. Fabricate and weld base plate extension if the misaligned anchor falls outside the area of the existing base plate.

6. Fabricate a new base plate to fit the misaligned anchors.

7. Demolish and reconstruct the concrete element that contains nonconforming anchors.

@seismicisolation

5.5.2 Inadequate Anchor Projection

The following measures can be utilized when anchors are installed with inadequate projections, that is, if threads are not projecting fully enough to completely engage the nut(s). Many of the solutions provided subsequently call for welding of the anchor; therefore, it is recommended that the Responsible Engineer review the weldability of the anchor material prior to implementing any of these proposed methods.

1. Evaluate the structural effectiveness of the threads engaged to determine whether the installation will be acceptable with a partially installed nut. This can be done on the basis of a linear interpolation of full threads engaged versus the number of threads installed within the nut (Fisher and Kloiber 2004).
2. If the structural effectiveness of the engaged threads is not adequate, weld the nut to the anchor to achieve the required anchorage capacity (Figure 5-2). The Responsible Engineer should confirm that weld acting alone will develop the strength of the anchor, because the capacity of the welds and the engaged threads are not additive. Alternatively, weld the anchor directly to the base plate if the hole diameter is not excessive (Figure 5-3).

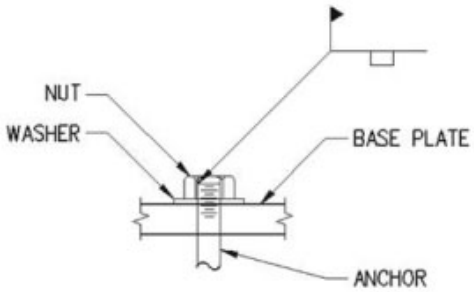

Figure 5-2. Welding of nut to anchor.

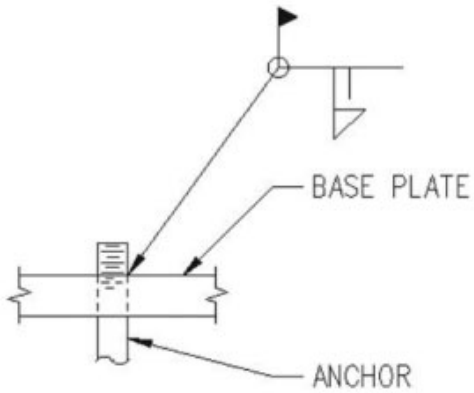

Figure 5-3. Welding of anchor to base plate.

@seismicisolation

3. Extend the short projection anchors by welding on a threaded extension. Figures 5.4 and 5.5 show weld details that could be used to properly extend anchors (Fisher and Kloiber 2004). Before welding, confirm that the anchorage material is weldable to the strength required.

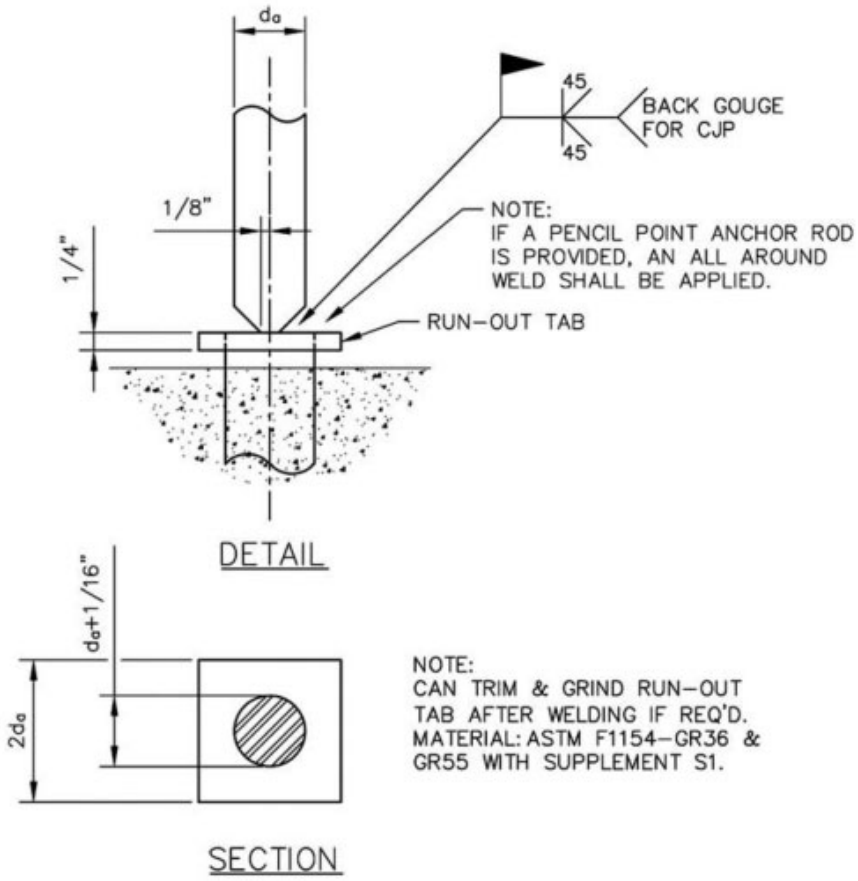

IN ORDER TO PROPERLY GROOVE-WELD A THREADED STUB TO EXTEND AN ANCHOR ROD, IT IS NECESSARY TO FIRST PREPARE THE JOINT BY BEVELING THE STUB TO A CHISEL POINT. NEXT, A RUN-OUT TAB MUST BE PROVIDED. THIS CAN BE DONE BY TAKING A 1/4" THICK PLATE WITH A HOLE 1/16" LARGER THAN THE ROD. THEN TACK-WELD THE TAB FLUSH WITH THE TOP OF THE EMBEDDED ROD. THE WELD THEN CAN BE PLACED IN THE GROOVE AND EXTENDED OUT ONTO THE PLATE. IF A CJP WELD IS REQUIRED THE WELD SHOULD BE GOUGED TO SOUND METAL BEFORE WELDING THE SECOND SIDE. THIS CAN BE DONE WITH A GRINDER. IF NECESSARY FOR CLEARANCES, THE RUN-OUT AND EXCESS WELD CAN BE CUT OFF AFTER THE WELD IS COMPLETE.

Figure 5-4. Welding of anchor extension—Option 1.

@seismicisolation

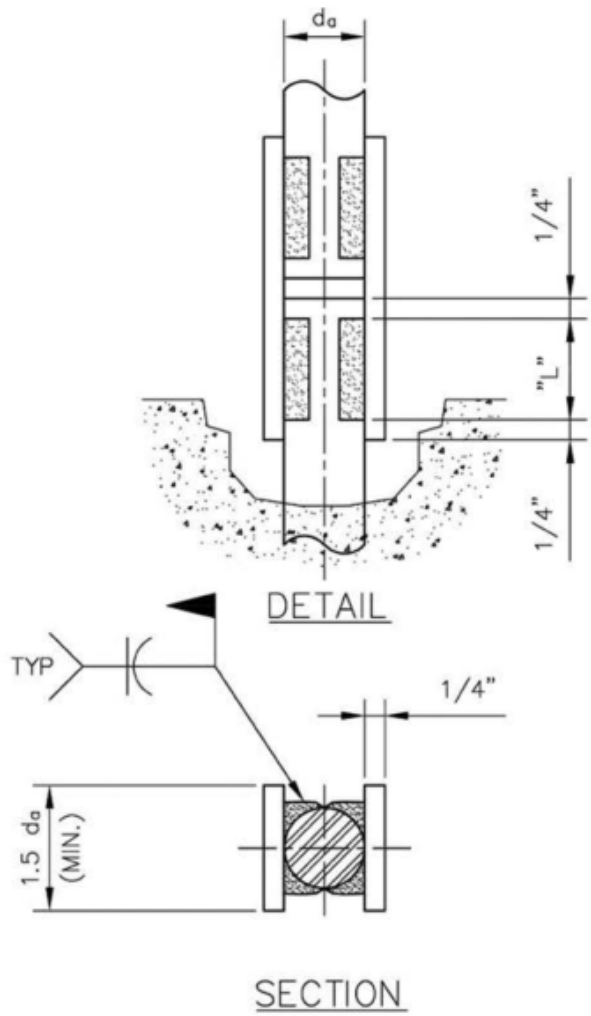

IT IS POSSIBLE TO SPLICE AN ANCHOR ROD USING TWO PIECES OF FLAT BAR STOCK.

1. THE STRENGTH OF THE FOUR FLARE BEVEL GROOVE WELDS ARE TO BE CALCULATED BY THE ENGINEER.
2. THE MINIMUM WELD LENGTH "L" SHOULD BE AT LEAST 1".
3. THE REQUIRED PLATE AREA SHOULD BE CHECKED FOR TENSION CAPACITY.

IT IS IMPORTANT THAT THE WELDER BE CERTIFIED TO WELD IN THE VERTICAL POSITION. OSHA REQUIRES ALL ANCHOR–ROD MODIFICATIONS TO BE APPROVED BY THE ENGINEER OF RECORD.

Figure 5-5. Welding of anchor extension—Option 2.

@seismicisolation

4. Use a coupling nut to extend the anchor. The AISC Manual shows coupling nuts that are capable of developing the full strength of the anchor. To accomplish this, the concrete will have to be chipped away enough to cut off the old anchor and thread the embedded portion as required to attach the coupling nut (Fisher and Kloiber 2004).
5. In cases where two nuts are called for, evaluate whether adequate bolt length is provided to install one nut and whether the installation will be acceptable with only one nut provided.

5.5.3 Excessive Anchor Projection

When anchors are installed with excessive projections, a scenario may arise where the threaded portion of the anchor stops somewhere above the top side of the connected element (e.g., base plate), resulting in a situation where the nut cannot be fully tightened to the element. In such cases, a filler plate or washers can be added, so that the nut can be fully tightened against the connected element. This filler plate or these washers must be welded directly to the base plate if shear transfer through the anchors is required and the holes in the base plate are oversized to the extent that excessive slippage would occur before the edges of the base plate holes engage with the anchors. Alternatively, shear transfer can be accomplished by filling the annular space between the anchor rod and the anchor hole with grout.

5.5.4 Material Property Issues

The following measures can be used when investigating anchors that have already been installed but are later discovered to have inadequate material strength properties, for example, because of fabrication errors or incorrect anchors being installed. These measures can also be used for installations where existing anchors need to be upgraded as a result of design load increases: (1) Remove the unacceptable anchor by core drilling and replace it with an adequately sized post-installed anchor. (2) Use a chip and repair method as illustrated in Figure 5-6—which reflects an existing compressor anchor installation with tensioned anchors. In this method, concrete is chipped away to expose and cut off the existing anchor. The remaining portion is then threaded and a repair coupling, which includes a flange with holes, is attached. Four threaded rods are put through the flange holes and extended down into the existing foundation (deeper drilling may be required for these four threaded rod "tendons"). Add the top anchor portion that extends upward (Rowan 1993).

5.5.5 Failure to Tape Pretensioned Anchors

As stated previously, industrial tape is to be applied to the intended "stretching length" of pretensioned anchors. On rare occasions, this concrete separation measure is not applied, resulting in an anchor that cannot be effectively pretensioned. When this occurs, it is recommended that the affected anchor be reworked using the reinforcement measures discussed previously in Section 5.5.4(2). Such measures will result in a high-load-resistant installation, without having to core drill and completely remove the existing anchor. Alternative

@seismicisolation

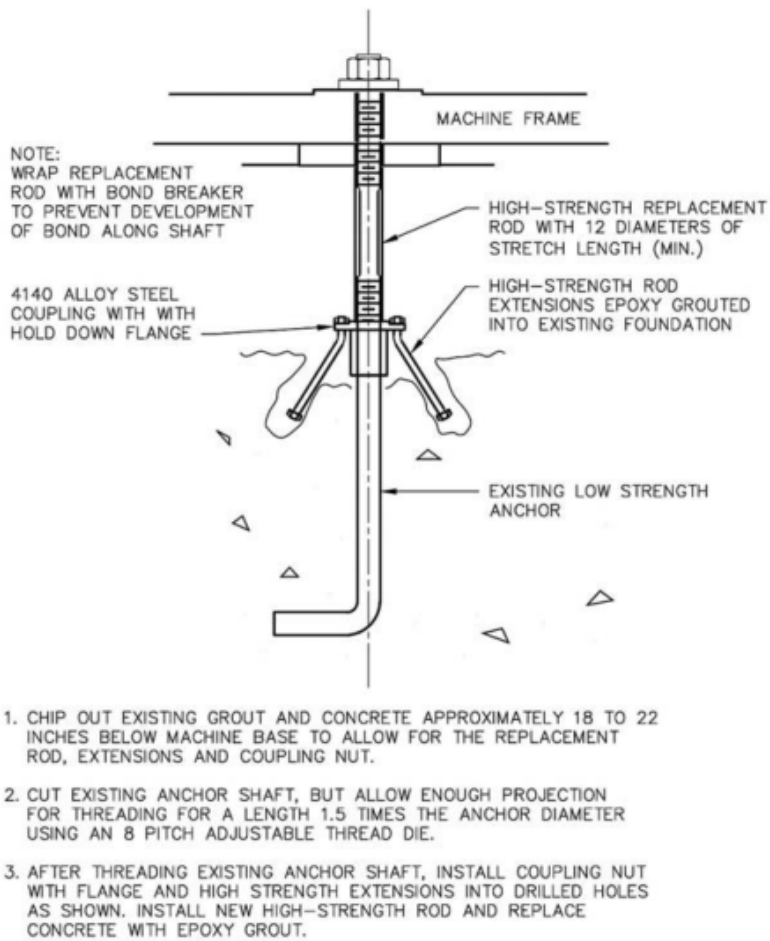

Figure 5-6. Chip and repair method.

Source: Reprinted with permission from Robt. L. Rowan & Associates, Inc.

measures include the following: (1) extending the anchor (Section 5.5.2) to create a tensionable "High-Chair" arrangement, or (2) core drilling around the anchor to provide a gap (annular space) to allow stretching.

5.5.6 Interference with Existing Reinforcement

As discussed previously, interferences with existing reinforcement can result in the inability to install anchors in their desired locations. Interferences must be evaluated on a case-by-case basis to determine whether to move the anchor versus the reinforcement. If the anchor needs to be relocated, many of the repair procedures discussed previously can be evaluated and applied as deemed appropriate (Rowan 1993).

@seismicisolation

References

ACI (American Concrete Institute). 2013. *Code requirements for nuclear safety-related concrete structures and commentary*, ACI 349-13. Farmington Hills, MI: ACI.

ACI. 2014. *Guide for tolerance compatibility in concrete construction*, ACI 117-14. Farmington Hills, MI: ACI.

ACI. 2018. *Report on evaluation and repair of existing nuclear safety-related concrete structures*, ACI 349.3R-18. Farmington Hills, MI: ACI.

Fisher, J. M., and L. A. Kloiber. 2004. *An ounce of prevention*. Modern Steel Construction. Chicago: AISC.

Nasvik, J. 2005. "Concrete basics—Setting anchor bolts." In *Concrete construction (November)*. Washington, DC: Hanley Wood. Accessed June 1, 2022. https://www.concreteconstruction.net/how-to/construction/setting-anchor-bolts_o

OSHA (Occupational Safety and Health Administration). 2001. *Safety and health regulations for construction, steel erection, column anchorage*. OSHA 29 CFR Part 1926 Subpart R, Section 1926.755. Washington, DC: US Dept. of Labor, OSHA.

OSHA. 2016. *Safety and health regulations for construction, toxic and hazardous substances, respirable crystalline silica*. OSHA 29 CFR Part 1926 Subpart Z, Section 1926.1153. Washington, DC: US Dept. of Labor, OSHA.

Rowan, R. L. 1993. "New techniques for foundation repairing." In *Power Machinery and Compression Conf.* Houston: University of Houston.

Swiatek, D., E. Whitbeck, and V. Shneur. 2004. *Anchor rods—Can't live with 'em, can't live without 'em*. Modern Steel Construction. Chicago: AISC.

@seismicisolation
@seismicisolation

@seismicisolation
@seismicisolation

Appendix: Examples

EXAMPLE 1: ANCHOR DESIGN FOR COLUMN PEDESTALS

(Tension and Shear Reinforcement Not Considered)
Note: All references are to ACI 318-19 unless otherwise noted.

Base Plate Connection Data

W12 × 45 column

Depth, $d = 12.0$ in.

Flange thickness, $t_f = 0.575$ in.

Four anchors on 16 in. × 16 in. spacing, ASTM F1554 Grade 36 anchor material (ASTM 2020)

Base plate: 1 ½ in. thick × 20 in. wide × 20 in. long

Factored base loads (gravity plus wind − maximum uplift condition)

Shear (V_u) = 10 kips

Moment (M_u) = 60 kip-ft = 720 kip-in.

Tension (N_u) = 17 kips

Low-seismic area (ductility not required)

$f_c' = 4{,}000$ psi, standard weight concrete ($\lambda_a = 1.0$)

Pedestal Data

60 in. × 44 in. Pedestal (Sketch 3)

Anchors with a reinforcement of at least No. 4 bars between the anchor and the edge of concrete and with the reinforcement enclosed with stirrups (ties) spaced at not more than 4 in. (Note, this allows for $\Psi_{c,V} = 1.4$.)

Determining X, the compression zone (refer to Blodgett, *Design of Welded Structures*, Figure 18)

$Y/3 = X = (20 \text{ in.} - 12 \text{ in.} + 0.575 \text{ in.})/2 = 4.29$ in.
$Y = 3(4.29 \text{ in.}) = 12.87$ in.

$\sum M_P = 0$

$A = 8$ in. $\qquad B = 6 \text{ in.} - 0.575 \text{ in.}/2 = 5.71$ in.

$T(A + B) = N_u(B) + M_u \qquad T = (N_u(B) + M_u)/(A + B)$

@seismicisolation

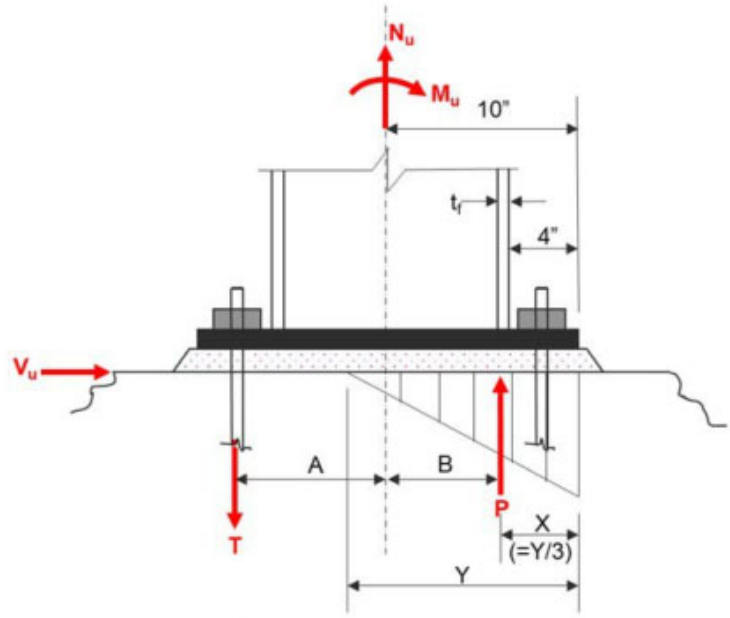

(P is assumed to be centered on compression flange.)

Example 1 Sketch 1

$T = (17(5.71) + 720)/(8 + 5.71) = 59.6$ kips for two anchors

$P = T - N_u = 59.6 - 17 = 42.6$ kips

Resisting friction load $(V_f) = \mu P$

$\mu = 0.40$ (ACI 349-13 D.6.1.4) (ACI 2013)

$V_f = 0.40 \times 42.6 = 17.0$ kips

$\phi = 0.70$ (Table 17.5.3b)

$\phi V_f = 0.70 \times 17 = 11.9 > 10$ kips **OK**

Therefore, anchors are not required to resist shear. However, the pedestal will have to resist the shear load coming into the pedestal from the friction.

Select Anchor Size

Try a 1 ¼-in.-diameter anchor ($A_{se,N} = 0.969$ in.^{2}, $f_{uta} = 58$ ksi)

For one anchor, $N_{sa} = A_{se,N} f_{uta} = 0.969 \times 58 = 56.2$ kips (17.6.1.2)

For two anchors, $N_{sa}(\text{tot}) = 112.4$ kips

ϕ for steel $= 0.75$ (Table 17.5.3a)

Anchor capacity $= \phi N_{sa}(\text{tot}) = 0.75 \times 112.4 = 84.3$ kips > 59.6 kips **OK**

@seismicisolation

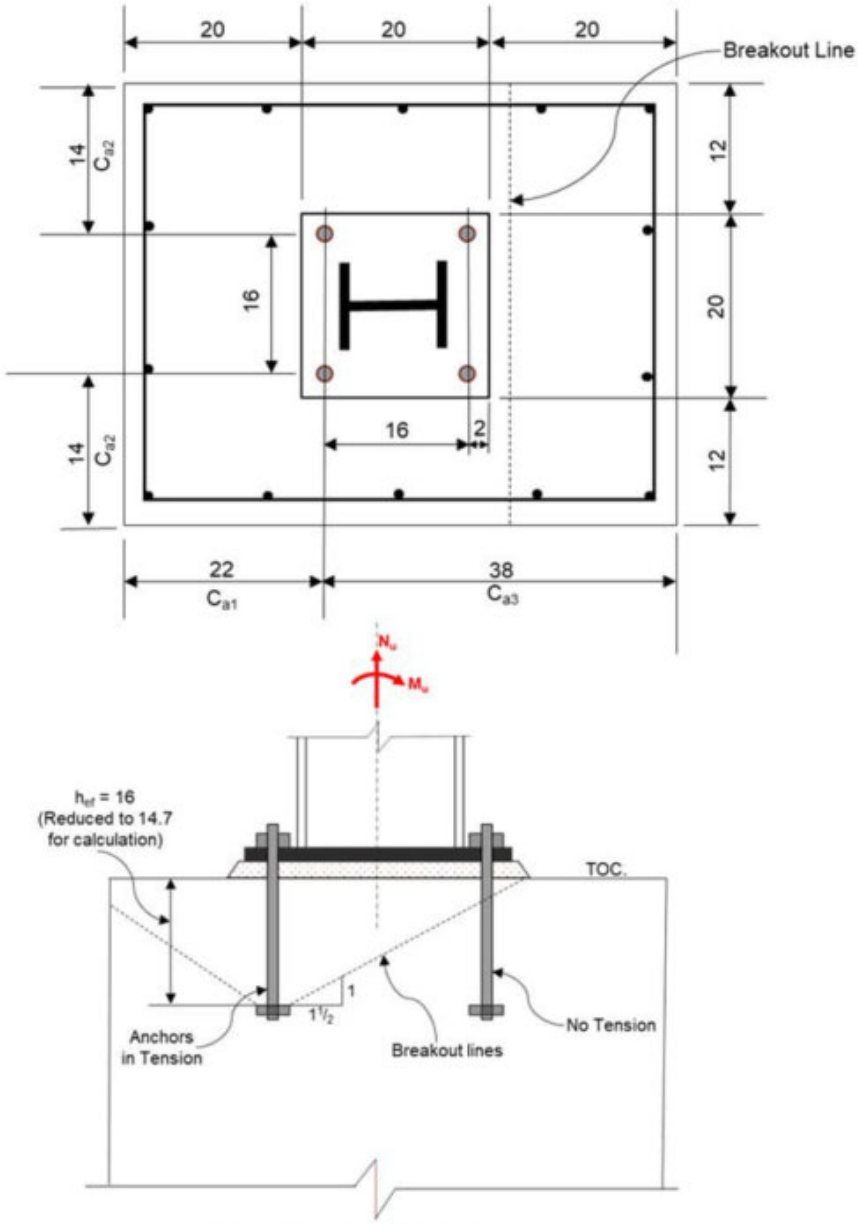

(Dimensions are in Inches)

Example 1 Sketch 2

@seismicisolation

Concrete Breakout Strength of an Anchor Group in Tension (N_{cbg})

If anchors are located less than $1.5h_{ef}$ from three or more edges, the maximum value of h_{ef} used to calculate A_{Nc}, the projected failure area for calculating the breakout strength of the anchor group in tension, should be the greater of $c_{a,\max}/1.5$ and $s/3$, where s is the maximum spacing among anchors in a group (Section 17.6.2.1.2).

$1.5h_{ef} = 24$, and both c_{a1} and c_{a2} are less than 24; therefore, h_{ef} that is used for calculations needs to be reduced.

$c_{a,\max}$ is the greatest of the influencing edge distances that do not exceed the actual $1.5h_{ef}$. (Commentary R17.6.2.1.2)

$c_{a,\max} = c_{a1} = 22$ in. $c_{a,\max}/1.5 = 22/1.5 = 14.7$ in. $s/3 = 16/3 = 5.3$ in.

Use $h_{ef} = 14.7$ in.

$A_{Nc} = 44 \times (22 + 1.5 \times 14.7) = 1{,}938$ in.^{2} (Figure R17.6.2.1)

$A_{Nco} = 9h_{ef}^2 = 9 \times (14.7)^2 = 1{,}945$ in.^{2} (17.6.2.1.4)

$N_{cbg} = (A_{Nc}/A_{Nco})\Psi_{ec,N}\Psi_{ed,N}\Psi_{c,N}\Psi_{cp,N}\,\Psi_{m,N}\,N_b$ (17.6.2.1b modified to add $\Psi_{m,N}$)

$\Psi_{ec,N}$ = Modification factor for eccentricity. There is no eccentricity; therefore, $\Psi_{ec,N} = 1$ (17.6.2.3.1)

$\Psi_{ed,N}$ = Breakout edge effect factor, $c_{a\min} = 14 < 1.5h_{ef} = 22.1$; therefore, $\Psi_{ed,N} = 0.7 + 0.3\,c_{a\min}/(1.5h_{ef}) = 0.7 + 0.3\,(14)/22.1 = 0.891$ (17.6.2.4.1b)

$\Psi_{c,N}$ = Breakout cracking factor, modification factor for the influence of cracking in anchor regions at service load levels. No assurance can be given to the effect that the concrete will not crack; therefore, use $\Psi_{c,N} = 1$. (17.6.2.5.1)

$\Psi_{cp,N}$ = Breakout splitting factor. This factor is for post-installed anchors; for cast-in anchors, use $\Psi_{cp,N} = 1$. (17.6.2.6.2)

N_b = Basic single-anchor breakout strength, 11 in. $\le h_{ef} \le$ 25 in.; therefore, $N_b = 16\lambda_a(f_c')^{1/2}(h_{ef})^{5/3} = 16(1)(4{,}000)^{1/2}(14.7)^{5/3}/1{,}000 = 89.2$ kips (17.6.2.2.3)

$\Psi_{m,N}$ = Breakout overturning factor (not in ACI code at present; this is from EN 1992-4 (CEN 2018), described in Section 3.3.3 of this document.).

Internal lever arm, $z = 20$ in. – 2 in. – $Y/3 = 14.29$ in.

$h_{ef} = 14.7$ in. $z/h_{ef} = 14.29/14.7 = 0.97 < 1.5$; therefore, use equation (b):

$$\psi_{m,N} = 2 - \frac{z}{1.5h_{ef}} \ge 1.0$$

$\Psi_{m,N} = 2 - 14.29/(1.5(14.7)) = 1.35$

$N_{cbg} = (1{,}938/1{,}945)(1)(0.891)(1)(1)(1.35)(89.2) = 107$ kips

ϕ for concrete (supplementary reinforcement present) = 0.75 (Table 17.5.3b)

Anchor capacity = $\phi N_{cbg} = 0.75 \times 107 = 80.3$ kips > 59.6 kips **OK**

@seismicisolation

Pullout Strength of the Anchor in Tension (Crushing of Concrete Under Head) (N_{pn})

$N_{pn} = \Psi_{c,P} N_p$ (17.6.3.1)

$\Psi_{c,P}$ = Pullout cracking factor. Assume that there is cracking at service loads, $\Psi_{c,P} = 1.0$ (17.6.3.3.1b)

N_p = Basic single-anchor pullout strength $= 8A_{brg}\, f_c'$ (17.6.3.2.2a)

$A_{brg} = 2.237$ in.^{2} for 1 ¼ in. dia Heavy Hex nut

$N_p = 8(2.237)(4{,}000) = 71.6$ kips

$N_{pn} = (1)(71.6) = 71.6$ kips for one anchor; 143.2 kips for two anchors

ϕ for concrete pullout $= 0.70$ (Table 17.5.3c)

Anchor capacity $= \phi N_{pn} = 0.70 \times 143.2 = 100.2$ kips > 59.6 kips **OK**

Concrete Side-Face Blowout Strength of Headed Anchor in Tension (N_{sb})

For side-face blowout, the unmodified h_{ef} is used because the modified h_{ef} is applicable only for Sections 17.6.2.1 through 17.6.2.4. Side-face blowout is in 17.6.4; therefore, use $h_{ef} = 16$ in. (17.6.2.1.2)

The minimum edge distance c_{a1} is 14 in.

$h_{ef} > 2.5\, c_{a1}$? $16 > 2.5(14)$ $16 > 35$ **No**

Therefore, side-face blowout does not apply. (16.6.4.2)

Check the Pedestal for Friction Transferred from the Base Plate

Note: It is assumed that the point where the shear load is transferred to the pedestal via friction is at the center of the compression flange of the column. For very thick base plates, this point could be nearer to the front edge of the base plate. The design engineer should make this determination.

$c_{a1} = 20$ in. $+ X = 20$ in. $+ 4.29$ in. $= 24.29$ in.

$c_{a2} = 12$ in.

$A_{Vc} = 1.5(c_{a1}) \times 44$ in. $= 1.5 \times 24.29 \times 44 = 1{,}603$ in.^{2} (Figure R17.7.2.1b)

$A_{Vco} = 4.5(c_{a1})^2 = 4.5 \times (23.71)^2 = 2{,}530$ in.^{2} (17.7.2.1.3)

$V_{cbg} = (A_{Vc}/A_{Vco})\Psi_{ec,V}\Psi_{ed,V}\Psi_{c,v}\Psi_{h,V}V_b$ (17.7.2.1b)

$\Psi_{ec,V}$ = Modification factor for eccentricity. There is no eccentricity; therefore, $\Psi_{ec,V} = 1$. (17.7.2.3.1)

$\Psi_{ed,V}$ = Breakout edge effect factor, $c_{a2} = 12$ in. $< 1.5\, c_{a1} = 1.5(24.29) = 36.4$ in.; therefore, use Equation (17.7.2.4.1b)

@seismicisolation

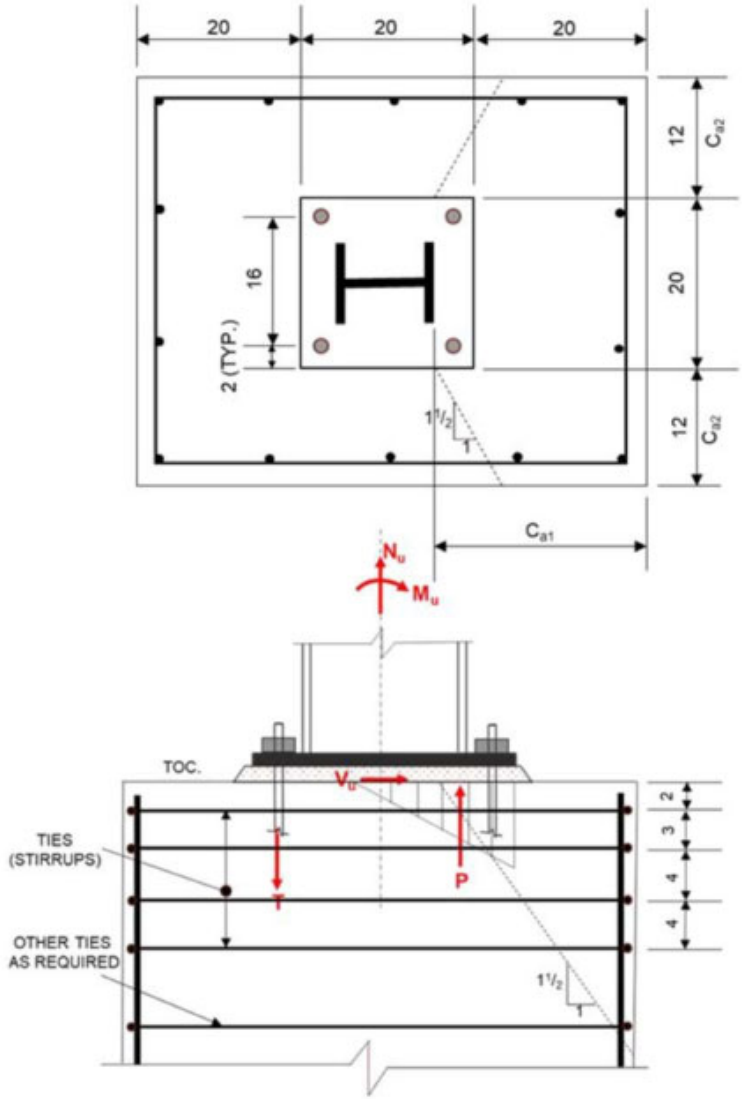

(Dimensions are in inches)

Example 1 Sketch 3

$$\Psi_{ed,V} = 0.7 + 0.3\,(c_{a2}/(1.5(c_{a1})) = 0.7 + 0.3(12/36.4) = 0.80$$

$\Psi_{c,V}$ = Breakout cracking factor, modification factor for the influence of cracking in anchor regions at service load levels. The pedestal reinforcement meets the requirements for $\Psi_{c,V} = 1.4$ according to Table 17.7.2.5.1. $\Psi_{c,V} = 1.4$ (17.7.2.5)

$\Psi_{h,V}$ = Breakout thickness factor. This applies when h_{a1}, the thickness of the member in which the anchor is located, measured parallel to the anchor axis,

@seismicisolation

h_{a1}, is less than 1.5 c_{a1}. For a pedestal on a slab foundation, h_{a1} would be the height of the pedestal plus the thickness of the slab. This would obviously be greater than 1.5 c_{a1}. $\Psi_{h,V} = 1.0$. (17.7.2.6.1 and definition of h_{a1} in 2.2)

V_b = Basic concrete breakout strength. The applicable equation is 17.7.2.2.1b, because there is no anchor in shear.

$$V_b = 9\lambda_a(f_c')^{1/2}(c_{a1})^{1.5} = 9(1)(4{,}000)^{1/2}(24.29)^{1.5} = 68{,}136 \text{ lbf} = 68.1 \text{ kips} \quad (17.7.2.2.1b)$$

$V_{cbg} = (1{,}603/2{,}530)(1)(0.80)(1.4)(1)(68.1 \text{ kips}) = 48.3$ kips

ϕ for shear (concrete breakout) = 0.75

(Supplementary reinforcement provided) (Table 17.5.3b)

Pedestal capacity for shear breakout $= \phi V_{cbg} = 0.75 \times 48.3$

$= 36.2 \text{ kips} > 10.0 \text{ kips}$ **OK**

Concrete Pryout Strength of Anchors in Shear, V_{cpg}

No need to check this because anchors are not in shear. (17.7.3)

Tension and Shear Interaction (17.8)

$N_{ua}/(\phi N_n) \leq 0.2$ (17.8.2a)

$N_{ua} = T/2 = 59.6 \text{ kips}/2 = 29.8$ kips (one anchor)

$\phi N_n = \phi N_{cbg}/2 = 80.3 \text{ kips}/2 = 40.15$ (one anchor)

$N_{ua}/(\phi N_n) = 29.8/40.15 = 0.74 > 0.2$

$V_{ua}/(\phi V_n) \leq 0.2$ (17.8.2b)

$V_{ua} = V_u/2 = 10 \text{ kips}/2 = 5$ kips (half pedestal)

$\phi V_n = \phi V_{cbg}/2 = 36.2 \text{ kips}/2 = 18.1$ kips (half pedestal)

$V_{ua}/(\phi V_n) = 5/18.1 = 0.28 > 0.2$

Therefore, Equation (17.8.3) must be used.

$N_{ua}/(\phi N_n) + V_{ua}/(\phi V_n) \leq 1.2$ (17.8.3)

$N_{ua}/(\phi N_n) + V_{ua}/(\phi V_n) = 0.74 + 0.28 = 1.02 < 1.2$ **OK**

Note: Equation (17.8.3) is a simplification of the equation shown in Figure R17.8. If the Figure R17.8 equation is used, the result will be

$(N_{ua}/(\phi N_n))^{5/3} + (V_{ua}/(\phi V_n))^{5/3} = (0.74)^{5/3} + (0.28)^{5/3} = 0.72 < 1.0$ **OK**

This allows substantially larger capacities and can be used if required to justify higher loads without changing the design.

@seismicisolation

Comments

1. This is a very large pedestal. To make it smaller, reinforcing can be added and designed to transfer the loads from the anchors to the foundation, thus eliminating the need to check the breakout strength of the concrete (Examples 2 and 6).
2. The pullout strength here does not cause any problems. However, if loads close to the tensile capacity of the anchors are required, or if ductility is required, anchor plates, as discussed in Chapter 3, Section 3.13 of this book, should be considered.

EXAMPLE 2: ANCHOR DESIGN FOR COLUMN PEDESTALS

(Tension and Shear Reinforcement Considered)
Note: All references are to ACI 318-19 unless otherwise noted.

Design the anchor for the steel column located at the top of concrete pedestals shown in Sketch 1. Anchors resist tension and shear forces.

Maximum Total Factored Loads (According to Section 5.3 of ACI 318-19 and Section 2.3 of ASCE/SEI 7-16)

Tension: $N_u = 80$ kip

Maximum shear in the X-direction: $V_{u_x} = 20$ kip

Maximum shear in the Y-direction: $V_{u_y} = 20$ kip

Assumptions

1. For new pedestal design.
2. Untorqued, cast-in anchors.
3. No sleeve is used.
4. Low seismic risk and ductile design are not considered (Seismic Design Category A or B according to Chapter 11 of ASCE/SEI 7-16) (ASCE 2017).
5. Tension force is distributed equally among all anchors.
6. Washers are welded to the base plate to transfer the load to the anchor. However, to be conservative, it is assumed that only two anchors resist shear.
7. Shears in the X-direction and the Y-direction do not act simultaneously.

@seismicisolation

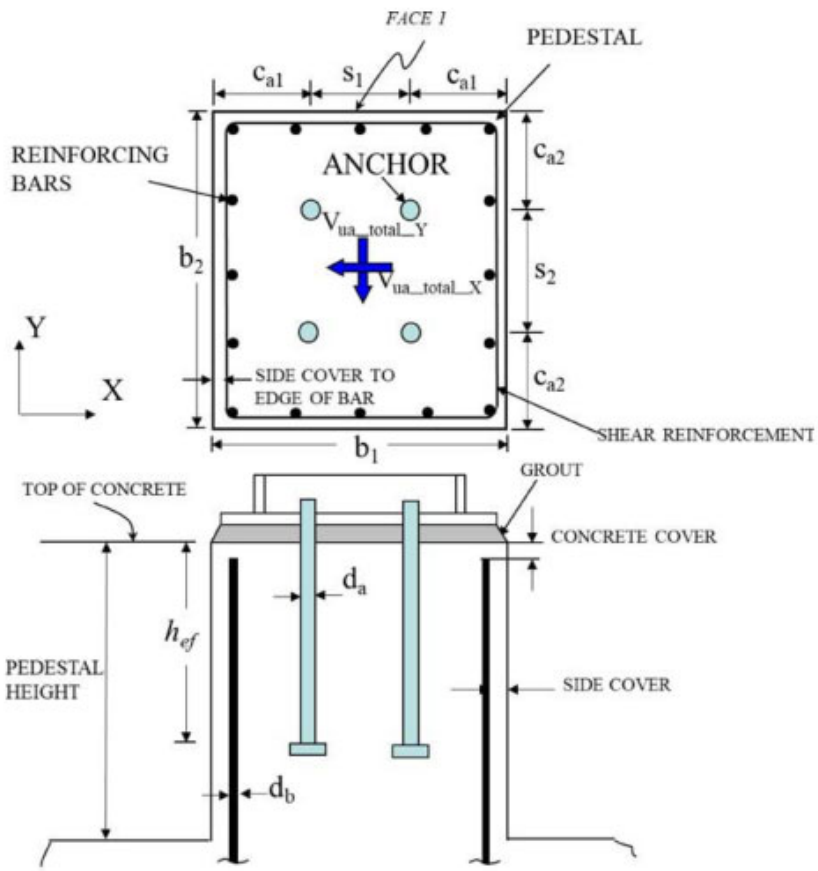

Example 2 Sketch 1

Pedestal Data

Specified compressive strength on concrete: $f'_c = 4{,}000$ psi (*input data are underlined*)

Height: Pedestal_height = 28 in. Vertical dowel concrete cover: Concrete_cover = 1.5 in.

Vertical dowel concrete side cover: Side_cover = 2 in.

Note: In many cases, the height of the pedestal is a design constraint.

Cross-sectional dimensions:	$b_1 = 24$ in.	$b_2 = 24$ in.
Edge distance:	$c_{a1} = 8$ in.	$c_{a2} = 8$ in.
Anchor spacing:	$s_1 = 8$ in.	$s_2 = 8$ in.

@seismicisolation

Anchors

Specification: ASTM F1554 Grade 36 $\underline{f_{ya} = 36 \text{ ksi}}$ $\underline{f_{uta} = 58 \text{ ksi}}$

ASTM F1554 Grade 36 is a ductile steel (see Chapter 2, Table 2.1 of this book).

Therefore, $\Phi_T = 0.75$ (tension loads) $\Phi_V = 0.65$ (shear loads) (Table 17.5.3.a)

Note: Load combinations should be according to Chapter 5 of ACI 318-19 or Chapter 2 of ASCE 7-16.

Reinforcing Bars

Grade 60 steel:	$f_y = 60$ ksi	
Vertical (longitudinal rebars): No. 6	$d_b = 0.75$ in.	$A_s = 0.44$ in.^{2}
Shear reinforcement: No. 4	$d_{tie} = 0.5$ in.	$A_{s_tie} = 0.2$ in.^{2}

Design Assumptions

1. The tension and the shear forces in the anchors are transferred to the longitudinal rebars and shear reinforcement, respectively, which will be designed as anchor reinforcement. Therefore, the concrete breakout strength in tension and shear (17.6.2 and 17.7.2) is not checked. The concrete pryout strength in shear (17.7.3) is assumed OK by inspection because it is usually critical for short and stiff anchors.
2. Because the welded washers are used (i.e., anchors are welded to a common plate), only the two back anchors are assumed to carry shear (Figure R17.7.2.1b, Case 2).

Design Steps

Determine Size of Anchors

The size of anchors is determined on the basis of the steel strength of the anchor in tension and shear. Because the tension force is assumed to be distributed equally, each anchor carries 80 kip/4 = 20 kip. Two anchors are there in both *X*- and *Y*-directions (i.e., half of the total number of anchors) that are effective in resisting shear; the maximum shear force carried by one anchor is 20 kip/2 = 10 kip. If there is any shear in the other orthogonal direction acting simultaneously, it should be added vectorially here.

Try a 1.25-in. anchor: $d_a = 1.25$ in. (threads per inch: $n_t = 8$)

Effective cross-sectional area: $A_{se_N} = \frac{\pi}{4}\left(d_a - \frac{0.9743 \text{ in.}}{n_t}\right)^2$

[Refernce: ANSI/ASME B1.1, "Unified Inch Screw Threads (UN and UNR Thread Form)," ASME, 2003] (ANSI 2019)

$A_{se_N} = 1$ in.^{2}, $A_{se_V} = A_{se_N}$

@seismicisolation

The steel strength of one anchor in tension: $N_{sa} = A_{se_N} \times f_{uta}$ (17.6.1.2)

$$\Phi_T \times N_{sa} = (0.75)(1)(58)$$

$$\Phi_T \times N_{sa} = 43.5 \text{ kip} > N_{ua} = 20 \text{ kip (OK)}$$

The steel strength of one anchor in shear: $V_{sa} = 0.8 \times 0.6A_{se_V} \times f_{uta}$ (17.7.1.2b)

$$\Phi_V \times V_{sa} = (0.65)(0.8)(0.6)(1)(58)$$

$$\Phi_V \times V_{sa} = 18.1 \text{ kip} > V_{ua} = 10 \text{ kip (OK)}$$

Note: The shear strength of anchors with a base plate supported on grout pads shall be multiplied by 0.8 (17.7.1.2.1).

Because $N_{ua} > 0.2\Phi_T N_{sa}$ and $V_{ua} > 0.2\Phi_V V_{sa}$, check the interaction equation (17.8.3)

$$\frac{N_{ua}}{\Phi_T N_{sa}} + \frac{V_{ua}}{\Phi_V V_{sa}} = 1.01 \qquad <1.2 \text{ (OK)}.$$

The recommended minimum embedment depth of the nonsleeve 1.25 in. anchor according to Chapter 3, Section 3.2.2 of this book: $h_{ef,\min} = 12d_a = 15$ in.

Note: Because the pedestal height is 28 in., **try $\mathbf{h_{ef} = 24}$ in.** This effective embedment depth will be checked to determine if it is sufficient for the required development length of the vertical reinforcing bars.

Check the Pullout Resistance of Anchor in Tension (17.6.3.2.2)

Section 17.6.3.2.2 indicates the load at which the concrete above the anchor head begins to crush. Because the local crushing above the head will greatly reduce the stiffness of the connection, and usually will be the beginning of a pullout failure, the pullout resistance of the anchor in tension must be ensured to be larger than the factored tension load (N_{ua}).

If the ductile design (which is not considered herein) is performed, the pullout resistance of the anchor in tension should be larger than the tensile capacity of the anchor ($\Phi_T N_{sa}$).

Use heavy hex nut (on the anchor head) with the flat-to-flat dimension of 2 in.

Net bearing area: $A_{brg} = 0.866 \times 2^2 - \frac{\pi}{4} \times 1.25^2$, $A_{brg} = 2.237$ in.^{2}

The pullout resistance in the tension of a single-headed bolt:

$N_{pn} = \psi_{c_P} 8 A_{brg} f'_c$ (17.6.3.1 and 17.6.3.2)

Assume that the concrete cracks $\psi_{c_P} = 1$ (17.6.3.3.1), $N_{pn} = (1)8(2.237)(4) = 71.6$ kip

Strength reduction factor for an anchor governed by pullout is 0.70 ($\Phi = 0.7$, Table 17.5.3c).

Therefore, $\Phi N_{pn} = (0.7)(71.6) = 50.1 \text{ kip} > N_{ua} = 20 \text{ kip (OK)}$.

@seismicisolation

Check the Side-Face Blowout Resistance of the Anchor in Tension (17.6.4)

Because of symmetry, only side-face blowout resistance on one face of the pedestal needs to be considered.

Strength reduction factor for an anchor governed by side-face blowout, assuming that supplementary reinforcement is provided to tie the failure prism: $\Phi = 0.75$ (Table 17.5.3b)

Check if the corner effect (for the corner anchor) and close spacing (for the group of anchors) need to be considered:

Corner fffect: $c_{a2} < 3c_{a1} \rightarrow$ Consider the corner effect.

$$N_{sb} = 160 \times c_{a1} \times \sqrt{A_{brg}} \times \sqrt{f'_c} \times \frac{1 + (c_{a2}/c_{a1})}{4} \qquad (17.6.4.1,\ \lambda = 1)$$

$$N_{sb} = 160(8)\left(\sqrt{2.237}\,\frac{\sqrt{4{,}000}}{1{,}000}\,\frac{1+(1)}{4}\right) = 60.5$$

$N_{sb} = 60.5$ kip $> N_{sa} = 58$ kip (OK)

Although it is not required when ductile design is not performed, it is a good practice to have $N_{sb} > N_{sa}$ so that the failure is not governed by a nonductile side-face blowout failure.

$\Phi N_{sb} = (0.75)(60.5) = 45.4$ kip $> N_{ua} = 20$ kip (OK)

Close spacing effect: $s_1 < 6c_{a1} \rightarrow$ consider close spacing

$$N_{sbg} = \left(1 + \frac{s_1}{6c_{a1}}\right)N_{sb}\ (17.6.4.2), \quad N_{sbg} = 70.58 \text{ kip}$$

This N_{sbg} is for the two anchors located on one face of the pedestal.

$\Phi N_{sbg} = (0.75)(70.58) = 52.9$ kip $> 2N_{ua} = 2(20) = 40$ kip (OK)

TRANSFER OF ANCHOR LOAD TO VERTICAL REBARS

Amount of Vertical Reinforcing Steel

It is prudent and a good practice to place anchor reinforcement as close as practical to the anchor (Chapter 3, Section 3.5.3.1.1 of this book). In this example, to be considered effective for resisting anchor tension, vertical reinforcing steel must be located within:

$h_{ef}/3 = 24/3 = 8$ in. from the edge of the anchor head or bearing plate.

The number of pedestal vertical rebars that are effective for resisting anchor tension is 3 (Sketch 2).

@seismicisolation

Determine the required number of vertical rebars to resist $N_{ua} = 20$ kip: *Note: Ductile design is not considered (low seismic risk).*

Use No. 6 bars, $A_s = 0.44$ in.^{2}

$$n_\text{required} = \frac{N_{ua}}{\Phi_s f_y A_s} \quad \text{For anchor reinforcement design, } \Phi_s = 0.75 \qquad (17.5.3).$$

$$n_\text{required} = \frac{20}{(0.75)(60)(0.44)} = 1.0 < \text{provided effective number of rebars (OK)}$$

Note: Often for a new design, vertical reinforcing is designed to develop the full steel capacity of the anchor to provide for potential loading in excess of current design loading and/or to provide the capacity for a ductile design in the future.

Development Length

The vertical rebar should be developed on either side of the potential failure plane. The part of the rebar above the failure surface is commonly straight, and the part of the rebar that goes into the mat is commonly terminated with a 90-degree hook (as shown in Sketch 2). Therefore, the straight-bar development length applies to the part of the rebar above the failure surface, and the 90-degree hooked bar development length applies to the part of the rebar below the failure surface, excluding the portion between the failure surface and the construction joint at the base of the pedestal.

Because the development length for the 90-degree hooked bar (below the failure surface) is part of the pedestal/foundation design, it is not considered in this calculation.

Development Length for Straight Bars Above the Failure Surface

The minimum development length, l_d ($\geq$ 12 in.), is determined on the basis of Sections 25.4.2.3 and 25.4.2.5 of ACI 318-19 (ACI 2019) as follows:

Bar location factor: $\psi_t = 1$ (for vertical bar)

Coating factor: $\psi_e = 1$ (for uncoated bar)

Concrete density factor: $\lambda = 1$ (for normal concrete)

Rebar grade factor: $\psi_g = 1$ (for Grade 60 reinforcement)

For No. 6 and smaller bars, use: $l_d = \left[\dfrac{f_y(\psi_t\psi_e\psi_g)}{25\lambda\sqrt{f_c'}}\right]d_b \quad l_d = 28.5$ in.

Available development length based on the pier height and the embedment depth of the anchor bolt:

$l_{d_\text{available}} = h_{ef} - \text{Concrete Cover} - d_{\text{actual}} \times \tan(35°)$

From Sketch 2, $d_{\text{actual}} = 6.95$ in. $\quad l_{d_\text{available}} = 24 - 1.5 - 6.95\tan(35°) = 17.63$ in. $< l_d$

@seismicisolation

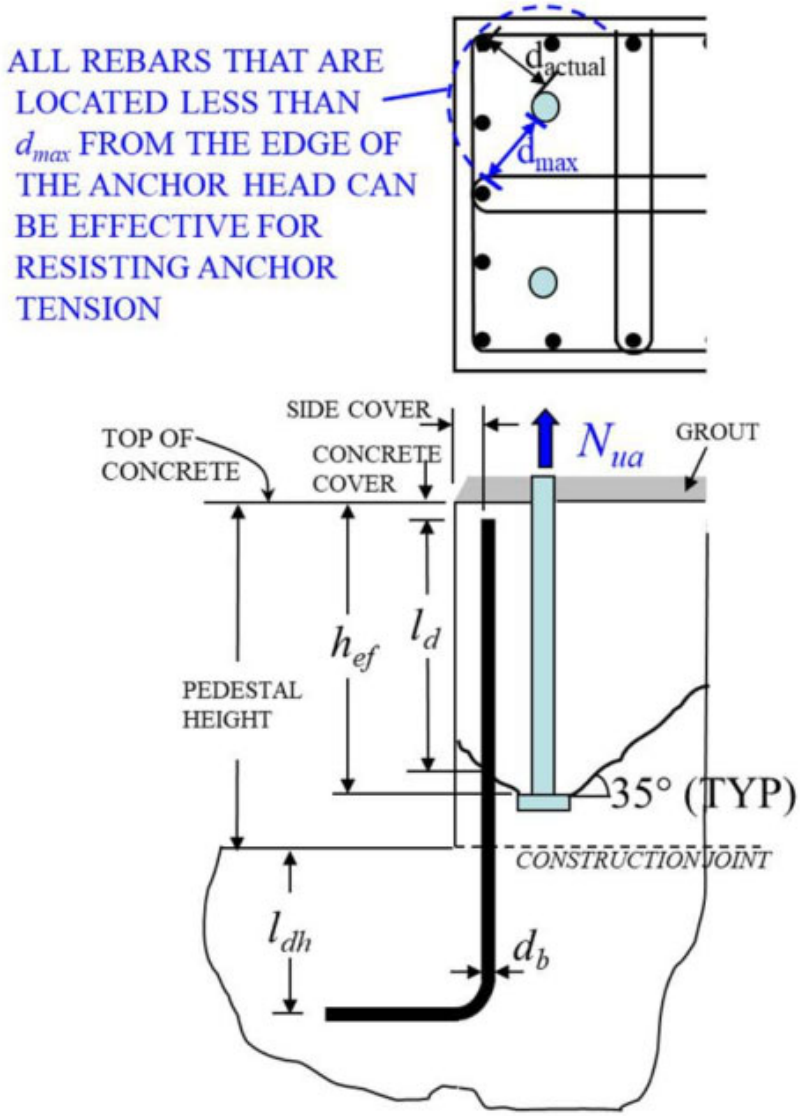

Example 2 Sketch 2

However, because the provided number of effective rebars is significantly more than the required number of rebars and for low seismic risks, l_d can be reduced using the excess reinforcement factor according to Section 25.4.10 (but cannot be less than 12 in. according to Section 25.4.2.1).

$$l_{d_reduced} = l_d \frac{A_{s_required}}{A_{s_provided}} \quad l_{d_reduced} = 28.5 \times \frac{1}{3} = 9.5 \text{ in.} \quad (12 \text{ in. min.})$$

$$l_{d_reduced} = 12 \text{ in.} < l_{d_available} \text{ (OK)}$$

@seismicisolation

Strut-and-Tie Method for Tension Loading (Chapter 3, Section 3.5.3.1.4 of This Book)

Using the STM design approach, it is assumed that the diagonal concrete struts propagate radially from the anchor head. As a result of the diagonal concrete struts, there are radially horizontal force components propagating from the anchor head. In Sketch 3, the resultant of the radial horizontal component propagating from the anchor head is denoted as *F*, which depends on the concrete bearing pressure on the head. Anchor reinforcement in the form of regular transverse ties or hairpins should be designed to carry *F*. Because most of the action occurs at the bearing surface of the anchor head, it is recommended that the anchor reinforcement be placed as closely as possible to the bearing surface of the anchor head.

Bearing pressure at the anchor head: $p = 20\ \text{kip}/A_{brg}$, $p = 9.94$ ksi

Section 3.5.3.1.3 of this book:

$$\alpha = \max\left(0.25,\ 0.10\sqrt{\frac{p}{f'_c}},\ 0.037\frac{p}{f'_c}\right), \quad \alpha = 0.25$$

$$F = \alpha \times 20\ \text{kip}$$

$$F = 5\ \text{kip}$$

Assuming that the ties will be fully developed, the required number of layers of No. 4 ties to resist *F* is

$$n_\text{layers} = \frac{F}{\Phi_s A_{s_\text{tie}} f_y}, \quad n_\text{layers} = 0.56.$$

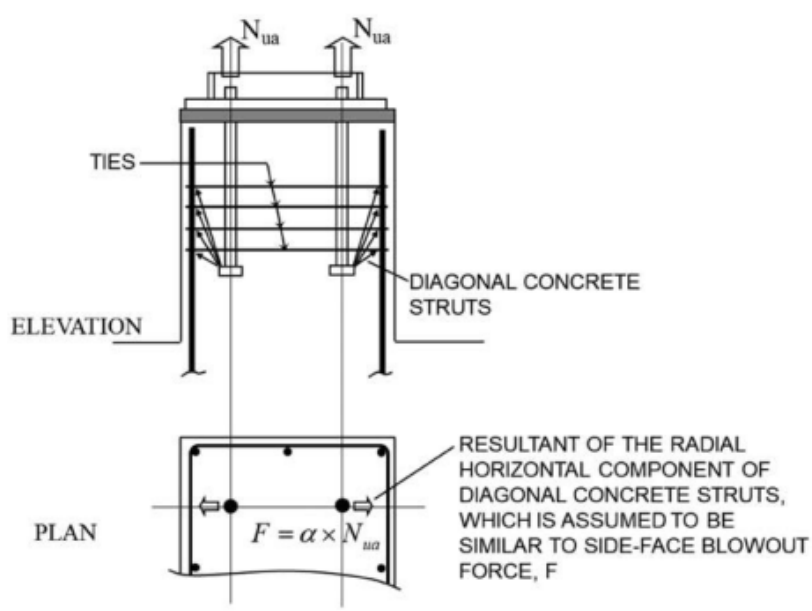

Example 2 Sketch 3

@seismicisolation

Therefore, one layer of tie is required to be placed as close to the bearing surface of the anchor head as possible.

Herein, because the available area for nodes and struts is assumed to be sufficiently large, the STM for tension loading is used only to proportion ties (i.e., vertical reinforcing bars and horizontal ties) based on the overall equilibrium of the system. Based on vertical force equilibrium, the vertical reinforcing bars should be proportioned to carry the total tension force N_{ua_total} in the pedestal (i.e., Section 4.1 of this example problem).

DESIGN OF SHEAR REINFORCEMENT

Use the Concept of Concrete Breakout Cone

Calculate the available development length l_{da}:

Layer A: $l_{da_A_L} = 13.1$ in. $l_{da_A_R} = 7.9$ in. Layer B: $l_{da_B_L} = 11$ in. $l_{da_B_R} = 10$ in.

The required hooked development length to fully develop the ties:

$$l_{dh} = \frac{\psi_e \psi_r \psi_o \psi_c f_y}{55\lambda\sqrt{f_c'}} d_{\text{tie}}^{1.5} \tag{25.4.3.1}$$

$\psi_e = 1.0$ $\psi_r = 1.6$ $\psi_o = 1.25$ $\psi_c = 0.867$ $l_{dh} = 10.6$ in.

Note: This approach is conservative, considering that typical shear reinforcement design for columns assumes that the shear reinforcement can be fully developed when closed ties are used. In this example, the maximum steel stress is calculated on the basis of the ratio between the available development length and the required hooked development length to fully develop the ties.

To simplify the problem, the minimum l_{da} is used.

The steel stress based on the minimum l_{da}: $f_s = \dfrac{\min(l_{da_A_L}, l_{da_A_R}, l_{da_B_L}, l_{da_B_R}}{l_{dh}}$

$f_s = 44.717$ ksi

Required area of ties: $A_{\text{tie_required}} = \dfrac{V_{u_x}}{0.75 f_s}$ $A_{\text{tie_required}} = 0.596$ in.^{2}

Requires three legs of No. 4 tie: 3×0.20 in.^{2}/tie $= 0.60$ in.$^2 > 0.596$ in.^{2}

Use two layers of No. 4 tie as shown in Sketch 4.

Use the Concept of Strut-and-Tie Method Approach (Chapter 3, Section 3.5.3.2.2 of This Book)

Assumptions

1. Strut-and-tie modeling (Sketch 5) is used to analyze shear transfer to the concrete pedestal and to design the required amount of shear reinforcement.

@seismicisolation

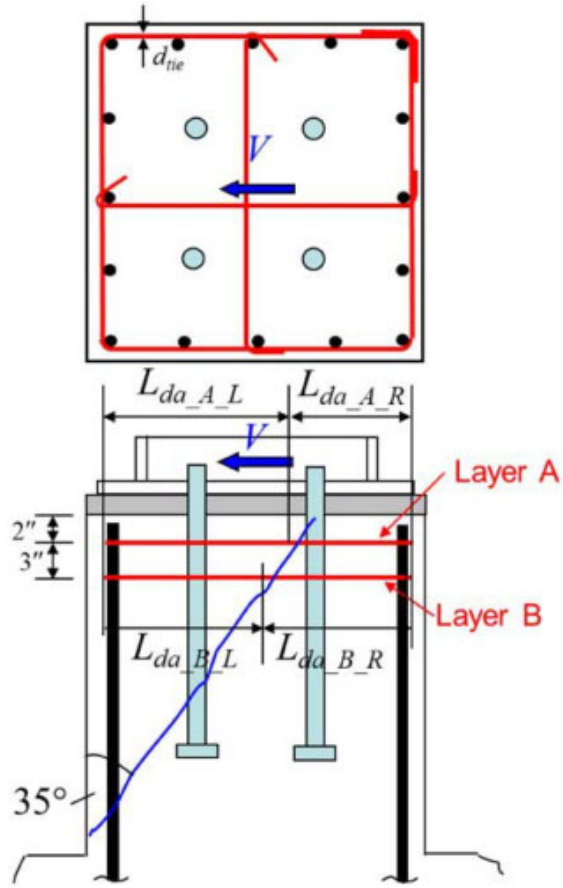

Example 2 Sketch 4

2. Because the shear forces in both directions are the same and the total number of anchors resisting the total shear forces in both directions are the same, only the shear in the *X*-direction is presented in this example problem.

In this example, the strut-and-tie model that requires internal ties (i.e., T2) is used. As explained in Chapter 3, Section 3.5.3.2.2, the strut-and-tie model that does not require internal ties can also be used. However, when internal ties are not provided, the exterior ties (i.e., T1) will be heavier.

Check a Geometry of the Truss Model to See If a Direct Strut Can Develop

Because the angles between the axes of all struts and ties entering a single node are larger than 25 degrees, direct struts can develop (23.2.7).

Develop a Truss Model and Calculate Member Forces

The truss model and member forces are shown in Sketch 5.

@seismicisolation

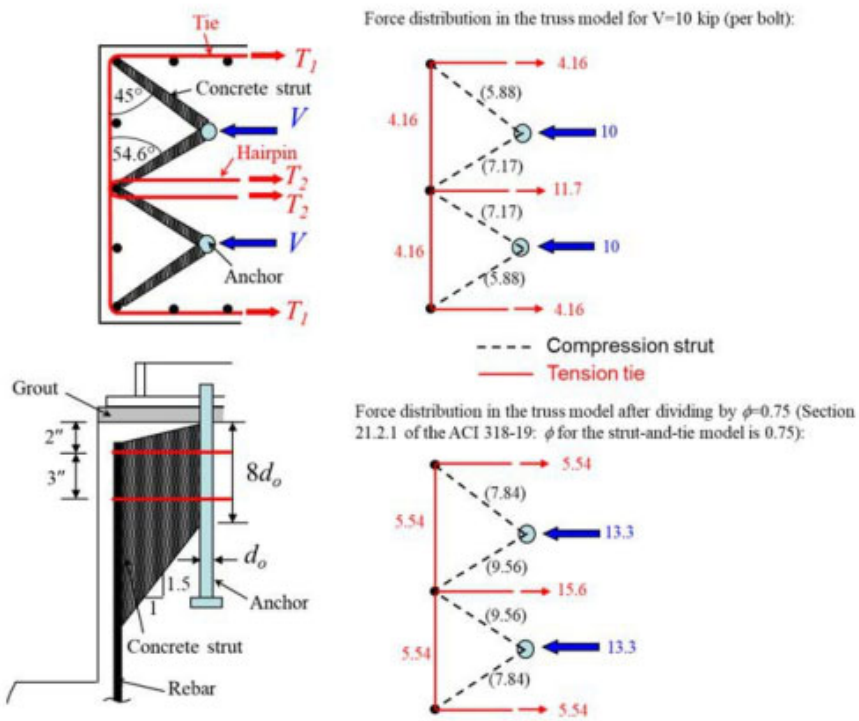

Example 2 Sketch 5

Check the Strength of the Bearing

Assume that the concrete strength for checking the strength of the bearing and compression struts is $f_{ce} = 0.85\ f_c'$ (assuming "boundary struts" according to Section 23.4.3).

Bearing of the Anchor

Bearing area: $A_{\text{bearing_anc}} = 8d_a d_a$

$A_{\text{bearing_anc}} = 12.5\ \text{in.}^2$

Strength: $f_{ce} = 0.85\ f_c'$

$$f_{ce} = 3{,}400\ \text{psi} > \frac{13.3\ \text{kip}}{A_{\text{bearing_anc}}} = 1{,}064\ \text{psi (OK)}$$

Bearing of the Reinforcing Bars

On inspection, the bearing on the rebar at node D (Sketch 6) governs a larger force:

The clear distance between nodes B and D, l_{BD}: $l_{BD} = \sqrt{(5.625\ \text{in.})^2 + (4\ \text{in.})^2} - \frac{d_a}{2} - \frac{d_b}{2}$

$l_{BD} = 5.902\ \text{in.}$

@seismicisolation

Bearing area (Sketch 5): $A_{\text{bearing_rebar}} = (8d_a + 1.5l_{\text{BD}} - \text{Concrete_cover})d_b$

$A_{\text{bearing_rebar}} = 13.02 \text{ in.}^2$

Although the tension ties are present only at the location of the shear reinforcement, the strength of the nodal zone anchoring two or more ties according to Section 23.9.2 is conservatively used.

$\beta_n = 0.6, \quad \beta_c = 1.0$

Strength: $f_{ce} = 0.85\,\beta_c\beta_n f_c'$ [Equation (23.9.2)]

$$f_{ce} = 2{,}040 \text{ psi} > \frac{9.56 \text{ kip}}{A_{\text{bearing_rebar}}} = 735 \text{ psi (OK)}$$

Check the Strength of Struts

Because it is assumed that the strength of the strut is the same as the bearing strength ($f_{ce} = 0.85\,\beta_c\beta_n f_c'$) and the available area for struts is typically larger than the available area for bearing, the bearing strength governs over the strength of struts. Therefore, if the bearing strengths at the anchor and rebar are OK, the strength of the struts does not need to be checked.

Select Tie Reinforcement

Assumptions (Chapter 3, Section 3.5.3.2.2 of this book)

1. Only the topmost two layers of ties (within 5 in. of pedestal as required by Section 10.7.6.1.5), shown in Sketch 7, are effective. Ties will need to be installed as close as possible to the top of the pedestal, while still satisfying the minimum cover requirements.
2. Tie reinforcement consists of ties with seismic hooks. Hairpins are used as internal ties.

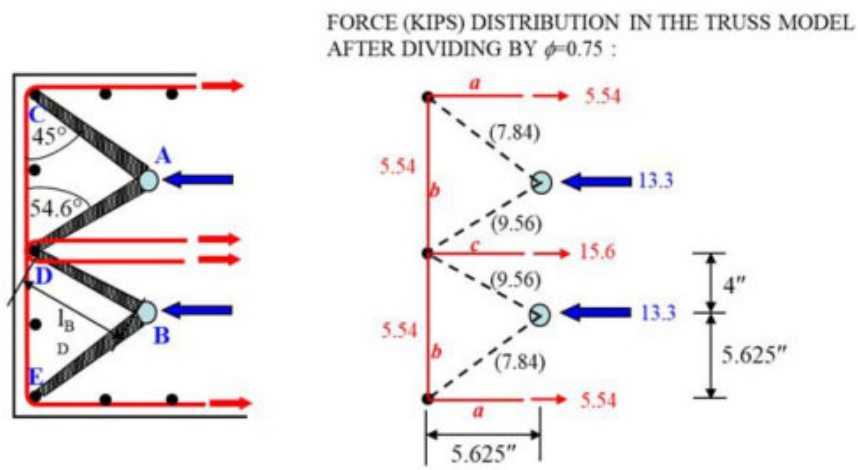

Example 2 Sketch 6

@seismicisolation

3. The location of hooks and the direction of hairpins are alternated, as shown in Sketch 7.
4. At the nodes away from the hook (e.g., Node 6 on Layer A), the tie is assumed to be fully developed.
5. At the node where the hook is located (e.g., Node 6 on Layer B), the contribution of the hook to the exterior tension ties, T_{hook}, is $T_{hook} = A_{s_tie} \times (20 \text{ ksi}) = 4$ kip.

Note: The required one layer of tie very close to the bearing surface of the anchor head (from Section 4.3 of this calculation) is not shown in Sketch 7.

Ties a and b (Sketch 6):

Ties a and b are resisted by exterior ties.

Assuming that one layer of the exterior tie can develop f_y and the other layer can provide T_{hook}:

Total resistance: $R_{tot_ab} = A_{s_tie} \times f_y + T_{hook}$

$$R_{tot_ab} = 16 \text{ kip} > 5.54 \text{ kip (OK)}$$

Tie c (Sketch 6):

Tie c is resisted by a hairpin.

Diameter of a hairpin: $d_{hairpin} = 0.5$ in., $A_{s_hairpin} = (\pi / 4)\, d_{hairpin}^{\,2}$

Yield stress of a hairpin: $f_{y_hairpin} = 60$ ksi

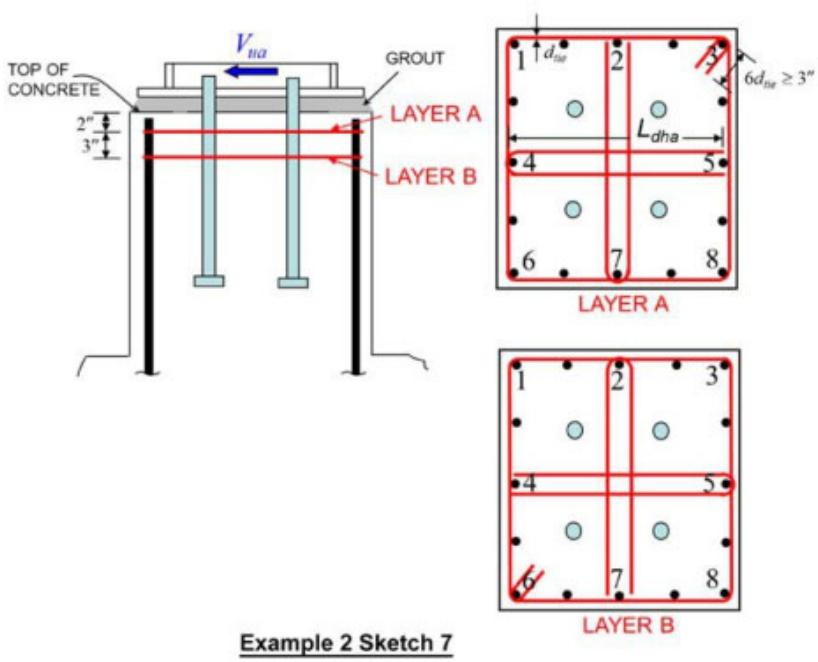

Example 2 Sketch 7

@seismicisolation

Check the stress that can be developed in the hairpin:

Check the available length of the hairpin: $l_{dha} = 24$ in. – 2 Side_cover – $2d_{tie}$

$$l_{dha} = 19 \text{ in.}$$

Required straight development length for a fully developed hairpin:

Bar location factor: $\psi_t = 1.3$

Coating factor: $\psi_e = 1.0$ (for uncoated bar)

Concrete density factor: $\lambda = 1.0$ (for normal concrete)

Rebar grade factor: $\psi_g = 1.0$ (for Grade 60 rebar)

For No. 6 and smaller bars, use $l_{d_hairpin} = (f_y(\psi_t\psi_e\psi_g)/25\lambda\sqrt{f'_c})d_{hairpin}$

$l_{d_hairpin} = 24.7$ in. cannot be less than 12 in. according to Section 25.4.2.1

The stress that can be developed in the hairpin:

$$f_{s_hairpin} = \frac{l_{dha}}{l_{d_hairpin}} f_{y_hairpin}, \quad f_{s_hairpin} = 46.15 \text{ ksi}$$

Because the direction of the hairpin is alternated, only one layer of hairpin can be accounted as tie reinforcement.

Total resistance: $R_{tot_c} = 2A_{s_hairpin}f_{s_hairpin}$ (*Note*: 2 legs per hairpin)

$$R_{tot_c} = 18.1 \text{ kip} > 15.6 \text{ kip (OK)}$$

Check the minimum distance requirements to preclude splitting failure

The following minimum distances for anchors shall be satisfied unless reinforcement is provided to control splitting.

1 Center-to-center spacing (17.9.2): $s_{min_untorqued} = 4d_a = 5$ in. $< \min(s_1,s_2)$ (OK)

2. Minimum edge distance (17.9.2):

For untorqued cast-in anchors, the minimum edge distances shall be based on minimum cover requirements for reinforcement specified in Section 20.5.1.3.

$C_{min_untorqued} = \text{cover} = 1.5$ in. $< \min(c_{a1},c_{a2})$ (OK)

EXAMPLE 3: ANCHOR DESIGN FOR OCTAGONAL PEDESTAL

Note: All references are to ACI 318-19 unless otherwise noted.

1. **GIVEN** *(input data are underlined)*

   Anchor circle diameter (D_{bc}): <u>144 in.</u>

   Anchors: 12 Qty 1 1/2 in. Dia. with heavy hex nuts

@seismicisolation

Materials: ASTM F1554 Grade 36

$f_c' = \underline{4{,}000 \text{ psi}}$ $w_c = \underline{135 \text{ pcf}}$

Face to face of pedestal (D_p): 13.28 ft

No supplementary reinforcement is provided.

Wind loads (strength level)

M_u: 1,328 k-ft

V_u: 44 kips

Earthquake loads (operating-strength level)

M_u: 600 kip-ft

V_u: 20 kips

E_v: 9 kips

Seismic Design Category: B

Vessel weights (unfactored)

Empty weight, W_e: 98 kips

Operating weight W_o: 240 kips

REQUIRED:

Check the adequacy of anchorage for the given loads.

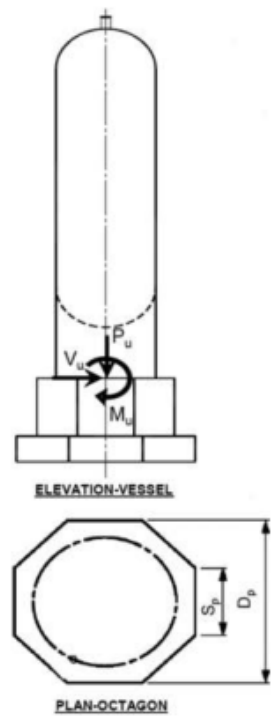

2. Anchor General Information

Anchor length, $L = \underline{2.67 \text{ ft}}$

Grout, $G = \underline{1 \text{ in.}}$

Grip length, $L_g = \underline{10 \text{ in.}}$

Thread length at bottom, $L_t = \underline{2.5 \text{ in.}}$

Nut allowance (two nuts) = 4 in.

Effective embedment length, $h_{ef} = \underline{14.50 \text{ in.}}$

Anchor circle dia., $D_{bc} = \underline{144.00 \text{ in.}}$

Number of anchors, $n_a = \underline{12}$

Effective cross-sectional area, $A_{se,N} = \underline{1.41 \text{ in.}^2}$

Bearing area of head/stud, $A_{brg} = \underline{3.12 \text{ in.}^2}$

Specified tensile strength, $f_{uta} = \underline{58 \text{ ksi}}$

Specified yield stress, $f_{ya} = \underline{36 \text{ ksi}}$

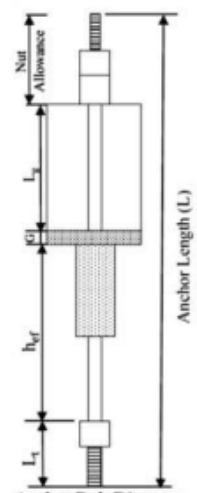

Anchor Bolt Diagram

(Not to scale)

3. Determine the Factored Shear Force applied to Single Anchor (V_{ua}).

(a) Check for Shear owing to Wind under Empty Condition.

@seismicisolation

Empty weight, $W_e = 98$ kips

Factored wind moment, $M_u = 1{,}328$ kip-ft

Factored wind base shear, $V_{ua} = 44$ kips

Factored comp. force, $P_u = M_u/(0.67D_{bc}) + 0.5(0.9W_e)$.

Because of gravity load and couple force from the overturning moment

$P_u = 1{,}328 \times 12/(0.67 \times 144) + 0.5 \times (0.9 \times 98)$.

Thus, $P_u = 209.3$ kips.

Determine if shear is taken 100% by shear friction or 100% by the anchorage.

Friction @ base $V_f = \mu P_u$ where $\mu = 0.4$ (ACI349-13, Section D.6.1.4).

$V_f = 0.4 \times 209.3 = 83.7$ kips.

No supplementary reinforcement is provided; thus, shear $\Phi = 0.70$ (Table 17.5.3b).

$\Phi V_f = 0.7 \times 83.7$.

Thus, $\Phi V_f = 58.6$ kips.

Which is $> V_{ua} = 44$ kips, Thus, there is no shear on the anchors.

(b) Check for Shear owing to Earthquake under Operating Condition.

Given:

Unfactored operating weight, $W_o = 240$ kips

Factored applied EQ moment, $M_u = 600$ kip-ft

Factored applied EQ base shear, $V_{ua} = 20$ kips

$E_v = 9$ kips

Factored comp. force, $P_u = M_u/(0.67D_{bc}) + 0.5(0.9W_o) - E_v/2$.

$P_u = 600 \times 12/(0.67 \times 144) + 0.5 \times (0.9 \times 240) - 9/2$.

$P_u = 178$ kips.

Determine if shear is taken 100% by shear friction or 100% by the anchorage.

Friction @ Base $V_f = \mu P_u$ where $\mu = 0.4$ (ACI349-13, Section D.6.1.4)

$V_f = 0.4 \times 178 = 71.3$ kips.

No supplementary reinforcement is provided; thus, shear $\Phi = 0.70$ (Table 17.5.3b)

$\Phi V_f = 0.7 \times 71.3 = 49.9$ kips.

Which is $> V_{ua} = 20$ kips, Thus, there is no shear on the anchors.

Shear is transferred directly from the vessel base plate to the pedestal by shear friction.

@seismicisolation

4. Determine the Maximum Factored Tensile Load on Single Anchor (N_{ua}).

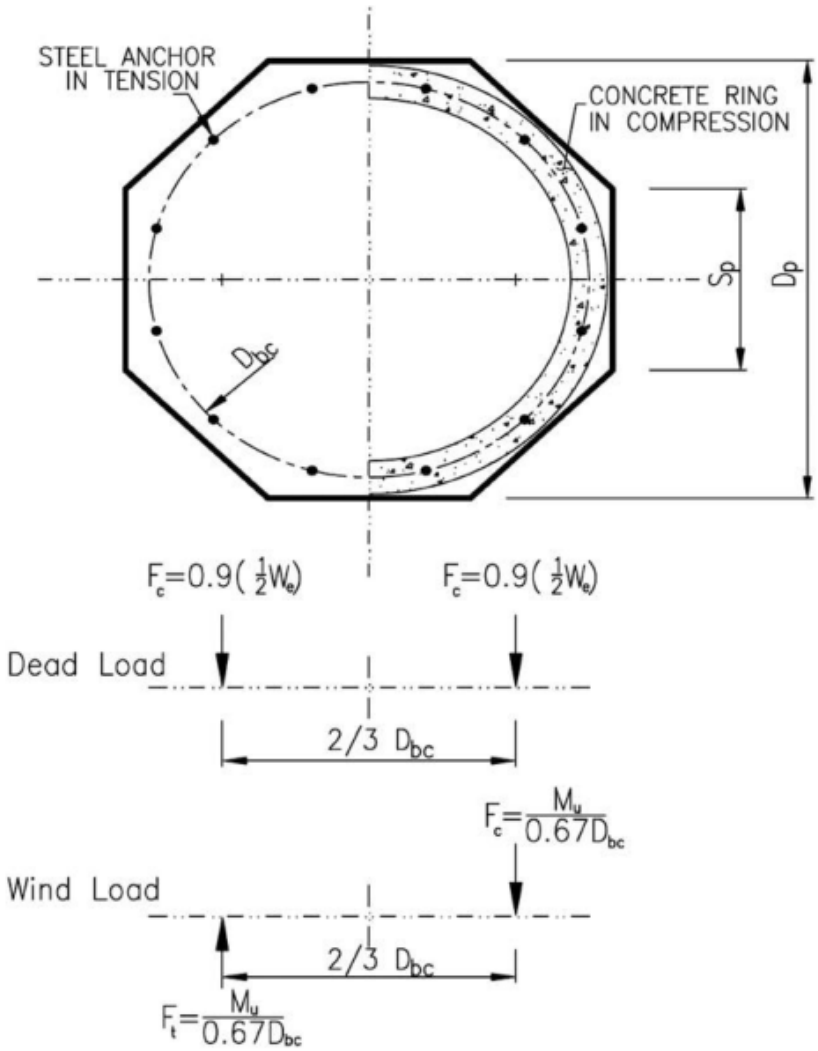

Based on inspection, M_u Wind > M_u EQ; thus, wind load will govern.

Unfactored empty weight, $W_e = 98$ kips.

Factored wind moment, $M_u = 1{,}328$ kip-ft (Strength Level).

Maximum factored tensile loads on the anchors (N_{ua})

$$N_{ua} = \frac{4M_u}{n_a D_{bc}} - \frac{0.9W_e}{n_a}$$ [PIP STE03350 (PIP 2008), Equation (4)].

$N_{ua} = 4 \times 1{,}328 \times 12/(12 \times 44) - 0.9 \times 98/12 = 29.5$ kips.

@seismicisolation

5. **Determining the Strength of Anchorage in Tension and Shear.**

(a) Steel strength for anchor in tension (ΦN_{sa}) (Section 17.6.1)

Supplementary Reinforcement Provided (Condition A)

Tension resistance factor $\Phi = 0.75$ (Section 17.5.3a)

Anchor strength governed by steel

Nominal tensile strength, $N_{sa} = n_a A_{se,N} f_{uta}$ [Equation (17.6.1.2)]

Where $n_a = 1$ for a single anchor

$N_{sa} = 1 \times 1.41 \times 58 = 81.8$ kips.

$\Phi N_{sa} = 0.75 \times 81.8 = 61.3$ kips.

(b) Steel strength for anchor in shear (ΦV_{sa})

Shear is taken 100% by friction, as shown in Part 3.

(c) Concrete breakout strength of a single anchor in tension (ΦN_{cb}) (Section. 17.6.2)

Using the saw-cut method for calculating N_{cb} (Wey et al. 2010); Saw Cut Method—Method 2]

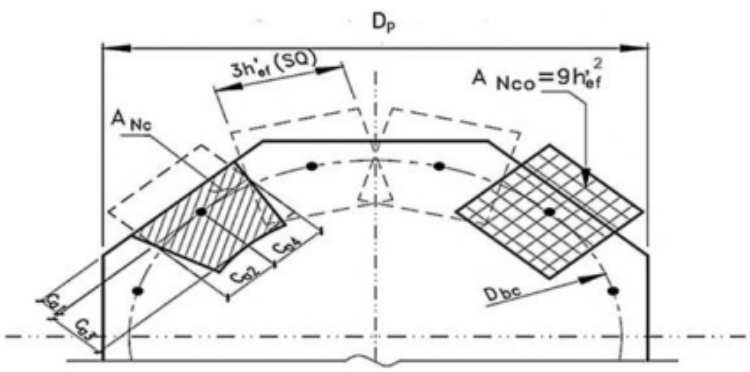

Pedestal side, $S_p = D_p/2.414 = 13.28/2.414 = 5.5$ ft

Pedestal area, $A_p = (0.8284 \times (13.38 \times 12)^2) = 21{,}038$ in.^{2}

Edge distances:

$c_{a1} = (D_p - D_{bc})/2 = (12 \times 13.28 - 144)/2 = 7.68$ in.

$$c_{a2} = \frac{D_{bc}}{2} \tan\left(\frac{360}{2n_a}\right)$$

$c_{a2} = 144/2 \tan(360/(2 \times 12)) = 19.29$ in.

$c_{a4} = c_{a2} = 19.29$ in.

@seismicisolation

Limited Effective Embedment Length, h'_{ef}

All three edges distances are less than $1.5h_{ef}$; therefore,

$c_{a,\max} = \max\ (7.68, 19.29, 19.29) = 19.29$ in.

$h'_{ef} = c_{a,\max}/1.5 = \min\ (14.50, 19.29/1.5) = 12.86$ in. (Section 17.6.2.1.2)

$c_{a3} = \min\ (1.5h'_{ef}, 0.5D_{bc}) = \min\ (1.5 \times 12.86, 0.5 \times 144)$

$c_{a3} = 19.29$ in.

$c_{a,\min} = \min\ (7.68, 19.29, 19.29, 19.29) = 7.68$ in.

Projected concrete failure area, A_{Nco}

$A_{Nco} = 9h'^2_{ef} = 9 \times 12.86^2 = 1{,}489$ in.^{2} [Equation (17.6.2.1.4)]

Effective Concrete Failure Area, A_{Nc}

$$A_{Nc} = \frac{A_p - \frac{\pi}{4}\left(D_{bc} - \min\left(3h'_{ef}, D_{bc}\right)\right)^2}{n_a}$$

$A_{Nc} = [21{,}038 - (3.14/4) \times \{144.00 - \min\ (3 \times 12.86, 144.00)\}^2]/12$

Calculated $A_{Nc} = 1{,}026$ in.^{2}

For a single anchor, $A_{Nc} > A_{Nco}$; thus,

$A_{Nc} = \text{Min (Calculated } A_{Nc} \text{ and } n_a A_{Nco})$ (Section 17.6.2.1.1)

$A_{Nc} = \min\ (1{,}026; 1{,}489)$

Thus, $A_{Nc} = 1{,}026$ in.^{2}

$A_{Nc}/A_{Nco} = 1{,}026/1{,}489 = 0.69$

Basic Concrete Breakout Strength, N_b

$N_b = k_c \lambda_a \sqrt{f'_c} h_{ef}^{1.5}$ [Equation (17.6.2.2.1)]

$k_c = \underline{24}$ (cast-in-anchors) $f'_c = \underline{4{,}000 \text{ psi}}$

$\lambda_a = \underline{1.0}$ (reduction factor for light-weight concrete)

$N_b = (24 \times 1 \times 4{,}000^{0.5} \times 12.86^{1.5})/1{,}000 = 70$ kips

Modification factors, ψ

If $c_a < 1.5h_{ef}$, then $\psi_{ed,N} = 0.7 + 0.3\dfrac{c_{a,\min}}{1.5h_{ef}}$ (Section 17.6.2.4.1b)

$\psi_{ed,N} = 0.7 + (0.3 \times (7.68/(1.5 \times 12.86))) = 0.819$

$\psi_{c,N} = \underline{1.25}$ (cast-in anchor in uncracked section) (Section 17.6.2.5)

$\psi_{cp,N} = \underline{1.0}$ (cast-in anchor) (Section 17.6.2.6)

Concrete Breakout Strength of Anchor in Tension

$N_{cb} = \dfrac{A_{Nc}}{A_{NcO}}\ \psi_{ed,N}\psi_{c,N}\psi_{cp,N}N_b$ [Equation (17.6.2.1a)]

$N_{cb} = (1{,}026/1{,}489) \times 0.819 \times 1.25 \times 1 \times 70 = 49.4$ kips

@seismicisolation

$\Phi = 0.70$ *(supplementary reinforcement not present)* (Table 17.5.3b)

$\Phi N_{cb} = 49.4 \times 0.7 = 34.6$ kips

(d) Concrete breakout strength in shear (ΦV_{cb})

Shear is taken 100% by shear friction as shown in Part 3.

(e) Pullout strength of anchor in tension (ΦN_{pn}) (Section 17.6.3)

$N_{pn} = \psi_{c,p} N_p$ [Equation (17.6.3.1)]

$\psi_{c,p} = \underline{1.4}$ (analysis indicates no cracking at service loads) (Section 17.6.3.3.1a)

Pullout strength of a single anchor, $N_p = 8A_{brg} f_c'$ [Equation (17.6.3.2.2a)]

Using $f_c' = \underline{4{,}000 \text{ psi}}$

$N_p = 8 \times 3.12 \times 4{,}000/1{,}000 = 99.8$ kips

$\Phi = 0.70$ *(supplementary reinforcement not present)* (Table 17.5.3b)

$\Phi N_{pn} = 0.7 \times 1.4 \times 99.8 = 97.8$ kips

(f) Concrete side-face blowout strength of anchor in tension (ΦN_{sb}) (Section 17.6.4)

$N_{sb} = F_{cor}(160 c_{a1} \sqrt{A_{brg}} \lambda_a \sqrt{f_c'})$ [Equation (17.6.4.1)]

As calculated in Step 5c, $c_{a1} = 7.68$ in.

$c_{a2} = 19.29$ in.

Effective embedment length, $h_{ef} = 14.50$ in.

$\lambda_a = 1$

Factor $F_{cor} = (1 + c_{a2}/c_{a1})/4$ if $c_{a2} < 3\, c_{a1}$ (Section 17.6.4.1.1)

Where $1 \leq c_{a2}/c_{a1} \leq 3.0$

$F_{cor} = 0.878$ as $c_{a2} < 3\, c_{a1}$

$N_{sb} = 0.878 \times (160 \times 7.68 \times 3.12^{0.5} \times 1 \times 4{,}000^{0.5})/1{,}000$

$N_{sb} = 120.5$ kips

$\Phi = 0.70$ (Table 17.5.3b)

$\Phi N_{sb} = 0.7 \times 120.5 = 84.4$ kips

(g) Concrete pryout strength of anchor in shear

Shear is taken 100% by shear friction, as shown in Part 3.

6. **Calculate the Lowest Design Tensile Strength of Anchorage** (Section 17.5.2)

$\Phi N_n = \min(\Phi N_{sa}, \Phi N_{cb}, \Phi N_{pn}, \Phi N_{sb})$

$\Phi N_n = \min(61.3, 34.6, 97.8, 84.4) = 34.6$ kips (Table 17.5.2)

7. **Conclusion**

$\Phi N_n = 34.6$ kips $> N_{ua} = 29.5$ kips

Unity Ratio $= 29.5/34.6 = 0.85$

Thus, the anchorage is adequate for all possible tensile failure modes.

@seismicisolation

EXAMPLE 4: SHEAR LUG PLATE SECTION DESIGN

Note: All references are to ACI 318-19 unless otherwise noted.

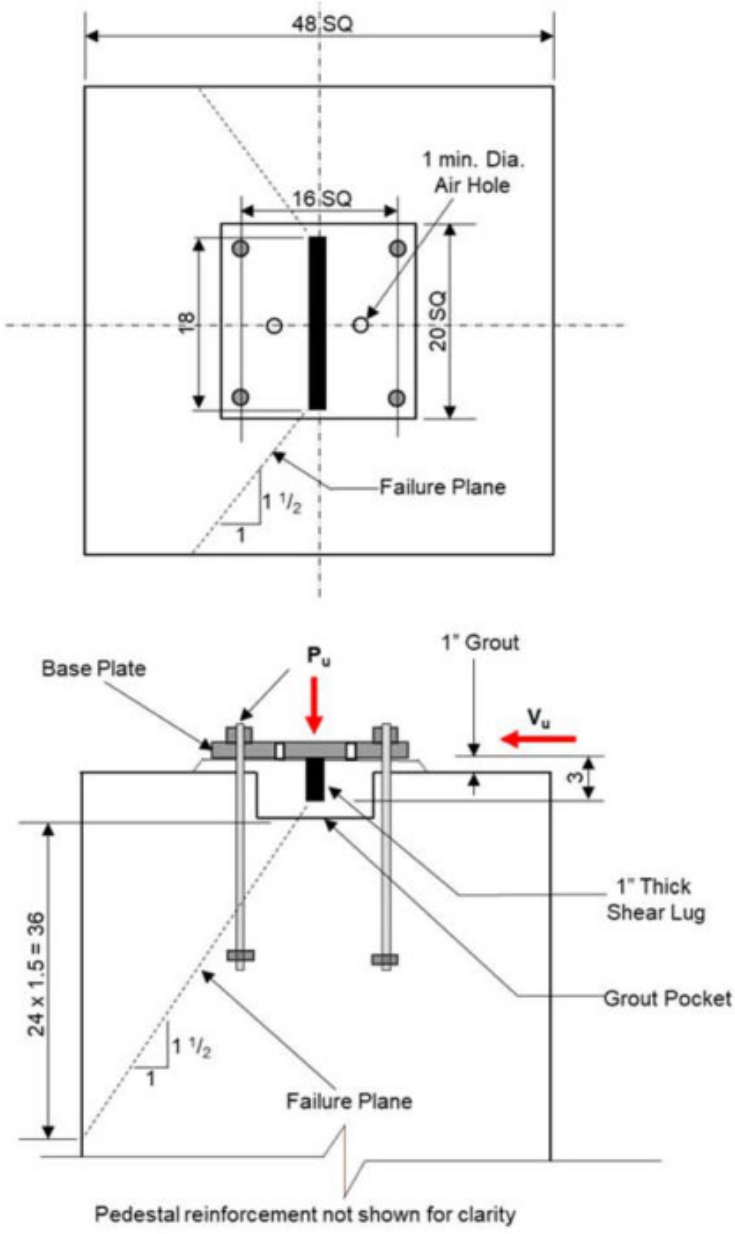

Example 4 Sketch 1

@seismicisolation

Design Data

Factored loads (gravity plus wind-maximum uplift condition)

Shear (V_u) = 30 kips $V_{ua} = V_u = 30$ kips

Tension (P_u) = −10 kips (minus because load is in tension)

Concrete: $f_c' = 4{,}000$ psi

Steel base plate and shear lug: $f_{ya} = 36$ ksi

Contact plane between the grout and the base plate 1 in. above the concrete

Base plate is 20 in.^{2}

Pedestal is 4 ft^2.

(4) – 1 in.-diameter ASTM F1554 Gr 36 anchors

Standard weight concrete ($\lambda_a = 1.0$)

Low-seismic area (ductility not required)

Layout

1. Shear lug is required to be constructed from rectangular plates or steel shapes composed of plate-like elements, welded to the base plate. (17.11.1.1.1)
2. A minimum of four anchors should be provided that satisfy the requirements of ACI 318-19 Chapter 17, with the exception that they do not need to meet the shear requirements (steel shear strength, concrete breakout strength of anchor in shear, and concrete pryout strength of anchor in shear). (17.11.1.1.2)
3. Base plate must have a minimum of a 1 in.-diameter hole along each of the long sides of the shear lug. This is to verify proper grout consolidation around the shear lug and to avoid trapping of air beneath the base plate. (17.11.1.2)
4. Bearing area to be considered below the concrete surface is a maximum of $2t_{sl}$, where t_{sl} is the thickness of the shear lug. [17.11.2.1.1(b)]
5. If we assume t_{sl} is 1 in., then the maximum depth of bearing that can be considered is 2 in. below the top of the concrete. Therefore, the maximum depth of the shear lug plate that can be considered is 3 in. (2 in. + 1 in. grout space). It makes no sense in wasting plates, so use a 3 in.-deep plate.
6. Aforementioned layout satisfies these requirements.

Calculate the Nominal Bearing Strength of the Shear Lug, $V_{brg,sl}$

$V_{brg,sl} = 1.7 f_c' A_{ef,sl} \Psi_{brg,sl}$ (17.11.2.1)

$\Psi_{brg,sl}$ = Modification factor for the effects of the factored axial load, P_u.

P_u is negative for tension and positive for compression. (17.11.2.2.1)

$\Psi_{brg,sl} = 1 + P_u/(n\, N_{sa}) \leq 1.0$ (17.11.2.2.1a)

@seismicisolation

$P_u = -10$ kips

n = Number of anchors in tension = 4

N_{sa} = Nominal strength of a single anchor = $A_{se} f_{ya}$ = 0.606 in.^{2} × 58 ksi = 35.1 kips (ASTM F1554 Grade 36 anchor)

$\Psi_{brg,sl} = 1 - 10/(4(35.1)) = 0.928$

$A_{ef,sl}$ = Effective bearing area of shear lug = 2 in. × 18 in. = 36 in.^{2}

$V_{brg,sl} = 1.7 f_c' A_{ef,sl} \Psi_{brg,sl} = 1.7(4 \text{ ksi})(36 \text{ in.}^2)(0.928) = 227$ kips

ϕ for bearing strength = 0.65 (Table 21.2.1)

Pedestal capacity for the bearing strength of the shear lug = $\phi V_{brg,sl} = 0.65 \times 227$

= 148 kips > 30 kips **OK**

Calculate Concrete Breakout Strength of Shear Lug, $V_{cb,sl}$

The method for evaluating the concrete breakout strength of shear lugs is similar to that used for anchors. The difference is in the determination of A_{Vc}. This is illustrated in Figure R17.11.3.1 of ACI 318-19.

$$V_{cb,sl} = (A_{Vc}/A_{Vco})\, \Psi_{ed,V} \Psi_{c,} \Psi_{h,V} V_b \qquad \text{(17.11.3.1 and 17.7.2.1a)}$$

A_{Vc} = Projected concrete failure area of the shear lug

c_{a1} = (48 in. − 1 in.)/2 = 23.5 in.

Depth of the failure area = 1.5 c_{a1} + 2 in. = 1.5(23.5) + 2 = 37.25 in.

Width of the failure area = 48 in.

$A_{ef,sl}$ = Effective area of the shear lug = 2 in. × 18 in. = 36 in.^{2}

($A_{ef,sl}$ is not to be included in A_{Vc}) (17.11.3.1.1)

A_{Vc} = (37.25 in. × 48 in.) – 36 in.^{2} = 1,752 in.^{2}

A_{Vco} = Projected concrete failure area of the shear lug, if not limited by corner influences or member thickness

c_{a1} = (48 in. − 1 in.)/2 = 23.5 in.

Depth of the failure area = 1.5 c_{a1} + 2 in. = 1.5(23.5) + 2 = 37.25 in.

Width of the failure area = 18 in. + 2(1.5 c_{a1}) = 18 + 2(1.5 × 23.5) = 88.5 in.

$A_{ef,sl}$ = Effective area of the shear lug = 2 in. × 18 in. = 36 in.^{2}

A_{Vco} = (37.25 in. × 88.5 in.) – 36 in.^{2} = 3,261 in.^{2}

(A_{Vc}/A_{Vco}) = 1,752 in.^{2}/3,261 in.^{2} = 0.537

$\Psi_{ed,V}$ = Breakout eccentricity factor used to modify breakout strength based on the eccentricity of applied loads. There is no eccentricity ($e_v' = 0$).

@seismicisolation

$\Psi_{ed,V} = 1/(1 + e'_v/1.5\, c_{a1}) = 1$ (17.7.2.3.1)

$\Psi_{c,V}$ = Breakout cracking factor used to modify the breakout strength for shear lugs based on the influence of cracks in the concrete and the presence or absence of supplementary reinforcement. Using two sets of No. 4 ties within top 5 in. of the pedestal.

$\Psi_{c,V} = 1.2$ (Table 17.7.2.5.1)

$\Psi_{h,V}$ = Breakout thickness factor used to modify the shear strength of shear lugs located in concrete members with $h_a < 1.5\, c_{a1}$. (h_a is the thickness of the member where the shear lug is located measured parallel to the shear lug axis.) This will apply only to shear lugs that are in beams or slabs.

$\Psi_{h,V} = 1.0$ (17.7.2.6.1)

$V_b = 9\lambda_a (f'_c)^{0.5} (c_{a1})^{1.5}$ (17.11.3.1 and 17.7.2.2.1b)

λ_a = Modification factor for lightweight concrete = 1 (This is std conc.)

$f'_c = 4{,}000$ psi $\quad (f'_c)^{0.5} = 63.2$

$c_{a1} = 23.5$ in. $\quad (c_{a1})^{1.5} = 114$

$V_b = 9(1)(63.2)(114) = 64{,}800$ pounds $= 64.8$ kips

$V_{cb,sl} = (A_{Vc}/A_{Vco})\, \Psi_{ed,V}\, \Psi_{c,V}\, \Psi_{h,V}\, V_b = 0.537 \times 1 \times 1.2 \times 1 \times 64.8 = 41.8$ kips

ϕ for shear (concrete breakout) = 0.75

(Supplementary reinforcement provided) (Table 17.5.3b)

Pedestal capacity for shear breakout of the shear lug $= \phi V_{cb,sl} = 0.75 \times 41.8$

$= 31.4$ kips > 30 kips **OK**

Concrete Breakout Strength of the Anchor Group in Tension (N_{cbg})

Calculation of N_{cbg} is required to check the Tension and Shear Interaction according to Section 17.8. The breakout strength will govern for tension. If a complete check of tension capacity is required, use Example 1 as an example.

$A_{Nc} = (2 \times 1.5\, h_{ef} + s)^2 = (2 \times 1.5 \times 10 + 16)^2 = 2{,}116$ in.^{2}

$A_{Nco} = 9h_{ef}^2 = 9 \times 10^2 = 900$ in.^{2} (17.6.2.1.4)

$\Psi_{ec,N}$, $\Psi_{ed,N}$, $\Psi_{c,N}$, $\Psi_{cp,N}$, and λ_a are all equal to 1 (see Example 1 for details)

$N_b = k_c \lambda_a (f'_c)^{1/2} (h_{ef})^{1.5} = 24(1)(4{,}000)^{1/2}(10)^{1.5}$

$= 24(63.2)(31.6) = 47{,}900$ lb $= 47.9$ kips (17.6.2.2.1)

$N_{cbg} = (A_{Nc}/A_{Nco}) \Psi_{ec,N} \Psi_{ed,N} \Psi_{c,N} \Psi_{cp,N}$

$N_b = (2{,}116/900)(1)(1)(1)(1)(47.9) = 113$ kips (17.6.2.1b)

@seismicisolation

Tension and Shear Interaction (17.8)

$N_{ua}/(\phi N_n) \leq 0.2$ (17.8.2a)

$N_{ua} = P_{ua} = 10$ kips

$\phi N_n = \phi N_{cbg} = 0.75 \times 113$ kips $= 84.8$ kips

$N_{ua}/(\phi N_n) = 10/84.8 = 0.12 < 0.2$

Because $N_{ua}/(\phi N_n) < 0.2$, it is permitted to ignore the interaction between tension and shear. (17.8.3)

Comment:

Note that the allowable concrete breakout strength severely limits the capacity of the shear lug when compared to older designs based on ACI 349. The engineer should consider using the concepts for shear reinforcement demonstrated in Example 2 to allow for higher shear capacities.

Steel and weld design

The steel and weld design of the shear lug and base plate are left to the engineer.

EXAMPLE 5: SHEAR LUG PIPE SECTION DESIGN

Note: All references are to ACI 318-19 unless otherwise noted.

Note: ACI 318-19, Section 17.11 does not specifically have a method for pipe section shear lugs, although they are allowed. This committee has determined that the method shown here is acceptable for shear lug pipe section design.

Design Data

Factored loads (gravity plus wind-maximum uplift condition)

Shear (V_u) = 30 kips $V_{ua} = V_u = 30$ kips

Tension (P_u) = −30 kips (minus because load is in tension)

Concrete: $f_c' = 4{,}000$ psi

Steel base plate and shear pipe: $f_{ya} = 36$ ksi

Contact plane between the grout and the base plate 1 in. above the concrete

Base plate is 20 in.^{2}

Pedestal is 4 ft^2

4 – 1 in. diameter ASTM F1554 Grade 36 anchors

@seismicisolation

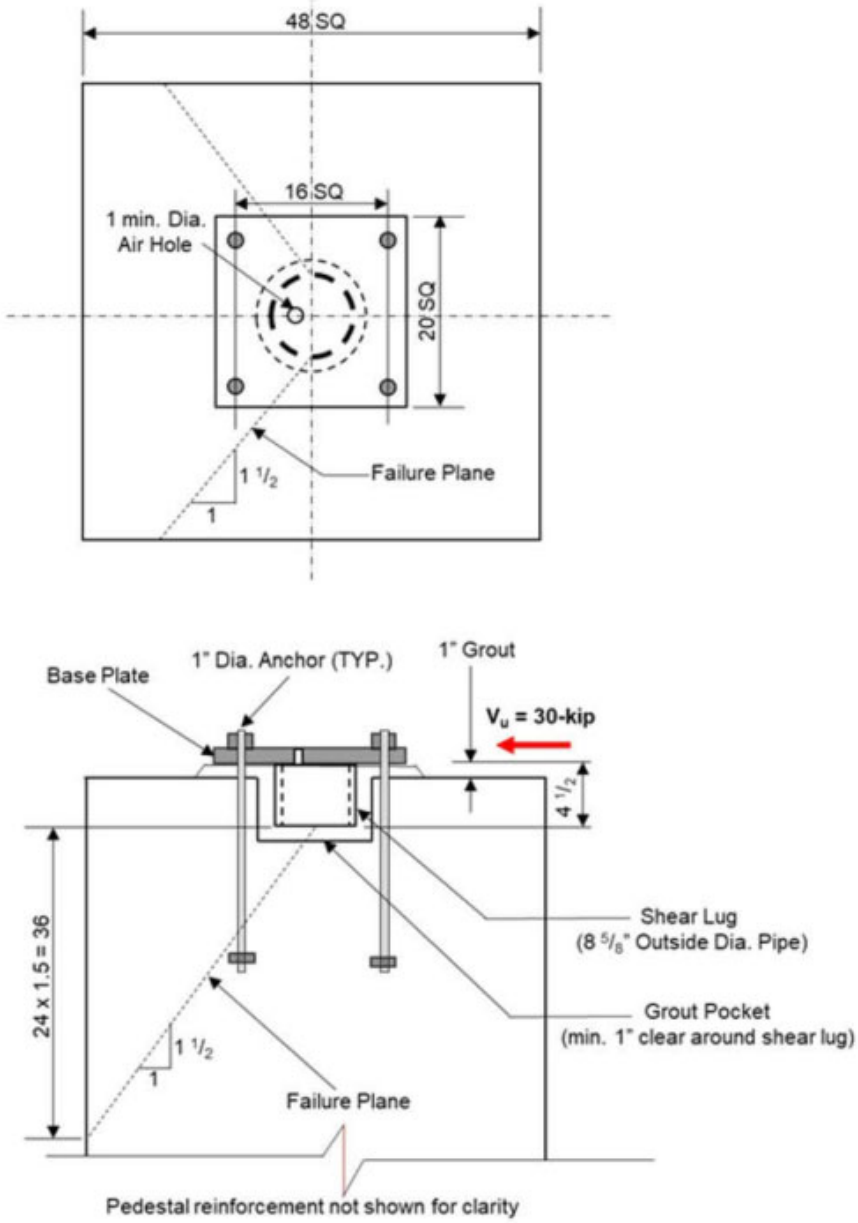

(Dimensions are in inches)

Example 5 Sketch 1

@seismicisolation

Ductility is not required. $\phi = 0.75$ for the concrete breakout strength of the pipe in shear per ACI 318-19, Table 17.5.3(b). (Supplementary reinforcement is present because of the ties at the top of the pedestal.) For bearing of the lug against the concrete, $\phi = 0.65$ per ACI 318, Section 21.2.1(d).

$V_{ua} = 30$ kips

Calculate the Nominal Bearing Strength of the Shear Lug Pipe Section, $V_{brg,sl}$

Based on base plate size, assume that the pipe diameter will be an 8-in. std. pipe.

$D = 8.63$ in.; $t = 0.322$ in.; $D/t = 26.8$; $Z = 20.8$ in.^{3}; Area $= 7.85$ in.^{2} (*AISC Manual*)

$$V_{brg,sl} = 1.7 f_c' A_{ef,sl} \Psi_{brg,sl} \qquad (17.11.2.1)$$

$\Psi_{brg,sl}$ = Modification factor for the effects of the factored axial load, and P_u. P_u is negative for tension and positive for compression (17.11.2.2.1)

$$\Psi_{brg,sl} = 1 + P_u/(n\, N_{sa}) \leq 1.0 \qquad (17.11.2.2.1a)$$

$P_u = -30$ kips

n = Number of anchors in tension = 4

N_{sa} = Nominal strength of a single anchor $= A_{se} f_{ya}$

$= 0.606$ in.$^2 \times 58$ ksi $= 35.1$ kips (ASTM F1554 Grade 36 anchor)

$\Psi_{brg,sl} = 1 - 30/(4(35.1)) = 0.786$

$A_{ef,sl} =$ Effective bearing area of a shear lug (Example 5, Sketch 2)

$t_{sl} = t = 0.322$ in. $h_{sl} = 3.5$ in.

$= 2 \times 3 \times t_{sl} \times h_{sl} + 2 \times t_{sl} \times (D - 6 \times t_{sl})$

$= 2 \times 3 \times 0.322 \times 3.5 + 2 \times 0.322 \times (8.63 - 6 \times 0.322) = 11.03$ in.^{2}

$V_{brg,sl} = 1.7 f_c' A_{ef,sl} \Psi_{brg,sl} = 1.7(4 \text{ ksi})(11.03 \text{ in.}^2)(0.786) = 51.6$ kips

ϕ for bearing strength $= 0.65$ [21.2.1(d)]

Pedestal capacity for the bearing strength of the shear lug pipe section $= \phi V_{brg,sl} = 0.65 \times 51.6 = 33.5$ kips > 30 kips **OK**

Calculate Concrete Breakout Strength of Shear Lug Pipe Section, $V_{cb,sl}$

The method for evaluating the concrete breakout strength of shear lugs is similar to that used for anchors. The difference lies in the determination of A_{Vc}. This is illustrated in Figure R17.11.3.1 of ACI 318-19.

@seismicisolation

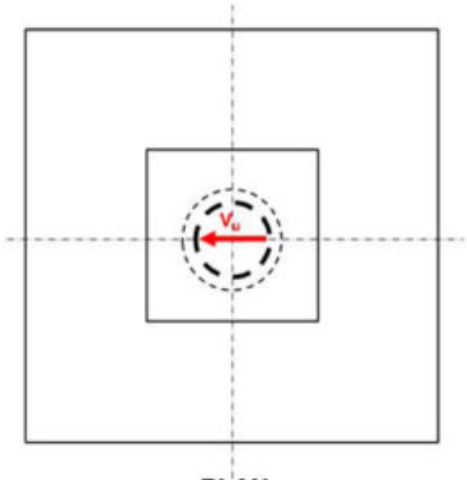

PLAN

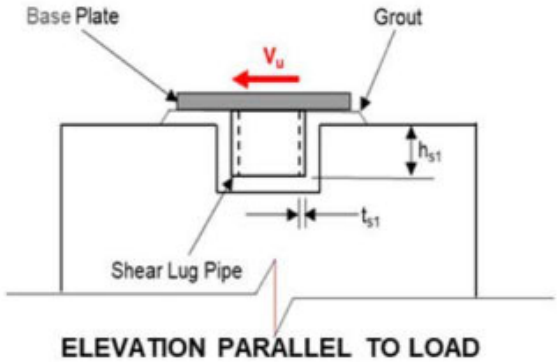

ELEVATION PARALLEL TO LOAD

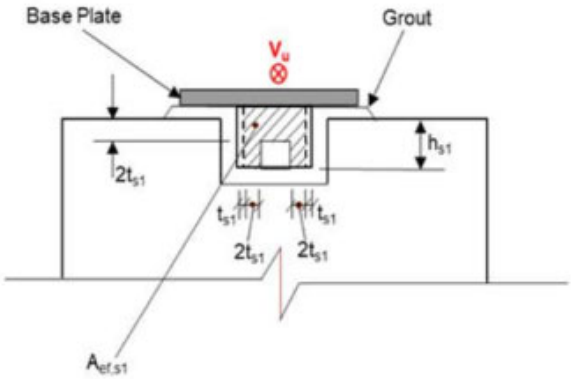

ELEVATION PERPENDICULAR TO LOAD

(anchors, airholes, and pedestal reinforcement not shown for clarity)

Example 5 Sketch 2

@seismicisolation

$V_{cb,sl} = (A_{Vc}/A_{Vco})\ \Psi_{ed,V}\ \Psi_{c,V}\ \Psi_{h,V}\ V_b$ (17.11.3.1 and 17.7.2.1a)

A_{Vc} = Projected concrete failure area of the shear lug pipe section

$c_{a1} = 24$ in.

Depth of the failure area = 1.5 c_{a1} + 3.5 in. = 1.5(24) + 3.5 = 39.5 in.

Width of the failure area = 48

$A_{ef,sl}$ = Effective area of the shear lug = 11.03 in.^{2}

($A_{ef,sl}$ is not to be included in A_{Vc}) (17.11.3.1.1)

A_{Vc} = (39.5 in. × 48 in.) – 11.03 in.^{2} = 1,885 in.^{2}

A_{Vco} = Projected concrete failure area of the shear lug, if not limited by corner influences or member thickness

$c_{a1} = 24$ in.

Depth of the failure area = 1.5 c_{a1} + 3.5 in. = 39.5 in.

Width of the failure area = 2(1.5 c_{a1}) + D = 2(1.5 × 24) + 8.63 = 80.6 in.

$A_{ef,sl}$ = Effective area of the shear lug = 11.03 in.^{2}

A_{Vco} = (39.5 in. × 80.6 in.) – 11.03 in.^{2} = 3,173 in.^{2}

(A_{Vc}/A_{Vco}) = 1,885 in.^{2}/3,173 in.^{2} = 0.594

$\Psi_{ed,V}$ = Breakout eccentricity factor used to modify breakout strength based on the eccentricity of applied loads. There is no eccentricity ($e'_v = 0$).

$\Psi_{ed,V} = 1/(1 + e'_v/1.5\ c_{a1}) = 1$ (17.7.2.3.1)

$\Psi_{c,V}$ = Breakout cracking factor used to modify the breakout strength for shear lugs based on the influence of cracks in the concrete and the presence or absence of supplementary reinforcement. Using two sets of No. 4 ties within the top 5 in. of the pedestal,

$\Psi_{c,V} = 1.2$ (Table 17.7.2.5.1)

$\Psi_{h,V}$ = Breakout thickness factor used to modify the shear strength of the shear lugs located in concrete members with $h_a < 1.5\ c_{a1}$. (h_a is the thickness of the member where the shear lug is located measured parallel to the shear lug axis.) This will apply only to shear lugs that are in beams or slabs.

$\Psi_{h,V} = 1.0$ (17.7.2.6.1)

$V_b = 9\lambda_a (f'_c)^{0.5} (c_{a1})^{1.5}$ (17.11.3.1 and 17.7.2.2.1b)

λ_a = Modification factor for lightweight concrete = 1 (This is std conc.)

$f'_c = 4{,}000$ psi $(f'_c)^{0.5} = 63.2$

@seismicisolation

$c_{a1} = 24$ in. $\quad (c_{a1})^{1.5} = 118$

$V_b = 9(1)(63.2)(118) = 67{,}100$ pounds $= 67.1$ kips

$V_{cb,sl} = (A_{Vc}/A_{Vco})\,\Psi_{ed,V}\,\Psi_{c,V}\,\Psi_{h,V}\,V_b = (0.594)(1)(1.2)\,(1)\,(67.1) = 47.8$ kips

ϕ for shear (concrete breakout) $= 0.75$

(Supplementary reinforcement provided) (Table 17.5.3b)

Pedestal capacity for shear breakout of the shear lug $= \phi\,V_{cb,sl} = 0.75 \times 47.8$

$= 35.9$ kips > 30 kips **OK**

Concrete Breakout Strength of the Anchor Group in Tension (N_{cbg})

The calculation of N_{cbg} is required to check the tension and shear interaction according to Section 17.8. The breakout strength will govern for tension. If a complete check of tension capacity is required, use Example 1 as an example.

$A_{Nc} = (2 \times 1.5\,h_{ef} + s)^2 = (2 \times 1.5 \times 10 + 16)^2 = 2{,}116$ in.^{2}

$A_{Nco} = 9h_{ef}^2 = 9 \times 10^2 = 900$ in.^{2} (17.6.2.1.4)

$\Psi_{ec,N}$, $\Psi_{ed,N}$, $\Psi_{c,N}$, $\Psi_{cp,N}$, and λ_a are all equal to 1 (see Example 1 for details)

$N_b = k_c\lambda_a(f_c')^{1/2}(h_{ef})^{1.5} = 24(1)(4{,}000)^{1/2}(10)^{1.5}$

$= 24(63.2)(31.6) = 47{,}900$ lb $= 47.9$ kips (17.6.2.2.1)

$N_{cbg} = (A_{Nc}/A_{Nco})\Psi_{ec,N}\Psi_{ed,N}\Psi_{c,N}\Psi_{cp,N}\,N_b = (2{,}116/900)(1)(1)(1)(1)(47.9)$

$= 113$ kips (17.6.2.1b)

Tension and Shear Interaction (17.8)

$N_{ua}/(\phi N_n) \le 0.2$ (17.8.2a)

$N_{ua} = P_{ua} = 30$ kips

$\phi N_n = \phi N_{cbg} = 0.75 \times 113$ kips $= 84.8$ kips

$N_{ua}/(\phi N_n) = 30/84.8 = 0.35 > 0.2$

$V_{ua}/(\phi V_n) = 30/35.9 = 0.84 > 0.2$

Therefore, Equation (17.8.3) must be used.

$N_{ua}/(\phi N_n) + V_{ua}/(\phi V_n) \le 1.2$ (17.8.3)

$N_{ua}/(\phi N_n) + V_{ua}/(\phi V_n) = 0.35 + 0.84 = 1.19 < 1.2$ **OK**

See note at the end of Example 1 for a more accurate and less conservative method for the interaction equation.

@seismicisolation

Comment:

Note that the allowable concrete breakout strength using ACI 318-19 severely reduces the capacity of the shear lug when compared to older designs based on ACI 349. The engineer should consider using the concepts for shear reinforcement demonstrated in Example 2 to allow higher capacities for shear.

Check Steel Design of Shear Lug Pipe Section

Required bearing area $= A_{req} = V_{ua}/(0.85\phi f_c') = 30$ kips/(0.85 × 0.65 × 4 ksi)

$= 13.5$ in.^{2} (22.8.3)

Required Height of the pipe $= H = (A_{req}/D) + G$ $G =$ thickness of the grout

Required $H = (13.5$ in.$^2/8.63$ in.$) + 1$ in. $= 2.6$ in. < 4.5 in. **OK**

Factored moment $= M_u = V_{ua} \times (G + (H - G)/2)$

$= 30$ kips $\times$ (1 in. + (4.5 in. – 1 in.)/2) = 82.5 k-in.

Check if the pipe section is compact per ANSI/AISC 360-16 (AISC 2016) Table B4.1b, Case 20:

$D/t = 28.8$

$\lambda_p = 0.07\ E/F_y = 0.07 \times 29{,}000/36 = 56.4 > 28.8$

Therefore, the section is compact, and buckling does not apply.

Check Moment:

$M_n = F_y \times Z = 36$ ksi $\times$ 20.8 in.$^3 = 749$ k-in. [ANSI/AISC 360-16, Equation (F8-1)]

$\phi_b = 0.9$

$\phi_b M_n = (0.9)(749$ k-in.$) = 674$ k-in. > 82.5 k-in. **OK**

Check Shear:

$V_n = 0.6\ F_y$ (Gross Area)/2

$= 0.6 \times 36$ ksi $\times$ 7.85 in.$^2/2 = 84.8$ kips

$\phi_v = 0.9$

$\phi_v V_n = (0.9)(84.8$ kips$) = 76.3$ kips > 30 kips **OK**

Therefore, this 4.5-in.-long, 8-in.-diameter nominal standard weight pipe will be sufficient to carry the applied shear load and the resulting moment.

Design Weld

Minimum weld size = 3/16 in. (ANSI/AISC 360-16, Table J2.4). Try a 3/16 in. fillet weld.

@seismicisolation

Capacity of a 3/16 in. fillet weld:

For $F_{EXX} = 70$ ksi $\phi = 0.75$

$\phi F_w = \phi 0.60\, F_{EXX} = 0.75 \times 0.60 \times 70$ ksi $= 31.5$ ksi (ANSI/AISC 360-16, Table J2.5)

Combined stress on weld:

$M_u = 82.5$ kip-in. $V_u = 30$ kips $t = 3/16$ in.

Area of the weld $= A_w = \pi D t = \pi \times 8.63 \times 3/16 = 5.08$ in.^{2}

Section modulus of the weld $= S_x = t\, \pi r^2$ [Blodgett (1966), Table 2]

$S_x = 3/16 \times \pi \times (4.315)^2 = 10.97$ in.^{3}

$f_w = [(M_u/S_x)^2 + (V_u/A_w)^2]^{0.5} = [(82.5 \text{ k-in.}/10.97 \text{ in.}^3)^2 + (30 \text{ k}/5.08 \text{ in.}^2)^2]^{0.5}$

$= 7.9$ ksi < 31.5 ksi **OK**

EXAMPLE 6: ANCHORAGE DESIGN FOR COLUMN PEDESTALS

(Tension Reinforcement Considered)

When shear is small, the size of the pedestal can be reduced using supplementary tensile reinforcing. The following is the same as Example 1, except Shear $(V_{ua}) = 0$ kips.

Shear $(V_{ua}) = 0$ kips	According to Example 1:
Moment $(M_u) = 60$ kip-ft	$T = 59.6$ kips on two anchors
Tension $(N_{ua}) = 17$ kips	Nominal anchor rod diameter = 1 ½ in.
	$f'_c = 4{,}000$ psi
Assume a 2 ft 6 in. × 2ft 0 in. pedestal.	1 ¼ in.-diameter anchor

Assume that anchors are resisted by three hairpins. (Sketch 1)

59.6 kips/3 = 19.9 kips

According to Table 3.5, one No. 6 hairpin resists 28.9 kips. (Other Bars, Cover ≥2 ½ in.), >19.9 kips OK

According to Table 3.5, the inside diameter of No. 6 hairpin is 4.5 in.

A = Side cover normal to hairpin = 6 in. – 0.38 in. = 5.62 in., ≥ 2 ½ in. OK

B = Side cover longitudinal to hairpin = (30 in. – 16 in.)/2 – 4.5 in./2 – 0.75 in. ≥ 4 in. OK

l_{dh} (min) = 9.7 in. according to Table 3.5. The width of the hairpin (to the center of each leg) = 4.5-in. minimum inside the bend diameter + 1 rebar diameter = 5.25 in.

@seismicisolation

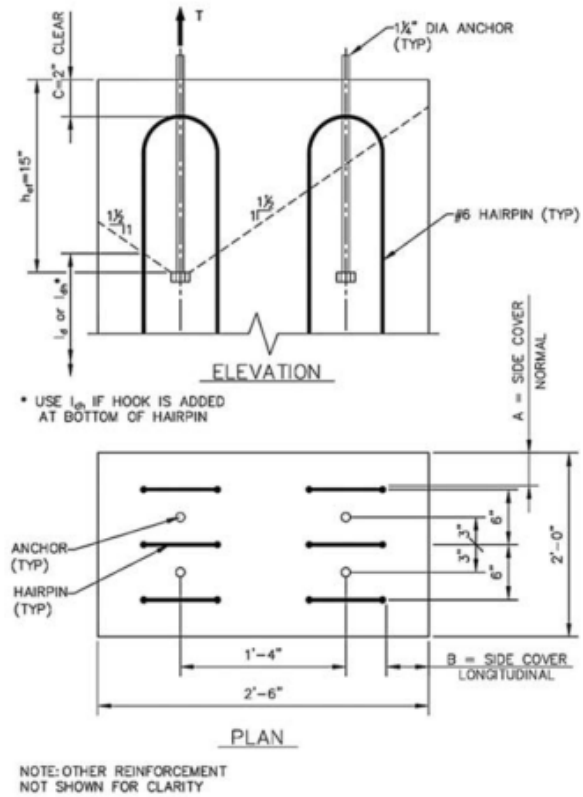

Example 6 Sketch 1

Space hairpins are 3 in. away from each anchor.

Distance from the anchor to the leg of the hairpin $= \sqrt{3^2 + (5.25/2)^2} = 3.99$ in.

C = top concrete cover = 2 in.

Required $h_{ef} = C + l_{dh} + 3.99/1.5 = 2 + 9.7 + 3.99/1.5 = 14.4$ in.

min $h_{ef} = 12\ d_0 = 12 \times 1.25 = 15$ in. (paragraph 3.2.2 of this publication)

Use h_{ef} = 15 in. (Sketch 1).

References

ACI (American Concrete Institute). 2013. *Code requirements for nuclear safety-related concrete structures and commentary*, ACI 349-13. Farmington Hills, MI: ACI.

ACI. 2019. *Building code requirements for structural concrete and commentary*, ACI 318-19. Farmington Hills, MI: ACI.

@seismicisolation

AISC (American Institute of Steel Construction). 2016. *Specification for structural steel buildings*, ANSI/AISC 360-16. Chicago: AISC.

ANSI (American National Standards Institute). 2019. *Unified inch screw threads (UN, UNR, and UNJ thread form)*, ANSI/ASME B1.1-2019. Fairfield, NJ: ASME.

ASCE. 2017. *Minimum design loads and associated criteria for buildings and other structures*, ASCE 7-16. Reston, VA: ASCE.

ASTM International. 2020. *Standard specification for anchor bolts, steel, 36, 55, and 105-ksi yield strength*, ASTM F1554-20. West Conshohocken, PA: ASTM.

Blodgett, O. W. 1966. *Design of welded structures*. Cleveland, OH: James F. Lincoln Arc Welding Foundation.

CEN (European Committee for Standardization). 2018. *Eurocode 2—Design of concrete structures—Part 4: Design of fastenings for use in concrete*, EN 1992-4:2018. Brussels: European Commission.

PIP (Process Industry Practices). 2008. *Vertical vessel foundation design guide*, PIP STE03350. Austin, TX: PIP.

Wey, E., T. Hayes, and D. Naqvi. 2010. "Concrete breakout strength in tension for vertical vessel anchorage in octagon pedestals." In *Structures Congress*, edited by S. Senapathi, K. Casey, and M. Holt. Reston, VA: ASCE.

@seismicisolation

@seismicisolation
@seismicisolation

Glossary

Anchorage Structural assembly designed to transmit all components of the design force from a structure or a piece of equipment to the foundation; it consists of a combination of anchors, shear lugs, concrete, and reinforcement.

Anchor Rod element of the anchorage used to transmit the components of the design force from a structure or a piece of equipment to the foundation. Anchor types include cast-in-place rods, welded studs, and manufactured post-installed elements.

Attachment Element used to transfer the design force from a structure or a piece of equipment to the anchors, shear lug, and foundation; it consists of plates or structural members (such as wide flange shapes or channels).

Embedment Portion of the anchorage that is within the concrete foundation. The following anchorage elements could be considered as a part of the embedment, depending on the anchorage detail: reinforcement, the attachment, the shear lug, or a portion of the anchor.

Shear Lug Short element of the anchorage used to transmit the portion of the shear component of the design force that exceeds the frictional resistance from the structure or a piece of equipment to the foundation; it consists of plate(s) or a structural member (such as wide flange shapes, square structural tubes, or pipes).

@seismicisolation

@seismicisolation
@seismicisolation

Index

Note: Page numbers followed by *f* and *t* indicate figures and tables.

adhesive anchors, 114–115, 127–128; exposure to fire, 24; large, 128–129; materials for bonded, 115; parallel standard for, 4; qualification provisions for, 119; temperature rise and bond resistance, 24; torque-controlled, 115–116*f*. *See also* post-installed anchor installation

American Concrete Institute (ACI), 1, 18–19

American Institute of Steel Construction (AISC), 1, 19

American Petroleum Institute (API), 19

anchor, 183; adhesive anchors, 114–115, 127–128; capsule anchors, 115, 118, 127; concrete breakout strength, 40–41, 41*f*; configuration and dimensions, 28; configuration of cast-in-place, 28–29; design considerations, 39–40; details and minimum dimensions, 35, 36*f*; ductility, 41–42, 49; expansion, 109–110; grouted, 127; grouted headed, 113–114*f*; installation problems, 125; large adhesive anchors, 128–129; mechanical anchors, 126–127; post-installed, 16–17; projection, 134–137; rebar, 83–84; screw, 112, 113*f*; sleeves, 30–35; stretching length, 77; threads per inch, 79*t*; torque-controlled adhesive anchors, 115–116*f*; undercut, 110–111; vertical vessel anchors, 94–97; welded, 83. *See also* cast-in-place anchor design

anchorage, 183; Charpy V-notch test, 22, 23*t*; cold temperature testing recommendations, 23*t*; dimensions, 29; elevated temperature exposure, 23; extreme temperature exposure, 22; fire exposure, 24; low temperature exposure, 22; pedestal, 93; seismic pedestal ties for, 94*f*

anchor bolt and rod assemblies, 11; fabrication, 14–16; materials for, 12*t*, 13*t*; nuts, 14; sleeves, 14; specifications, 11; washers, 14

anchor groups: concrete breakout strength, 41*f*; fatigue behavior, 85; modification factor for, 39–40

anchor materials, 11; anchorage exposed to extreme temperatures, 22–24; anchor bolt and rod assemblies, 11–16; corrosion, 17–22; headed studs, 16; post-installed anchors, 16–17; shear lugs, 17

anchor plates, 3, 102*f*, 104*t*, 105*t*; standards, 103. *See also* cast-in-place anchor design

anchor reinforcement design, 42; anchor extended into mat, 43*f*; anchor reinforcement, 43–44; load transfer method, 42; reinforcement methods, 44–45; shear force, 54–62; standard hook and hairpin, 65*t*–66*t*, 67*t*–68*t*; strength reduction factor, 45; strut-and-tie method, 45–46; supplementary reinforcement, 43;

@seismicisolation
@seismicisolation

anchor reinforcement design (cont.) tables to aid engineers in, 62; tensile capacity and tensile development length, 63*t*, 64*t*; tension force, 46–54; tension transferred to reinforcement, 45*f*; to transfer anchor forces, 45. *See also* cast-in-place anchor design
anchor rods, 11; headed, 83; materials for, 13*t*; nut installation, 72; with upset threads, 16*f*. *See also* tensioning
anchor studs, 11; materials for, 12*t*
attachment, 183

capsule anchors, 115, 118, 127. *See also* post-installed anchor installation
cartridge: anchor systems, 127; injection systems, 115. *See also* post-installed anchor installation
cast-in-place anchor: configuration, 28–29; inspection plan, 130; installation, 125–126
cast-in-place anchor design, 27; anchor plate, 102–103, 102*f*, 104*t*, 105*t*; anchor reinforcement, 42; CCD Method, 27–28; configuration and dimensions, 28–35; constructability considerations, 98–102; ductile design, 41–42; for embedded plates, 83–85; frictional resistance and shear transmission, 69–70; seismic loads, 87–98; shear lug design, 71–72; strength design, 35–41; tensioning, 72–82; vibratory loads, 85–87
CCD Method, 27–28. *See also* cast-in-place anchor design
Charpy V-notch test, 22, 23t
chip and repair method, 138f
clamping force, 75. *See also* tensioning
coatings, 19; cold-applied zinc, 20; hot-dip and mechanical galvanizing, 20, 23; insulation and fireproofing, 21; recommendations, 21. *See also* corrosion
column pedestal anchor design, 141, 179–180; anchors, 150; anchor size determining, 150–151; base plate connection data, 141; concrete breakout cone, 156; concrete breakout strength, 144; concrete pryout strength, 147; concrete side-face blowout strength, 145; design assumptions, 150; design procedure, 37–39; design steps, 150; development length, 153–154; examples, 141–148, 148–152; factored loads, maximum total, 148–149*f*; friction transmission, 145–147, 146*f*; load transfer to vertical rebars, 152; pedestal data, 141–143, 142*f*, 143*f*, 149; pullout resistance of anchor, 151; pullout strength of anchor, 145; reinforcing bars, 150; shear reinforcement design, 156; side-face blowout resistance, 152; strut-and-tie method, 156–161; tension and shear interaction, 147; tension loading, 155–156; vertical reinforcing steel amount, 152–153
compressive force, 70
concrete breakout strength: of anchors in circular pattern in shear, 40–41, 41*f*; of anchors in rectangular pattern in shear, 40
Concrete Capacity Design (CCD), 4, 5, 27–28
concrete failure, 76. *See also* tensioning
constructability considerations, 98–102, 129; cast-in-place anchor inspection plan, 130;

@seismicisolation

construction practices and safety considerations, 131–132; implementation of quality plan, 129; manufacturer-supplied template, 132*f*; ongoing inspection and proof loading, 131; post-installed anchor inspection plan, 130–131; preinstallation inspection, 130–131; recommended anchor hole diameters, 99*t*–100*t*; tolerances for embedments, 98*t*. *See also* cast-in-place anchor design; installation
cored holes, 127. *See also* post-installed anchor installation
corrosion, 17; coatings, 19–21; codes and specifications, 18–19; environmental conditions, 18; galvanized and stainless materials, 18; rates, 19; -resistant materials, 17; weathering steel, 21–22. *See also* anchor materials
cut threads, 15. *See also* anchor materials

displacement ductility, 41
ductile: connection, 36; design, 41–42; displacement ductility, 41; steel elements, 121. *See also* cast-in-place anchor design
ductility, 41

embedment, 183
Energy Division Executive Committee, xii
epoxy, 23–24
equivalent lateral force (ELF), 95–96
expansion anchors, 109–110; types, 111*f*. *See also* mechanical anchors

fatigue behavior, 85
field welding, 70
frictional resistance, 69–70. *See also* cast-in-place anchor design
full-length sleeve, 30*f*. *See also* sleeves

Gas Machinery Research Council (GMRC), 76
grouted anchors, 127; headed anchors, 113–114*f*. *See also* grouted and bonded anchors, post-installed; post-installed anchor installation
grouted and bonded anchors, post-installed, 113; adhesive anchors, 114–115; capsule anchors, 115; cartridge injection systems, 115; grouted headed anchors, 113–114*f*; materials for bonded adhesive anchors, 115; torque-controlled adhesive anchors, 115–116*f*. *See also* post-installed anchor

headed anchor rods, 83. *See also* welded anchors
headed stud, 16; anchors, 83. *See also* anchor materials; welded anchors
high-cycle fatigue, 122. *See also* post-installed anchor
hollow structural section (HSS), 17
horizontal dynamic force, maximum, 75–76. *See also* tensioning
hot-dip galvanizing, 20, 23, 70. *See also* coatings
hydraulic jacking, 77. *See also* tensioning

ICC Evaluation Service (ICC-ES), 117, 121
installation, 125; cast-in-place anchor, 125–126; constructability considerations, 129–132; post-installed anchor, 126–129; repair procedures, 132–138. *See also* repair procedures
International Building Code (IBC), 49

@seismicisolation

large adhesive anchors, 128–129. *See also* post-installed anchor installation
load transfer method, 42. *See also* anchor reinforcement design

maximum horizontal dynamic force, 75–76. *See also* tensioning
mechanical anchors, 126–127; expansion anchors, 109–110, 111*f*; post-installed, 109–112; screw anchors, 112, 113*f*; undercut anchors, 110–111. *See also* post-installed anchor installation
mechanical galvanizing, 20, 23. *See also* coatings
mechanical jacking, 77. *See also* tensioning
minimum anchorage dimensions, 29. *See also* anchor
minimum required anchor tension, 75–76. *See also* tensioning
multi-jackbolt tensioners (MJTs), 77, 78*f*. *See also* tensioning

nuts, 14. *See also* anchor materials

octagonal pedestal, anchor design for, 161; factored shear force applied to single anchor, 162–163; lowest design tensile strength of anchorage, 167; maximum factored tensile load on single anchor, 164; strength of anchorage in tension and shear, 165–167
overconservatism, 37

partial sleeves, 30*f*. *See also* sleeves
pedestal: anchorage, 93; reinforced concrete, 93; seismic pedestal ties for anchorage, 94*f*
Petrochemical Energy Committee, xi. *See also* Task Committee
post-installed anchor, 16–17, 109; adhesive anchors, 114–115; allowable stress design, 119; anchor length, 117; anchor spacing, 117; capsule anchors, 115, 118; cartridge injection systems, 115; concrete quality and condition, 118; connection and consequences of failure, 119; considerations in design, 116; design, 119; design for high-cycle fatigue, 122; design of post-installed reinforcing bar connections, 122–123; ductile steel elements, 121; ductility of, 120–121; embedment depth, 117; expansion anchors, 109–110, 111*f*; exposure to various conditions, 118–119; grouted and bonded anchors, 113–116; grouted headed anchors, 113–114*f*; inspection plan, 130–131; installation conditions, 118; loading type and direction, 117; materials for bonded adhesive anchors, 115; mechanical anchors, 109–113; post-installed anchor qualification, 122; required edge distances, 117; screw anchors, 112, 113*f*; seismic loading, 121–122; strength design, 119–120; torque-controlled adhesive anchors, 115–116*f*; types, 109, 110*f*; undercut anchors, 110–111. *See also* anchor materials
post-installed anchor installation, 126; adhesive anchors, 127–128; capsule anchors, 127; cartridge anchor systems, 127; cored holes, 127; grouted anchors, 127; large adhesive anchors, 128–129; mechanical anchors, 126–127. *See also* installation
preset tensile stresses, 73. *See also* tensioning
Process Industry Practices (PIP), xiii, 2

@seismicisolation

rebar anchors, 83–84. *See also* welded anchors
reinforced concrete pedestals, 93
relaxation, 80–82. *See also* tensioning
repair procedures, 132; chip and repair method, 138*f*; excessive anchor projection, 137; failure to tape pretensioned anchors, 137–138; inadequate anchor projection, 134–137; interference with reinforcement, 138; material property issues, 137; misalignment issues, 133; welding of anchor extension, 135*f*, 136*f*; welding of anchor to base plate, 134*f*; welding of nut to anchor, 134*f*. *See also* installation
rolled threads, 15. *See also* anchor materials

screw anchors, 112, 113*f*. *See also* mechanical anchors
Seismic Design Category (SDC), 38
seismic loads, 87; anchorage design, 88; anchorage seismic design considerations, 97–98; connections designed in accordance with AISC 341–16, 93; flowchart for seismic design of anchorage, 89*f*–92*f*; loading, 121–122; minimum stretch length of vertical vessel anchors, 95*f*; nonstructural components, 93; pedestal anchorage, 93; reinforced concrete pedestals, 93; seismic design of vertical vessel anchors, 94–97; seismic pedestal ties for anchorage, 94*f*; shear transfer methodology, 97*f*. *See also* cast-in-place anchor design; post-installed anchor
seismic pedestal ties for anchorage, 94*f*
shear: anchors design to resist, 40; concrete breakout strength, 41*f*
shear force, 54; alternate model for shear loading, 57–62; anchored reinforcement, 57*f*; anchor reinforcement location, 56–57; bearing of J-shape bar on concrete and conventional stirrup on rebar, 62*f*; closed ties, 56*f*; concrete struts and tension ties for carrying anchor, 60*f*; hooks and hairpins for upper two layers, 61*f*; horizontal hairpin, 55*f*; shear angles, 58*f*; shear reinforcement configurations, 55; STM without internal ties, 60*f*; surface reinforcement for shear loading, 59*f*. *See also* anchor reinforcement design
shear lug pipe section design, 172; concrete breakout strength of, 174–178; design data, 172; nominal bearing strength of, 174; steel design of, 178–179
shear lug plate section design, 71–72, 168; concrete breakout strength, 170–172; nominal bearing strength of shear lug, 169–170
shear lugs, 17, 183; design, 71. *See also* anchor materials; cast-in-place anchor design
shot peening, 16. *See also* anchor materials
sleeves, 14, 30; design considerations, 35; full-length, 30*f*; minimum anchor dimensions, 31*t*–34*t*; partial, 30*f*. *See also* anchor; anchor materials
snug-tight, 72. *See also* tensioning
Special Concentrically Braced Frame (SCBF), 88
strength design, 35; anchorage design of column pedestals, 37–39; anchor design considerations, 39–40; concrete breakout strength in rectangular pattern in shear, 40; concrete breakout strength in

@seismicisolation

strength design (cont.)
shear, 40–41, 41*f*; designing anchors to resist shear, 40; ductile connection, 36; modification factor for anchor groups, 39–40; overconservatism, 37. *See also* cast-in-place anchor design
strength reduction factor, 45. *See also* anchor reinforcement design
strut-and-tie method (STM), 45–46, 57; example, 156–161; shear loading using, 57–62; tension loading using, 52–54, 155–156. *See also* anchor reinforcement design

Task Committee, xi, xiii; codes and design procedures, 4–5; future research, 7–8; objectives and scope, 1–2; state of research, 5–7; updates and additions to previous report, 2–4
tension force, 46; alternate model for tension loading, 52–54; concrete breakout, 49; design for anchor ductility, 49; location of anchor reinforcement, 46–49; possible STM for tension loading, 54*f*; reinforcement design to resist side-face blowout force, 51*f*; reinforcement for anchor tension resistance, 47*f*, 48*f*; side-face blowout, 50–52; spiral reinforcement, 53*f*. *See also* anchor reinforcement design
tensioning, 72; advantages, 74; alternatives to hydraulic or mechanical jacking, 78; anchor rod nut installation, 72; anchor stretching length, 77; anchor threads per inch, 79*t*; clamping force, 75; concrete failure, 76; disadvantages, 74–75; hydraulic jacking, 77; loss in tension, 81*t*; maximum horizontal dynamic force, 75–76; mechanical jacking, 77; minimum required anchor tension, 75–76; monitoring tension, 82; multi-jackbolt tensioner, 78*f*; preset tensile stresses, 73; pretensioning of anchor rods, 72; relaxation, 80–82; snug-tight, 72; stretching length, 76–77; tensioning methods, 77–80; tension load, 75–76; tightening sequence, 82*f*; torque wrench, 78; turn-of-nut, 78–79; vessel anchor chair failure, 76. *See also* cast-in-place anchor design
tension load, 75–76. *See also* tensioning
threads, 15. *See also* anchor materials
torque-controlled adhesive anchors, 115–116*f*. *See also* grouted and bonded anchors, post-installed
torque wrench, 78. *See also* tensioning
turn-of-nut, 78–79

undercut anchors, 110–111. *See also* mechanical anchors
upset threads, 15; anchor rod with upset threads, 16*f*. *See also* anchor materials

vertical vessel anchors: minimum stretch length of, 95*f*; seismic design of, 94–97; shear transfer methodology for, 97*f*
vessel anchor chair failure, 76. *See also* tensioning
vibratory loads, 85; fatigue behavior, 85; effect of preloading anchors on fatigue, 86*f*; rules for avoiding fatigue failure, 86–87. *See also* cast-in-place anchor design

@seismicisolation

washers, 14. *See also* anchor materials
weathering steel, 21–22. *See also* corrosion
welded anchors, 83; examples of design of, 85; headed anchor rods, 83; headed stud anchors, 83; interaction of tensile and shear forces, 85; rebar anchors, 83–84; seismic considerations, 85; shear considerations, 84–85; tension considerations, 84. *See also* cast-in-place anchor design
welding: of anchor extension, 135*f*, 136*f*; of anchor to base plate, 134*f*; of nut to anchor, 134*f*. *See also* repair procedures

zinc coating, cold-applied, 20. *See also* coatings

@seismicisolation