JSSI Construction Procedure Standard for Seismic Isolation Structure

Edited by **The Japan Society of Seismic Isolation**

@seismicisolation

Contents

	Page
1. General	
1.1 Application	1
1.2 Related code and standards	1
1.3 Technical terms	1
2. Planning for construction	
2.1 Quality control plan	6
2.1.1 Quality control system	
2.1.2 Flowchart of quality control	
2.1.3 Documents for construction plan	
2.1.4 Composition of documents for construction plan (Example)	
2.2 Items to be described in document for construction plan	10
2.2.1 Manufacturing of SI devices	
2.2.2 SI clearance	
2.2.3 Piping and electrical wiring	
2.2.4 Planning for temporary works	
2.2.5 Fireproofing	
2.2.6 Construction of footing for SI devices	
2.2.7 Inspection during construction and at completion of SI building	
2.2.8 Important items for construction plan	
2.3 Check sheets for construction plan	15
3. Confirmation of quality control for manufacturing of devices	
3.1 Control of manufacture of isolators	33
3.2 Control of manufacture of dampers	35
3.3 Control of manufacture of baseplates for SI devices	36
3.4 Control of manufacture of pipe joints	41
3.4.1 Pipe joints materials	
3.4.2 Space for pipe joint movement	
3.4.3 Fixed frames for pipe joints	
3.4.4 Product inspection	
3.4.5 Confirming of performance test	
4. Temporary works planning	
4.1 Temporary works planning	47
4.2 Lateral restraints	49
5. Construction of SI layer	
5.1 Acceptance inspection	51
5.1.1 Acceptance inspection for isolators and dampers	
5.1.2 Acceptance inspection for baseplates	
5.2 Construction of SI layer	54
5.2.1 Construction process of SI layer	
5.2.2 Construction process flow	
5.2.3 Bolting for SI devices to structure	
5.3 Storage and protection of SI devices	65
5.4 Filling method for area under baseplate	66
5.5 Safety management	71

@seismicisolation

5.6 Inspection during construction 72
5.6.1 Inspection and accuracy for SI devices and related parts
5.6.2 Inspection of SI layer
5.7 Inspection at completion of SI building 74

6. Setting of pipe joints
6.1 Products 79
6.2 Setting 79
6.3 Important items concerning connections 79

7. Construction of mid-story SI system buildings
7.1 Outline 80
7.2 Important items 81
7.3 Fireproofing of SI layer 83

8. Appendix
8.1 Inspection of devices and performance tests for SI devices 85
8.2 Quality control and performance test of LRBs 86
8.3 Quality control and performance test of sliders 90
8.3.1 Quality control and performance test of slider with elastomer
8.3.2 Quality control and performance test of spherical-surface slider
8.4 Quality control and performance test of dampers 96
8.4.1 Quality control and performance test of U-shape damper
8.4.2 Quality control and performance test of oil damper
8.5 Summary report for SI construction 100

@seismicisolation

1. General

1.1 Application

This standard is applicable to the construction of seismic-isolation layers, their devices and related parts.

The following buildings are subject to this standard:

a) Newly constructed seismically isolated buildings

b) Seismically isolated buildings with devices that are installed beneath the building, or with devices that are installed at an intermediate story of the building.

c) Retrofitted seismically isolated buildings

Notice: The Ministry of Construction in Japan issued Notification 1446, 2000, in the Building Standard Law for seismic-isolation buildings and devices. Manufacturers of seismic-isolation devices are required to obtain the approval of the Minister of Construction.

1.2 Related code and standards

Items that are not described in this standard should be based on one or more of the following standards:

a. "Building Standard Law, Enforcements and Notices" of Japan

b. "Architectural Standard Specification JASS5 Reinforced Concrete Construction", by AIJ*

c. "Architectural Standard Specification JASS6 Steel Structure Construction", by AIJ

d. "Maintenance Standard for Seismic Isolation Building" by JSSI.

* AIJ: Architectural Institute of Japan

1.3 Technical terms

Abbreviations:

CM: construction manager

LRB: laminated rubber bearing

MRF: Manufacturer

SE: structural engineer

SI: seismic-isolation / seismically isolated

@seismicisolation

Technical terms used in this standard are as follows:

1. Devices

1.1 bearing / isolator

The bearing is a device that supports vertical loads, and it is connected to the superstructure and to the substructure. Bearings are designed to deform horizontally while supporting a superstructure, isolating the building from ground vibration. At the same time, the natural period of the structure must be higher.

There are two types of bearings: laminated-rubber, and slider.

・laminated-rubber bearing (LRB / elastomeric isolator)

Laminated-rubber bearings consist of alternate layers of steel plates and rubber sheets. They are capable of supporting large vertical loads, and they have high vertical rigidity. They have low stiffness in the horizontal direction, due to the shear-deformation of rubber and they have the capacity to deform. There are four types of laminated-rubber bearings, with their properties as follows:

・natural laminated-rubber bearing (NRB)

Laminated natural-rubber bearings are the most common type used in SI structures. The relationship between shear strain and shear force becomes relatively linear, which makes NRBs suitable for use in combination with dampers.

・high damping laminated-rubber bearing (HDR)

They are made of synthetic rubber, which has energy-absorption performance for lateral deformation. HDR has both elasticity and damping performance.

・laminated-rubber bearing with lead plug (LpRB)

Lead-plugs inserted in laminated-rubber bearings are also used as isolators, which provide non-linear elasticity and damping function.

・laminated-rubber bearing with steel damper

This is also a laminated-rubber type with hysteretic steel dampers, which has steel rods bolted to flanges of NRB.

1.2 creep

Creep is permanent plastic-deformation by long-term compression stress in LRBs, which support the building. Currently, the level of creep can be predicted by measuring the amount of short-term creep over one or two years. An equation for estimating the amount of creep is extrapolated from the amount of creep over a certain amount of time. By extrapolation of this short-term creep, the amount of long term creep can be predicted. It is usually several percent of the vertical height after 60 years.

1.3 circumference rubber-cover parts

Rubber sheeting used to surround the circumference of isolator parts provides many years of protection to the internal rubber sheets and the steel plates of the laminated-rubber bearings from oxidation, ozone, ultraviolet rays, and water.

@seismicisolation

1.4 slider / sliding bearing

A slider is a device that slides on a plane or curved surface that has a low-friction force.

-sliding material

Sliding material has low friction and is usually PTFE material.

-sliding plates

Sliding plates are made of materials that facilitate the function of the slider. They are made of stainless steel, hard-chrome or steel with special surface-coating.

-slider with elastomer

The properties of natural rubber-based LRBs are effective in the small horizontal-deformation zone. Sliders are bearings that absorb energy of vibration through friction.

1.5 damper

The damper is a device with the capacity to dissipate dynamic energy. Damping function is necessary for SI systems. There are various types of dampers: steel dampers and lead dampers (utilizing metal hysteretic characteristic), viscous dampers and friction dampers. There are also isolators that have damping function, such as high-damping rubber bearings and lead-plugs that are inserted into laminated-rubber bearings. High-damping rubber bearings and lead rubber bearings each provides damping function. (See "bearing / isolator")

2. Construction

2.1 SI layer

The SI layer is the space where SI devices are installed. Also, in this space, there is equipment, such as piping, electrical wiring, and small space for maintenance purposes.

2.2 baseplate for isolator

A baseplate is a plate that connects the isolator (with bolts) to the superstructure and to the substructure.

2.3 grout

Grout is used to fill the space between the baseplate and the footing of the isolator. This is done in order to ensure the transfer of weight from the superstructure. Usually no-shrinkage mortar is used as the grout.

2.4 high-flow concrete

High-flow concrete has a slump-flow value of 60 to 65cm. It is used for foundations that are under the baseplates of isolators (See Chapter 5.4).

2.5 clearance / moat / gap

The space around an SI structure is to allow for movement of the structure during earthquakes. This prevents collision between the structure and the retaining walls or other structures. Generally, this value must be set with an allowance after the response-displacement is calculated by time history response analysis. This space is referred to as clearance, moat, or gap. There are two types of clearances; horizontal space and vertical space, which allow horizontal and vertical displacement in the SI layer during earthquakes.

@seismicisolation

2.6 design clearance
Horizontal clearance must be decided by SE with consideration for the maximum response-displacement, also vertical clearance with consideration for creep and vertical displacement during earthquakes.

2.7 construction clearance
It is generally decided by allowing for construction error in the design clearance. Thus, the actual clearance is more than the design clearance.

2.8 horizontal restraint
Temporary horizontal restraints must be applied to avoid movement of isolators when displacement interferes with the construction of the superstructure. CM should discuss the necessity and details of restraints with the supervisor.

2.9 flexible pipe joint
Flexible pipe
joints are installed in the SI layer and absorb large relative displacement between the superstructure and substructure. Ready-made flexible pipe joints are available for SI buildings.

2.10 inspection
· conditions for inspection
Conditions for inspection of SI devices are generally specified in the inspection plan by the SE, after which they are given to the supervisor.

· inspection during construction
This is an inspection of structures that have an SI system. It should be done during building construction to confirm that values such as horizontal and vertical clearance are sufficient.

· inspection at completion
This is an inspection carried out to check the SI system when a building is completed. In order to maintain SI performance, scheduling of inspections and maintenance are required for SI devices, as well as for horizontal and vertical clearances. Inspection includes measurements, the values of which are very important as initial values for comparison for future measurements. CM must report the inspection results to the building owner.

2.11 test for devices
· product test
This test is a test to confirm the basic performance of SI devices that is conducted by the manufacturer before shipment. Test should be carried out by the factory staff under supervision of SE, regarding appearance and dimensions, and performance (horizontal stiffness, vertical stiffness, equivalent damping factor, etc.) of devices. The number of devices to be tested should be decided by SE.

· prototype test in Japan
Prototype test should be applied to each type of device unit for fundamental performance of device, as specified in Notification 1446, 2000, by the Ministry of Construction.

@seismicisolation

·fundamental performance of LRB

Fundamental performance of LRBs concerns properties such as compression, shear, tensility, dependencies, ultimate states and durability.

2.12 deformation performance of LRB

Deformation performance is expressed as the ratio of the horizontal displacement (δ) to the total thickness of the rubber (H). For example, when lateral deformation is roughly twice the total thickness of the rubber, the deformation ratio is called "200% strain". As each isolator has a different maximum deformation-value, the specifications must be checked carefully before LRBs are ordered.

2.13 fire protection for isolator

When the space of the SI layer is used as a parking area, or the SI layer exists at a mid-story of buildings, isolators should be fireproofed, and must be made to follow the movement of the building during earthquakes. There are several types of fire protection, such as panel type and multi-stage type, etc.

2.14 CM for SI buildings in Japan

JSSI provides training and a qualification test for construction managers for SI buildings. Qualified engineers should work on site to ensure the quality of the SI building.

2.15 notice board of SI building in Japan

A metal sign is installed on the outside wall of the building or near the entrance in a place where it is easy to see in order to draw attention to the fact that SI buildings move during earthquakes. This display of signage is stipulated by Notification 2009, 2000, issued by the Ministry of Construction.

2.16 tracer / orbiter

A tracer is a measuring instrument to record the horizontal displacement of SI buildings during earthquakes. The scribe-needle displacement recorder uses either a stainless steel plate, acrylic plate or aluminum plate.

@seismicisolation

2. Planning for construction

This chapter shows a guideline for planning for construction of SI buildings.

2.1 Quality control plan

CM should understand the quality of the design requirements of SI buildings, decide the appropriate contents and goals, and get approval from the supervisor before beginning construction. Construction of the SI section is a part of this construction plan.

In SI buildings, there are works such as management of SI products and installation of SI devices, which are not in conventional buildings.

In the documents of the execution plan for SI construction, the important items and temporary works plan should be described in addition to the construction procedure, which includes execution, recording, reporting and receiving approval from the supervisor about various inspections.

2.1.1 Quality control system

In construction of SI work, CM, who is responsible for SI structure, should be chosen. CM should have knowledge of SI in order to ensure construction quality of the structure.

CM should make a plan for construction of SI works and ensure construction quality.

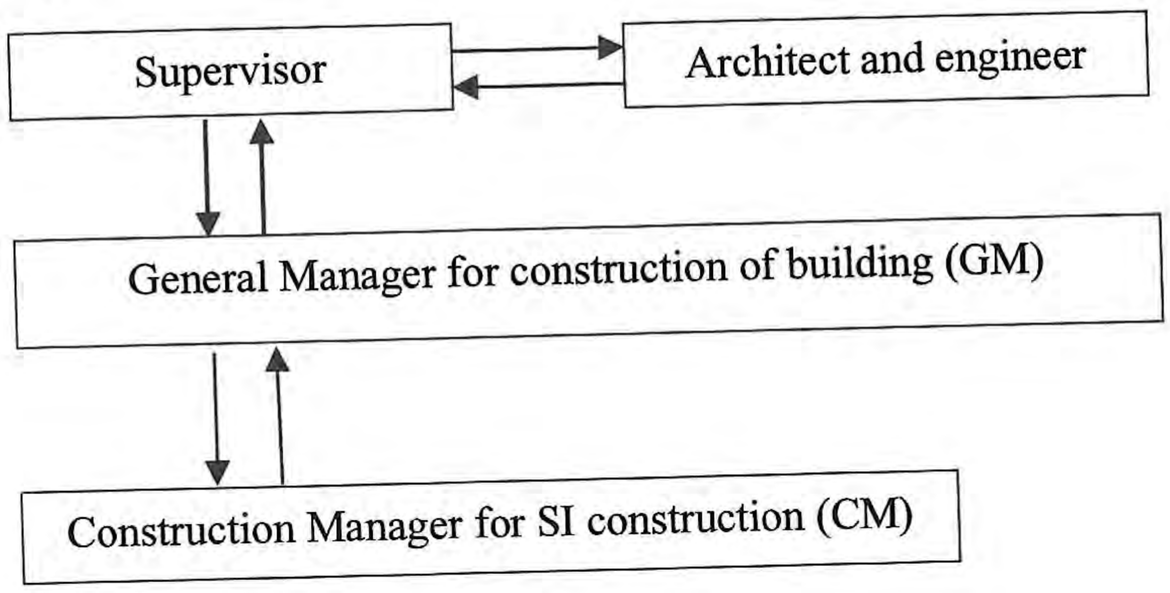

Figure 2.1.1 Quality control system at site (Example)

@seismicisolation

2.1.2 Flowchart of quality control

Figure 2.1.2 shows standard flow for quality control.

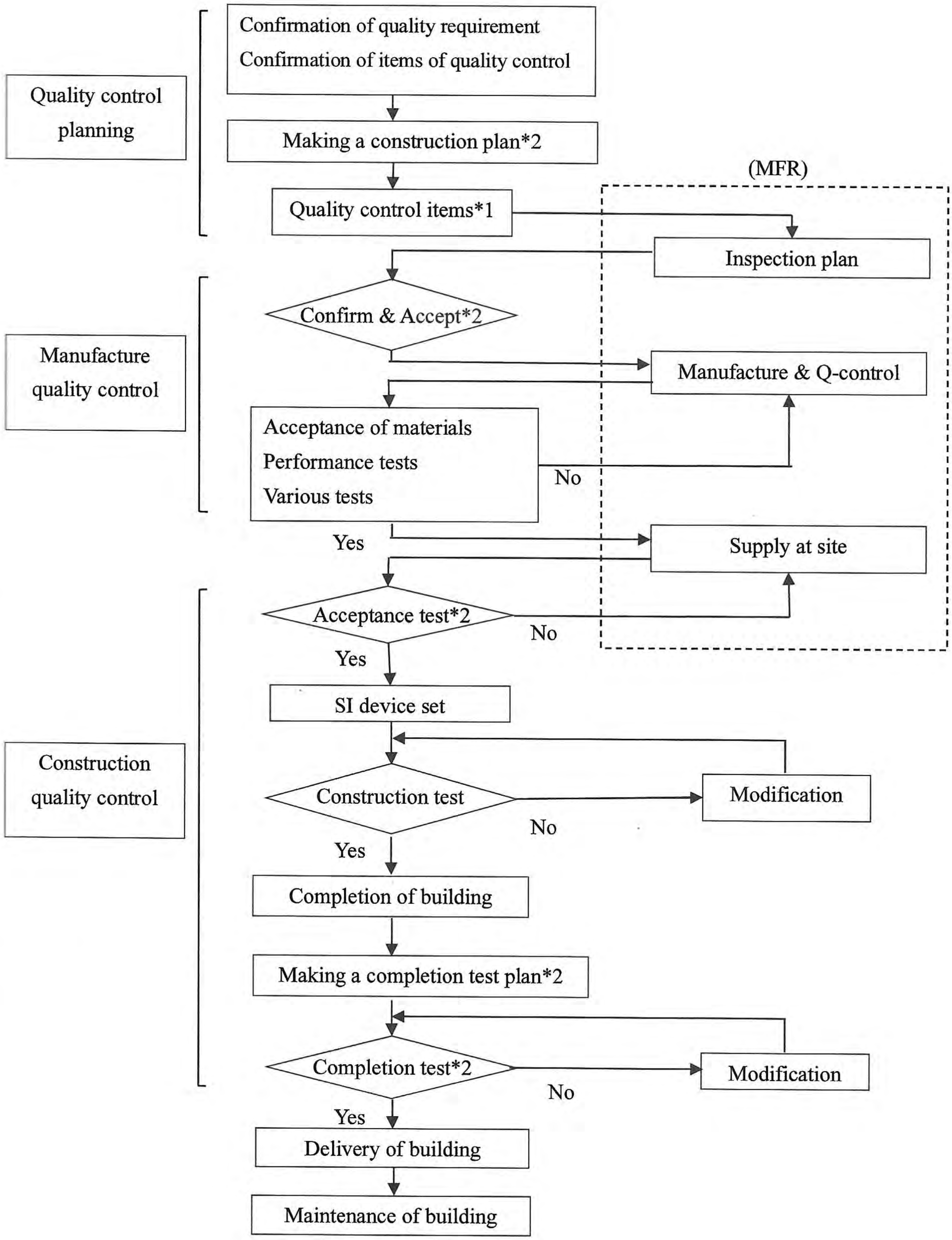

Figure 2.1.2 Quality control of SI buildings

@seismicisolation

Note:
*1 Quality control items of SI devices
a) Types of SI devices
b) Dimension
c) Numbers of devices
d) Arrangement in SI layer
e) Performance values of SI devices
・Horizontal stiffness
・Vertical stiffness
・Equivalent damping factor
・Other property
f) Inspection of SI layer and related parts
*2 Confirmation by CM and acceptance by the supervisor

2.1.3 Documents for construction plan

CM should make a record of completion of items described in the construction plan, submit it to the supervisor, and obtain approval.

For management records, CM refers to Table 2.1.1 and the "Check sheet for SI Construction Quality Control Plan", which is at the end of this chapter.

Table 2.1.1 Documents for construction quality control (Example)

Documents for quality control	Supervisor	CM	MFR
a. Construction plan of SI building	Approve	**	--
b. Summary of production for SI devices and performance tests (1) Isolator (2) Damper (3) Baseplate	Approve	Confirm	**
c. Performance test-report of SI devices (1) Isolator (2) Damper (3) Baseplate	Approve	Confirm	**
d. Performance test-report of pipe joint (1) Dimension (2) Main property	Approve	Confirm	**
e. Inspection report of SI devices at construction	Approve	**	--
f. Inspection plan of SI devices upon completion	Approve	**	--
g. Inspection report of SI devices upon completion	Approve	**	--

Note: ** To make the documents and report to supervisor

@seismicisolation

2.1.4 Composition of documents for construction plan (Example)

The content included in SI construction plan is shown below. When making a construction plan, confirm items described below and in Chapter 2.2.8.

1. General: application, related documents and standards
2. Outline of building procedures and features:
   - Construction outline
   - Construction SI devices
   - SI devices (isolators, dampers, fireproofing, etc.)
3. Quality control:
   - Quality control system
   - Required quality
   - Specification according to design documents
   - Summary of production and inspection
4. Quality control for devices by MFR:
   - Documents for quality control and person(s) in charge
   - Inspection of documents of manufactured devices
   - Items for inspection and allowable values
   - Performance tests and allowable values
5. Acceptance inspection:
   - Inspection items for acceptance at site
   - Countermeasures against malfunction
   - Storage and protection of SI devices
6. Temporary works planning:
   - Fixing of scaffolding
   - Entry to construction site
   - Cranes
   - Lateral restraints
7. Construction works:
   - Pouring concrete
   - Baseplates and reinforcing bars
   - Grouting
   - Installing devices
   - Setting pipe joints
8. Inspection plan for SI devices:
   - Execution of inspections during construction and at completion
   - Inspection items and allowable values
   - Countermeasures against malfunctions
   - Person(s) in charge
9. Safety management:
   - Unloading of SI devices and their installation

Appendix

1. Check sheet for construction quality control: check items of documents, countermeasures against malfunctions, person(s) in charge
2. Fill out the record sheet for inspection

A planning of mock-test for filling concrete under baseplates should be prepared for one of the construction tests.

@seismicisolation

2.2 Items to be described in document for construction plan

Document for construction plan shows production procedures for SI devices, their installation method, temporary works plan considering the effect of an earthquake, and construction methods.

2.2.1 Manufacturing of SI devices

CM should assure that final SI products are made according to design documents. CM should also confirm "Instructions for manufacture of SI devices and their inspection", and then should obtain approval of supervisor. CM should describe items to be addressed by regarding production and inspection by MFR.

(1) Quantity and types of SI devices

CM describes the type of SI member, baseplate and product name and quantity of each manufacturer in the document for construction plan.

(2) Quality control items for construction

CM describes inspection items, frequency of inspection, and criteria of specifications in the document for construction plan. The quality control items are material inspections, appearance inspections, dimensional inspections, performance tests, etc.

(3) Directions for product inspection and performance tests by MFR

CM directs MFR of SI devices to reflect quality control items that are described in the document in the manufacturing inspection procedure.

2.2.2 SI clearance

In order to secure the design clearance indicated in the design document at completion, CM describes in the document for construction plan clearance-values considering construction-errors, shrinkage of concrete due to drying, expansion and contraction of SI building due to temperature change.

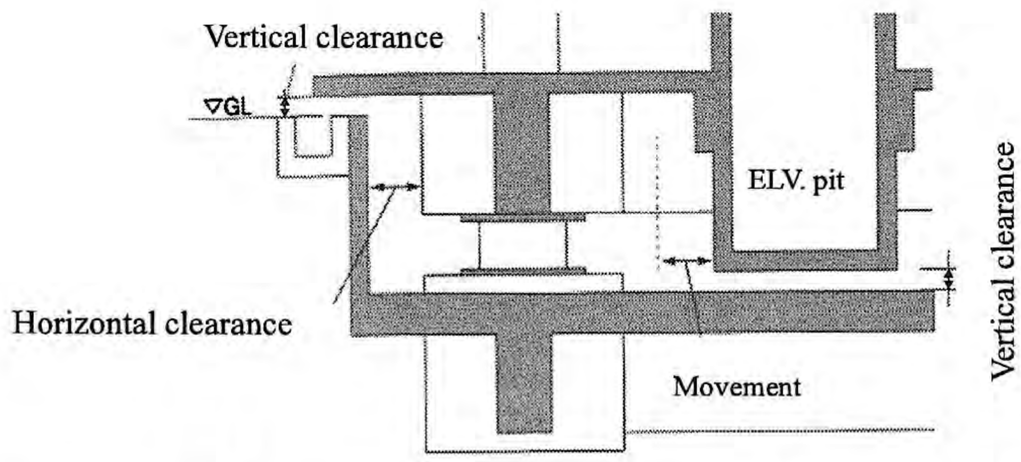

Figure 2.2.1 Horizontal and vertical clearance in SI layer

(1) Confirmation of horizontal clearance in design

Horizontal clearance in design includes maximum response-displacement in the design of SI building, plus a margin. If thermal expansion and drying are included in design clearance, CM should describe clearance values in the document for construction plan after consultation with the supervisor.

@seismicisolation

(2) Confirmation of vertical clearance in design
Vertical clearance in design includes maximum displacement in the design of SI building, creep displacement, expansion and contraction of LRB due to temperature change, plus a margin in the vertical direction. CM describes vertical clearance in the document for construction plan after consultation with the supervisor.

(3) Clearance measurement
CM describes clearance measurement in the document for construction plan. Measurements are carried out through the use of measurement marks during construction and after completion.

(4) Clearance and zone of movement of pipe joints
Usually flexible joints and sufficient lengths of wiring are provided for piping and electrical wiring in SI layer. They occasionally need to move in a three-dimensional direction when horizontal or vertical displacement occurs during earthquakes. In order to avoid contact of structural frame and piping, horizontal or vertical clearances should be ensured. CM describes this in the abovementioned document.

2.2.3 Piping and electrical wiring
CM describes management of product manufacturing and construction methods related to piping and electrical wiring.

(1) Selection of pipe joints
Pipe joints are selected based on the amount of allowable movement in the design, and on their use. These are described by CM in the document for construction plan.

(2) Ensure space for movement of pipe joints
Layout must be such that there is no interference of pipe joint movement. The said movement must be described in the construction plan.

(3) Specification of fixed frames for pipe joints
In order to ensure following ability of pipe joint, an installation specification should be determined.

(4) Plan for electrical wiring
Electrical wiring should have sufficient length to allow its required movement. In the case of high-voltage wiring, CM describes the specification in the document for construction plan after consultation with supervisor and electric power company.

2.2.4 Planning for temporary works
SI buildings are generally constructed to function as an SI structure even during construction. A plan of temporary works should be performed with the assumption that there will be horizontal deformation of SI layer due to earthquakes or winds during construction.

(1) Scaffolding plan
Scaffolding is planned so that it follows horizontal displacement of SI structure, so as not to collapse against the displacement, or planned to be supported by the superstructure. CM describes scaffolding plan in the document for safety construction plan based on assurance during earthquakes.

@seismicisolation

(2) Vehicle entry plan
Working road or deck for construction vehicles must support the weight of vehicle.

(3) Crane plan
Tower crane will be set in the substructure or in the superstructure. CM makes crane plan in consideration of the natural period or deformation amount of SI building during construction, including the set position. The foundation of construction of the lift is supported by the superstructure. CM describes the abovementioned in the document for construction plan.

(4) Lateral restraints
If horizontal restraints of SI layer are adapted, there is a possibility that they will affect the superstructure during earthquakes. Specifications for restraints should be decided after consultation with supervisor. For superstructure of steel construction, horizontal restraints must be planned to avoid causing horizontal deformation, tilting and twist of SI devices during steel construction works. CM describes the abovementioned in the document for construction plan.

2.2.5 Fireproofing
Specifications and methods of setting of fireproofing should be carried out with consideration for maintenance and scheduled inspections of isolators. Isolators should be inspected before the setting of fireproof coverings.

(1) Confirmation of space for movement
When the fireproof covering material is deformed horizontally during earthquakes, CM should confirm on the drawing that neither the structural frame nor equipment will interfere with the fireproofing.

(2) Installation time
Subduction of LRB is induced as the superstructure constructed, and installation time for fireproofing is planned before completion of the building. Inspection at completion for SI devices must be done before installation of fireproofing. CM describes the process in the document for construction plan.

(3) Moving materials
After confirming the entry points for materials such as piping and wiring to SI layer, CM describes in the document for construction plan the route for movement materials to the unloading points.

(4) Construction
CM describes the construction methods in the document for construction plan.

2.2.6 Construction of footing for SI devices
CM describes the construction method of foundation for the mounting devices according to design specifications.

(1) Rebar arrangement of footing for SI devices
Beneath the baseplate of SI devices, there are long-length nuts, studs, anchor bolts, etc. that are attached, which tend to interfere with the rebar in the footing, or with the rebar in the pile head. CM confirms rebar arrangement through drawing details.

@seismicisolation

(2) Filling process beneath baseplate
The space below the lower baseplate of SI devices must be filled completely with concrete. For each type of foundation, shape and size of baseplate, and density of rebar in the footing, the filling material is described in the document for construction plan.

(3) Confirming test for filling ability
The filling procedure of the space below the baseplate must be confirmed at the site under the same conditions as the actual construction. The judgment criteria for the filling results are described in the document for construction plan.

(4) Setting baseplate
For installation of the baseplate, positional precision, inclination and torsion angle of SI devices must be maintained within management values. A temporary fixing method that will prevent movement in any of the parts as concrete is poured in the footing must be employed.

2.2.7 Inspection during construction and at completion of SI building
Regarding the installation of SI devices, CM should assure accuracy of installation and should manage construction of SI layer. In the document of construction plan, CM should describe inspection items, standard values for management, inspection during construction and inspection at completion, and should choose inspectors, all of which must be by approved by the supervisor.

(1) Accuracy of setting devices
CM should assure the accuracy of horizontal position and that there is no inclination or twist of the lower baseplate. Because corrective action cannot be taken after concrete is poured, it is important to assure accuracy and proper fixing of baseplate before concrete is poured. In the document for construction plan, CM describes management values, time and the method of fixing the baseplate.

(2) Clearance
CM should assure SI clearance based on the design documents.

(3) Inspection at completion of SI layer
Inspection at completion is usually conducted by constructor. The results of this inspection are necessary as initial values for future periodic inspections. In the document for construction plan, CM describes matters of the inspection at completion with approval of supervisor.

(4) Maintaining reports of inspection at completion
Building owners are obliged to provide regular maintenance to entire of the building after completion. In the document for construction plan, CM instructs that the inspection report at completion must be kept by the building owner. The plan is then submitted to the supervisor, and to the building owner or the building manager.

2.2.8 Important items for construction plan
CM should describe the following items in the document for construction plan after discussion with the supervisor:

(1) Confirmation of details of each connection-part in comprehensive drawing
For construction of SI buildings, potential displacement due to earthquakes should be taken into consideration for planning of pipe joints and wiring. In addition, lighting and ventilation

@seismicisolation

for maintenance of the isolation devices should also be planned. The methods of carrying and the routes of up-and-down and back-and-forth movements are also decided for SI devices and related equipment.

(2) Countermeasures against shrinkage of the structure due to drying

In an SI structure, isolators at the corners of the building could be deformed toward the center of the building due to contraction of the superstructure caused by shrinkage of concrete. Also, the isolators could be deformed horizontally due to expansion and contraction of the superstructure, which is caused by temperature change. Setting contraction bands or using expansive concrete is effective as countermeasures against such deformation.

It is advisable to confirm in advance with the supervisor the effect of shrinkage on finishing, then CM describes the abovementioned in the document for construction plan.

(3) Countermeasures against rain of SI layer

Protection of SI devices against rain and condensation should be planned. It is required to choose an effective drainage pump at SI layer to prevent the possibility of flooding during construction.

(4) Ventilation of SI layer

If seals are affixed to vertical clearances of SI layer, condensation is generated due to stagnation of air. This condition can affect the durability of isolators. Instead of seals these clearances should be protected with an air permeable material, such as an insect net.

(5) Protection for SI devices from welding sparks

CM confirms that welding sparks cannot come in to contact with any SI devices.

(6) Protection for oil dampers

Oil dampers are installed after completion of the superstructure. However, they are brought to the SI layer along with isolators and remain there for their installation. In the document for construction plan, CM describes protection methods for oil dampers and the lifting plan for their installation.

(7) Secure levelness of concrete for structure

Sliders are intended to slide during earthquakes. However, if the concrete were not level, isolators would be dislocated, rendering the system useless.

(8) Others

a) Signage

A notice board is installed on the outside wall of the building or near the entrance in a place where it is easy to see to draw attention to the fact that SI buildings move during earthquakes. CM describes this sign in the document for construction plan. The purpose of the sign is to inform people that the building moves during earthquakes.

@seismicisolation

This display of signage is stipulated by Notification 2009, 2000, issued by the Ministry of Construction.

This building is a seismic isolation structure.

During earthquakes this building will move as much as 50 cm.

An isolation system installed in the building absorbs vibration energy during earthquakes.

< Contact phone & address >

Figure 2.2.2 Form of signage

b) Instruments for measurement of displacement

These consist of plumb bobs, tracers and seismographs. Material of the recording disk is stainless steel, aluminum or acrylic resin. CM describes these devices in the document for construction plan.

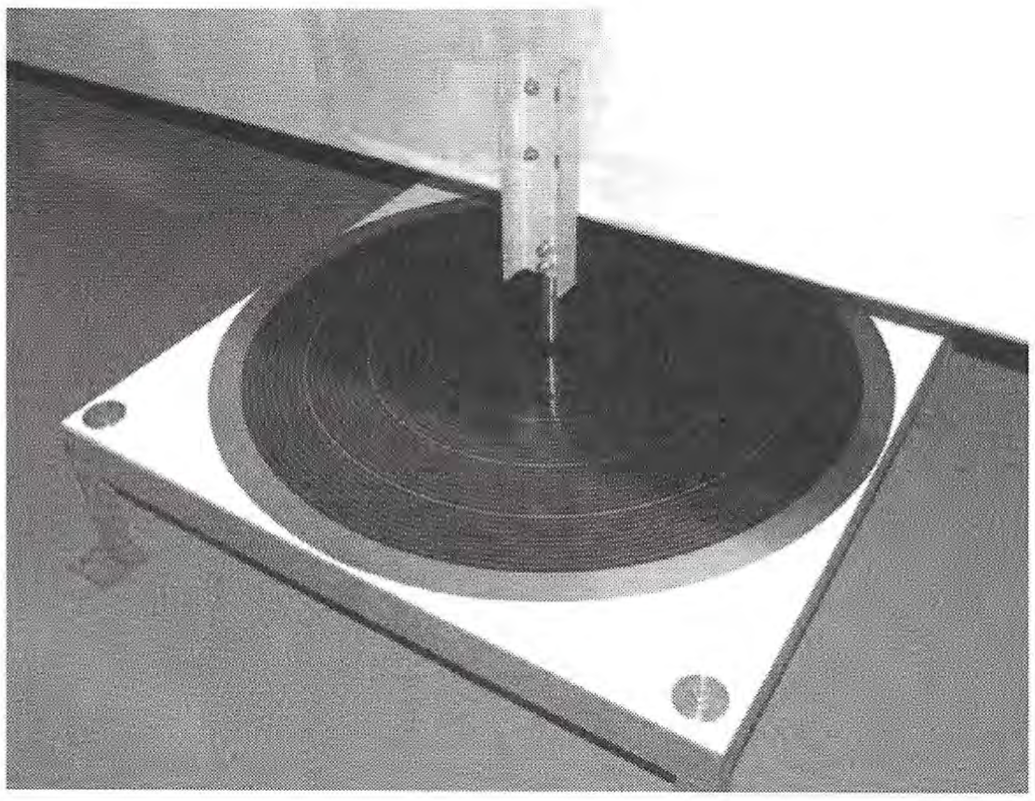

Photo 2.2.1 Tracing disk for displacement

2.3 Check sheets for construction plan

Below are the examples of check sheets that are used at the time of planning the construction as an aid in making the on-site construction plan.

CM is able to make a construction plan by referring to applicable ranges that are described in these check sheets.

Note that items described in these check sheets, management values, etc. are only guidelines. CM sets items to check, management values, etc. according to implementation plan of the structure.

@seismicisolation

PIC: Person(s) in charge SPV: supervisor GM: General manager CM: Construction manager SE: Structural engineer

Work	Work process	Management instructions						Record	PIC		
	Contents	Item	Management requirement	Period	Method	Frequency	Treatment of defects		SPV	GM	CM
1. Planning	1.1 Making of construction plan	Those in design documents	Confirm important items • Design clearance • MFR of SI devices • Specifications of SI devices • Required performance values • Management items for SI devices • Management values for SI devices • Temporary restraints of isolators • Construction procedures • Filling method beneath baseplates • Management items at construction • Management accuracy of construction • Tightening torque for joint bolts • Inspection items at completion • Management values of inspection at completion • Temporary works plan • Safety management	Beginning of planning	Collation of construction plan with design documents		Remediation	Construction plan			

@seismicisolation

	Work process	Management instructions						Record	PIC	
Work	Contents	Item	Management requirement	Period	Method	Frequency	Treatment of defects		SPV	GM / CM
1. Planning	1.2 Making of comprehensive drawings	SI performance	Assure required performance of design documents • Clearance and movable zone of piping • Carrying route and space for exchange of SI devices • Jack-up position	After comprehensive drawings	Collation of construction drawings with design documents	All drawings	Remediation	Comprehensive drawings		
	1.3 Making of construction drawings	SI performance	Assure required performance of design documents • Arrangement of anchor bolts of baseplate and rebar of footing • Restraint of SI device • Fireproofing for isolators	After construction drawings	Collation of construction drawings with design documents	All drawings	Remediation	Construction drawings		
	1.4 Temporary works plan	Safety during construction	Assure safety of devices or structures as temporary works in case of earthquake during construction • Setting up of scaffolding • Setting up of tower crane • Setting up of lifts • Carrying route • Temporary fixing-jigs for isolators • Storage and curing of SI devices	Beginning of temporary works	Structural calculations	—	Remediation	Temporary works plan		
	1.5 Planning for safety	Safety plan	Assure safety of workers at site in case of earthquake	Before commencement of construction	—	—	Remediation	Safety plan		

@seismicisolation

Work	Work process: Contents	Management instructions: Item	Management requirement	Period	Method	Frequency	Treatment of defects	Record	PIC: SPV	PIC: GM	PIC: CM
2. Product management	2.1 Management of SI devices	Instruction manual for products and for inspection methods	Confirm contents, including management values • Standards for devices • Manufacturing division • Stipulated use of materials • Manufacturing methods of device • Inspection items, inspection methods, management values • Performance test, inspection in the presence of SE • Report from MFR • Protection of devices for shipping	Before commencement of construction	Collation of construction plan with design documents	Each delivery	Remediation	Products instructions			
		Inspection at presence	Confirm contents of product instructions and inspection methods • Types, amount • Appearance, dimensions • Performance values • Anti-corrosion • Indication of device	After production	Collation of product instructions with design documents	As specified in product instructions	Remediation	• Inspection report from MFR • Product test report			
		Acceptance inspection	Confirm quality as specified in design documents and product instructions • Indication of devices • Protection • Deformation, dents or scratches • Anti-corrosion	At delivery	Collation of product instructions, inspection report from MFR and product test report with design documents	Each delivery		Report of acceptance inspection			

@seismicisolation

			• Anti-corrosion						

Work	Work process	Management instructions						Record	EQ
	Contents	Item	Management requirement	Period	Method	Frequency	Treatment of defects		S B O
2. Product management	2.2 Management of baseplate	Product instructions	Confirm contents and management values • Scope of application • Manufacturing division • Stipulated use of materials • Manufacturing methods of devices • Inspection items, inspection methods, management values • Documents from MFR	Before commencement of construction	Collation of construction plan with design documents	Each delivery	Remediation	Product instructions	
		Inspection at presence	Confirm contents in product instructions • Type, amount • Appearance, dimension • Anti-corrosion	After completion of product	Collation of product instructions with design documents	As specified in product instructions	• Remediation • Reproduce	• Inspection report from MFR • Product test report	
		Acceptance inspection	Confirm quality as specified in design documents and product instructions • Indication of baseplate • Protection • Deformation, dents or scratches • Anti-corrosion • Type, amount and standard of connecting bolts	At delivery of baseplate	Collation of product instructions, inspection report from MFR and product test report with design documents	Each delivery	Remediation	Acceptance record	

@seismicisolation

	Work process	Management instructions						Record	PIC		
Work	Contents	Item	Management requirement	Period	Method	Frequency	Treatment of defects		SPV	GM	CM
2. Product management	2.3 Management of pipe joints	Those in design documents	Select pipe joints as specified in design documents • Flexibility • Durability • Type of pipe joints • Usage of pipe joints • Anti-corrosion	When ordering	Collation of construction plan for pipe joints with design documents	Each order	Reselect				
		Product inspections	Confirm specifications • Performance test • Dimensions • Situation of rust prevention	After completion of product	Confirmation of report of performance test	Each order	Reorder	Inspection report from MFR			

@seismicisolation

Work		Work process: Contents	Management instructions: Item	Management requirement	Period	Method	Frequency	Treatment of defects	Record	PH: SPV	PM	PO
3. Filling under baseplate	3.1 Confirmation of filling of high-flow concrete	3.1.1 Specifications of high-flow concrete	Mixture • Design strength • Water-cement ratio • Slump flow • Air-entraining and range water-reducing admixture	Confirm concrete mixture • At least design strength • Less than or equal to 40% • 60cm • Viscosity	When receiving documents for arrangement	Collation of specifications for high-flow concrete with design documents	—	Remediation	Mixing plan			
			Mixture test • Strength • Slump flow • 50cm flow time • Bleeding • Flow loss • Content of chloride	Assure workability for filling • More than design strength • 60cm±5cm • 3 to 8 seconds • Small amount • Management value at 90min in summer, 120min in winter • Less than or equal to 0.3kg/m^3	Before mixture test	By CM	Each mixture	Rearrange	Report of mixture test			
		3.1.2 Making of footing for mock-up test	Selection of baseplates Number of mock-up test	As specified in design documents	During planning	Consultation with SE and SPV	—	Replan	Plan for filling performance test			
			Manufacture of baseplate Footing for mock-up test	Same type as specified in design documents		Collation of product drawings with design documents	—	Replan				

@seismicisolation

Work		Work process: Contents	Management instructions: Item	Management requirement	Period	Method	Frequency	Treatment of defects	Record	PIC: SPV	PIC: GM	PIC: CM
3. Filling under baseplate	3.1 Confirmation of filling of high-flow concrete	3.1.3 Planning for filling	Method of concrete placement	Confirm appropriate method	During planning	Consultation with SE and SPV	—	Replan	Plan for filling performance test			
			Management value for filling percentage	As specified in design documents								
			Methods of measurement of filling percentage	Appropriate measurement methods		By CM and SPV						
			High-flow concrete	Assure management values • Slump flow • 50cm flow time • Air content • Water content • Chloride content • Test specimen		By CM	Each test	Replan				
		3.1.4 Evaluation for filling	Filling percentage	Satisfy management values	2 days after filling	Calculation of filling percentage	Each test	Retest	Filling test report			
	3.2 Confirmation of filling of grout	3.2.1 Grout specifications	Grout material • Compressive strength • Shrinkage • Fluidity • Bleeding	Confirm appropriate grout material • More than strength of footing • No shrinkage • As specified • Small amount	During planning	Collation of grout specifications with design documents	—	Reselect	Document for filling plan			

@seismicisolation

Work		Work process: Contents	Management items: Item	Management requirement	Period	Method	Frequency	Treatment of defects	Record	FH: 5	6	7
3. Filling under baseplate	3.2 Confirmation of filling of grout	3.2.2 Making of footing for mock-up test	Selection of baseplates	As specified in design documents	During planning	Consultation with SE and SPV	—	Reselect	Document for filling plan			
			Number of mock-up test									
			Manufacturing of baseplate	Same type as specified in design documents		Collation of product drawings with design documents	—	Replan				
			Footing for mock-up test									
		3.2.3 Planning for filling	Treatment of laitance	Confirm appropriate treatment of laitance	During planning	By CM with SPV	—	• Replan • Remake	Document for filling plan			
			Method of filling with grout	Confirm appropriate method								
			Management value of filling percentage	As specified in design documents								
			Filling measurement	Appropriate measurement								
			Management of grout mixture • Water • Flow time with J-funnel • Temperature of grout • Working time • Compressive strength	Assure management values • Less than or equal to value designated by MFR • Less than or equal to value designated by MFR • Less than or equal to value assured by MFR • Less than or equal to value designated by MFR • More than design strength			Each test					
			Estimated temperature during filling	Protective covering required when 5℃ or less		Predict from meteorological forecast		Replan				
		3.2.4 Evaluation of filling	Filling results	Satisfy management values	2 days after filling	Calculation of filling percentage	Each test	Retest	• Filling-test reports • Filling plan			

@seismicisolation

Work		Work process	Management instructions						Record	PIC
		Contents	Item	Management requirement	Period	Method	Frequency	Treatment of defects		SPV / GM / CM
4. Management of SI portion	4.1 Preparations	4.1.1 Confirmation of position	• Position of SI devices • Position of baseplates	• As specified in construction drawings • See chapter 3.3 for details	When marking	Marking tape	Before construction of SI portion	Remediation	Check sheet	
			Levelness	• Measure difference between bench mark and level of baseplate • See chapter 3.3 for details	When setting of benchmark	Sprit level				
	4.2 Rebar and anchor frame under SI system	4.2.1 Rebar of footing	Type of reinforcement, diameter, number of rebar, arrangement pitch	As specified in design documents and rebar arrangement drawings	When setting	Visual	All	Remediation	• Check sheet • Photograph	
			Space between lower baseplate and top of footing	Heavy nuts, anchor bolts, anchor frames and studs of lower baseplate do not interfere with rebar		• Visual • Collation of template with lower baseplate				
			Height of rebar	Assure appropriate thickness of cover concrete		• Visual • Sprit level				
		4.2.2 Setting of anchor frame	• Setting position • Height from base to top of rebar	As specified in design documents and rebar and rebar arrangement drawings	When setting	• Visual • Sprit level	All	Remediation	• Check sheet • Photograph	
			Arrangement of rebar within anchor frame	Anchor frame does not interfere with rebar		Visual				
			Stability	Securely fixed		Visual and tactile		Refix		
		4.2.3 Setting of forms	Flow-out holes for concrete	Assure that concrete can flow through	When setting form	Visual	All	Remediation	• Check sheet • Photograph	
	4.3 Setting of lower baseplate	4.3.1 Acceptance of lower baseplate	MFR name, type and product number	As specified in delivery schedule	At delivery	Collation of invoice with statement of delivery	All	Reject and demand new devices	• Check sheet • Photograph	
			Scratches, corrosion	No scratches, corrosion		Visual	At least one device from each delivery	Remediation		
			Local deformation and dents	No irregularities that could affect setting		• Visual and tactile • Ruler		Reject and demand new devices		
			Protection	• As specified in product instructions • No damage on protection materials		Visual		Provide proper protection		

@seismicisolation

	4.3 Se			• No damage on protection materials						

Work		Work process Contents	Management instructions Item	Management requirement	Period	Method	Frequency	Treatment of defects	Record	FH 6	8	0
4. Management of SI portion	4.3 Set lower baseplate	4.3.2 Setting of lower baseplate	• Horizontal accuracy • Positional accuracy	Less than or equal to value specified in construction plan	When setting	• Sprit level • Ruler	All	Reset	• Check sheet • Photograph			
			Stability	Securely fixed		•Visual and tactile						
	4.4 Acceptance of concrete	4.4.1 Condition of concrete	• Slump flow • 50cm flow time • Air content • Water content • Content of chloride	Less than or equal to value specified in mixing plan	When pouring of concrete		Once a day and once every 150m^3 of concrete	Remix	Inspection reports			
		4.4.2 Strength of concrete	Test piece	More than design strength	When pouring concrete	Confirmation of inspection report	Once a day and once every 150m^3 of concrete	Reconstruction	Inspection reports			
		4.4.3 Delivery time	Workability	Assure workability until the end of pouring	Each arrival of concrete mixing truck			Reject and demand new batch	—			
	4.5 Fill under lower baseplate	4.5.1 Working time	Pouring time	Pour batches within specified time to maintain workability (90min in summer, 120min in winter)	Each arrival of concrete mixing truck	Confirmation before delivery	All	Reject and demand new batch	—			
		4.5.2 Treatment of concrete joints	Joining condition	• Remove laitance • Clean joining parts	Before filling	Visual	All	• Remediation • Reclean	• Check sheet • Photograph			

@seismicisolation

Work		Work process	Management instructions						Record	PIC		
		Contents	Item	Management requirement	Period	Method	Frequency	Treatment of defects		SPV	GM	CM
4. Management of SI portion	4.5 Filling under lower baseplate	4.5.3 Filling concrete	Method	As procedure in test results	During filling	Visual	All	Revision of procedure	• Check sheet • Photograph			
			Confirmation of filling	Assure that concrete flows out roughly equally through air-release holes and circumference of baseplate				Remediation				
			Height of filling	As specified in filling plan and construction drawings		• Visual • Ruler						
			Finishing of pour hole	Assure that concrete is level with top of hole		Visual						
		4.5.4 Protection of surface of concrete	Appropriate protection method	As specified in filling plan	After filling	Visual	All	Remediation	• Check sheet • Photograph			
	4.6 Grouting	4.6.1 Treatment of concrete joints	Joining condition	• Remove laitance • Clean joining parts	Before filling	Visual	All	Recleane	• Check sheet • Photograph			
		4.6.2 Filling of concrete	Height of filling	Assure appropriate space for grout	When pouring	• Visual • Ruler	All	Remediation	• Check sheet • Photograph			
			Top of concrete	Levelness		Visual						
			Joining condition	• Remove laitance • Clean joining parts	After pouring			Reclean				
			Top surface of lower baseplate	No concrete				Cleaning				

@seismicisolation

Work		Work process Contents	Management instructions Item	Management requirement	Period	Method	Frequency	Treatment of defects	Record	RO
4. Management of SI portion	4.6 Grouting	4.6.3 Grout mixture	Type, amount	As specified in grouting plan	At delivery	Collation of order form with statement of delivery	Every delivery	Reject and demand new batch	• Check sheet • Statement of delivery	
			Management of grout mixture • Water content • Flow time with J-funnel • Temperature • Working time • Compressive strength	Assure management values • Less than or equal to designated value by MFR • Less than or equal to designated value by MFR • Less than or equal to assured temperature by MFR • Less than or equal to designated time by MFR • More than design strength	When mixing	By CM	Before every mixture	•Remediation •Heating or cooling	• Check sheet • Photograph •Inspection reports	
		4.6.4 Grouting	Method	As procedure in test results	When filling	Visual	All	Revision of procedure	• Check sheet • Photograph	
			Confirmation of filling	Assure that concrete flows out roughly equally through air-release holes and circumference of baseplate	When pouring			Remediation		
			Presumed lowest temperature at the time of hardening	Protective covering required when 5℃ or less	Day before grouting	Presume from weather forecast	Every grouting	Replan		
			Finishing of pour hole	Assure that concrete is level with top of hole	When grouting	Visual	All	Remediation		

@seismicisolation

Work		Work process	Management instructions						Record	PIC		
		Contents	Item	Management requirement	Period	Method	Frequency	Treatment of defects		SPV	GM	CM
4. Management of SI portion	4.7 Installation of isolators	4.7.1 Acceptance of isolators	MFR name, type, product number	As specified in delivery plan	At delivery	Collation of invoice with statement of delivery	All	Reject and demand new device	• Check sheet • Photograph			
			Protection	• As specified in product instructions • No scratches or peeling		Visual		Provide proper protection				
			Deformation, dents or scratches of isolators	No deformation, dents or scratches		• Visual • Ruler	At least one device from each delivery	Reject and demand new device				
			Deformation, dents or warping of flanges or sliders	No irregularities that could affect setting		• Visual • Ruler		Remediation				
			Scratches and corrosion on painted parts	No scratches or corrosion		Visual		Remediation				
		4.7.2 Installation of isolators	• Horizontal accuracy • Positional accuracy	Less than or equal to value specified in construction plan	At installation	• Sprit level • Ruler	All	Reinstall	• Check sheet • Photograph			
			Stability	Tighten with torque wrench as specified in construction plan		Torque wrench		Retighten				
			Marks for connecting bolts	Marked appropriately	After tightening	Visual		Re-mark				
		4.7.3 Protection of isolators	Protection of isolators after installation	Protection methods as specified in construction plan	After installation	Visual	All	Provide proper protection	• Check sheet • Photograph			
	4.8 Installation of dampers	4.8.1 Acceptance of dampers	MFR name, type, product number	As specified in delivery schedule	At delivery	Collation of invoice with statement of delivery	All	Reject and demand new devices	• Check sheet • Photograph			
			Protection	• Protection methods as specified in construction plan • No scratches or peeling		• Visual		Provide proper protection				
			Deformation, dents or scratches of dampers	No deformation, dents or scratches		• Visual • Ruler	At least one device from each delivery	Reject and demand new devices				
			Deformation, dents or warping of flanges and sliders	No irregularities that could affect installation								
			Scratches and corrosion on painted parts	No scratches or corrosion		Visual		Remediation				

@seismicisolation

			Scratches and corrosion on painted parts	No scratches or corrosion						

Work		Work process Contents	Management items: Item	Management requirement	Period	Method	Frequency	Treatment of defects	Record	FY 6	FY 7	FY 8
4. Management of SI portion	4.8 Installation of dampers	4.8.2 Installation of dampers	• Horizontal accuracy • Positional accuracy • Installation positions	Less than or equal to value specified in construction plan	At installation	• Sprit level • Ruler	All	Reinstall	• Check sheet • Photograph			
			Stability	Tighten with torque wrench as specified in construction plan		Torque wrench		Retighten				
			Marks for connecting bolts	Marked appropriately	After tightening	Visual		Re-mark				
		4.8.3 Protection of dampers	Protection of dampers after installation	Protection methods as specified in construction plan	After installation	Visual	All	Provide proper protection	• Check sheet • Photograph			
	4.9 Setting of upper baseplate	4.9.1 Acceptance of upper baseplate	MFR name, type and product number	As specified in delivery schedule	At delivery	Collation of invoice with statement of delivery	All	Reject and demand new devices	• Check sheet • Photograph			
			Scratches and corrosion on painted parts	No scratches or corrosion		Visual	At least one baseplate from each delivery	Remediation				
			Deformation, dents or warping	No irregularities that could affect setting		• Visual • Ruler	All	Reject and demand new devices				
			Anchor bolts for steel frame of superstructure	No deformation or scratches of connecting parts		Visual		Remediation				
			Protection	• Protection methods as specified in construction plan • No scratches on, or peeling of protection material			At least one baseplate from each delivery	Provide proper protection				
		4.9.2 Installation of upper baseplate	• Horizontal accuracy • Positional accuracy	Less than or equal to value specified in construction plan	At installation	• Sprit level • Ruler	All	Reinstall	• Check sheet • Photograph			
			Stability	Tighten with torque as specified in construction plan		Torque wrench		Retighten				
			Marks for connecting bolt	Appropriately marking	After tightening	Visual		Re-mark				

@seismicisolation

Work		Work process	Management instructions						Record	PIC		
		Contents	Item	Management requirement	Period	Method	Frequency	Treatment of defects		SPV	GM	CM
5. During construction of superstructure	5.1 Steel-frame construction work	5.1.1 Installation of jig to prevent deformation	Appearance	As specified in construction plan, construction drawings and product drawings	When setting	Visual	All	Reinstall	• Check sheet • Photograph			
		5.1.2 Anchor bolts	Stability	• Tighten securely • No deformation, dents or warping	Before erection of steel frame	Visual	All	Retighten	• Check sheet • Photograph			
			Levelness of nuts	As specified in design documents, construction drawings and product drawings				Remediation				
		5.1.3 Removal of jig	Appearance	Complete removal and carrying away	After removal of support of SI layer	Visual	All	Remove	• Check sheet • Photograph			
	5.2 Management of SI layer after construction of SI portion	5.2.1 Isolators	• Horizontal displacement • Vertical displacement	Less than or equal to value specified in construction plan	After completion of SI layer	• Vernier caliper • Sprit level	Indicated parts	Decide after discussion between SE and MFR	• Check sheet • Photograph			
		5.2.2 Protection of SI devices	Protection	• As specified in product summary • No damage or peering of protection material	After completion of SI layer	Visual	All	Provide proper protection	• Check sheet • Photograph			
		5.2.3 Clearance/gap/ moat	Design clearance	Assure design clearance	After completion of SI layer	Ruler	All	Remediation	• Check sheet • Photograph			
		5.2.4 • Flexible pipe joint	Installation method	Fixed at appropriate position as specified by MFR	At installation	Visual	All	Remediation	• Check sheet • Photograph			
		• Piping	Clearance for piping	Assure clearance between piping, cables and structure	When tightening							

@seismicisolation

Work		Work process Contents	Management items: Item	Management requirement	Period	Method	Frequency	Treatment of defects	Record	PIC
6 Before inspection at completion	6.1Inspection of SI devices	6.1.1 Protection of devices	Removal of protection	Complete removal of protection	Before inspection at completion	Visual	All	Removal	• Check sheet • Photograph	
			Permanent protection for sliders	Complete setting of permanent protection				Provide proper protection		
		6.1.2 Appearance of devices	Scratches, cracks, missing parts, deformation	No irregularities that could affect performance of SI system	Before inspection at completion	• Visual and tactile • Ruler	All	• Remediation • Replace	• Check sheet • Photograph	
			Deformation, dents or warping of sliding plate	No irregularities that could affect performance of SI system						
			Scratches, corrosion on painted parts	No visual scratches or corrosion						
		6.1.3 Connecting bolts	Connecting-bolt stability	Retighten specified in construction plans	Before inspection at completion	Torque wrench	All misaligned parts	Retighten	• Check sheet • Photograph	
			Final marks			Visual	All	Re-mark		

@seismicisolation

3. Confirmation of quality control for manufacturing of devices

CM should confirm that SI devices meet the requirements specified in design documents. Those requirements are set out in meetings between the contractor and MFR.

Quality control in the stage of manufacturing of SI devices consists of "confirmation of self-management by MFR" and "an inspection in the presence of CM".

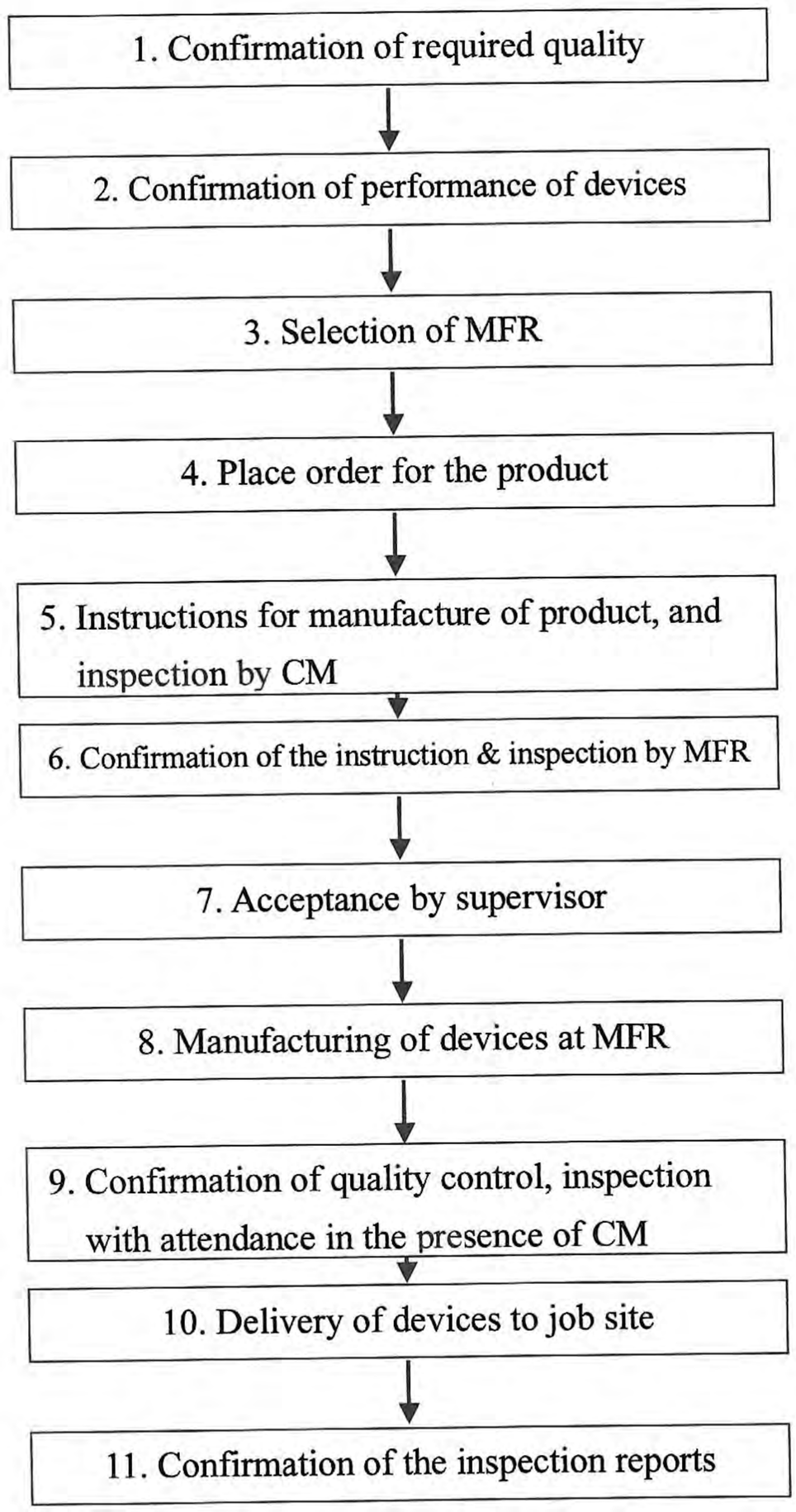

Figure 3.1 Control of manufacturing SI devices

@seismicisolation

3.1 Control of manufacture of isolators

When ordering isolators from MFR, CM should confirm that isolators are of the appropriate dimensions and quality, and that they are suitable for the structure.

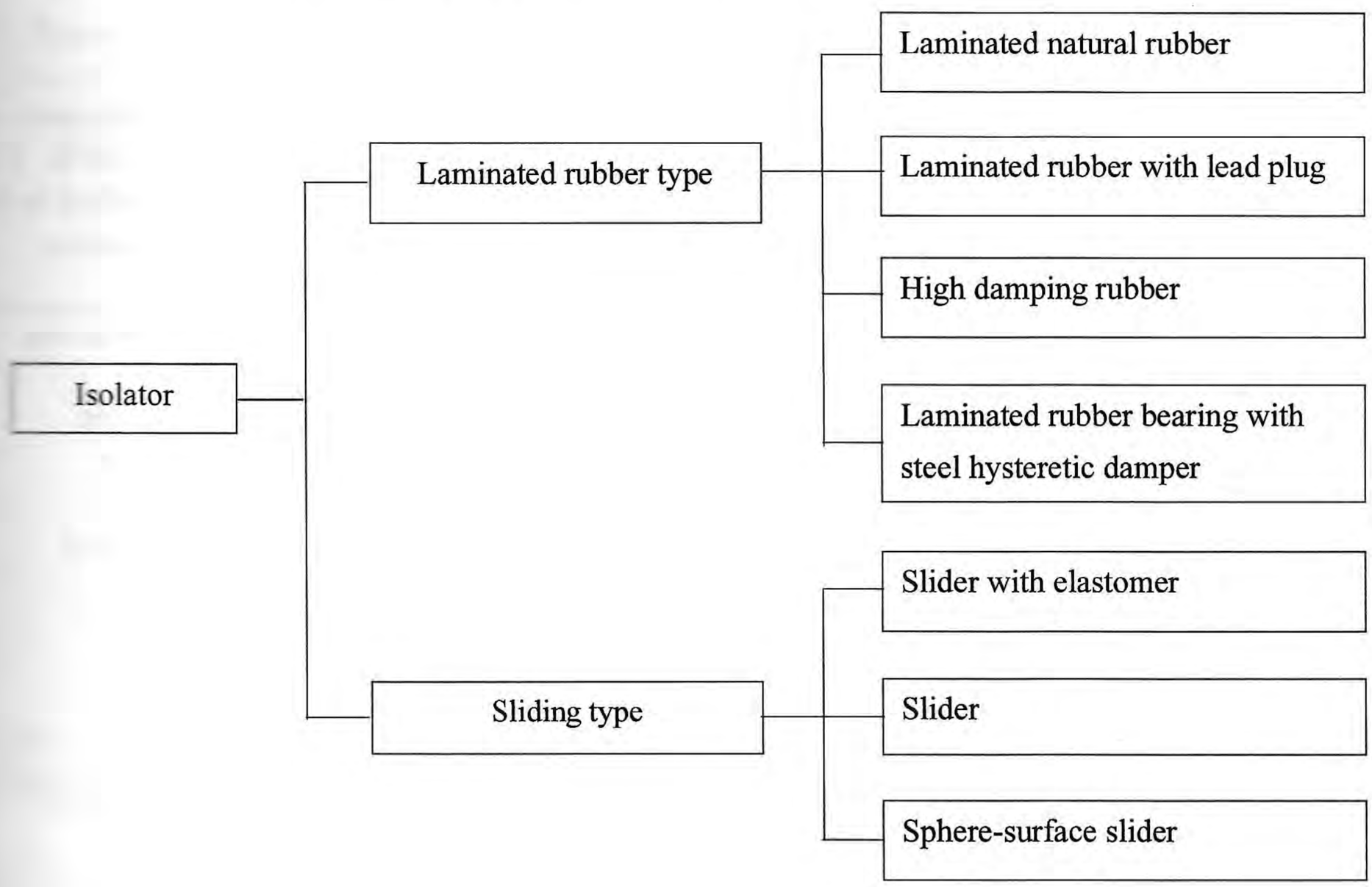

Figure 3.1.1 Classification of isolators

(1) Types of isolators

The isolator is required to have a load support function to support the structure, a large deformation function during earthquakes, a restoring function (to restore the structure to the original position), and a damping function to attenuate vibration. The type and characteristics of the isolator adopted in the design are described in the design document. CM should confirm the quality of products in order to realize the functions and specifications of these devices.

a) Laminated-rubber bearing

A laminated-rubber isolator is a device obtained by alternately layering steel plates and rubber sheets. It has high rigidity in the vertical direction and can support a large load. Because of shear deformation of rubber, it has soft stiffness and large deformation. There is a laminated natural-rubber bearing and a laminated natural-rubber bearing with steel damper attached to the flange.

b) Slider

Slider is a device that combines sliding material that is maintains the friction within a certain range and sliding surface material. Sliding material is generally made of tetrafluoroethylene resin (PTFE), and the sliding surface is usually of stainless steel or steel plate with a special coating. This consists of a slider with elastomer or a rigid slider attached to the flange, or a spherical slider that has restoring function with the sliding surface as a sphere.

@seismicisolation

(2) Confirmation of required performance

Prior to fabrication of the isolator, CM should understand quality control items and the control classification in order to assure that the isolators will perform as specified in design documents.

(3) Confirmation of the summary of production and inspection for isolator

Manufacturing, inspection procedure and shipping form should be included in the summary of production and inspection. This summary should be submitted to CM by the MFR. CM should confirm that it includes all the items that meet required performance as specified in the design documents. The following items are in the summary of production and inspection;

1. General: Application, other related standards, manufacturing procedures, manufacturing
2. Company: MFR profile
3. Material: Applied materials and industrial standards for rubber, steel plates, lead, etc.
4. Manufacturing: Structure of devices, manufacturing procedures, remarks related to procedures
5. Inspection: Items, methods, frequency, tolerance (dimension, material, horizontal and vertical stiffness, etc.), damping factor (hysteresis curve), etc.
6. Indication: Model-number indications for each device
7. Shipping: Shipping-packing methods
8. Documents: Documents for CM
9. Drawings: Drawings by MFR

The following items should be confirmed in the manufacture and inspections of isolators.

a) Specification of colors and parts to be painted, touch-up painting

b) Types of devices and the product number for inspection upon delivery

c) Methods for protection of rubber of laminated-rubber bearings, methods for protection of sliding surface and temporary restraints for sliders

(4) Quality control

CM performs quality control of isolators based on the summary of production and inspection as approved by the supervisor. The inspection items, quantity of sampling inspection and quality control are shown in Appendix 8. There are many kinds of sliders and bearings. One example of each is shown in this book.

The items of quality control performed by MFR should be reported as "the inspection reports". CM should confirm that all the inspections were carried out appropriately and that their results meet the requirements specified in the design documents.

@seismicisolation

3.2 Control of manufacture of dampers

When ordering isolators from MFR, CM should confirm that dampers are suitable for the structure, dimensions, performance, and quality specified.

(1) Types of dampers

Types of dampers are shown in Figure 3.2.1

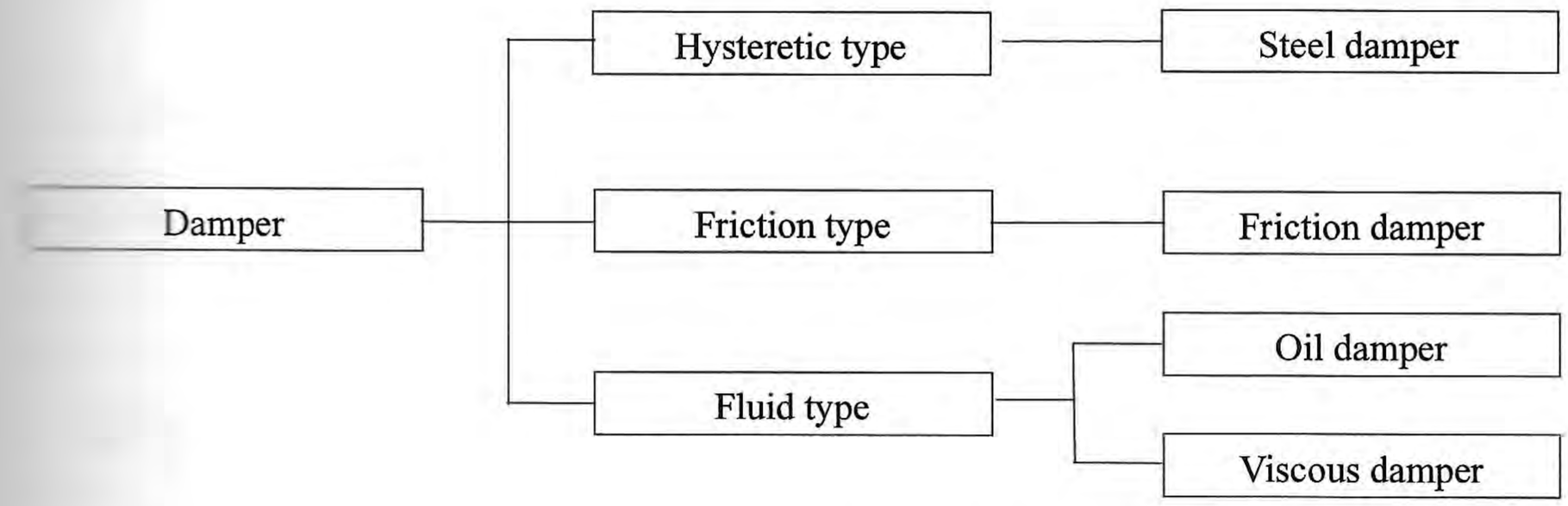

Figure 3.2.1 Classification of dampers

Hysteretic dampers convert seismic energy to heat energy by hysteretic deformation of the devices, and friction dampers do so by friction between the materials.

(2) Confirmation of required performance

CM should understand the items of quality control before manufacturing of dampers is begun.

(3) Confirmation of "the summary of production and inspection" for dampers (See the items of Chapter 3.1. (3))

Manufacturing, inspection procedure and shipping-packing methods should be included in the summary of production and inspection. This summary should be submitted to CM by the manufacturer. CM should also confirm that it includes all the items that meet required performance as specified in the design documents.

The following items should be confirmed;

a) Specification of colors, parts to be painted and touch-up paint
b) Types of devices and their product numbers for inspection upon delivery
c) Shipping-packing methods

(4) Quality control

CM performs quality control of isolators based on "the summary of production and inspection" as approved by the supervisor. The inspection items and the inspection frequency of "U-shaped damper", "oil damper" and "viscous damper" are shown in Appendix 8. The items of quality control carried out by MFR should be reported as "the inspection reports". CM should confirm that all the inspections were carried out appropriately and that their results meet the requirements as specified in the design documents.

@seismicisolation

3.3 Control of manufacture of baseplates for SI devices

When CM orders baseplates from MFR, it is the responsibility of CM to provide MFR with appropriate specifications to assure that baseplates are suitable for the structure.

Baseplates have the structural function of transferring loads from the superstructure to the foundation through the laminated rubber. Additionally, baseplates should be replaceable in order to allow for replacement of the laminated-rubber bearings as necessary.

(1) Confirmation items in the design documents

Plate	a) Baseplate	Material, shape, dimensions (thickness, hole size, etc.), quantity
Anchor	b) Anchor bolt	Material, quantity, diameter, length, arrangement of rebar
	c) Stud bolt	Material, quantity, diameter, length, arrangement of rebar
	d) Long nut	Material, quantity, diameter, length, coupling length
	e) Anchor plate	Material, quantity, diameter, thickness, fixing method
Specifications	f) Surface preparation	Anticorrosive specification, final finishing specification
	g) Quality standard	Deformation*1, damage, shape, painting specification
Arrangement	Anchor bolt & rebar	1. CM confirms arrangement of anchor-bolts and rebar by drawing 2. CM feedbacks the supervisor if arrangement is not finished.
Attaching bolt		Material, quantity, diameter, length, anticorrosive specification, strength class

*1 In case of galvanizing, strain can become greater, therefore CM should confirm degree of strain at the time of inspection.

The details of anchor bolts and stud bolts should be confirmed.

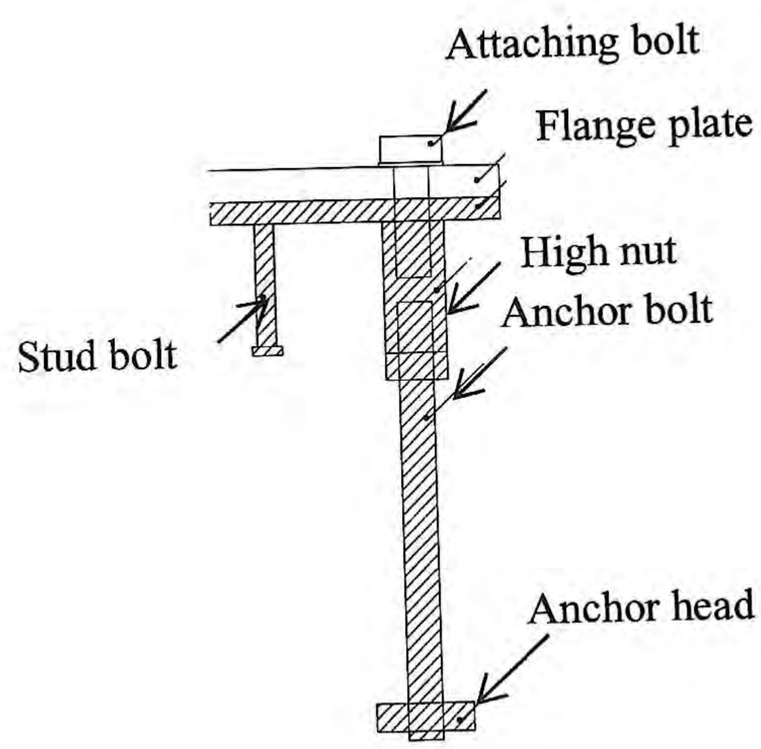

Figure 3.3.1 Anchor bolt

(2) Remarks for setting baseplates and footing

a) Hole for pouring concrete

A hole should be cut out at the center of the baseplate through which concrete is poured. Concrete must be able to fill the space under the baseplate. The diameter of the hole should be from 150mm to 200mm.

b) Methods of filling under the baseplate and release of air

There are two methods of filling the space. Several air release holes of 30mm should be

@seismicisolation

provided at the top of the baseplate to prevent air pockets from forming. Concrete is poured through an opening at the top of the baseplate and air is forced out through air holes provided in the plate. Alternately, grout can be injected from one side to the opposite side.

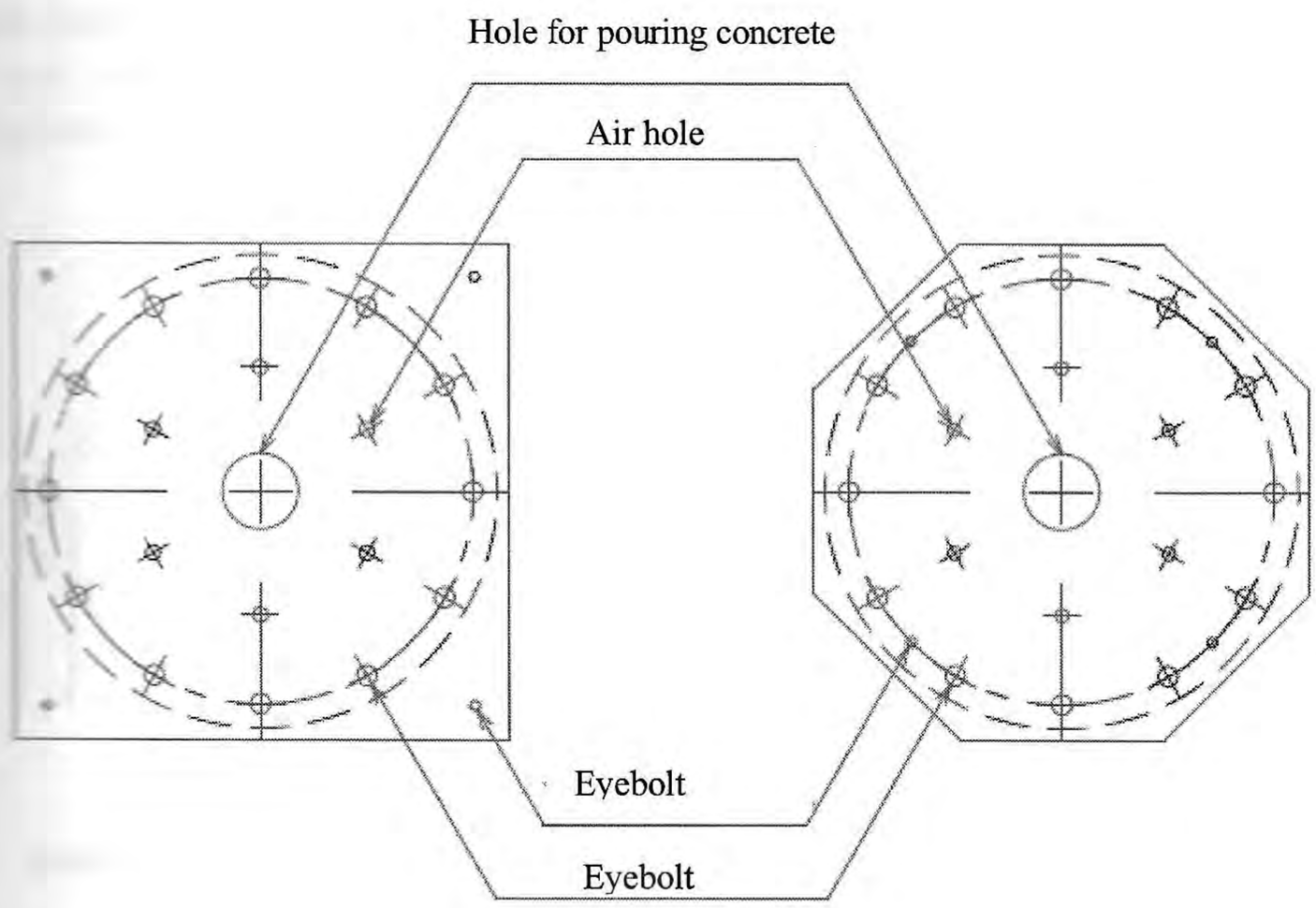

Figure 3.3.2 Baseplate holes

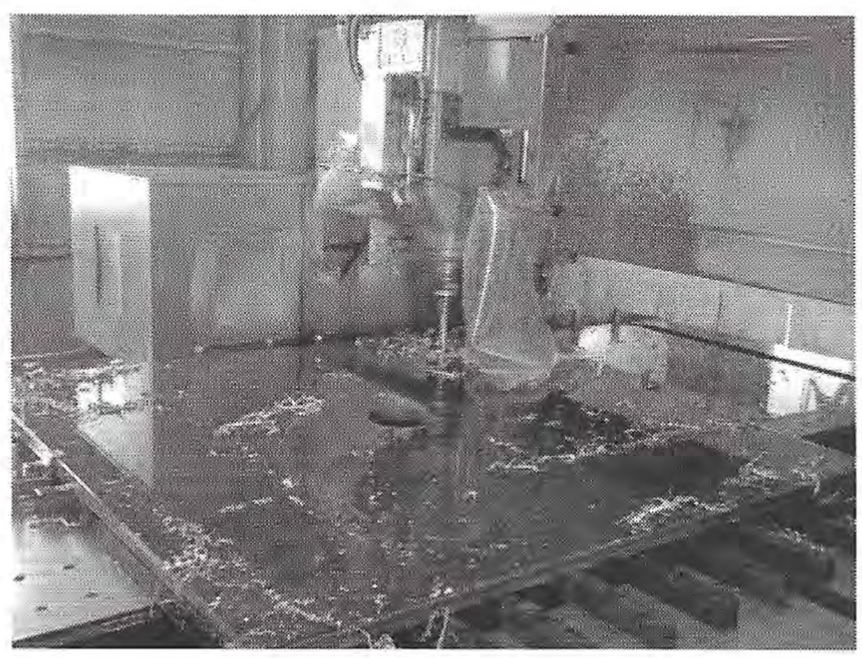

Photo 3.3.1 Drilling of holes

c) Holes for installation of temporary horizontal restraint
A horizontal restraint is installed to maintain the position of slider and to prevent lateral movement due to eccentric load of superstructure. Bolt holes for the restraint must be provided.

d) Hanging bolt holes (for a lower baseplate)
No protruding objects are allowed from the upper surface of the baseplate. Removable eyebolts are used for provision of a sling wire in order to install the baseplate. For this

@seismicisolation

operation, four holes are provided for the eyebolts. They can be used as air release holes after removing the eyebolts.

e) Jig for level adjuster (for lower baseplates)

One of the most precise activities during installation of baseplates is the maintaining of horizontal and positional accuracy. Installers of baseplates should be able to adjust and set horizontal and vertical positions with accuracy by using baseplate installation jigs. This should be specified in the summary of construction when jigs are installed beneath the baseplate.

Photo 3.3.2 Example of jigs for adjusting levelness

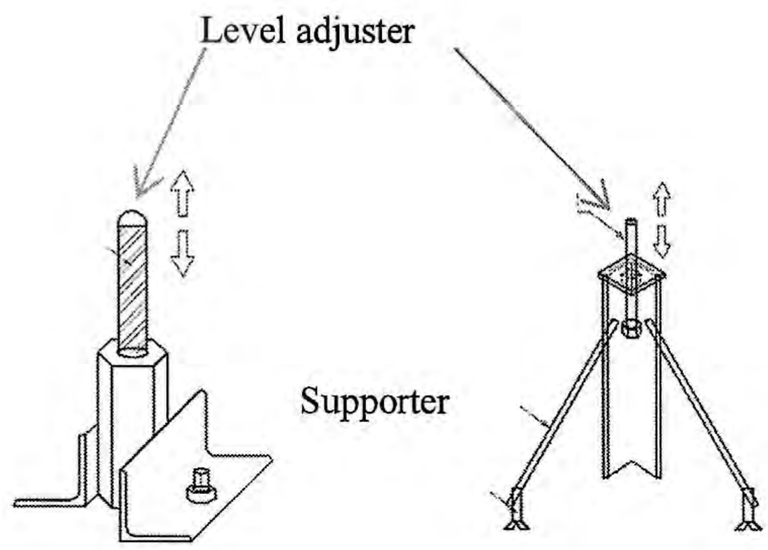

Figure 3.3.3 Anchor frame

f) Anchor bolts

SE should design that the anchor bolts are set in between the rebar, and CM should confirm this in the installation details. When long anchor bolts are installed for tensile force imposed on baseplates and anchor bolts by superstructure, they could block the rebar for columns and beams. CM should discuss with the supervisor regarding the fixing method and the procedure to avoid blockage.

@seismicisolation

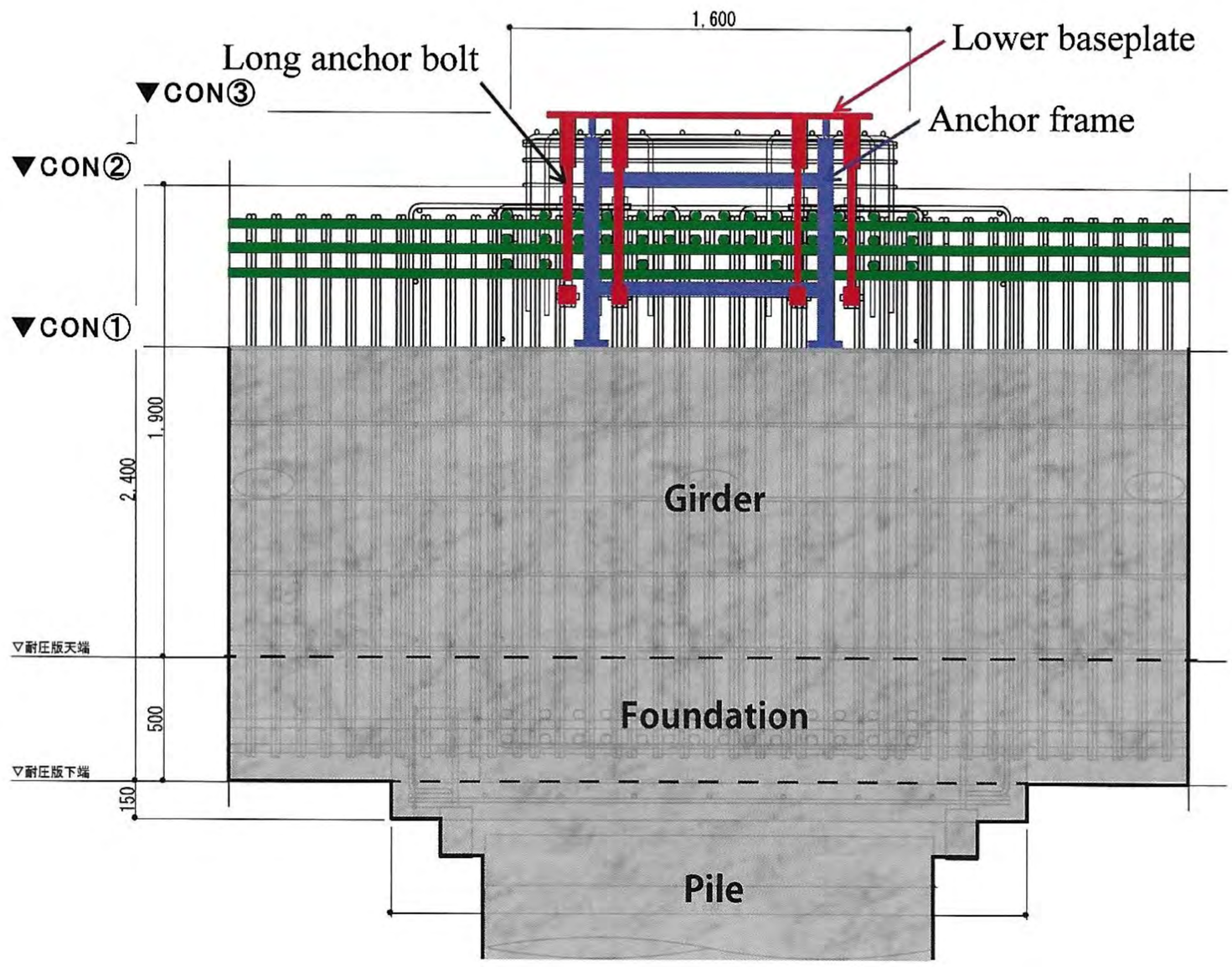

Figure 3.3.4 Example of long anchor bolts

g) Confirmation of precision of manufacturing

Baseplates should be manufactured nearly to the same level of precision as the isolator flanges. Precision of the baseplates should be confirmed before delivery to the site. CM should confirm the position and diameter of bolt holes in the baseplates by using the same template that is used for the isolator flange plate.

Photo 3.3.3 Confirming flatness of baseplate

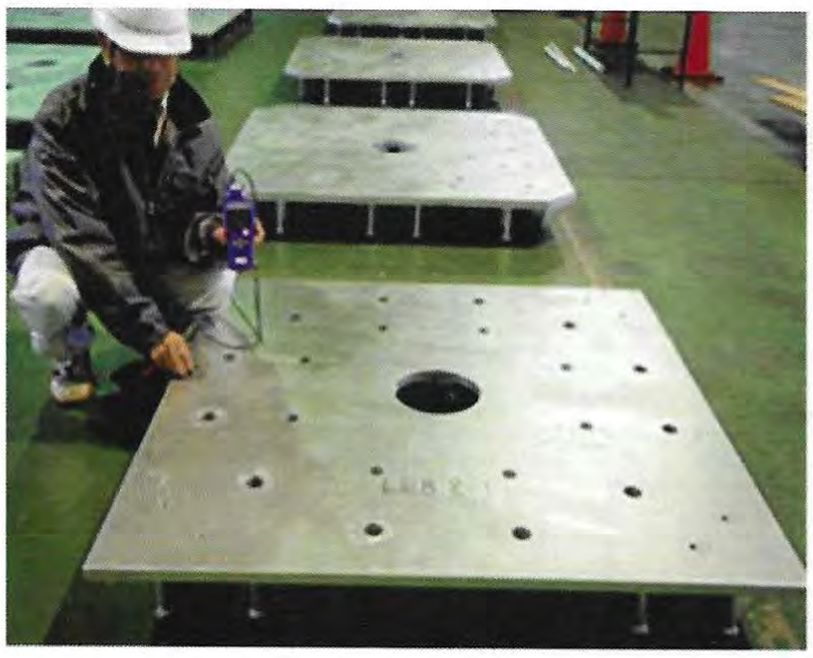

Photo 3.3.4 Measuring thickness of paint

(3) Quality control for baseplates

CM should confirm that the baseplates meet the quality requirements specified in the design documents or that they are approved by the supervisor.

@seismicisolation

@seismicisolation

Table 3.3.1 Quality control for baseplate

Objectives	Inspection items	Inspection method	Extent	Criteria	Treatment
Material	Inspection certificate from MFR	Verification	All	As stated in specifications	Reject and demand new device
Stud with head	Visual inspection of welding portion	Visual	All	No deformation	Reject and demand new device
	Strength welds	Bending test	Sampling*1	As stated in specifications	Reject and demand new device
Baseplate	Bolt position, diameter	Measurement	All	As stated in specifications	Reject and demand new device
	Warping of plate	Measurement*2	All	Less than or equal to 1/500, and 3mm	Remediation
	Partial deformation	Visual	All	Suitable for setting	Remediation, or reject and demand new device
	Measurement of thickness of paint	Visual	All	No peeling of paint	Remediation
		Measurement of thickness	All	As stated in specifications	Remediation
Anchor bolt	Length of anchorage	Measurement	All	As stated in specifications	Replace

Note: *1: The number of baseplates for to be tested should be indicated by the supervisor. When there is no indication, more than one baseplate and at least 10% of baseplates of the same diameter must be chosen for inspection.

*2: The measurement points for a curve of the plate are on the flange plate as shown in Figure 3.3.5.

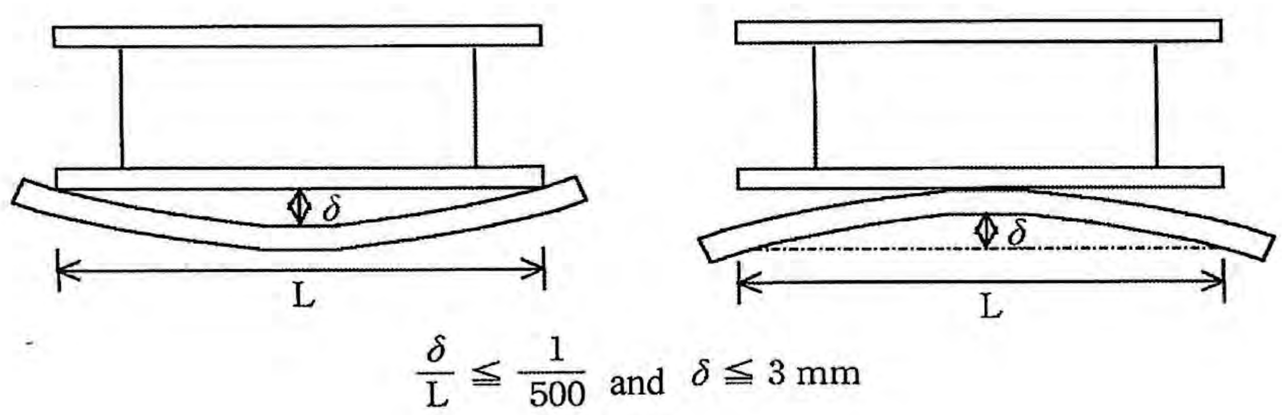

Figure 3.3.5 Warping of baseplate

3.4 Control of manufacture of pipe joints

When CM orders pipe joints from MFR, it is CM's responsibility to confirm that the pipe joints are suitable for the structure, dimensions, performance and meet quality specifications as specified in design documents.

CM understands the performance required for pipe joints by SE and carries out manufacturing control and installation of pipe joints. Pipe joints must be flexible in order to follow displacement of buildings during earthquakes, and a sufficient range of movement should be maintained.

The following performance is required for pipe joints:

- Ability to follow displacement
- Durability: Ability to withstand cyclic deformation
- Restoration of shape: Performance to restore shape after displacement absorption while maintaining piping function

Pipe joints are selected based on the above-specified performance, installation location and space for movement. It is necessary to design fixed-support-parts that can withstand reaction forces. As pipe joints are a consumable, CM confirms the route for transporting pipe joints to installation site for replacement.

CM makes sure that types of pipe joints and their materials are selected with consideration of the mounting location for movement.

1. Confirmation of design value for movement
2. Check the installation location of each pipe
3. Confirmation of flexible type
4. Confirming of space for movement
5. Confirmation of fixed mounts

3.4.1 Pipe joint materials

Pipe joint materials must be suitable for fluid type.

Table 3.4.1 shows types and applicability of pipe joints. An example of installation of pipe joint is shown in Figure 3.4.1.

Table 3.4.1 Types and applicable range for pipe joint

Type	Fluid	Temperature for use ℃	Max pressure (MPa)
Rubber	cold water, hot water, cooling water, water supply	less than or equal to 70	1.0
	drainage		0.3
Metal	cold water, hot water, cooling water, water supply, hot water supply, steam, oil, gas for medical use	less than or equal to 150	2.0
Fluoro-resin	hot water supply, chemical liquid, pure water	less than or equal to 100	1.0

@seismicisolation

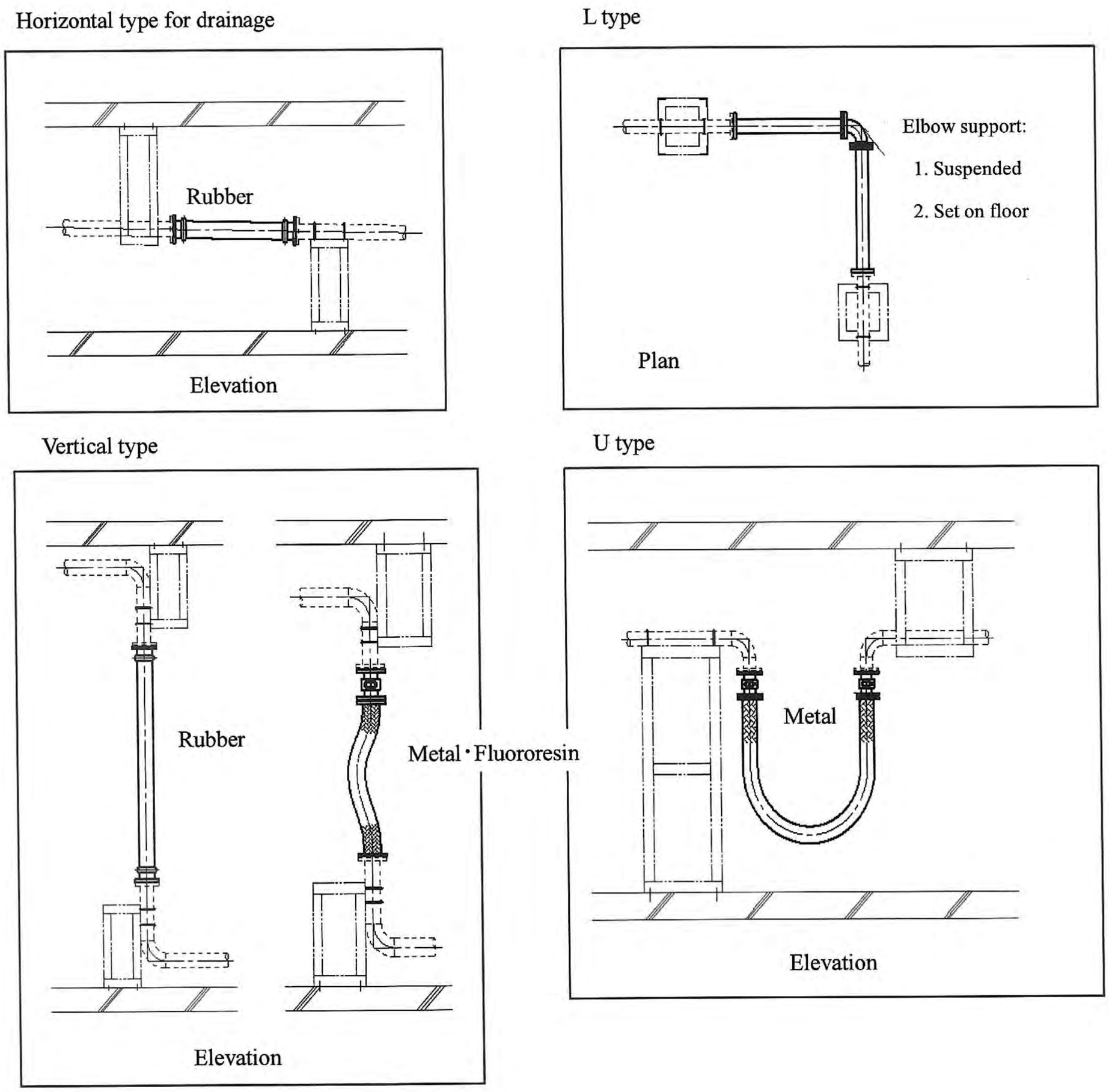

Figure 3.4.1 Pipe joint types (Example)

@seismicisolation

3.4.2 Space for pipe joint movement

To ensure that pipe joints do not come in contact with piping, equipment or structure during earthquakes, a sufficient space for movement is secured according to the design value. Care must be taken so as not to set obstructions in the space for movement after pipe joint installation.

During an earthquake, pipe joints deform as shown in Figure 3.4.2 and 3.4.3. Do not set anything that in the area within the hatched line that could hinder the movement of pipe joint. It is desirable to indicate range of movement with paint.
A = design movable amount + flange dimeter x 0.5 + 100 *
B = pipe joint length + elbow length
C = design value
(*Margin for safety)

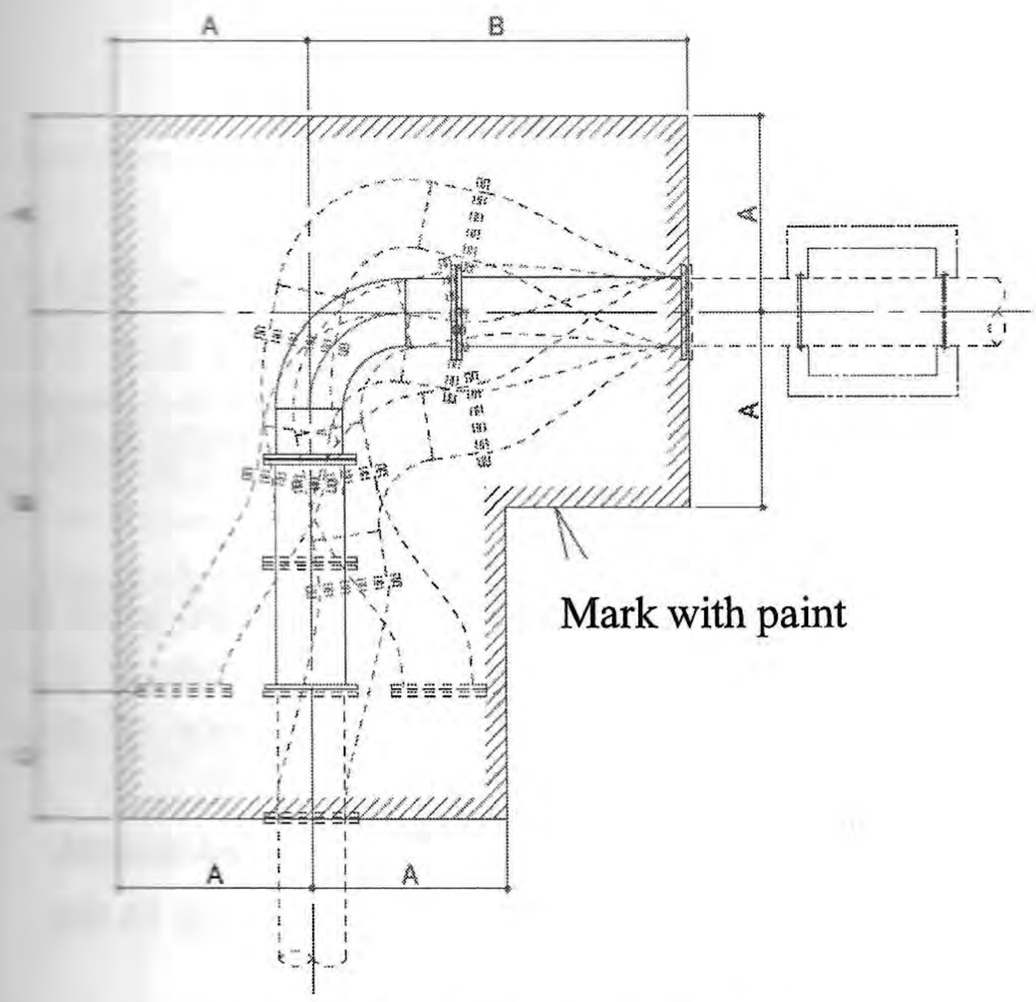

Figure 3.4.2 Space for movement

@seismicisolation

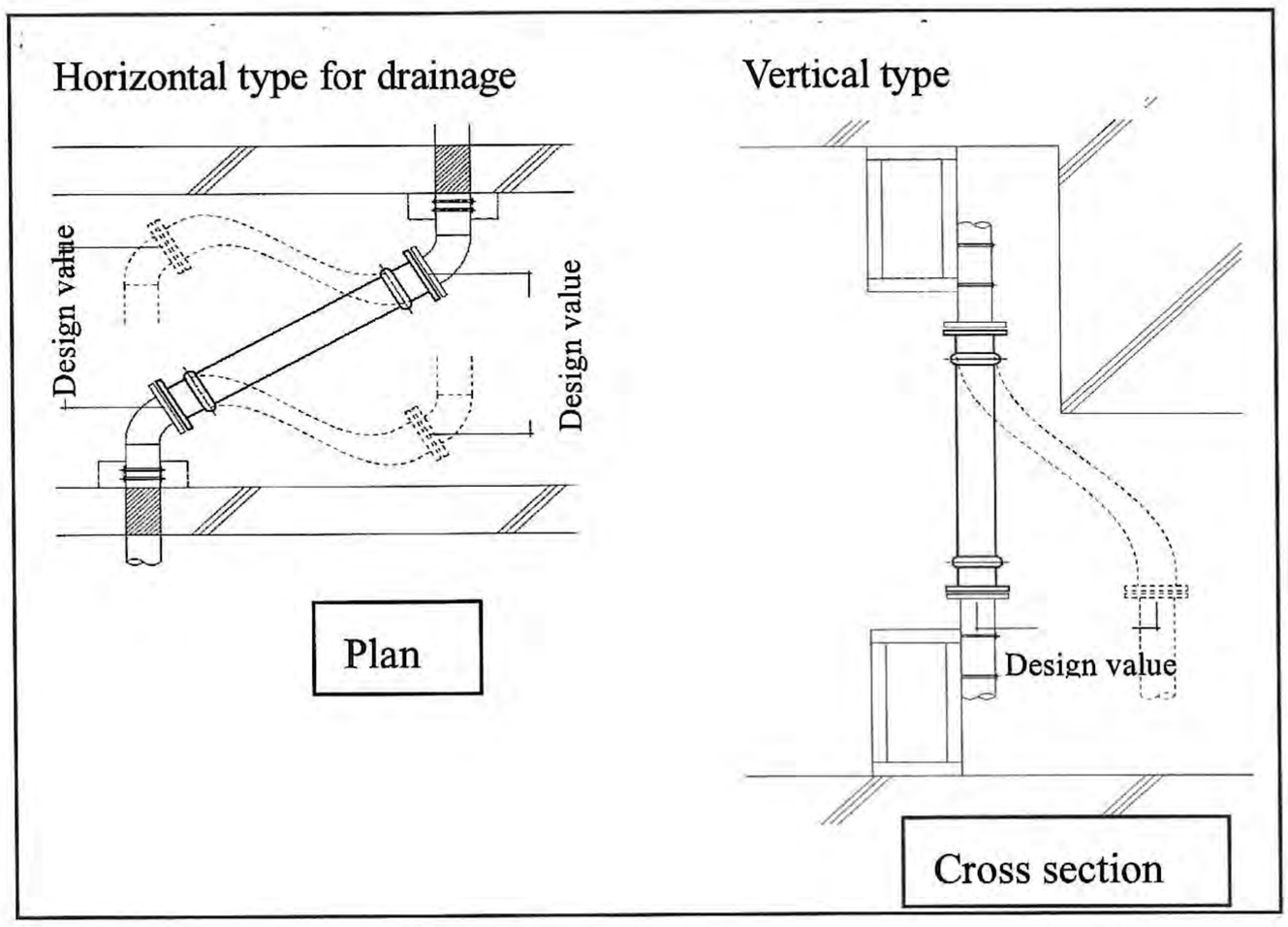

Figure 3.4.3 Space for movement of pipe joint

3.4.3 Fixed frames for pipe joints

In order to follow displacement of pipe joints, it is necessary to ensure sufficient strength of the pipe fixing support of SI portion and non-SI portion.

In order to follow displacement of pipe joints, the fixed support and the fixing pipe must be provided on the SI side and the non-SI side in order to withstand the reaction forces of pipe joint. If the fixed support is incomplete, the displacement absorption performance of pipe joint will be compromised, thus consideration must be given (Figure 3.4.4 and 3.4.5):

- Fixing pipes should be set with two or more U bolts or by welding to the respective mount.
- If the distance to the fixed support is long, the pipe size should be selected according to the bending strength of the pipe.
- CM confirms that the steel materials of the fixed mounts and the anchor bolts are strong enough to withstand the reaction forces of pipe joint.

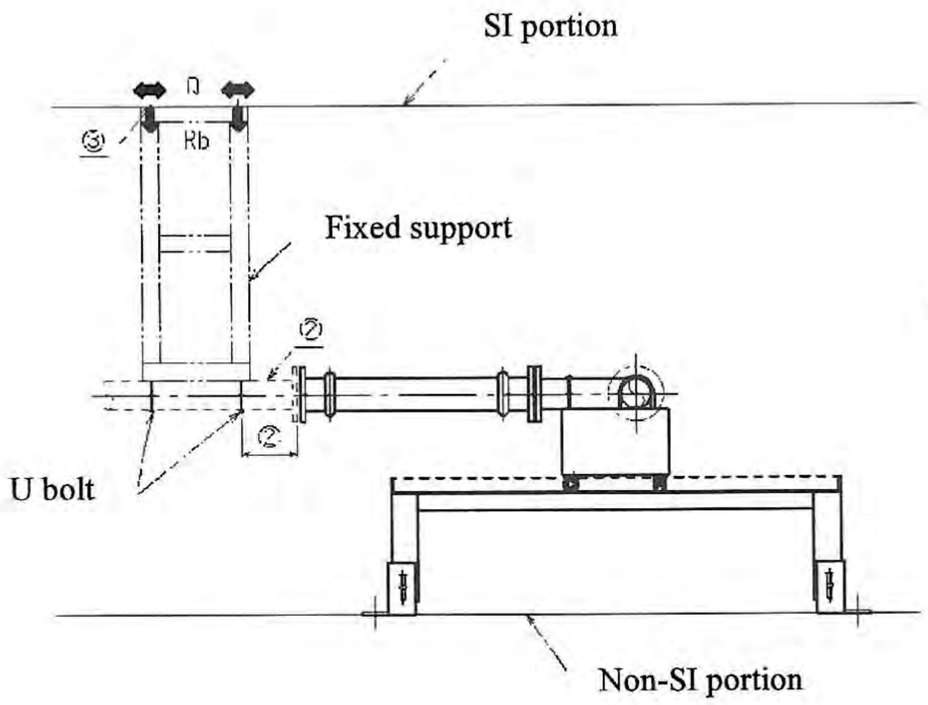

Figure 3.4.4 Fixed support on SI portion

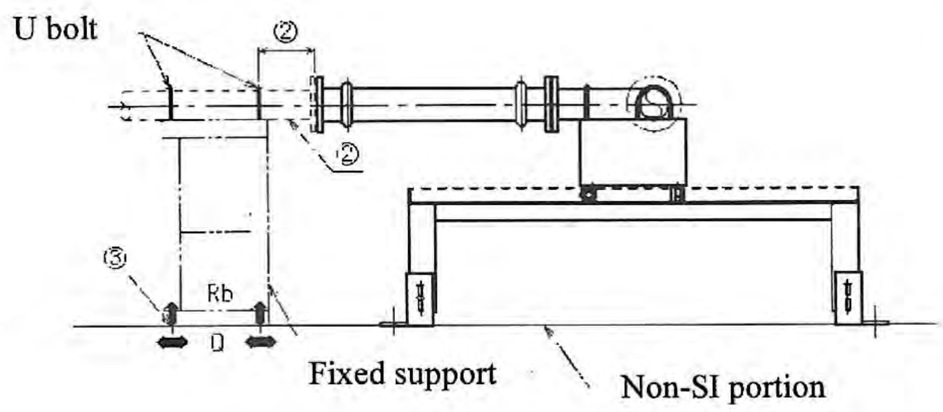

Figure 3.4.5 Fixed support on non-SI portion

@seismicisolation

3.4.4 Product inspection

CM must request inspection reports from MFR for the products that CM order and must confirm that the contents meet design specifications.

Products inspection must be carried out as shown in Table 3.4.2.

Table 3.4.2 Inspection for pipe joints

Objectives		Inspection items	Frequency	Criteria	Treatment
Dimension test		Dimension: Length Flange: diameter, hole diameter	All	As stated in inspection standard	Reject and demand new device
Visual inspection	Rubber and steel connections	Deformation or other damage	All	・No damage ・No deformation	Reject and demand new device
	Steel portions	Deformation or other damage	All	As stated in inspection standard	Reject and demand new device
		Surface treatment	All	No damage	Remediation

3.4.5 Confirming of performance test

CM must request performance test results from MFR and confirm that the pipe joints are suitable for the performance specified in design document. If tests were carried out for previous orders of the same products, those test results can be used.

Items to be tested and their criteria are shown in Table 3.4.3.

Table 3.4.3 Performance test of pipe joints

Objectives	Inspection items	Criteria	Treatment
Horizontal deformation test	・Horizontal deformation: Designed movable amount ・Test pressure: As prescribed (50 cycle tests should be done for above items)	No visible damage	Reject and demand new device
Pressure test after loading	・Test pressure: 1.5 times of prescribed pressure ・Time: More than or equal to 5 minutes	・No damage ・No leakage of water	Reject and demand new device

The test for pipe joints is a 50-cycle test for horizontal displacement, as shown in Figure 3.4.6. The test is done in the directions of load. The test velocity is set at 50cm/s or more, and then the pipe joints are visually examined for damage. As an example, in the case of a horizontal displacement of 400mm, as shown in Figure 3.4.7, the period is about 3 seconds.
(40 (cm) *2 *2) / 50 (cm/s) = 3.2 (s)

@seismicisolation

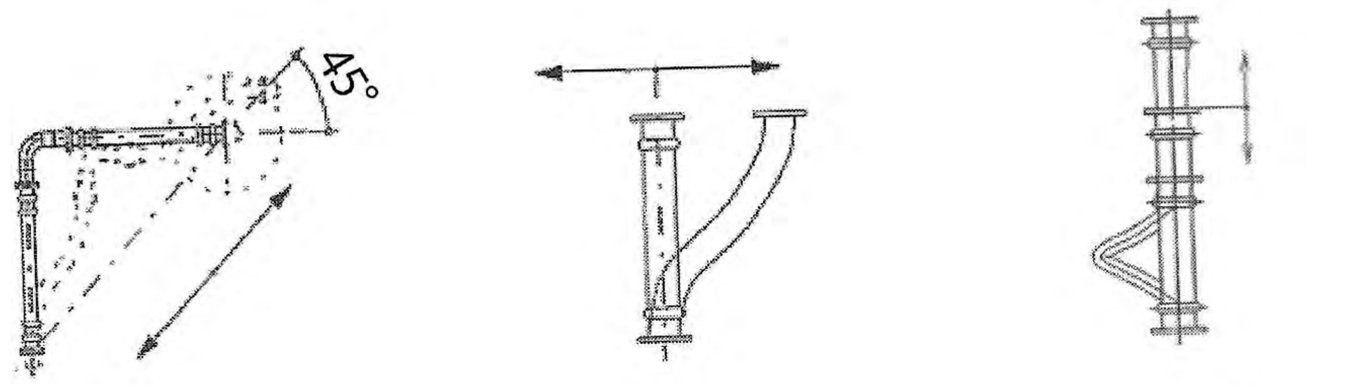

a) L type b) Vertical type c) Horizontal type

Figure 3.4.6 Direction of cycle test

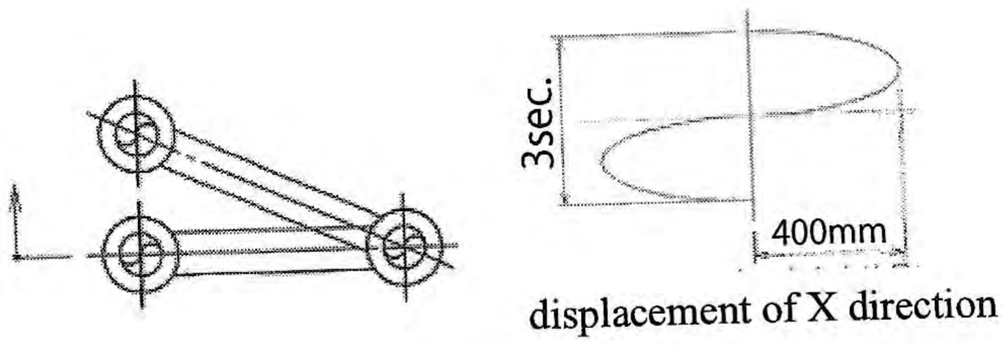

Figure 3.4.7 Period of cycle test

@seismicisolation

4. Temporary works planning

4.1 Temporary works planning

One significant difference between conventional- and SI buildings is the introduction of the SI layer in SI building. Large lateral displacement occurs in SI building during earthquakes or in strong winds while the building is under construction. Therefore, it is important to assess potential lateral movement of the superstructure, and to assure accuracy and safety of construction of temporary works.

CM should confirm after discussing with the supervisor or SE that displacement of the superstructure due to earthquakes during construction does not interfere with construction. However, if steel frames are erected directly on the isolators (see Chapter 4.2(2)), or if sliders are installed, lateral restraints for the displacement must be provided so as to assure accuracy of construction of the superstructure. Structures such as scaffolds for temporary works should be safe.

(1) Scaffolding

Scaffolding should be set on the berm of the superstructure or its brackets attached to the superstructure. In other cases, the base of scaffolding should be able to slide so as to be able to follow displacement of superstructure, which in turn to prevent collapse of the scaffolding (Figure 4.1.1 and Photo 4.1.1).

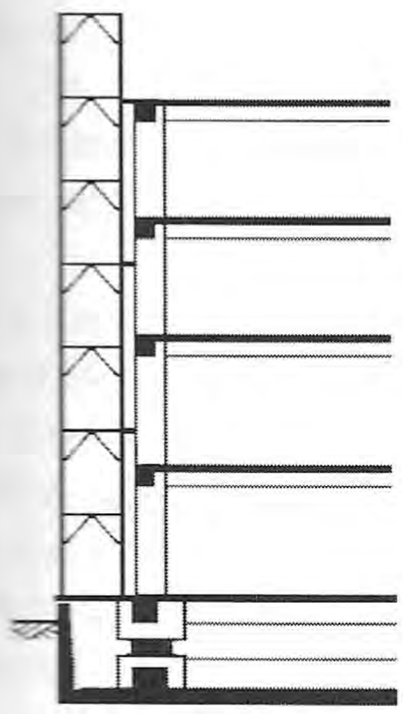

Figure 4.1.1 Scaffolding on berm

Photo 4.1.1 Scaffolding supported by brackets

(2) Crane

During construction, earthquakes and wind loads cause much more lateral movement in SI buildings than conventional buildings. Cranes are not affected by lateral displacement of SI buildings when they are fixed on the substructure or are on the ground.

There are mainly two types of cranes; one is a floor-climbing tower crane and the other is a mast-climbing crane. Tower cranes are set on the superstructure. It is required to check them for any potential problems due to resonance (the natural period is 2-3seconds). Mast-climbing cranes are fixed directly to the superstructure with supports. CM should discuss assumption of displacement and reinforcement of supports with SE, supervisor and crane manufacturer (Photo 4.1.2 and 4.1.3).

@seismicisolation

Photo 4.1.2 Example of tower crane on the building (floor climbing)

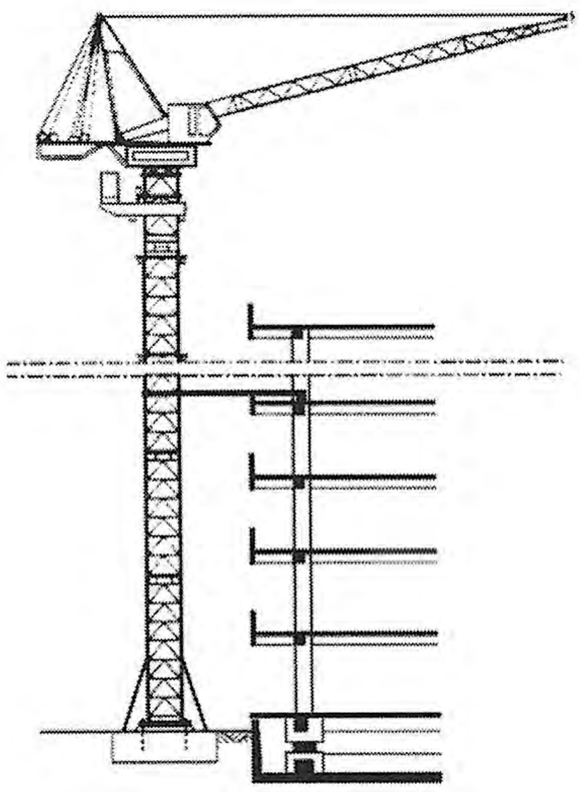

Photo 4.1.3 Tower cranes: set on the ground and fixed to the structure (mast-climbing)

(3) Temporary lifts for construction

A temporary lift should be fixed to the superstructure in such a way so as not to make contact with the substructure or the ground. The connecting parts of the lift to each floor must be reinforced to prevent collapse of the lift (Photo 4.1.4).

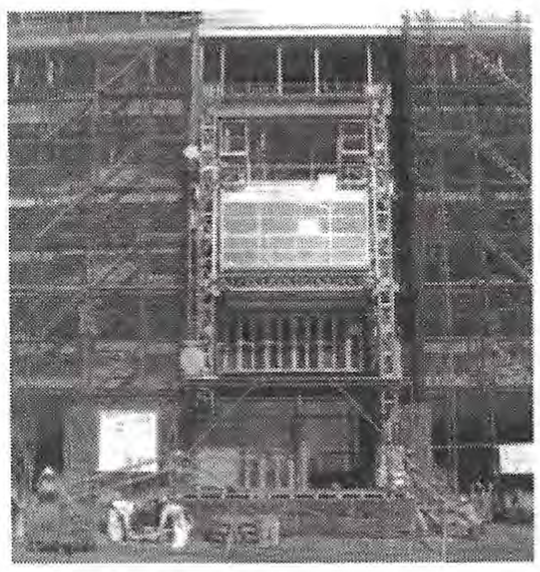

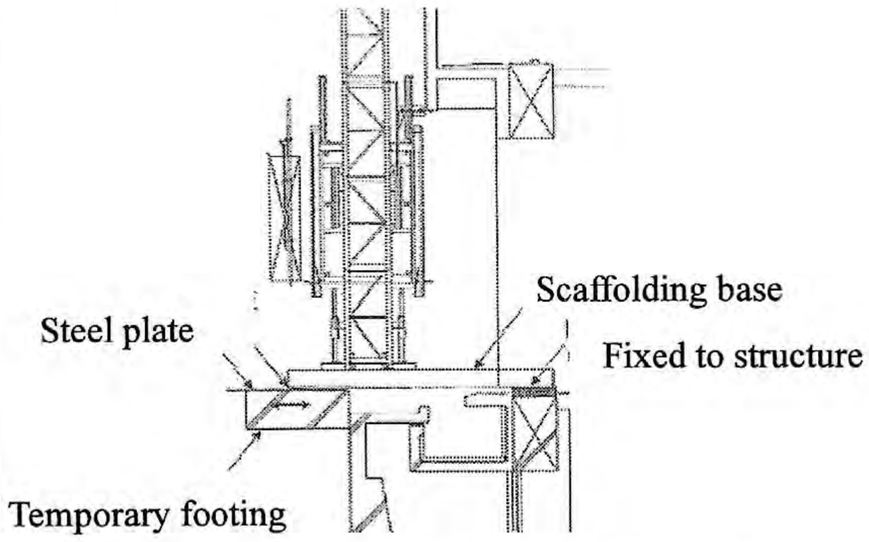

Photo 4.1.4 Temporary lift: set on the berm and fixed structure

@seismicisolation

(4) Entrance for driving onto the construction site
Work platforms, temporary bridges for construction vehicles and passages for workers should follow lateral movements during earthquakes.

(5) Perimeter zone of SI building
In the perimeter zone of an SI building, the following facilities are prohibited:
· Temporary buildings
· Temporary water-supply, drains, and electric facilities
· Temporary storage for materials
· Parking
No obstacles should be placed in the perimeter zone within at least 50cm from the superstructure.

4.2 Lateral restraints

Temporary lateral restraints must be used for the construction of SI buildings in cases where lateral deformation or movement of SI layer or devices could interfere with construction of the superstructure.

(1) Horizontal restraints
The main purpose of installation of horizontal restrains is to fix isolation devices during construction period. Horizontal restraints should be able to come off during construction without damaging the isolator itself in the case of an earthquake of a level that is specified by SE. They are removed when the isolation layer is able to perform its function.

CM should discuss with the supervisor regarding when the horizontal restraints should be removed.

(2) A case of a steel frame erected directly on top of the isolator
When steel frames are erected directly on top of the isolator (Photo 4.2.1), any distortion at the footing of the steel frame should be rectified in order to avoid any effect on the SI system. In this case, distortion means twist, bending or lateral displacement that could occur during the placement of columns and fastening of bolts.

When setting corner- or side-columns, an unbalanced vertical load on the isolators could be induced, therefore lateral restraints are installed between the top- and bottom-flange plates of the isolator to prevent this problem (Photo 4.2.2). Usually the upper flange plate of the isolator is directly connected to the baseplate of the steel frame. The anchor bolts for the steel columns should be welded in advance to prevent transmission of heat to the isolator.

CM should discuss with the supervisor and steel manufacturer in the planning stage regarding details of the column base in order to minimize tolerance of positioning. The restraints must be removed right after completion of frames above SI layer.

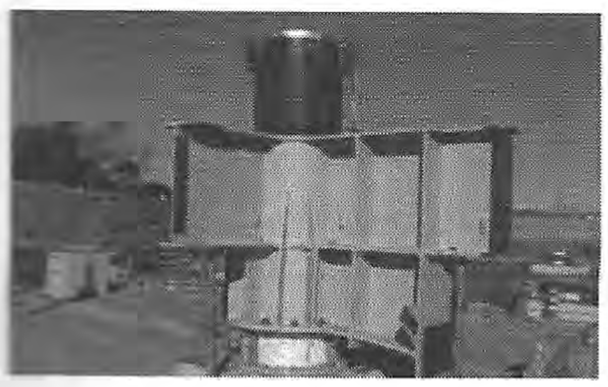

Photo 4.2.1 Erection on an isolator

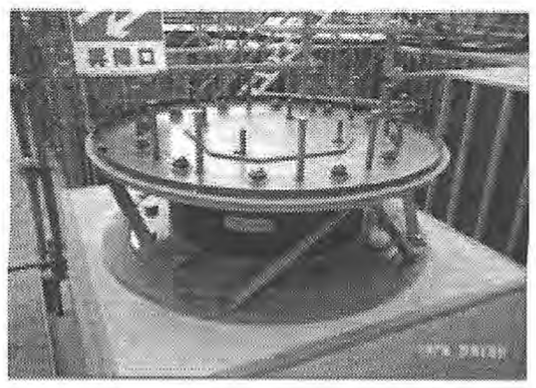

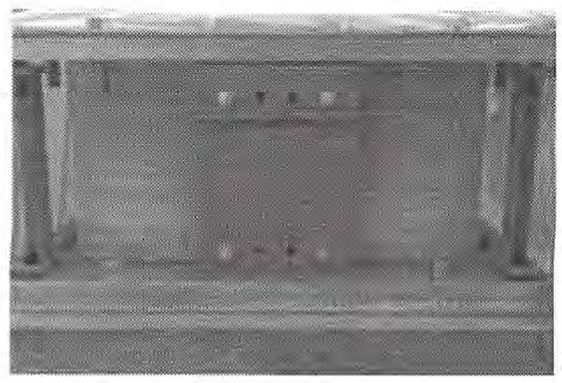

Photo 4.2.2 Horizontal restraint

@seismicisolation

(3) Sliders

Steel frames are built on temporary supports so that their weight does not act directly on isolators, then frames are set on isolators after confirmation of the position and the temporary supports are let down with the jack. Horizontal restraints for slider with elastomer are shown in Figure 4.2.1. Photo 4.2.3 shows an example of this operation.

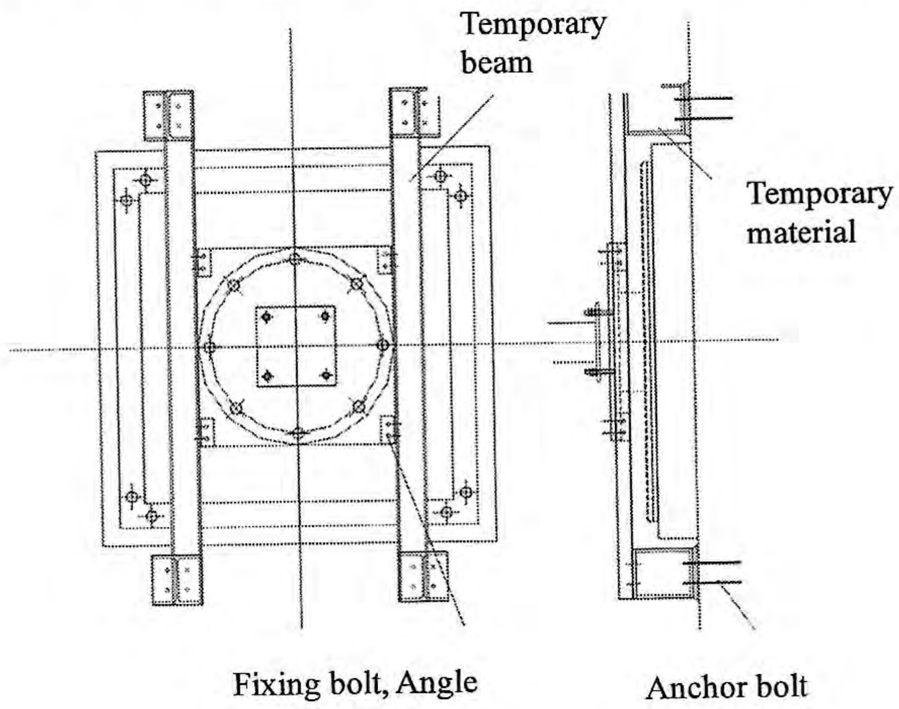

Figure 4.2.1 Example of horizontal restraint for slider with elastomer

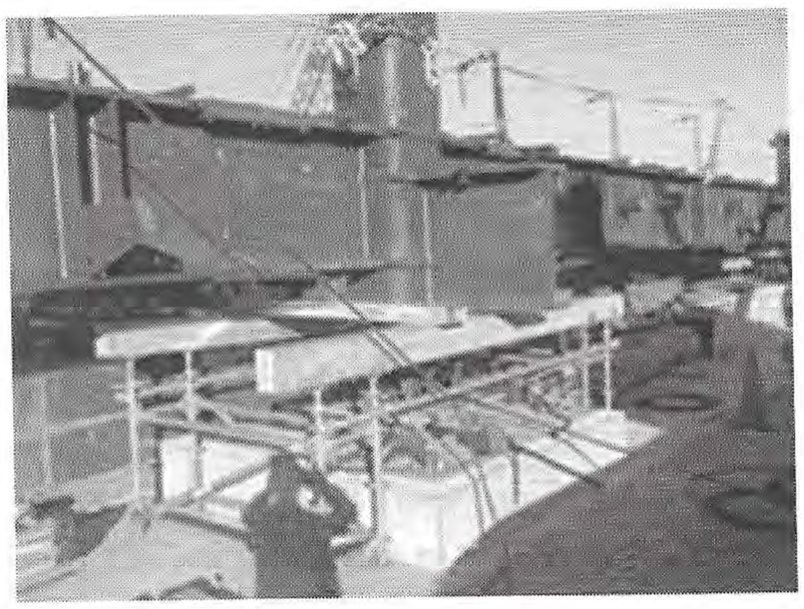

Photo 4.2.3 Example of steel frame on temporary supports

@seismicisolation

5. Construction of SI layer

5.1 Acceptance inspection

5.1.1 Acceptance inspection for isolators and dampers

At time of delivery, CM should check isolators and dampers in order to confirm that they are suitable for performance as specified in the design documents, and then must obtain approval from the site supervisor.

Isolators and dampers must be manufactured according to the manufacturing specifications and inspection plan, and then approved by the site supervisor. The actual dimensions and performance of all isolators and dampers should be checked before shipping.

For the inspection at acceptance at the delivery site, the type, quantity and any damage during transportation of the products should be confirmed. To check for damage caused during transportation a sampling inspection (at least two pieces from each delivery) must be carried out and the condition of curing should be checked for the rest of the products. Items of a sampling inspection are shown from Table 5.1.1 to Table 5.1.4.

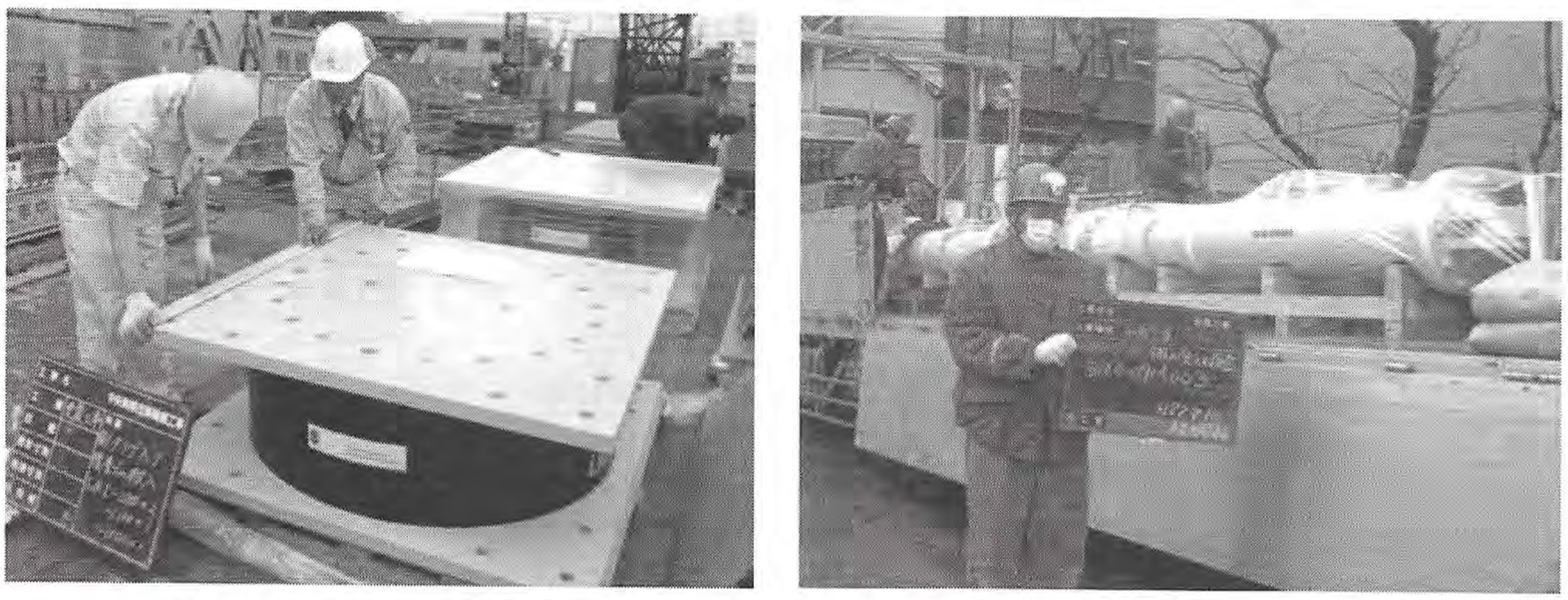

Photo 5.1.1 Acceptance inspection for isolators and dampers at site

Table 5.1.1 Acceptance inspection for LRB

Objectives	Inspection items	Method	Criteria	Treatment
Indication	・MFR name ・Type ・Product number	Verification	As stated in delivery plan	Reject and demand proper device
Protection	Condition	Visual	No damage to the protective cover	Rewrap
Laminated rubber	・Scratches ・Cracks ・Deformation	Visual	・No scratches ・No cracks ・No deformation	Reject and demand new device
Flange	・Damage ・Local deformation ・Dents	・Visual ・Measurement	・No damage ・No local deformation ・No dents	Reject and demand new device
	・Scratches ・Corrosion on the painted parts	Visual	・No scratches ・No corrosion	Remediation

@seismicisolation

Table 5.1.2 Acceptance inspection for sliders with elastomer

Objectives	Inspection items	Method	Criteria	Treatment
Indications	・MFR name ・Type ・Product number	Verification	As stated in delivery plan	Reject and demand proper device
Protection and tentative stoppers	Laminated rubber	・Visual ・Tactile	・No peeling ・No turning over of packing material	Rewrap
	Slider		・Protection sheets are affixed on the sliding plates. ・No looseness of tentative stopper	・Reaffix ・Retighten
Laminated rubber	・Scratches ・Cracks ・Deformation	Visual	・No scratches ・No cracks ・No deformation	Reject and demand new device
Flange and sliding plate	・Deformation ・Dents ・Warping	・Visual ・Measurement	・No deformation ・No dents ・No warping	Reject and demand new device
	・Scratches ・Corrosion	Visual	・No scratches ・No corrosion	Remediation
	Scratches on the sliding surface	Visual	No scratches	Reject and demand new device

Table 5.1.3 Acceptance inspection for spherical surface-slider

Objectives	Inspection items	Method	Criteria	Treatment
Indications	・MFR name ・Type ・Product number	Verification	As stated in delivery plan	Reject and demand proper device
Protection	Condition	Visual	・No peeling back of the protective material of upper or lower sliding surface ・No looseness of tentative restraints	・Rewrap ・Retighten
Isolator	・Scratches ・Dirt	Visual	・No scratches ・No dirt	Remediation
Sliding surface	・Scratches ・Deformation ・Levelness	Visual	・No scratches ・No deformation ・No tilt	Reject and demand new device

@seismicisolation

Table 5.1.4 Acceptance inspection for damper

Objectives	Inspection items	Method	Criteria	Treatment
Indications	・MFR name ・Type ・Product number	Verification	As stated in delivery plan	Reject and demand proper device
Protection	Condition	Visual	・No turning over of the protective covering ・No looseness of tentative restraints	・Rewrap ・Retighten
Damper	・Scratches ・Peeling of coat ・Dirt	Visual	・No scratches ・No peeling of coat ・No dirt	Remediation
Flange plates	・Deformation ・Dent	・Visual ・Measurement	・No deformation ・No dent	Reject and demand new device
	・Scratches ・Corrosion	Visual	・No scratches ・No corrosion	Remediation

5.1.2 Acceptance inspection for baseplates

At time of delivery, CM must check the baseplates in order to confirm that they are suitable for performance as specified in design documents, and then must obtain approval from the site supervisor.

The dimensions of the products and manufacturing tolerance should be inspected at the manufacturer before shipment. For the acceptance inspection at site, the types and quantity should be confirmed, and a visual inspection should be conducted (See Chapter 3.3).

For the visual inspection, a sampling inspection (at least two pieces from each delivery) must be carried out to check damage during transportation.

(1) Product inspection

It is very important to check the dimensions and manufacturing accuracy, such as positions of bolt holes and flatness of the plates.

(2) Acceptance check for baseplates at construction site

At the construction site, visual inspection must be carried out. The points for inspection are shown in Table 5.1.5.

Table 5.1.5 Acceptance inspection for baseplates

Objectives	Inspection items	Method	Criteria	Treatment
Indication	・MFR name ・Type ・Product number	Verification	As stated in delivery plan	Reject and demand proper device
Baseplate	・Scratches ・Corrosion	Visual	・No Scratches ・No corrosion	Remediation
	・Deformation ・Dent ・Warping	・Visual ・Measurement	・No deformation ・No dent ・No warping	Reject and demand new device
	Condition of bolt holes	Visual	Packed appropriately	Re-pack

@seismicisolation

5.2 Construction of SI layer

5.2.1 Construction process of SI layer

CM should make construction plan for SI work and confirm that SI devices and related parts are installed using appropriate construction process.

The footings of isolators are the most important part for the connection of devices to structures. In order to transfer axial force and shear force to the footings, the following items should be carried out:

- Placement of concrete joints
- Filling of space under the baseplate concrete, assuring there are no air pockets
- Arrangement of rebar: connection (lap joint), thickness of cover, anchorage
- Connection of rebar
- Covering of rebar: proper setting of devices and superstructure depend on installation accuracy of these procedures.

The installation process for device footings is as follows:

- Setting of anchor frame on foundation
- Fixing of lower baseplate with adjustable jigs on anchor frame

The standard construction process of the isolation layer is shown in Figure 5.2.1.

@seismicisolation

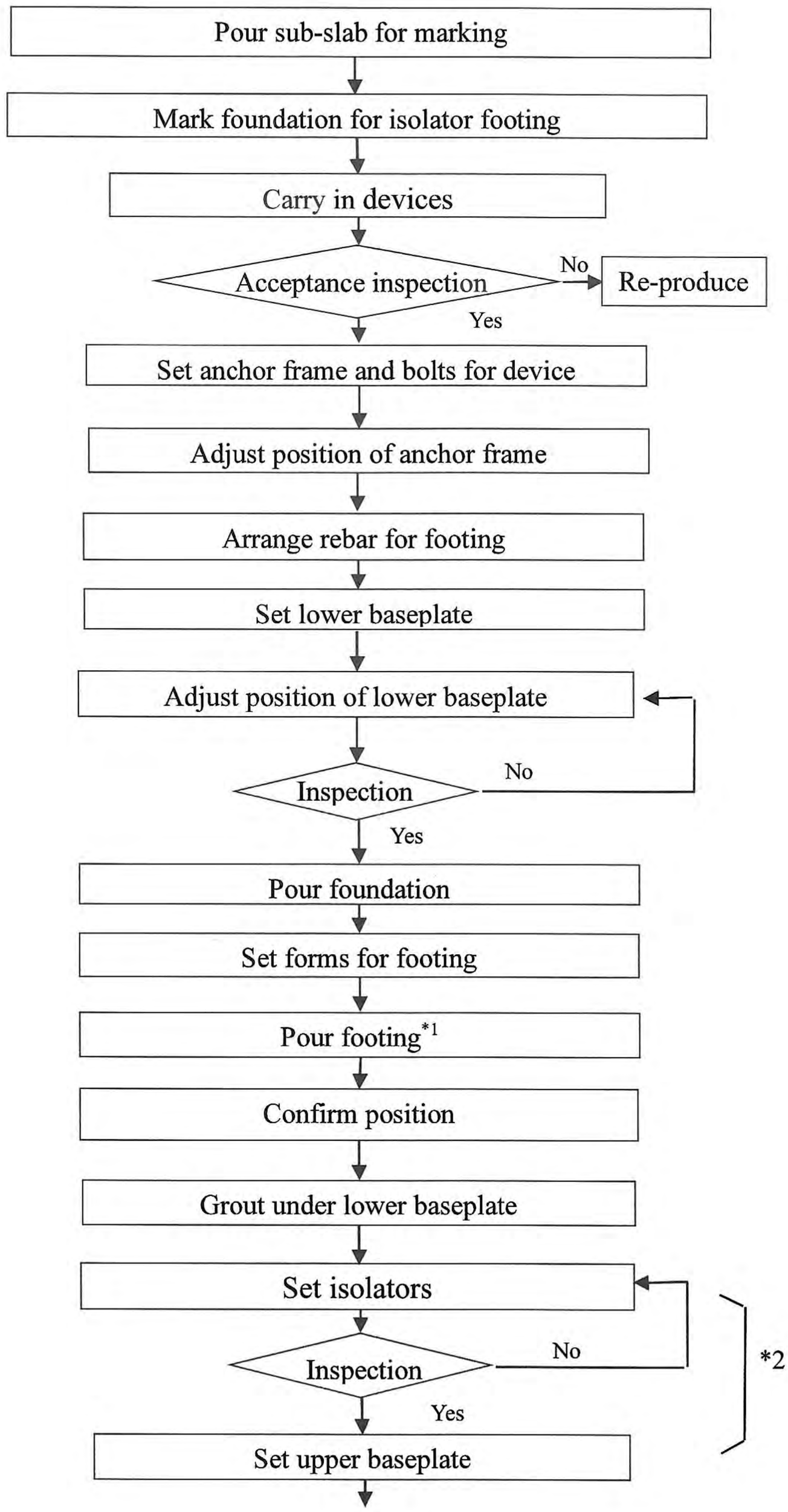

@seismicisolation

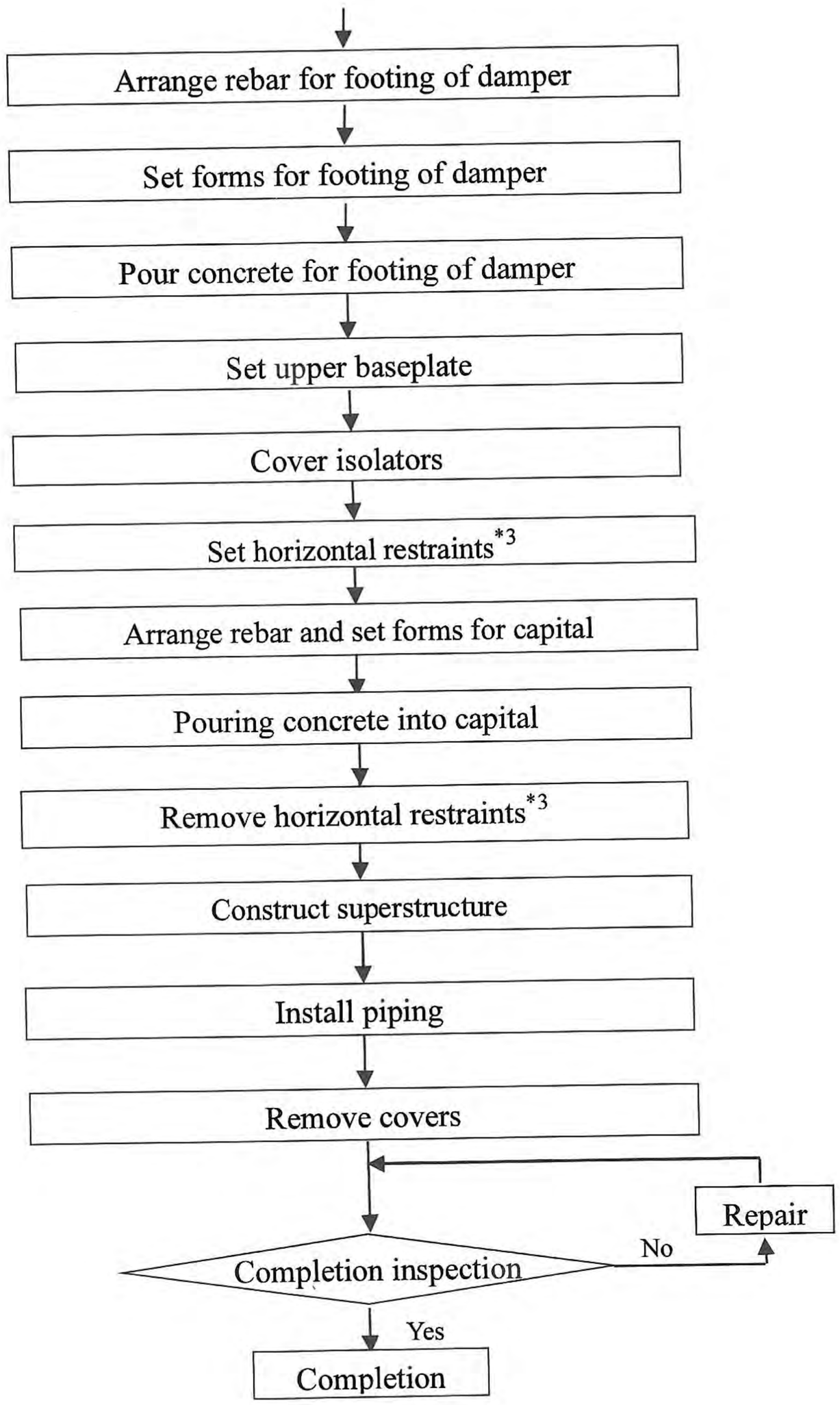

*1. Pour high-flow concrete.
*2. These processes are done at the same time by bolting the upper baseplate on the isolator.
*3. The purpose of applying a horizontal restraint is to temporarily prevent movement of the building.

Figure 5.2.1 Construction flow of SI layer

@seismicisolation

5.2.2 Construction process flow

SI devices must be installed by a process that ensures accuracy and quality in accordance with the construction plan.

It is very important to maintain accuracy and strength of the connection parts for installation of isolation devices. In addition, for installation of related parts of isolation devices, arrangement of reinforcement must not interfere with the anchors.

The standard process and the remarks regarding installation of LRB are shown as follows:
(⋮ : can be adopted as required by construction methods)

Construction process flow

[Construction process]

[Remarks]

Pour concrete mat

↓

Mark

↓

Set anchor bolts and anchor frames

↓

Adjust of position

↓

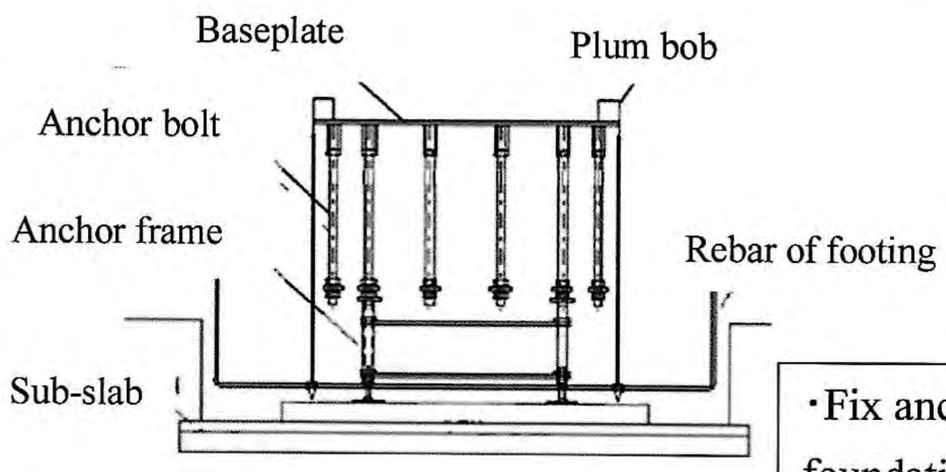

Figure 5.2.2 Setting of anchor bolts

・Fix anchor frame to the foundation.
・Use template to fix long anchor bolts.

Photo 5.2.1 Anchor bolts

Mark position of anchor bolts on foundation to avoid interference with the rebar.

@seismicisolation

Arrange rebar for foundation

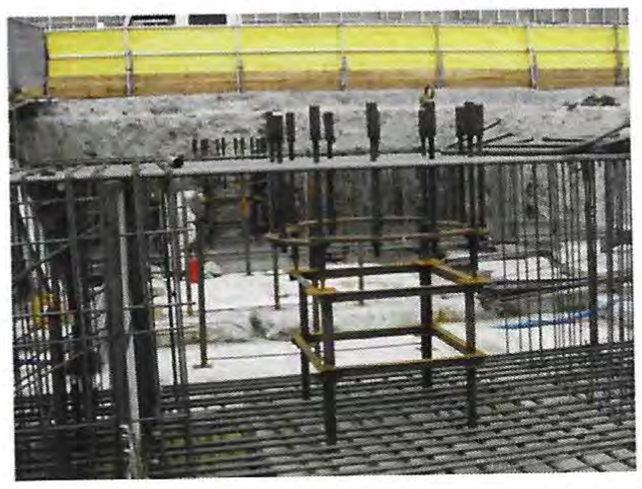

Photo 5.2.2 Arrangement of rebar

Rebar arrangement must not interfere with anchor bolts and frames.

Set lower baseplates

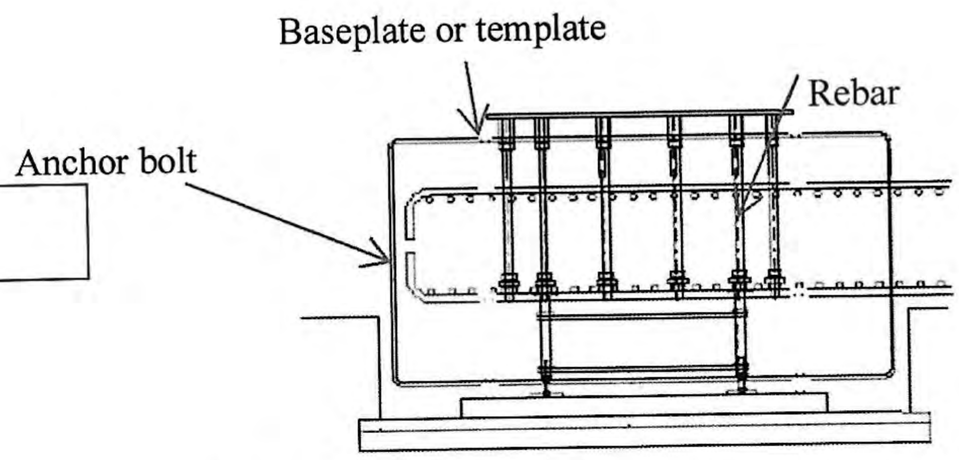

Figure 5.2.3 Setting of lower baseplate

Adjust position of baseplates

Photo 5.2.3 Lower baseplate

Within standard values

No

Yes

Pour foundation

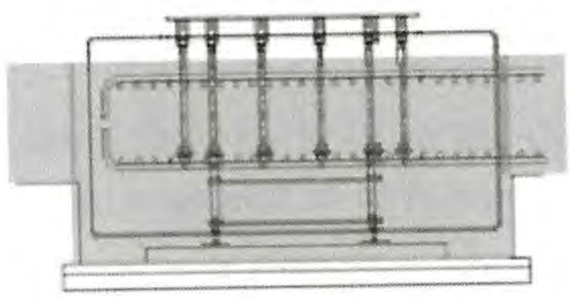

Figure 5.2.4 Pour footing

・Fix anchor frame tightly to prevent movement while pouring concrete.
・Protect surface of lower baseplate.

@seismicisolation

Set forms for footing

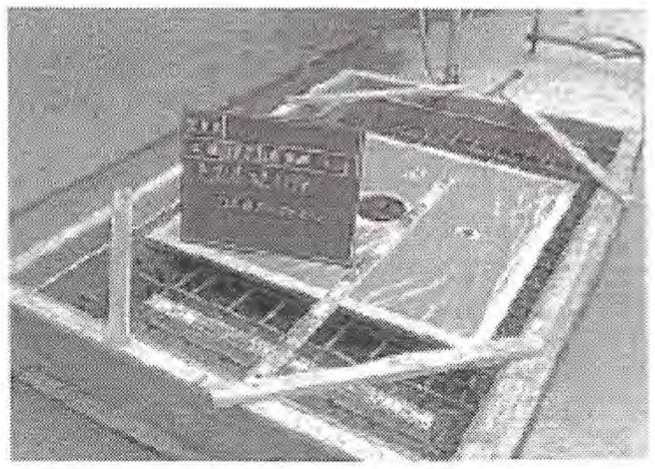

Photo 5.2.4 Setting forms

Pour footing

Photo 5.2.5 Pouring concrete

Pour footing

- Methods for pouring concrete into footing, high flow concrete is used.
- No vacant space is allowed between the concrete and the lower baseplate, so it keeps high filling factor. It is desirable to test before the construction.

Confirm concrete condition

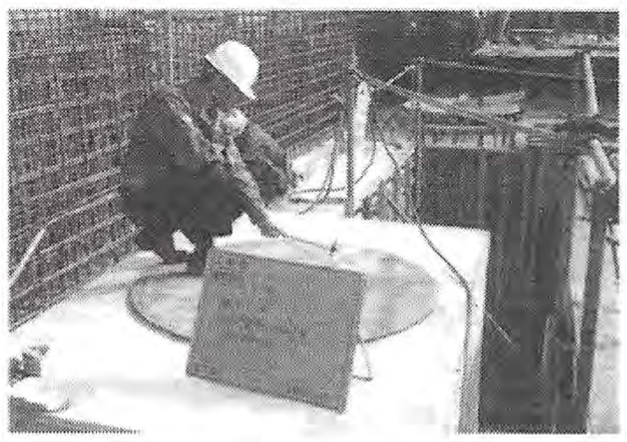

Photo 5.2.6 Check final condition of concrete

Keep setting accuracy of the lower baseplate.

Confirm that positions are within tolerance

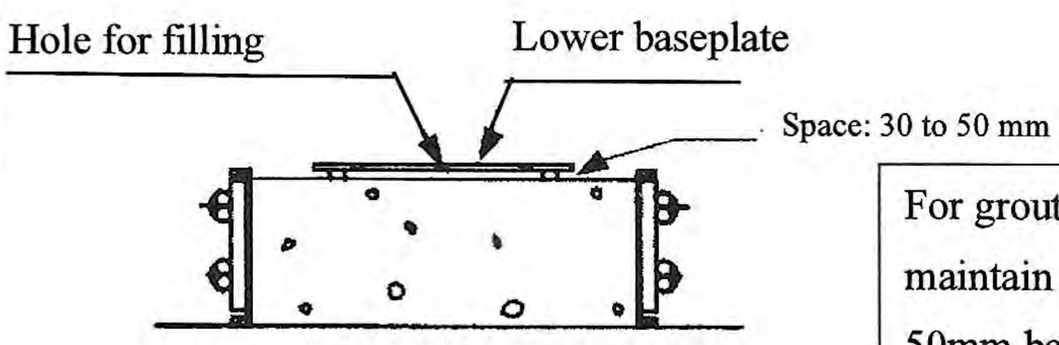

Figure 5.2.5 Grouting method

For grout filling process, maintain a space of 30 to 50mm beneath the lower baseplate.

Grout under baseplate

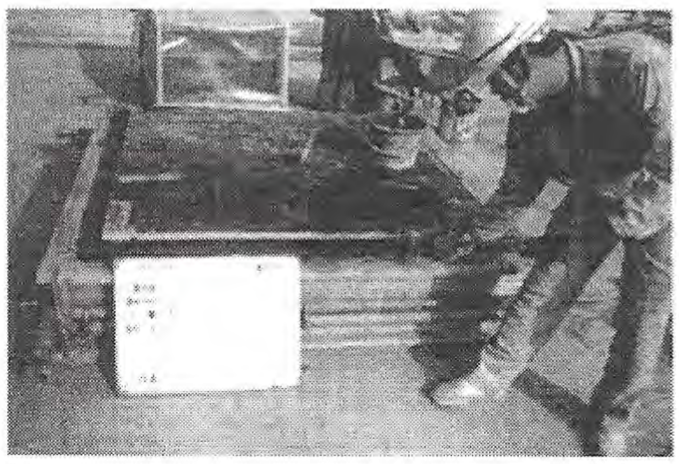

Photo 5.2.7 Check final condition of grout

Grouting is advisable for sliders with elastomer that have sliding plate integrated with the lower baseplate.

@seismicisolation

Install isolator

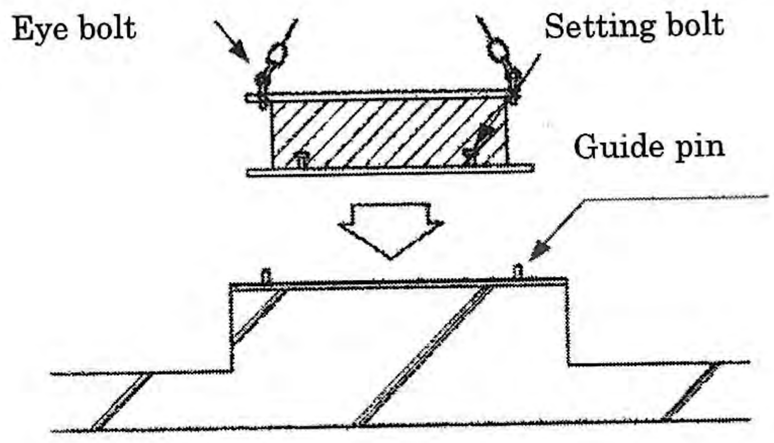

Figure 5.2.6 Installation of isolator

Eye bolts are set diagonally to the flange plate of isolator, then confirm appropriate position of bolt holes, after which isolator is set on the lower baseplate.

Inspection during construction

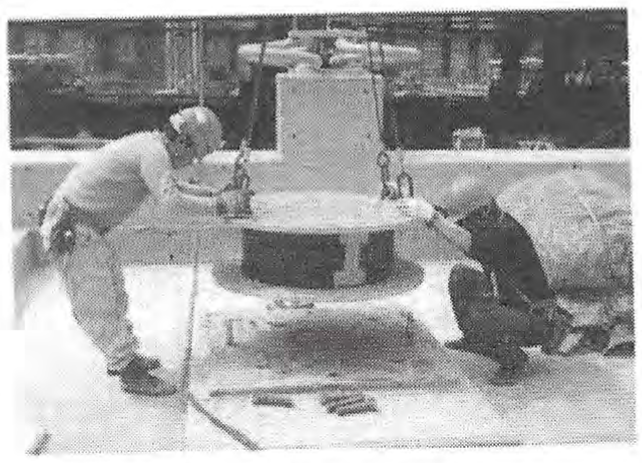

Photo 5.2.8 Isolator

Tighten bolts

Photo 5.2.9 Fastening of bolts

In cases where torque value is not indicated in design documents, it should be determined by supervisor (See Chapter 5.2.3).

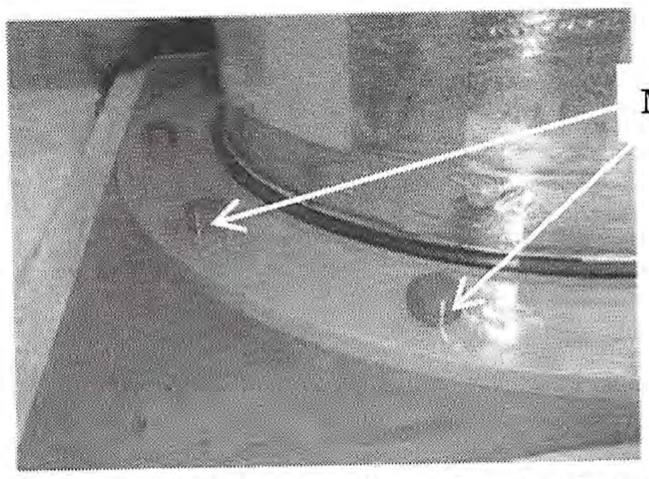

Photo 5.2.10 Mark after fastening bolts

@seismicisolation

Set upper baseplates

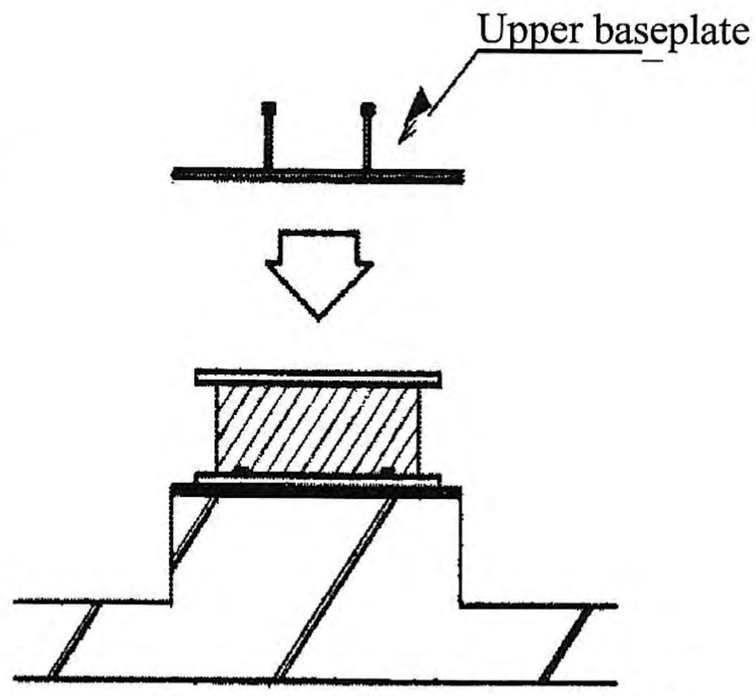

It is possible to set isolator with upper flange connected by bolts to upper baseplate when isolator is set on baseplate.

Figure 5.2.7 Setting of upper baseplate

Set anchor bolts on upper baseplates

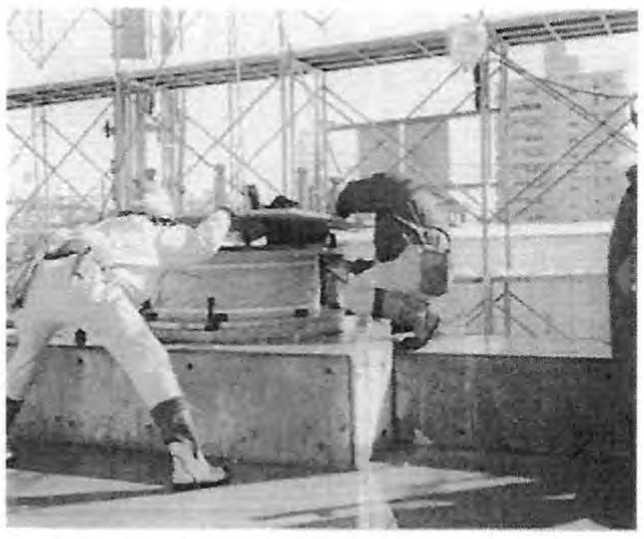

Photo 5.2.11 Upper baseplate

Protect isolators

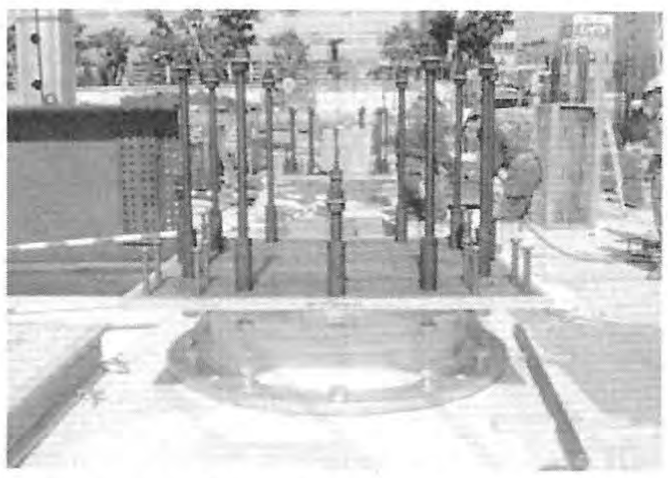

Photo 5.2.12 Upper anchor bolts

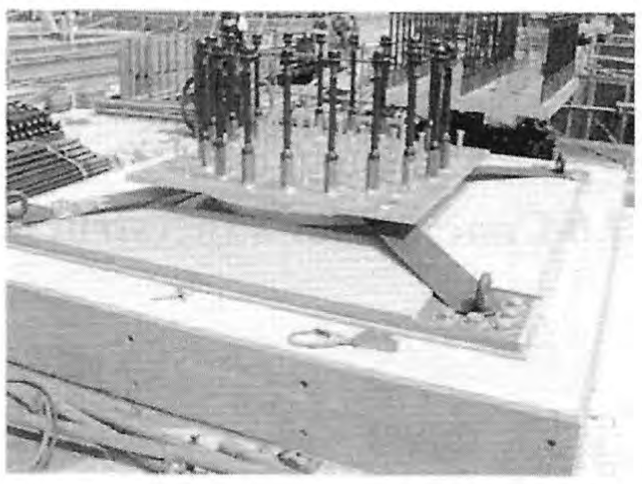

Photo 5.2.13 Anchor bolts (Slider)

@seismicisolation

Arrange rebar for capital

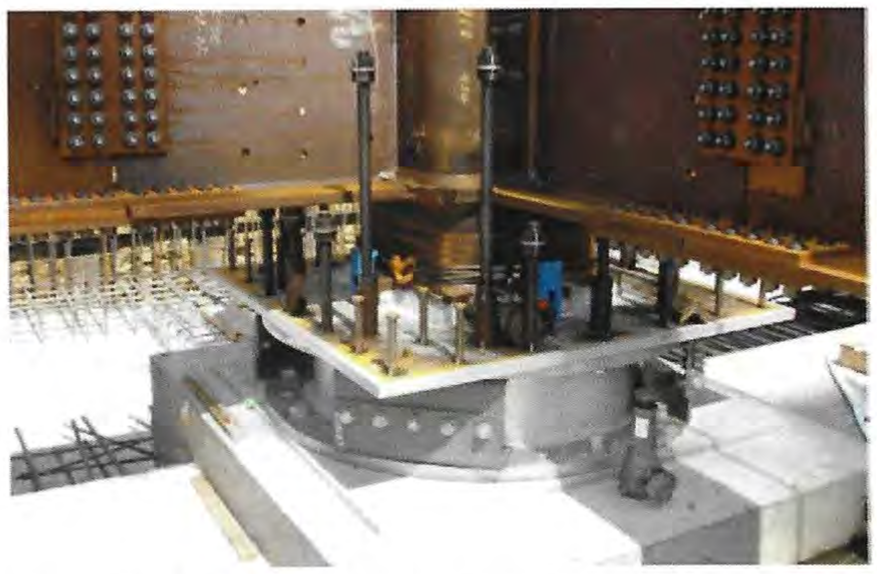

Photo 5.2.14 Before setting forms for capital

Pour concrete for capital

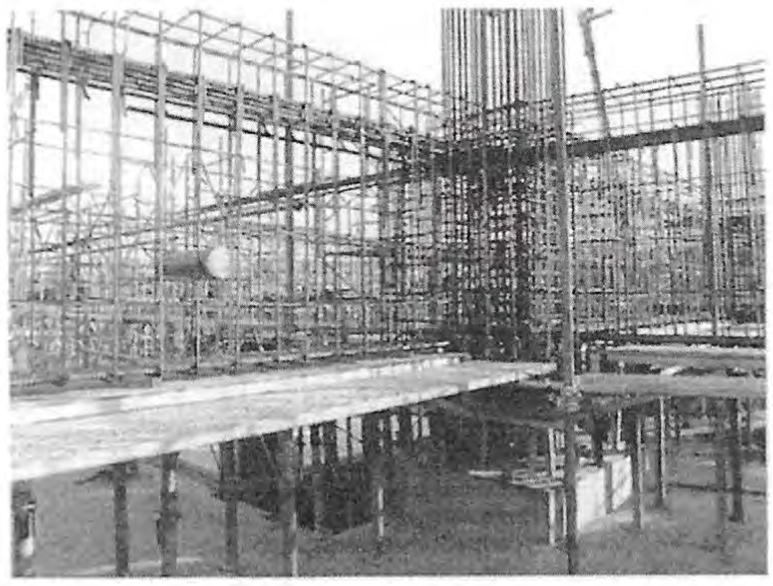

Arrange rebar for capital so as not to interfere with anchor bolts in upper baseplate.

Photo 5.2.15 Arrangement of rebar for superstructure

Construct superstructure

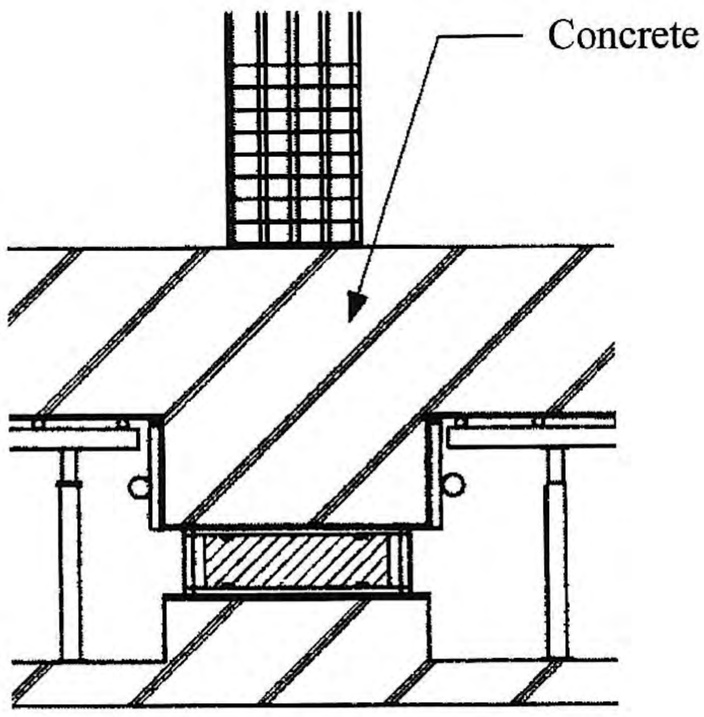

Pour concrete for superstructure in sections.

Cover isolators to prevent scratching of rubber surface.

Figure 5.2.8 Concrete for superstructure

@seismicisolation

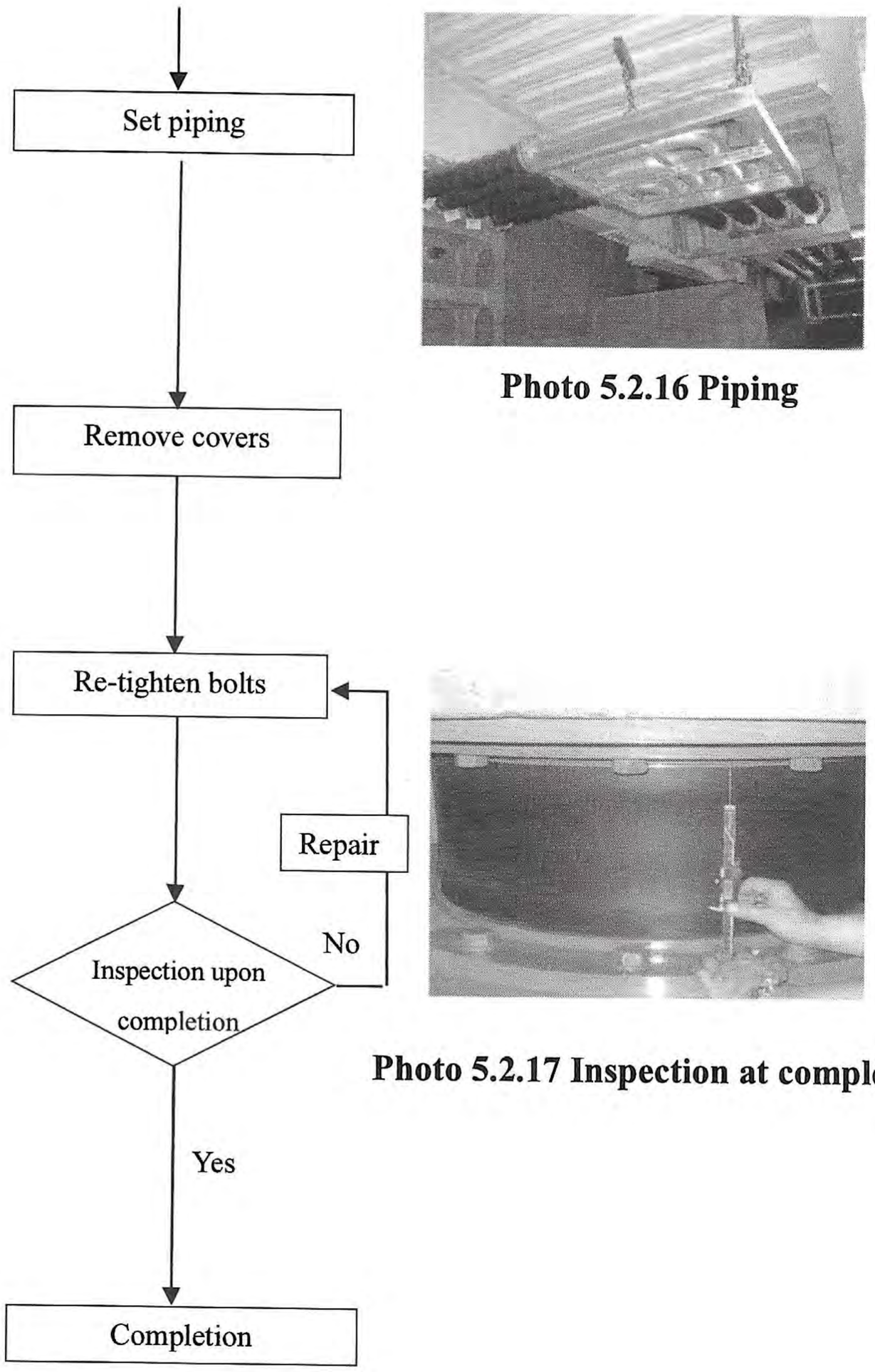

Confirm space to allow for movement of flexible pipe joints and wiring (See Chapter 6).

Photo 5.2.16 Piping

Photo 5.2.17 Inspection at completion

@seismicisolation

5.2.3 Bolting for SI devices to structure

(1) Recommended torque values

Recommended torque values for bolts are shown as follows:

Table 5.2.1 Recommended torque values

Bolt diameter	M16	M20	M22	M24	M27	M30	M33	M36	M39	M42
Torque value (N·m)	100	120	160	200	300	400	500	600	800	1000

(2) Procedure for tightening the mounting bolts of isolator

The diagonal fastening method is commonly used. However, the following problems can occur with this method.

・As the number of bolts increases, the tightening order becomes complicated.

・It is common to tighten in a diagonal pattern for each bolts, however, this method takes much time.

For these reasons, the recommended one-way tightening procedure is described below as a reference:

a) All bolts are tightened by hand.

b) In either clockwise or counterclockwise direction, all the bolts are fastened by a wrench.

c) After 4 to 8 points are tightened in a diagonal pattern at the recommended torque value, either clockwise or counterclockwise

An example of the unidirectional tightening procedure for 16 mounting-bolts is shown in Fig. 5.2.9.

CM should confirm that the torque values of the bolts have been checked again and marked after tightening to the recommended values. A torque of preset type is often used for tightening at the recommended torque value, however, note the following points in the use of wrench:

・Use a calibrated wrench.

・Set the specified position and apply force to the torque wrench.

・Be cautious not to over torque.

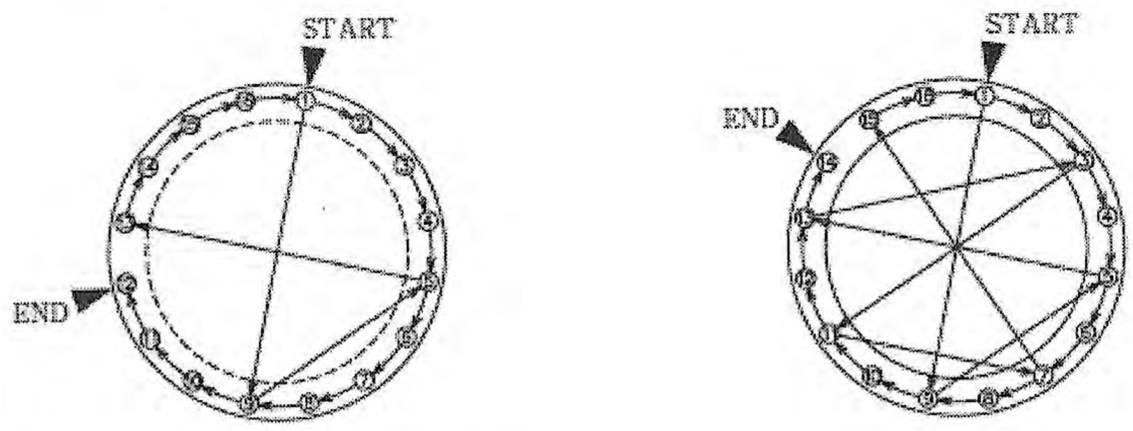

1-9-5-13-14-15-16-1-2-3- - -12 **1-9-5-13-3-11-7-15-16-2- - -14**

Figure 5.2.9 One-way fastening (16 joint-bolts)

@seismicisolation

5.3 Storage and protection of SI devices

During the construction period it is necessary to store and protect SI devices and their related parts to prevent damage due to impact, heat (sparks, flames), chemicals and oil.

(1) Isolators

In general, welding work is prohibited in the vicinity of isolators because sparks from welding could damage isolators. If it is unavoidable to conduct welding in the area, fire resistive protection must be used. Rubber bearings should be covered so as not to sustain scratches or any other damage. Sliders should be covered with an appropriate method upon receiving them. All of these devices should be covered to protect them from rain.

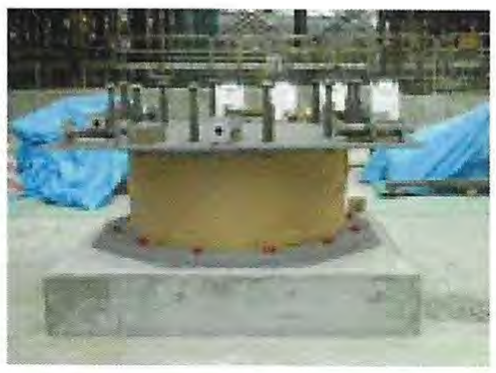

Photo 5.3.1 Example of covering for LRB

Photo 5.3.2 Example of protection for sliding plate

(2) Dampers

Dampers should be protected to prevent deformation.

Photo 5.3.3 Example of protecting for steel damper

@seismicisolation

5.4 Filling method for area under baseplate

CM should confirm that area under the baseplate is completely filled with concrete or grout of the required strength. CM should also confirm that the method for grouting and the material to be used.

The area under the baseplate should be completely filled with concrete or grout in order to properly transfer axial and shear forces from the superstructure to the foundation. Sometimes the flow of concrete and grout is blocked to flow due to the presence of long nuts, stud heads, anchor frames and rebar under the baseplate, which creates air pockets. Therefore, CM should make a construction plan to provide for complete filling of the area. The following are methods for pouring concrete or for filling with grout.

(1) Pouring-concrete method

This method involves pouring concrete into the footing through the hole at the center of the baseplate. Pouring from the center forces air bubbles out to the edges so that they can be expelled. Proper positions of air release and inspection holes should be confirmed. There are mainly two ways to pour concrete, one is by using a special hopper, through which concrete is poured into a hole in the center of the baseplate. The other method is called the "compressive method", in which a high-pressure pipe is connected to the hole and concrete is pumped in.

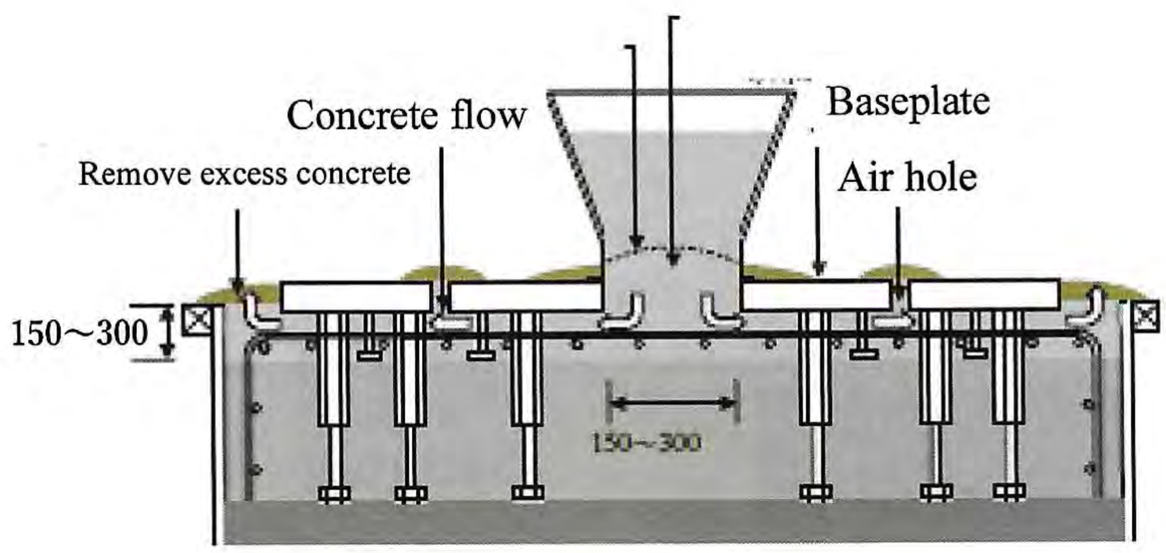

Figure. 5.4.1 Pouring-concrete method

Photo 5.4.1 Pouring of concrete

High-flow concrete does not require the use of a vibrator and it allows concrete to bleed smoothly, and it increases the solidity and has less air in it. High-flow concrete should not be poured over 500mm high. After casting, concrete should be poured to a level higher than the baseplate level to prevent air pockets that could occur through sedimentation.

The strength of high-flow concrete is usually 50-60N/mm^2. An appropriate composition of concrete should be planned, and its performance should be confirmed by test mixing after discussing this with the MFR.

(2) Grout-filling method

With this method the non-shrinkage mortar is injected into a space between the baseplate and the surface of the concrete that was poured previously into the footing. This space is 30-50mm. Grout is injected from one direction or filled from the hole at the center of the baseplate. When grouting material is not specified in the construction plan, CM should select it after discussion with the supervisor regarding the material and its strength. The thickness of the baseplate should be more than 16mm.

@seismicisolation

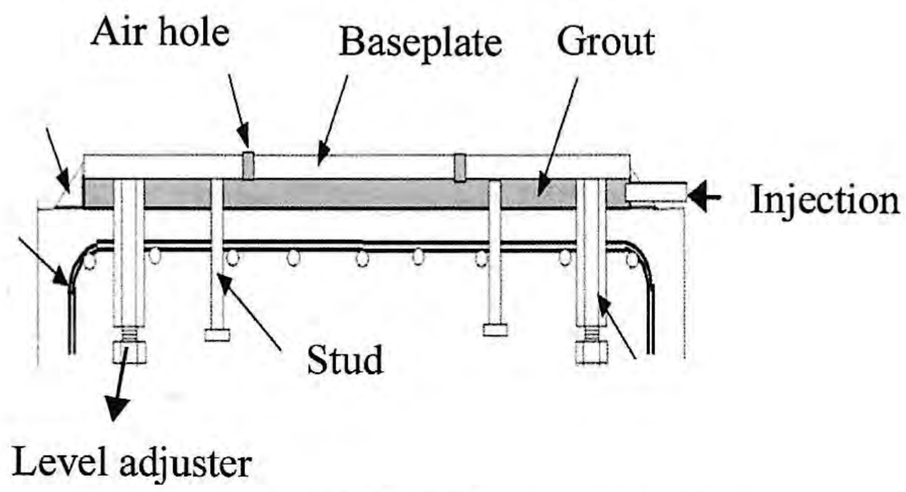

Figure 5.4.2 Filling method

Photo 5.4.2 Grout-filling method

(3) Process of filling concrete in area under lower baseplates

The process of filling concrete under lower baseplates is conducted as follows: (Figure 5.4.3) When high-flow concrete is poured, the items below should be confirmed.

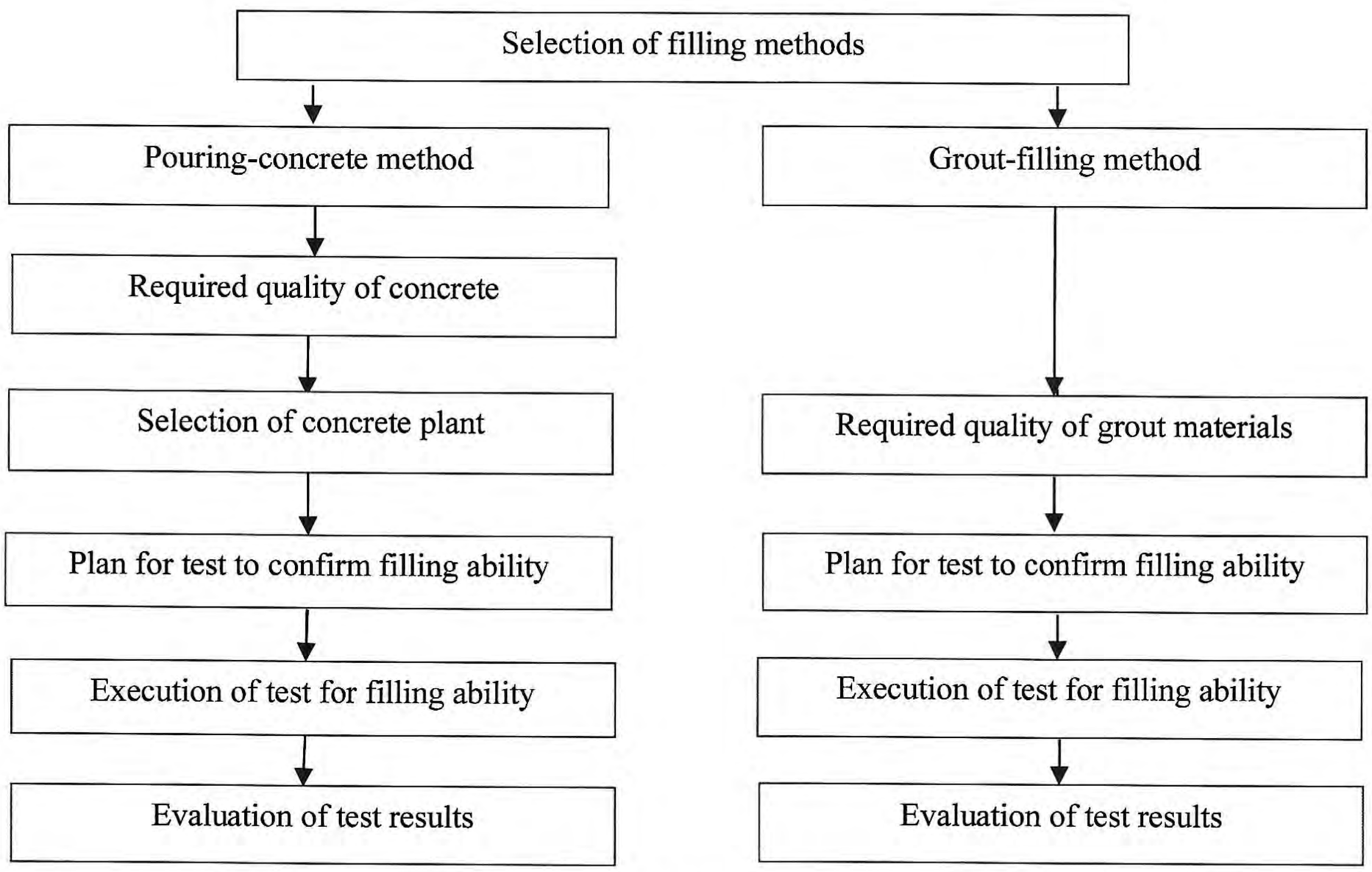

Figure 5.4.3 Flow of filling methods

(4) Management of high-flow concrete

High-flow concrete has high liquidity performance, with an AE water-reducer that does not increase the water content ratio or reduce viscosity. The liquidity of the concrete is controlled by slump flow, and segregation resistance is evaluated by the condition of the dimensions of the concrete spread.

There should be no coarse aggregate in the center of the spread, and separated cement paste should be evenly distributed throughout the concrete spread. Concrete with slump flow of 60cm is usually used. Strict control of the manufacture of high-flow concrete is required. This is due to the fact that the condition of concrete changes according to the quantity of water used.

@seismicisolation

The value of slump loss caused by time and temperature should be checked and the results should be taken into account in the plan for pouring concrete. The following is an example of performance of high-flow concrete:

- Water cement (w/c) ratio: under 40% (35% recommended) to prevent segregation, cracks, bleeding
- Slump flow: 60cm±5cm (60cm±2cm recommended) to maintain filling performance
- 50cm flow time: 3-8sec. to maintain filling performance and segregation resistance
- Value of bleeding: low
- Flow loss: 60cm±5cm after 120min, mixed at 20℃

(5) On-site filling test

Casting conditions vary depending on the shape of the foundation, arrangement of the rebar, size of the baseplate, shape of anchor bolts or studs, quality of concrete and the filling method. The test should be carried out by use of a test device under the same conditions of the actual construction on site. CM should select suitable materials and processes for filling and then decide the items and criteria for control.

(a) Setting of baseplate

(b) Acceptance test of fresh concrete

(c) Pouring

(d) Confirm of filling ratio

Photo 5.4.3 Process of filling-efficiency test

@seismicisolation

(6) Filling-performance test

The main purpose of the filling-performance test is to judge whether the concrete materials, the details of the baseplate and concrete-filling process are suitable or not. CM should decide the criteria of the test after discussing them with the supervisor. For example, the minimum diameter of air bubbles is around 5mm for a thick baseplate. In general, air bubbles of a diameter of 1-2mm have a negligible effect on the filling ratio.

The main points for discussion in the planning stage for the filling test are as follows:

Table 5.4.1 Items concerning filling performance test

To be decided	Measuring methods for filling ratio	Construction
·Long-term vertical load · Effective stress distribution during earthquakes ·Strength of concrete ·Safety factors	·Minimum diameter of air bubbles considered to be vacant spaces ·Distribution and eccentricity of allowable vacant spaces	·Filling material (slump flow, slump loss) ·Filling method ·Filling time

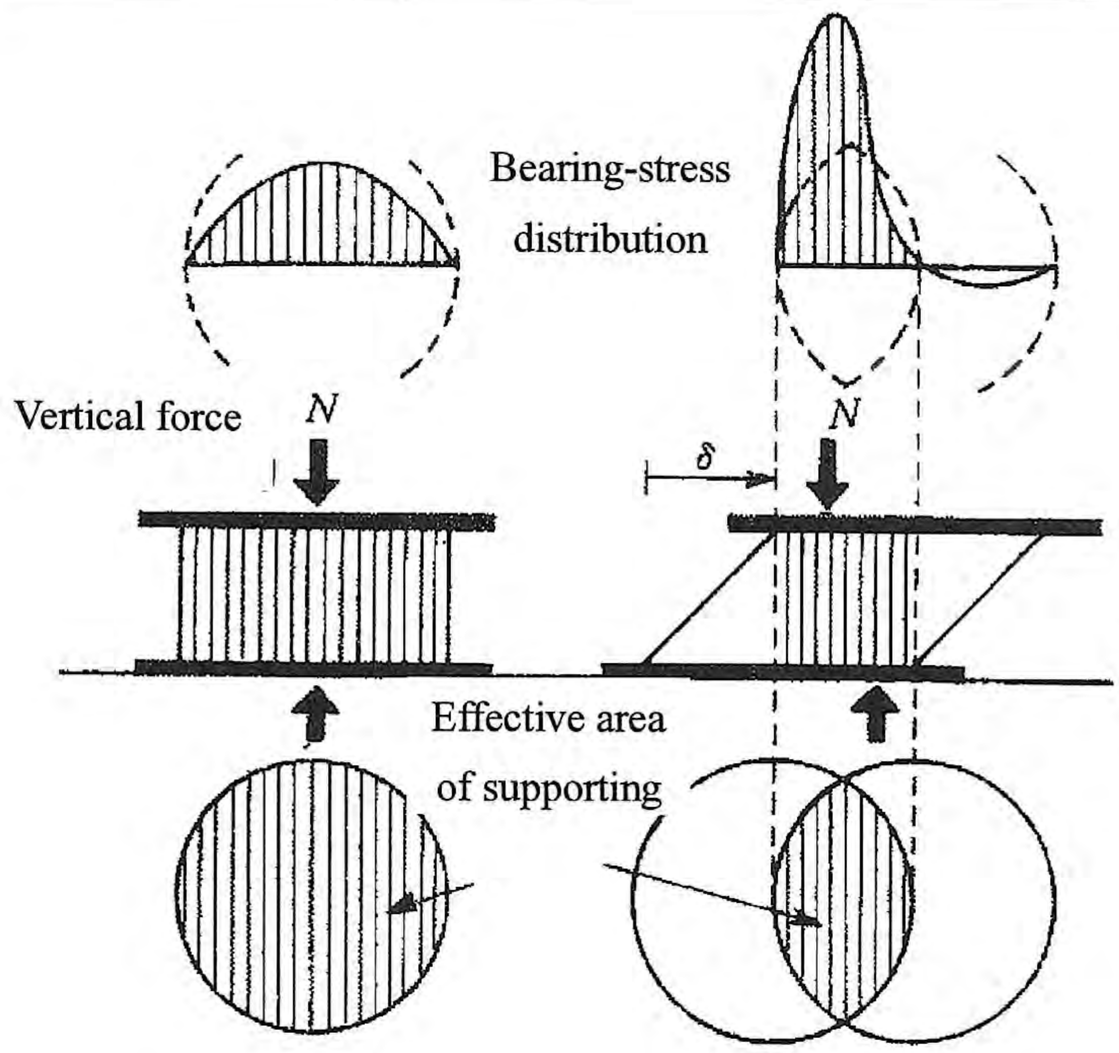

Figure 5.4.4 Effective area of supporting and distribution of bearing stress distribution

After curing the concrete for a certain period, detach the baseplate and confirm the situation. The criterion is defined by the filling percentage of grout or concrete under the baseplate. The percentage is decided based on the maximum stress, pressure distribution, the concrete strength, and the result of structural experiments.

As an example, the test results are shown in Figure 5.4.5, with two filling rates of 90%. The distribution of voids is also an important factor in the judgment of the filling property.

@seismicisolation

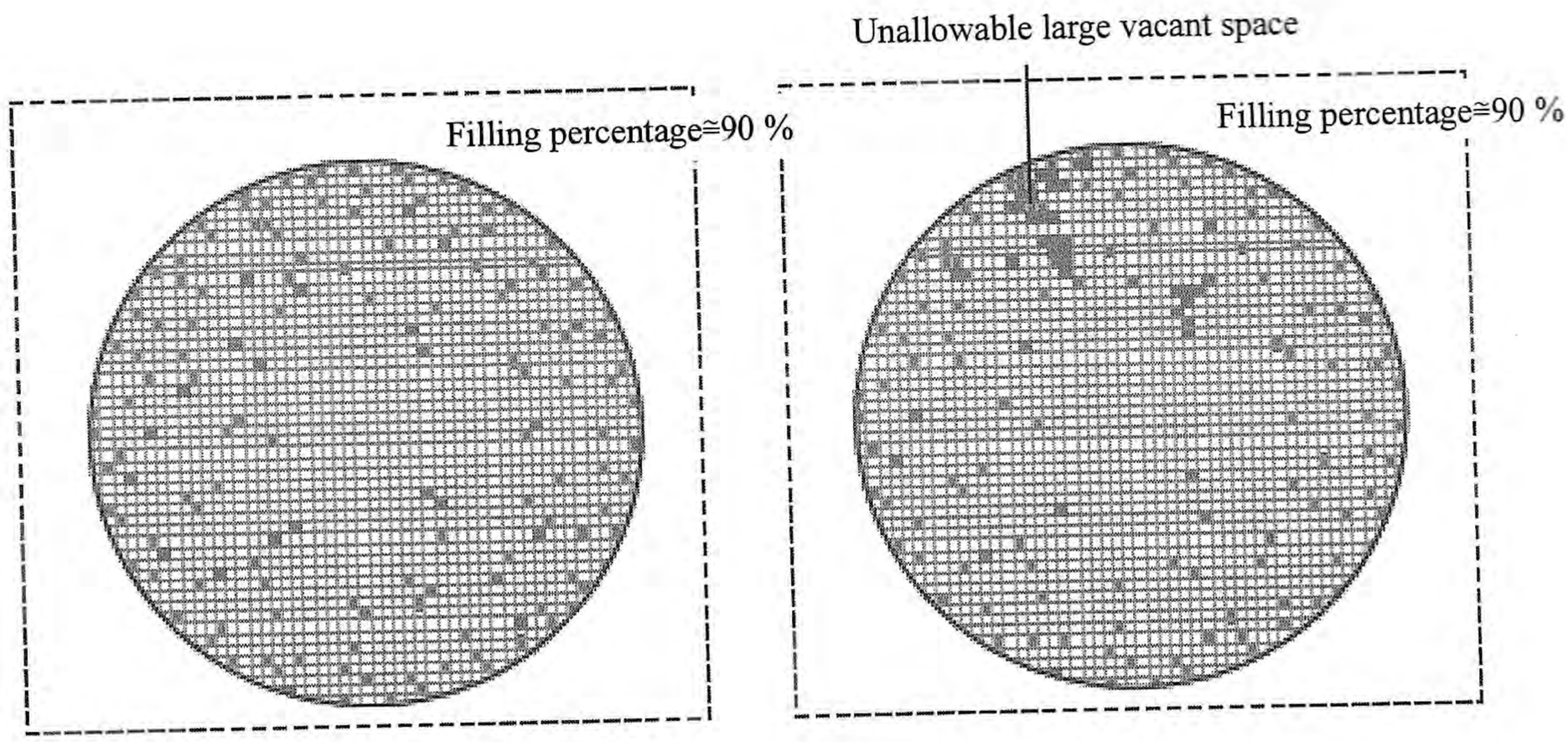

Figure 5.4.5 Comparison of test results

In such a situation as above, the baseplate is divided into several areas and the filling rate is set for each. Table 5.4.2 and Photo 5.4.4 show example of an area divided in to 9 parts, and the criteria.

Table 5.4.2 Items of filling-efficiency test and an example of criteria

	Management items	Criteria	Remarks
1	Filling rate	More than or equal to 90%	Air bubbles for 5mm or more in diameter in order to maintain the filling ratio
2	Rate of each area	More than or equal to 85% of each area	・Air bubble for 5mm or more in diameter ・No partial vacant space
3	Vacant space	・No voids due to bleeding ・No voids in excess of allowable diameter	Allowable diameter

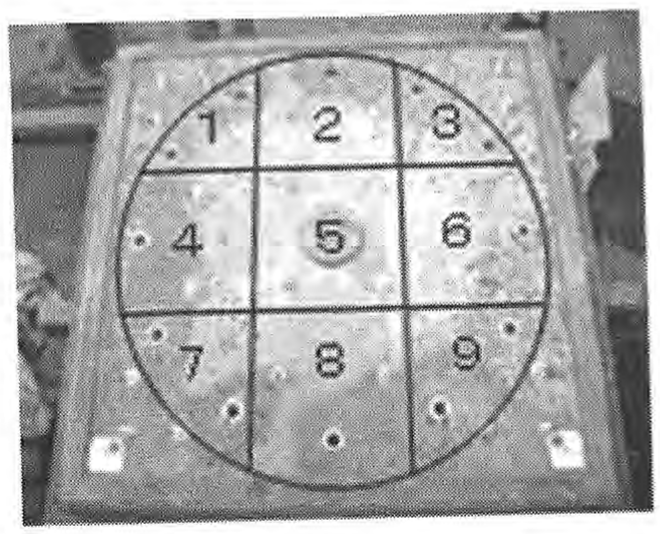

Photo 5.4.4 Marked voids and divided area

@seismicisolation

The allowable maximum pore diameter is less than the thickness of the flange plate and the baseplate combined, or less than twice the thickness baseplate alone. For example, when the plate thickness is 19mm, twice that, 38mm is rounded up to 40mm. The criterion is "the short side length of allowable maximum voids is 40mm in diameter or less, and the total area of allowable maximum voids is 20cm^2, or less".

5.5 Safety management

CM must confirm that all works are undertaken safely during installation of SI devices and construction of SI layer and related parts in accordance with industrial safety laws of the respective countries.

(1) General

a) Safety training must be provided on site for new workers.
b) An appropriate person assigned by CM for SI work must be directly in charge of his workers.
c) The isolation devices are stored in a safe place.

(2) Before each shift

a) The daily work plan, division of work, points of caution and instruction items are clearly described for all workers.
b) Equipment and implements are checked every day by people in charge and defective items must be removed. The results of the inspection must be reported to CM.

(3) During work hours

a) Safe passages are provided for people and vehicles.
b) Anyone who is not concerned with the work is prohibited to enter the delivery site and no one may enter under SI devices suspended from the crane, as well as and the area of the operation of the crane.
c) Experienced workers are assigned for installation of SI devices.
d) Traffic is controlled in/out of the construction site so as not to endanger people in the vicinity.

(4) Before leaving work site

a) The materials and equipment are stored.
b) The work site is cleaned up.

@seismicisolation

5.6 Inspection during construction

5.6.1 Inspection and accuracy for SI devices and related parts

CM should carry out construction management and inspection to confirm performance of SI devices before installation of them.

(1) Confirmation of installation accuracy

It is essential to maintain levelness of elastomeric isolators so as not to interfere with performance of SI buildings. Their horizontal stiffness is extremely low: from 1/2,000-1/3,000 of the vertical stiffness.

For steel or steel reinforced buildings, inaccuracies of positioning of elastomeric isolators cause deformation and distortion. Sliders move under extremely low horizontal force. A slight inclination at the time of installation of those isolators would likely be an obstacle to the performance of the SI system.

(2) Confirmation of accuracy after pouring concrete

After maintaining installation accuracy, the baseplates should be fixed so as to prevent movement by force during pouring of concrete. When the sliding plates are installed under the upper baseplates, sometimes accuracies cannot be achieved because of flexure due to the weight of the concrete. CM must make sure that the baseplate has not been displaced before pouring concrete.

5.6.2 Inspection of SI layer

CM is responsible for construction of SI layer, and for carry out inspections.

(1) Clearance

Construction clearance must be more than design clearance, and the design clearance should be decided in consideration of construction tolerance, and shrinkage and expansion due to temperature change of the buildings.

(2) Protection

Elastomeric isolators could be damaged by fire or shock. Dampers do not perform as expected if cracks develop, such as from shock. It is required to assure that devices are protected during construction.

@seismicisolation

Table 5.6.1 Criteria for the construction accuracy

Management item		Detail	Control value	Content of inspection	
				Place	Method
LRB	Setting of lower baseplate	Horizontal accuracy	Inclined: 1/400	Orthogonal 2 directions	Leveler
		Positioning accuracy	X,Y,Z ±5mm	Center point	Ruler
	Protection	Cover rubber parts with protecting material to prevent damage. Do not place anything flammable nearby.			
Slider	Setting of sliding plate	Horizontal accuracy	Inclined: 1/500	Orthogonal 2 directions	Leveler
		Positioning accuracy	X,Y,Z ±5mm	Center point	Ruler
	Protection	Cover rubber part and sliding surface with protecting material to prevent damage. Do not place anything flammable nearby.			
Damper	Setting of lower baseplate	Positioning accuracy	Inclined: 1/500 Warp: 1/400 & 4mm	Orthogonal 2 directions and center point	Leveler
		Protect from shock	X,Y,Z ±5mm	Center part	Ruler
	Protection	Cover dampers with protecting material to prevent damage.			
Clearance	Space between structure and wall	Vertical accuracy	More than design value	All boundaries	Ruler
	Berm and wall				

Table 5.6.2 Criteria for construction accuracy
(Steel erection directly on baseplate)

Management item		Detail	Control value	Content of inspection	
				Place	Method
Isolator	Setting of lower baseplate	Horizontal accuracy	Inclined: 1/500 Warp: 1/500 & 3mm	Orthogonal 2 directions and center	Leveler
		Positioning accuracy	X,Y,Z ±3mm	Center point	Ruler
	Protection	Cover rubber parts with protecting material to prevent damage. Do not place anything flammable nearby.			

@seismicisolation

5.7 Inspection at completion of SI building

CM must carry out inspection upon completion of SI building to confirm that SI devices and related parts are installed appropriately and that the building meets performance requirements of SI system.
CM should get approval of inspection reports from the supervisor. Then CM submit them to the owner or the building manager and the supervisor when the building is handed over. The owner or the building manager keeps the reports.
When any malfunctions are found in the inspection upon completion, their repairs can be costly and time consuming. It is highly recommended to carry out the inspections after every construction stage.

(1) Person in Charge

The inspection should be carried out by a person designated by CM.

(2) Inspection

CM should make the inspection plan and designate a person to carry out the inspection after approval by the supervisor. It is very important to measure the initial value for building maintenance.

The items and the methods of inspection of isolation devices and relative parts are referred to in "Maintenance Standard for SI Buildings", published by JSSI. Table 5.7.1 and Photos 5.7.1-5.7.8 show the positions, items and methods for inspection that are recommended by JSSI.

Before inspection check the tightness of the bolts, as they sometimes become loosened due to the load of the superstructure. If they have loosened, tighten them and mark them. The equipment engineer should confirm the following:

- Clearance between equipment pipes and the superstructure
- Clearance between equipment pipes

(3) Confirmation of the marks for maintenance

For maintenance of SI buildings scheduled inspections should be carried out based on the results of the inspections at completion in order to assure the functions of the buildings. Measurement of deformation of isolation devices and clearance should always be taken in the same places. The measurement positions should be marked. "Maintenance Standard for SI buildings", states that the marks should be specified in the design documents and confirmed at the time of inspection at completion.

The following are types of marks:

a) To indicate that bolts of SI devices are sufficiently tightened (carried out by CM after refastening)
b) To measure vertical and horizontal displacement of SI devices (carried out by the inspection engineer)
c) To measure of clearances of SI layer and the building perimeter (carried out by the inspection engineer or CM for embedded steel plates)
d) To set a plumb bob and then a plate with intersecting lines in order to measure the building position (carried out by CM)

(4) Correction

When design criteria are not suitable, CM must discuss with the supervisor and correct the part(s) that did not meet the criteria.

@seismicisolation

(5) Submission and maintaining of results of inspections

For SI buildings it is obligated to carry out the scheduled inspections for maintenance after completion of construction. The records of the completion inspection are important for preserving initial values for building maintenance. CM should keep the inspection data on paper and submit them to the supervisor, and either the owner or building manager.

@seismicisolation

@seismicisolation

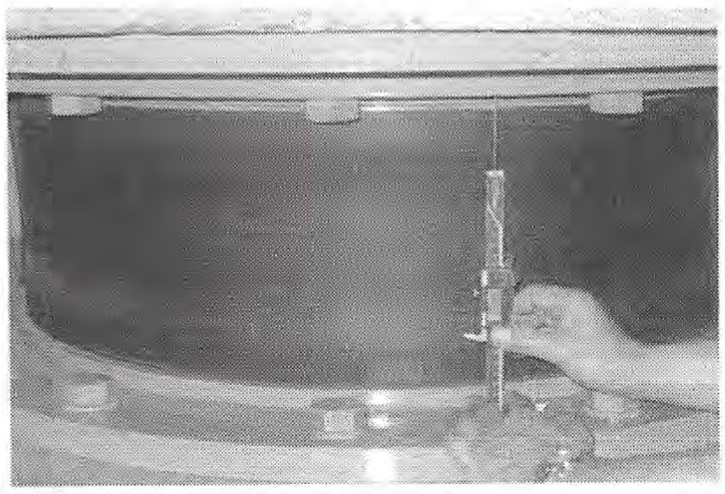

Photo 5.7.1 Vertical displacement of LRB

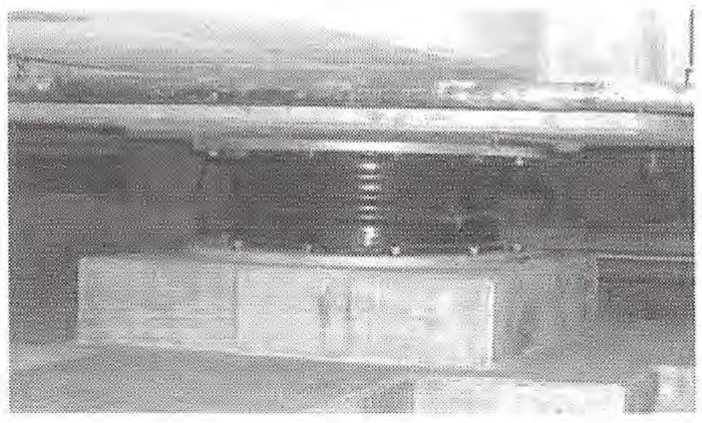

Photo 5.7.2 External inspection of LRB

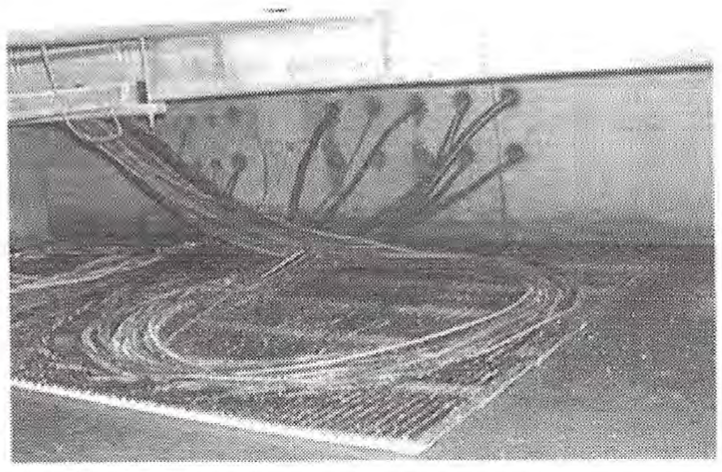

Photo 5.7.3 Confirmation sufficient length of electric wiring

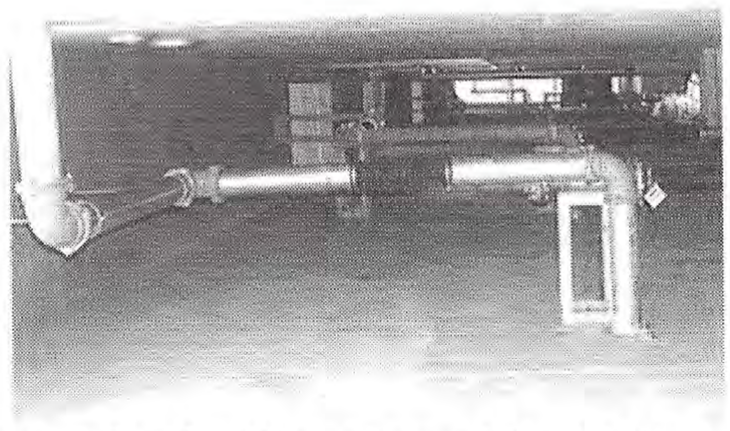

Photo 5.7.4 Confirmation of flexibility of piping

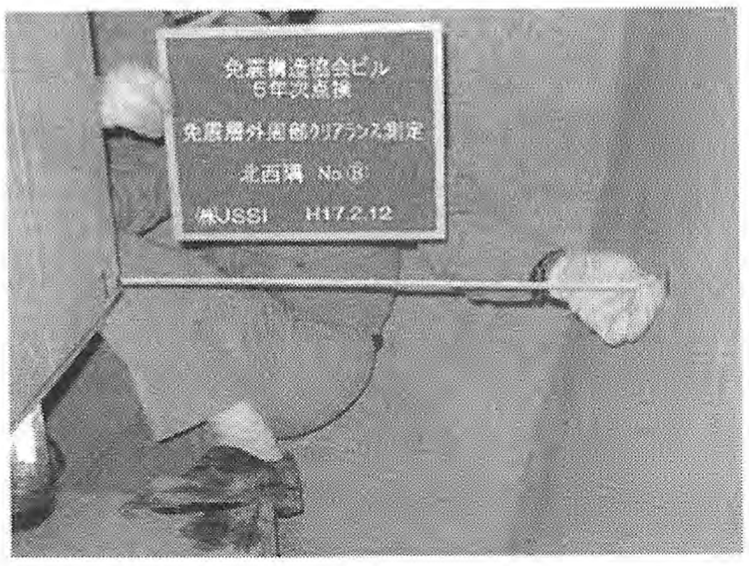

Photo 5.7.5 Confirmation of clearance

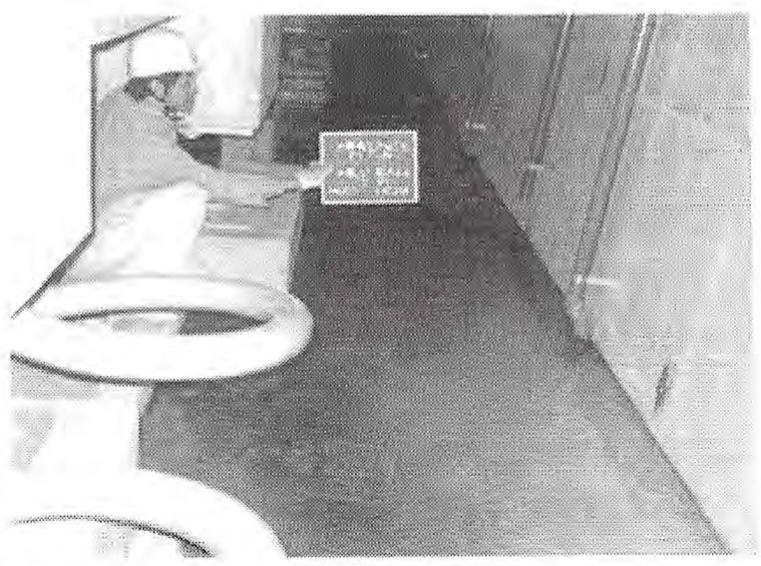

Photo 5.7.6 Confirmation of drainage

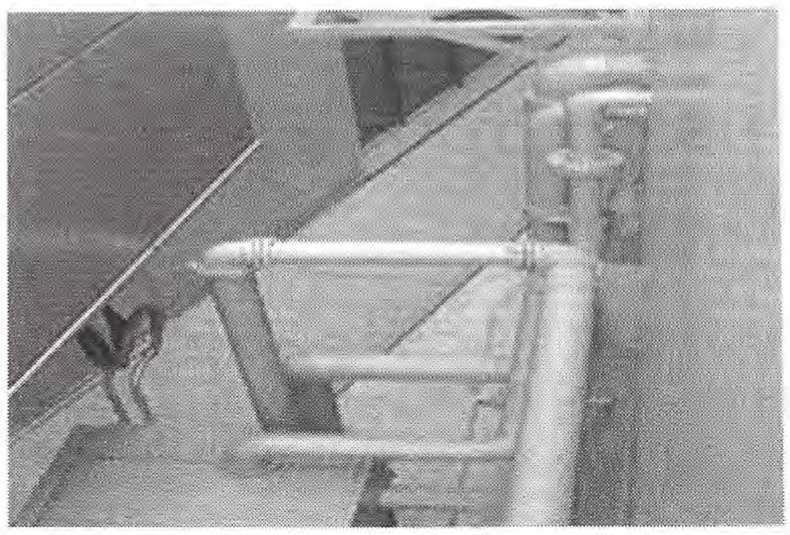

Photo 5.7.7 Confirmation of clearance between the piping and the non-isolated parts

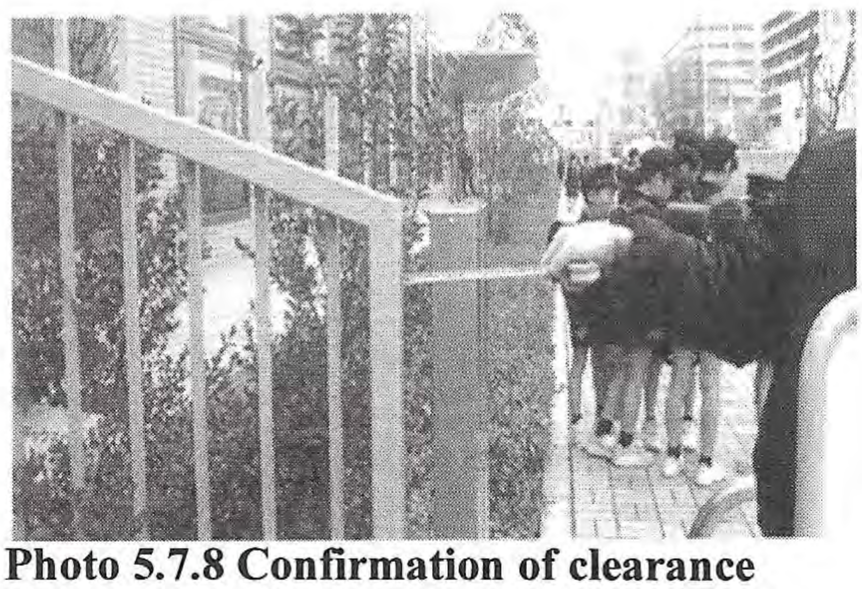

Photo 5.7.8 Confirmation of clearance between fence and pole of non-isolated parts

Table 5.7.1 Inspection items and inspection methods at completion

Place or device			Inspection item		Inspection method	
	Device	Detail	Item	Content: check for	Method	Accuracy
SI device	Isolator	・LRB ・Slider	Appearance	Damage (scratches, length or depth)	・Visual ・Measure	
			Steel portion	Corrosion	Visual	
				Slack in bolts	Visual	
			Connection parts	Damage	Visual	
			Deformation	Vertical value	Measure	
				Horizontal value	Measure	1mm
			Dust cover	Damage	Visual	
	Damper	Hysteretic	Appearance	Damage	Visual	
			Steel portion	Corrosion	Visual	
				Slack in bolts	*Visual*	
			Connection parts	*Damage*	*Visual*	
			Dimension	Sizes	Measure	1mm
			Deformation	Horizontal value	Measure	1mm
			Movable range	Contact with other parts	Visual	1mm
		Fluid	Appearance	Damage	Visual	
			Steel portion	Corrosion	Visual	
				Slack in bolts	Visual	
			Connection part	Damage	Visual	
			Deformation	Movable length	Measure	1mm
			・Fluid ・Oil	Leakage	Visual	
Fireproof-ing	Fireproofing for devices		Appearance	Damage	Visual	
			Connection part	Damage	Visual	
			Gap between fireproofing	Gap value	Visual	1mm
			Movable range	Obstacles	Visual	1mm
SI layer	Clearance between building and retaining wall	Measurement points	Horizontal clearance	Clearance value	Measure	1mm
			Vertical clearance	Clearance value	Measure	1mm
			Marking points	Confirm marks	Visual	
	Situation in the layer		・Combustibility ・Obstacles	・Combustibility ・Obstacles	Visual	
			Drainage	・Leakage ・Condensation	Visual	
	Position of building	Plumb bob	Setting point	Position	Visual	
			Movable range	Moved value	Measure	1mm
Piping Wiring	Flexible joints for piping	・Supply-water pipe ・Drainage pipe ・Gas pipe	Setting place	Position	Visual	
			・Fixed frame ・Hanger	Corrosion	Visual	
				Slack in bolts	Tap with mallet	
				Leakage	Visual	
		・Piping ・Pipe rack	Clearance between each other	Clearance value	Visual	

@seismicisolation

	Electrical wiring	・Electric wire ・Corresponding cable ・Lightening cable	・Setting position	Position	Visual	
			・Following ability	Sufficient length	Visual	
Building perimeter	Building peripheral	Structure and berm	Clearance	Clearance value	Visual	1cm
		Berm and wall	Clearance	Clearance value	Visual	1cm
Others	Indication board		Setting place	Place	Visual	
	Tracer for displacement		Setting place	Place	Visual	
			Movable range	Moved value	Measure	
	Malfunction		Situation	Report	Visual	

@seismicisolation

6. Setting of pipe joints

Pipe joints and the related parts should be set in accordance with the process in the construction plan.

6.1 Products

(1) Date of receiving products

CM decides after consultation with MFR the quantity to be delivered and the delivery date.

(2) Receiving / unloading

CM confirms the product name, number of products, condition, etc. upon receipt of goods.

(3) Storage

The storage location must be a place where there is no possibility of damage occurring to the product.

6.2 Setting

In the setting of pipe joints, it is necessary to assure the range of movement. The pipe joints are secured by fixing them on to the building and foundation. CM confirms that the pipe joints, connections and pipe flanges are appropriately installed. (Figure 6.1.1)

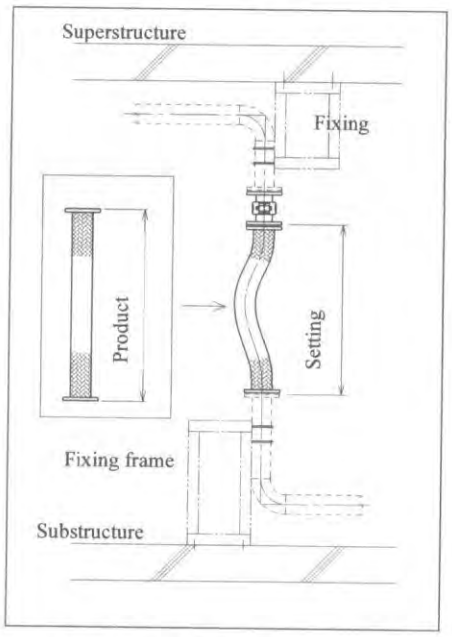

Figure 6.1.1 Pipe joints

6.3 Important items concerning connections

The installer performs construction so as to prevent leakage at connection parts. When connecting, the installer must pay attention to the following:

a) Make sure that pipe joint sealing parts are smooth and flat. If there are burrs or protrusions on the flange surface, the packing could get damaged.

b) Insert the mounting bolts from the side of pipe joint and tighten the nuts from the other side.

c) After tightening the mounting bolts diagonally, tighten all the bolts in the clockwise direction at the specified torque. The reference value is stated in the MFR's instruction manual.

@seismicisolation
@seismicisolation

7. Construction of mid-story SI system buildings

CM should confirm important points specified in design documents regarding a mid-story SI system. CM should also discuss methods of fire protection with the supervisor.

7.1 Outline

Buildings with SI layer at the mid-level section of stories of superstructure are called mid-story SI system buildings. In these buildings, input acceleration of earthquakes is not reduced in the lower part of SI layer. For ordinary SI buildings, SI layer is located beneath building and it includes the moat, but when a mid-story SI system is adopted, a moat is not necessary. In addition, it is sometimes applied to prevent from flooding.

A mid-story SI system is classified as shown in Figure 7.1.1, based on the installation location of SI layer. As shown in Figure 7.1.2, SI layer may be used as a use room for occupancy, a parking lot, or the like.

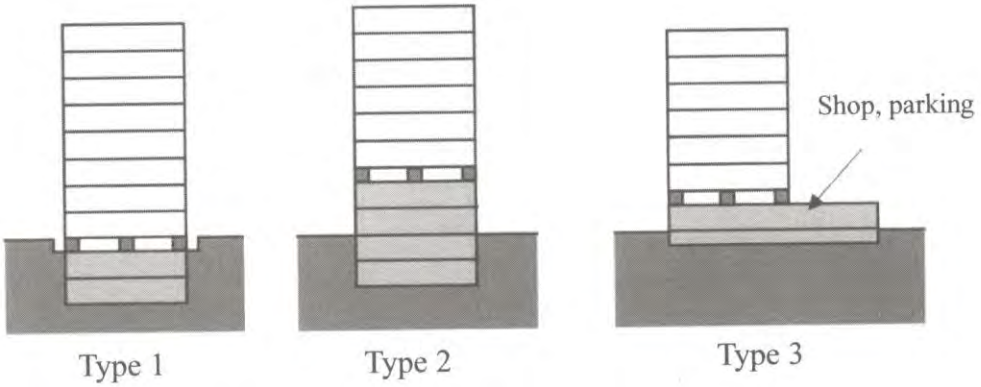

Figure 7.1.1 Story with SI layer

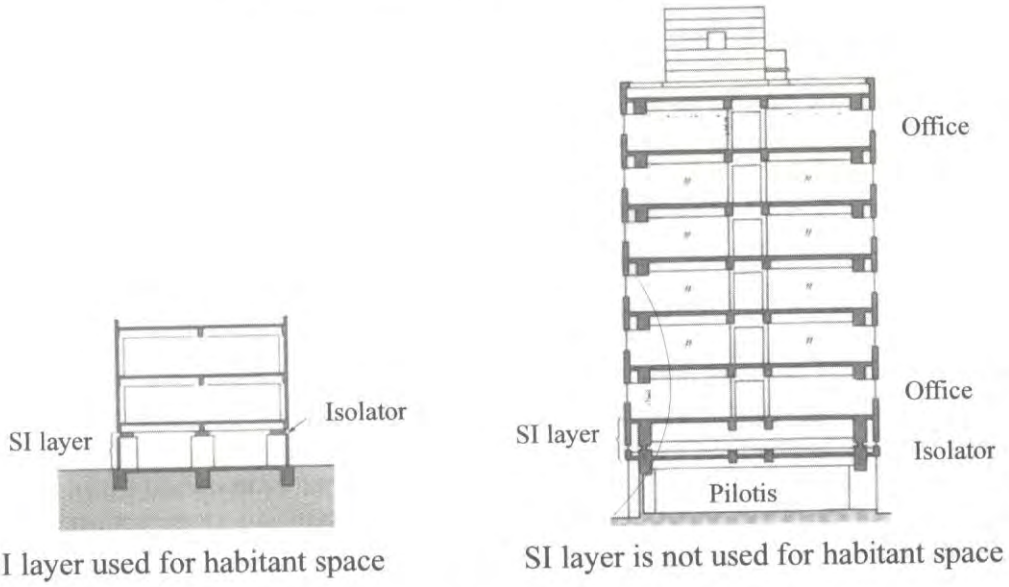

Figure 7.1.2 Type of SI layer

@seismicisolation

When the isolation layer is utilized in a habitant space, isolators are installed on the tops of the columns. To maintain accurate positions, anchor bolts of the lower baseplate are set on the column, after which high-flow concrete is poured in to the column. Photo 7.1.1 shows the construction process.

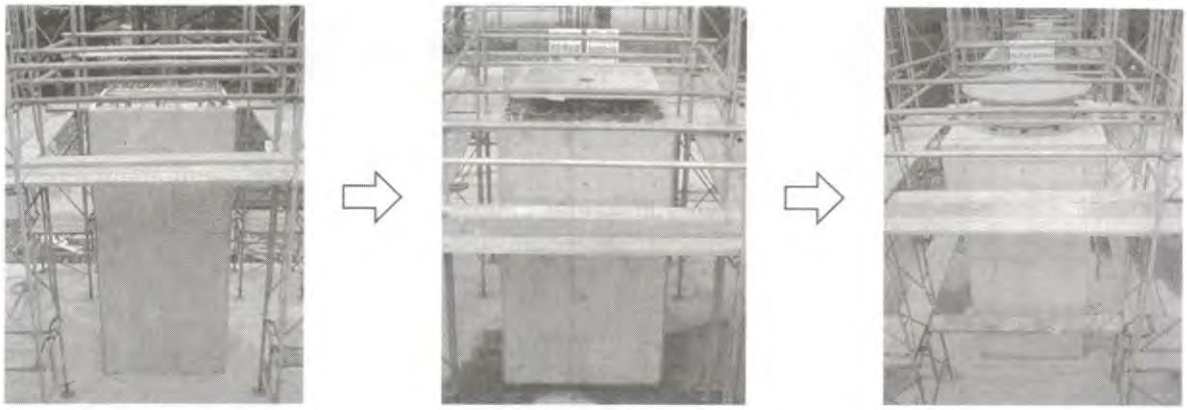

Construction of lower part of column **Setting of lower baseplate** **Setting of isolator**

Setting of upper baseplate

Photo 7.1.1 Construction process

7.2 Important items

Special countermeasures required for a mid-story SI system are as follows:
(1) Displacement of outer- and inner-walls of SI layer
(2) Displacement of stairs passing through SI layer
(3) Displacement of elevators and shafts passing through SI layer
(4) Pipe joints passing through SI layer
(5) Fire protection

(1) The following functions of displacement of outer- and inner-walls of SI layer

Weathering and fireproofing must be applied in the gaps of the external walls of SI layer. (See Photo 7.2.1 and Figure 7.2.1) Fire-resistant materials should be examined to ensure that they follow the movement of the building. These materials should not be damaged by relative displacement between the lower and upper parts of SI layer during earthquakes. It should be assumed that these materials will return to the original state after earthquakes.

@seismicisolation
@seismicisolation

Photo 7.2.1 Gaps of external walls

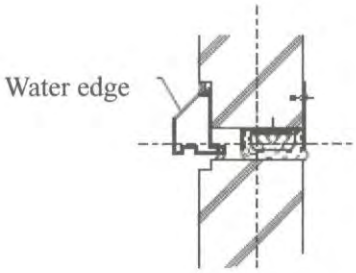

Figure 7.2.1 Details of gaps

(2) Details of stairs passing through SI layer

Stairs passing through the isolation layer are usually hung from the superstructure. Clearance between stairs and structure around them should be maintained (Figure 7.2.2).

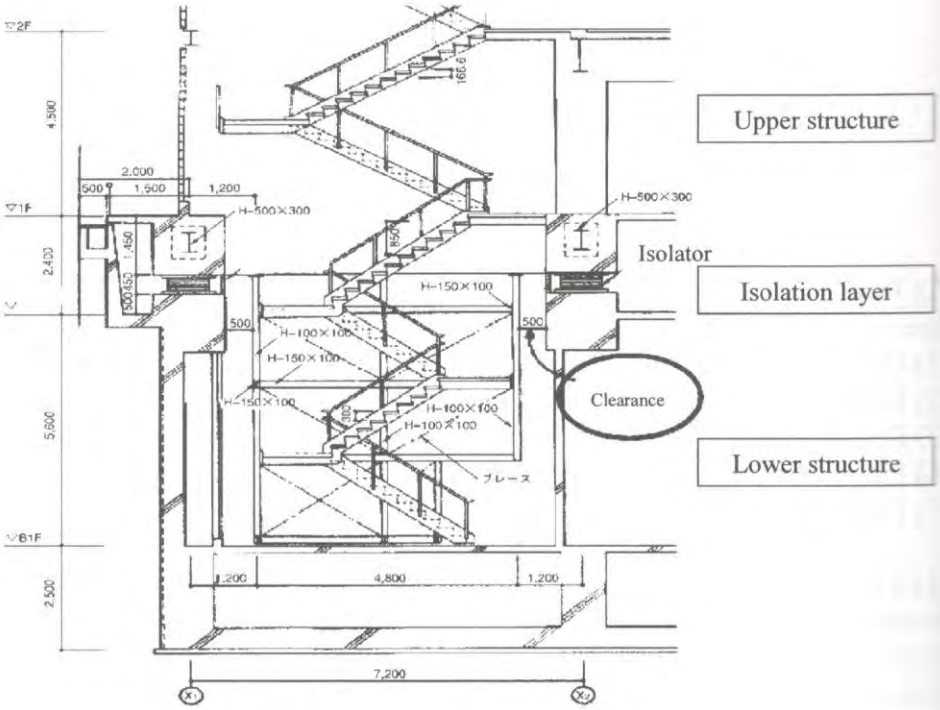

Figure 7.2.2 Details of stairs

@seismicisolation

(3) Details of elevators and shafts passing through SI layer

It is necessary to maintain vertical clearance under the elevator shaft (Figure 7.2.3).

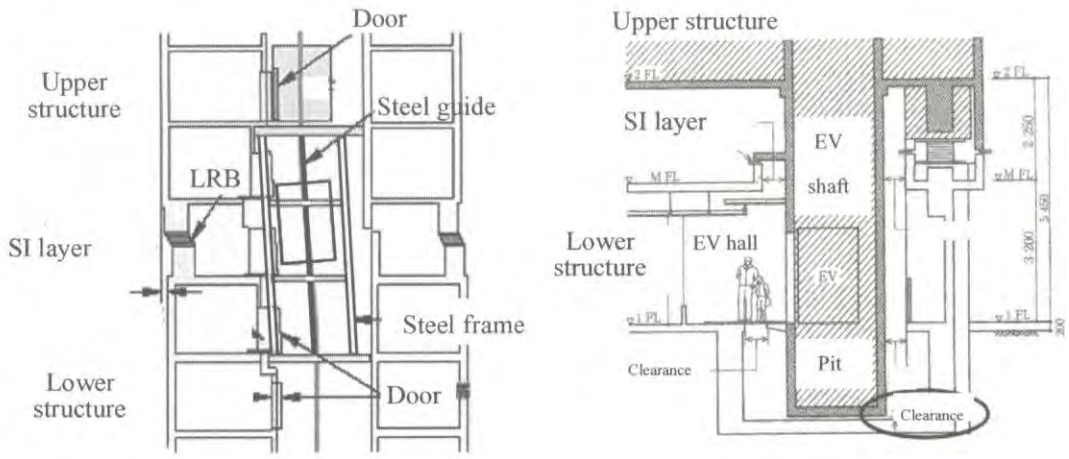

Deformable elevator shaft as countermeasure to earthquakes

Suspended elevator

Figure 7.2.3 Elevators corresponding to SI and conventional elevators

7.3 Fireproofing of SI layer

If there might be a risk of fire at SI layer, it is necessary to confirm fire prevention measures, such as the treatment method of the fire prevention block and fire-resistant covering of isolator.

(1) Important items for construction of fire block in SI layer

CM should confirm methods for setting of fireproofing for isolators columns (Table 7.3.1).

Table 7.3.1 Checklist of fireproofing work

	Items	Treatment
Fireproofing for devices	Sufficient space for installation of fireproof materials	Change fireproof materials
	No interference of fireproofing materials with equipment	Change equipment
	For detail inspections of fireproofing for isolators	Change specification of fireproof materials

@seismicisolation
@seismicisolation

(2) Examples of construction for fireproofing

a) Movable-panel style

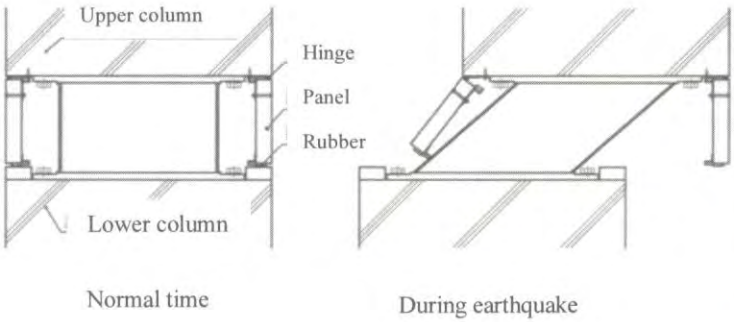

Figure 7.3.1 a) Examples of fireproof construction

Movable-panel style

Photo 7.3.1a) Examples of fireproof construction

Devices can be inspected by opening the door.
Residual displacement can cause gaps.

b) Multi-stage type

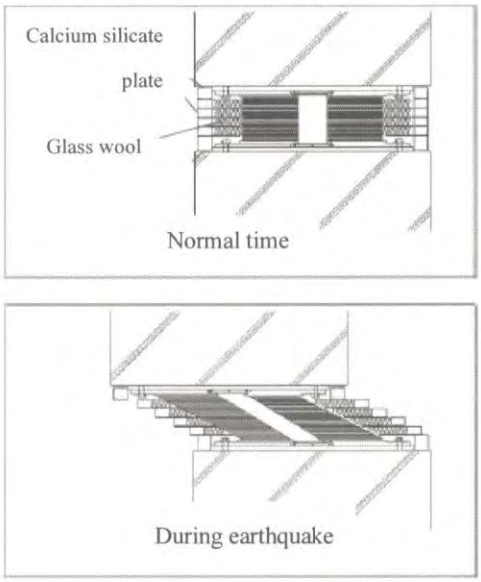

Figure 7.3.1 b) Examples of fireproof construction

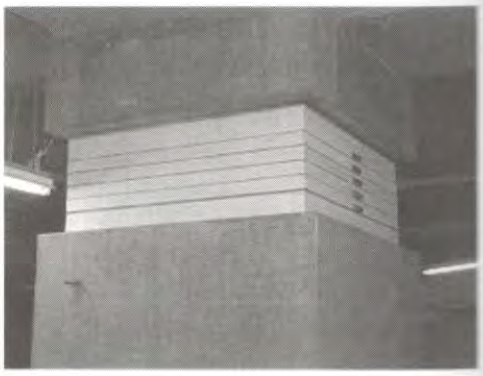

Multi-stage type

Photo 7.3.1b) Examples of fireproof construction

Devices can be inspected by unfastening the buckles.
Residual displacement seldom causes gaps.

@seismicisolation

8. Appendix

8.1 Inspection of devices and performance tests for SI devices

(1) Instructions for production and inspection

CM confirms the production and inspection procedures written by the producer and submits them to the construction supervisor. CM also confirms that the production and inspection procedure is the same as the content of the design documents and consults and coordinates with the construction supervisor regarding the contents, if necessary, for construction.

(2) Material inspection

CM confirms that the materials for SI devices are in accordance with the certified production and inspection instructions. Generally, this is done through an examination of physical properties of material to be used, or documents, such as the mill sheet.

(3) Appearance inspection

CM visually checks that corrosion preventive treatment is carried out according to the design documents and the production and inspection procedure manual, and assures that there are no scratches, obvious deformations and peeling of paint.

(4) Inspection of dimension

CM confirms that the measurement inspection is carried out according to the manufacturing and inspection procedure manual. Measurement inspection contents differ depending on the type of SI devices. The height of products, the inclination of the upper and lower flange plates, the deviation in the horizontal direction, the plate thickness and the position of the mounting bolt hole, are less than the allowable values specified in the design documents.

(5) Performance tests

CM checks whether the performance test for isolators is performed according to the manufacturing and inspection procedure manual of MFR. The main inspection items are as follows:

- Vertical and horizontal stiffness of isolators
- Intercept load and the equivalent damping factor of isolators with damping
- Friction coefficient of sliders

Regarding dampers, although it may be confirmed by documents such as those of the production results of MFR, if it is easy to do a performance test on an actual damper, such as an oil damper, it should be done. The judgment criteria shall be accepted for products within the permissible range, as indicated in the production and inspection procedure, which includes the design documents.

Although in principle performance tests are carried out for all products, a number of tests are conducted by omitting some on-site inspections, and for other products, a pass/fail judgment can be made by confirming results of the manufacturer's self-inspection report. When correcting the measurement procedure according to the test conditions, such as temperature management, loading speed or validity of the measuring-instrument calibration certificate, CM confirms that correcting method is suitable for "Instructions for manufacture of SI devices and their inspection"

Even if the laminated-rubber type isolators all have the same diameter, the performance varies depending on its stiffness, the number of such isolators, and the size of the plugs.

Sliders with elastomer have different rubber stiffness and different numbers of layers of

@seismicisolation
@seismicisolation

rubber, and have different coefficients of friction, such as high-friction sliders and low-friction sliders. CM checks whether the performance of the SI devices described in the design documents satisfies the specifications, whether the material to be used is consistent with the specified usage, whether the manufacturing accuracy is consistent with the specified usage, all with consideration given to the installation of the SI devices.

Examples of the performance inspection methods of each device are shown in following sections.

8.2 Quality control and performance test of LRBs

Table 8.2.1 Quality control of LRB

PIC: Person(s) in charge

	Inspection item			Frequency	Criteria	Treatment	PIC	
							MFR	CM
Material test	Physical properties of rubber	Hardness		Once per project	As stated in specifications	Reject and demand new device	D	D
		Tensile stress						
		Tensile strength						
		Elongation						
	Steel-mill sheet			All	As stated in specifications	Reject and demand new device	D	D
	Lead-mill sheet			Once per ingot	As stated in specifications	Reject and demand new device	D	D
Visual inspection	Isolators right after production			All	No scratches	Remediation	M	C
Dimension test	Isolator height			All	±1.5% & ±6mm	Remediation, or reject and demand new device	M	C
	Inclination of flange				0.5% of flange dia. & 3mm			
	Outer diameter of rubber				±0.5% & ±4mm			
	Outer diameter of flange				±3mm			
	Difference of flange				Less than or equal to 5mm			
	Pitch of connecting-bolt hole				±1.2mm			
	Hole diameter of connecting-bolt				±0.5mm			
Anti-corrosion method	Membrane thickness			More than 50% for each type	As stated in specifications	Remediation	M	C
Performance Test	Vertical		Vertical Stiffness (*Kv*)	All	±20%	Reject and demand new device	M	C
	Horizontal properties	NRB	Horizontal Stiffness (*Kh*)		±20%			
		LpRB	Stiffness after yielding (*Kd*)		±20%			
			Intercept load (*Qd*)					
		HDR	Equiv. stiffness (*Keq*)		±20%			
			Equiv. damping (*Heq*)					

Note: C: Inspection with CM in attendance M: Inspection by MFR
D: Specified in design documents NRB: Laminated natural-rubber bearing
LpRB: Laminated-rubber bearing with lead plug
HDR: High-damping laminated-rubber

@seismicisolation

Table 8.2.2 Method of confirmation of dimensions of LRB

Inspection item	Measurement
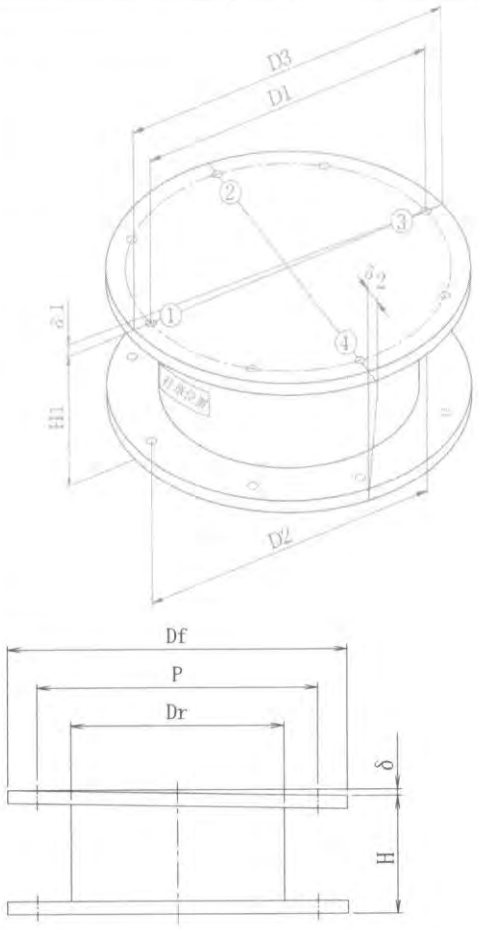	Isolator height: H1 ・Measure 4 orthogonal points with caliper. The average value should be modified by temperature compensation.
	Inclination of flange: δ1 ・Larger value of two orthogonal inclinations
	Outer diameter of flange: Df ・Measure with tape measure.
	Outer diameter of rubber: Dr ・Measure the inner diameter of metal mold.
	Difference of flange: δ2 ・Measure two orthogonal points using square and gap gauge.
	Connecting-bolt pitch: P ・Measure with tape measure. ・Check with template.
	Hole diameter of bolts ・Measure with caliper.

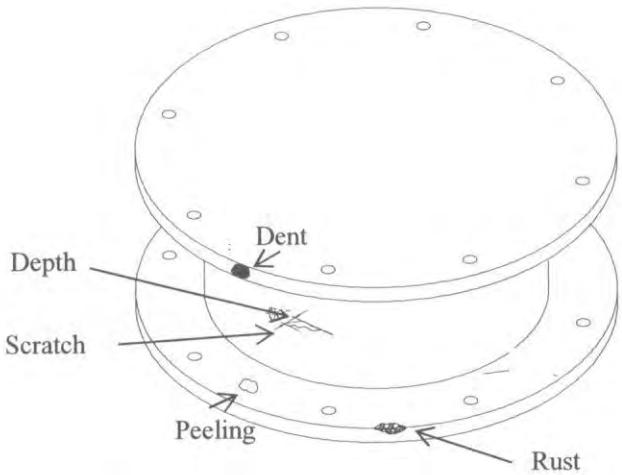

Figure 8.2.1 Image of damage and deformation of LRB

@seismicisolation

(1) Example of performance test of natural laminated-rubber bearing (S. Company)
For performance test for natural laminated-rubber bearing, CM should confirm that the items are inspected for all devices, using the methods shown in Table 8.2.3.

Table 8.2.3 Items for performance test of natural laminated-rubber bearing

Item	Method
Vertical-spring constant	After three cycles of loading at ±30% of load amplitude, with vertical load equivalent to standard stress, calculate using the max-displacement point and max-load point, and minimum-displacement point and minimum-load point of the third cycle (Figure 8.2.2).
Horizontal-spring constant	After three cycles of loading at ±100% shear strain (γ), with vertical load equivalent to standard stress, calculate using the max-displacement point and max-load point, and minimum-displacement point and minimum-load point of the third cycle (Figure 8.2.3).

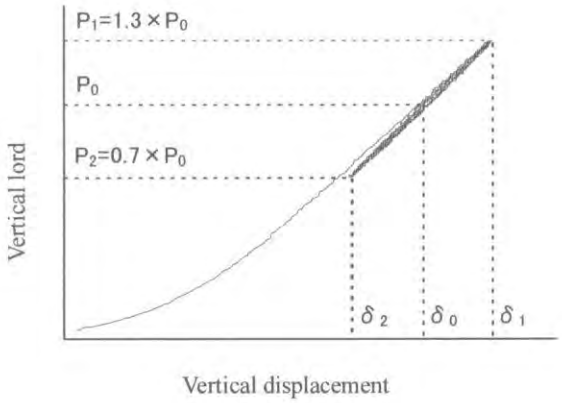

Vertical-spring constant: $\dfrac{P_1 - P_2}{\delta_1 - \delta_2}$

Figure 8.2.2 Calculation method for vertical-spring constant

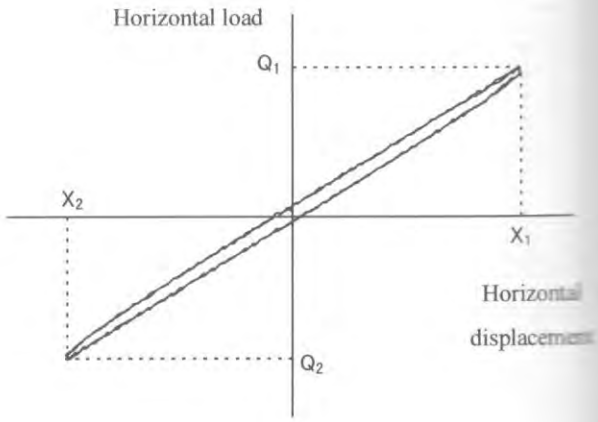

Horizontal-spring constant: $\dfrac{Q_1 - Q_2}{X_1 - X_2}$

Figure 8.2.3 Calculation method for horizontal-spring constant

@seismicisolation

(2) Example of performance test of laminated-rubber bearing with lead plug (O. Company)

For performance test for laminated-rubber bearing with lead plug, CM should confirm that the items are inspected for all devices, using the methods shown in Table 8.2.4.

Table 8.2.4 Items for performance test of laminated-rubber bearing with lead plug

Item	Method
Vertical stiffness (Kv)	After four cycles of loading at ±30% of load amplitude, with vertical load equivalent to standard stress, calculate using the max-displacement point and max-load point, and minimum-displacement point and minimum-load point of the third cycle (Figure 8.2.4).
Stiffness after yielding (Kd)	After four cycles of loading at ±100% of shear strain (γ) with vertical-load equivalent to standard stress, calculate $Kd_{1,2}$ using average of regression lines from $-\delta_2/2$ point to $+\delta_1/2$ point, of the third cycle (Figure 8.2.5).
Intercept load (Qd)	After four cycles of loading at ±100% of shear strain (γ) with vertical-load equivalent to standard stress, calculate $Qd_{1,2}$ using average of regression lines of intercept point from $-\delta_2/2$ point to $+\delta_1/2$ point, of the third cycle (Figure 8.2.5).

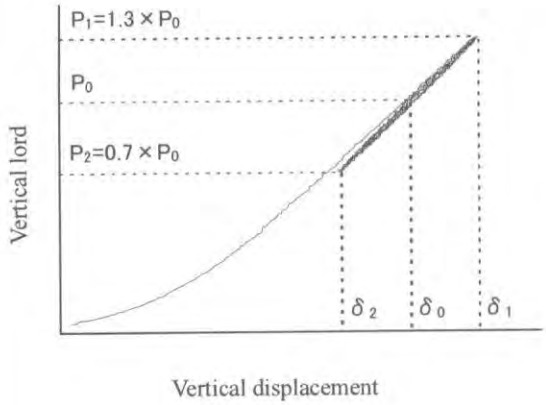

$$Kv = \frac{P_1 - P_2}{\delta_1 - \delta_2}$$

Figure. 8.2.4 Calculation method for vertical stiffness

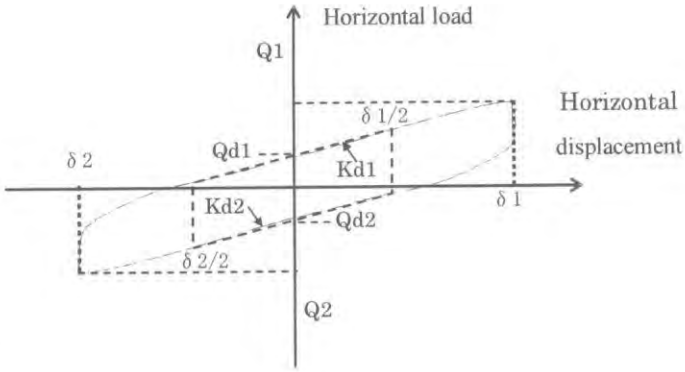

$$K_d = \frac{K_{d1} + K_{d2}}{2} \ , \ Q_d = \frac{|Q_{d1}| + |Q_{d2}|}{2}$$

Figure. 8.2.5 Calculation method of intercept load and for stiffness after yielding

@seismicisolation
@seismicisolation

8.3 Quality control and performance test of sliders

8.3.1 Quality control and performance test of slider with elastomer

Table 8.3.1 Quality control of slider with elastomer

PIC: Person(s) in charge

		Inspection item		Frequency	Criteria	Treatment	PIC	
							MFR	CM
Material test		Physical performance of rubber and sliding material	Hardness	Once for each project	As stated in specifications	Reject and demand new device	D	D
			Tensile stress					
			Tensile strength					
			Elongation					
		Steel-mill sheet		All	As stated in specification	Reject and demand new device	D	D
Visual inspection		Isolators right after production		All	・No scratches ・No corrosion	Remediation	M	C
Dimension test	LRB	Isolator height		All	±3mm	Remediation, or reject and demand new device	M	C
		Inclination of flange			0.5% of flange dia. & 3mm			
		Outer diameter of rubber			±3mm			
		Outer diameter of sliding material			±0.5% & ±4mm			
	Sliding plate	Length of each side		All	-3mm to +5mm			
		Thickness			±2mm			
		Flatness			Less than or equal to 1/500 of length of sliding plate			
		Surface roughness (for plate without coating)			As stated in specifications			
		Thickness of coating (for plate with coating)			As stated in specifications			
		Length of each side of pedestal plate			-3mm to +5mm			
	Bolt	Connecting-bolt hole pitch		All	±1.2mm			
		Diameter of connecting-bolt hole			±0.5mm			
Anti-corrosion method		Membrane thickness		More than 50% for each type	As stated in specifications	Remediation	M	C
Performance Test		Vertical	Vertical stiffness (Kv)	All	±30%	Reject and demand new device	M	C
		Horizontal properties	Horizontal stiffness (Kh)		±20%			
			Friction factor (μ)		±20%			

Note: C: Inspection with CM in attendance M: Inspection by MFR
D: Specified in design documents

@seismicisolation

Table 8.3.2 Method of confirmation of dimensions of slider with elastomer

Inspection items	Measurement method
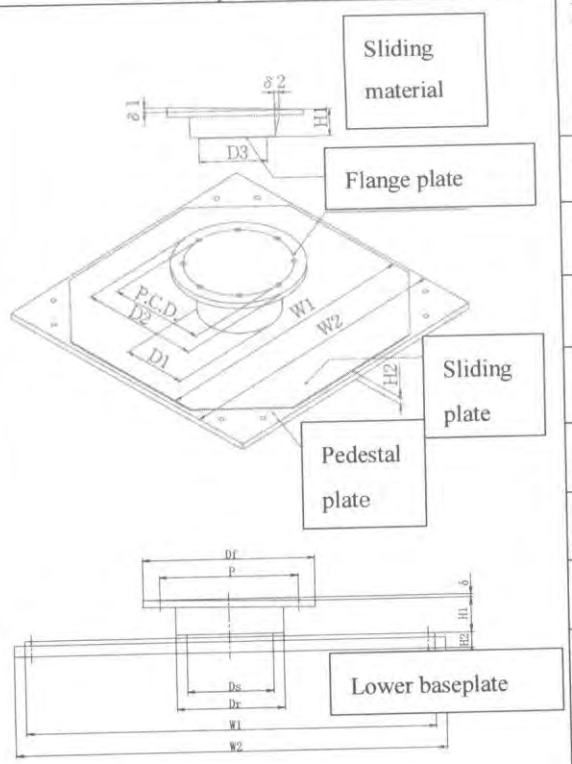	Isolator height: H1 ・Height, including the sliding material ・Measure 4 orthogonal points with caliper. The average value should be modified by temperature compensation.
	Inclination of flange: $\delta 1$ ・Use highest value of 4 orthogonal points.
	Outer diameter of flange: Df ・Measure with tape measure.
	Outer diameter of sliding material: Ds ・Measure with tape measure.
	Outer diameter of rubber: Dr ・Measure inner diameter of metal mold.
	Length of sliding plate: W1 ・Measure two orthogonal points with tape measure.
	Length of each side of pedestal plate: W2 ・Measure two orthogonal points with tape measure.
	Thickness of sliding plate: H2 ・Measure with caliper.
	Flatness of slider ・Measure any gap between surface of sliding plate and straight edge with gap gauge in each direction.
	Roughness of sliding plate (for plate without coating) ・Measure surface of sliding plate with roughness counter.
	Thickness of membrane (for plate with coating) ・Measure with membrane-thickness gauge.
	Connecting-bolt hole pitch: P ・Measure with tape measure. ・Check with template.
	Diameter of connecting bolt ・Measure with caliper.

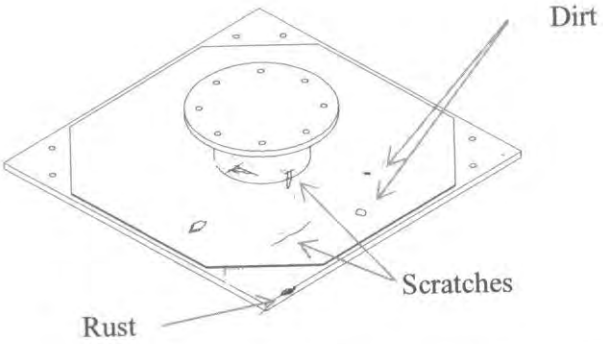

Figure 8.3.1 Image of damage to slider with elastomer

@seismicisolation
@seismicisolation

(1) Example of performance test of sliders with elastomer (O. Company)

For performance test for slider with elastomer, CM should confirm that the items are inspected for all devices, using the methods shown in Table 8.3.3.

Table 8.3.3 Item for performance test of slider with elastomer

Item	Method
Vertical stiffness (Kv)	After four cycles of loading at ±30% of load amplitude, with vertical load equivalent to standard stress, calculate using the max-displacement point and max-load point, and minimum-displacement point and minimum-load point of the third cycle (Figure 8.3.2).
Initial stiffness (K_1)	After four cycles of loading at ±200% of shear deformation, with vertical load equivalent to standard stress, calculate $K_{1l,r}$ using average of inclination at δ_1 point and δ_2 point of hysteretic curve, of the third cycle (Figure 8.3.3).
Friction factor (μ)	After four cycles of loading at ±200% of shear deformation, with vertical load equivalent to standard stress, divide average of intercept load of Q_{d1} and Q_{d2} by value of vertical load (Figure 8.3.3).

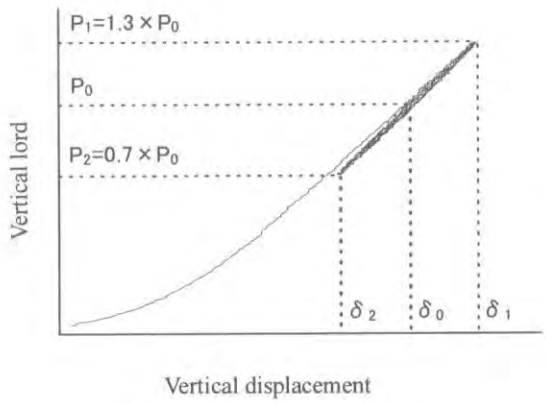

$$Kv = \frac{P_1 - P_2}{\delta_1 - \delta_2}$$

Figure 8.3.2 Calculation method for vertical stiffness

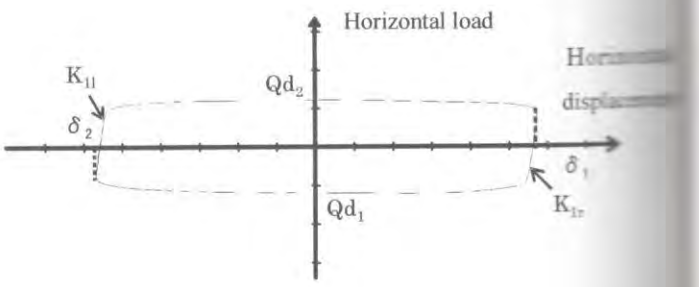

$$K_1 = \frac{K_{1r} + K_{1l}}{2} \quad , \quad \mu = \frac{|Q_{d1}| + |Q_{d2}|}{2P_0}$$

Figure 8.3.3 Calculation method for initial stiffness and friction factor

@seismicisolation

8.3.2 Quality control and performance test of spherical-surface slider

Table 8.3.4 Quality control of spherical-surface slider

PIC: Person(s) in charge

	Inspection item		Frequency	Criteria	Treatment	PIC	
						MFR	CM
Material test	Steel-mill sheet		All	As stated in specifications	Reject and demand new device	D	D
	Sliding material mill sheet	Tensile strength		As stated in specifications	Reject and demand new device	D	D
		Elongation					
		Hardness					
Visual inspection	Isolators right after production	Sliding material	All	・No scratches ・No distortion ・Must be painted	Remediation	M	C
		Sliding plate		・No scratches ・No dust ・No stains ・No corrosion			
Dimension test	Height of isolator		All	±2mm	Remediation, or reject and demand new device	M	C
	Inclination of isolator			Less than or equal to 1/300 of design value			
	Radius of sphere surface			±2mm			
	Length of sphere surface			±3mm			
	Pitch of connecting-bolt hole			Check with template			
Anti-corrosion method	Membrane thickness		More than 50% for each type	As stated in specifications	Remediation	M	C
Performance test	Test of horizontal performance	Horizontal stiffness (K_2)	All	±8%	Remediation, or reject and demand new device	M	C
		Friction factor (μ)		±0.015			

Note: C: Inspection with attendance of CM M: Inspection by MFR.
D: Specified in design documents

@seismicisolation
@seismicisolation

Table 8.3.5 Method of confirmation of dimensions of spherical-surface slider

Inspection item	Measurement method
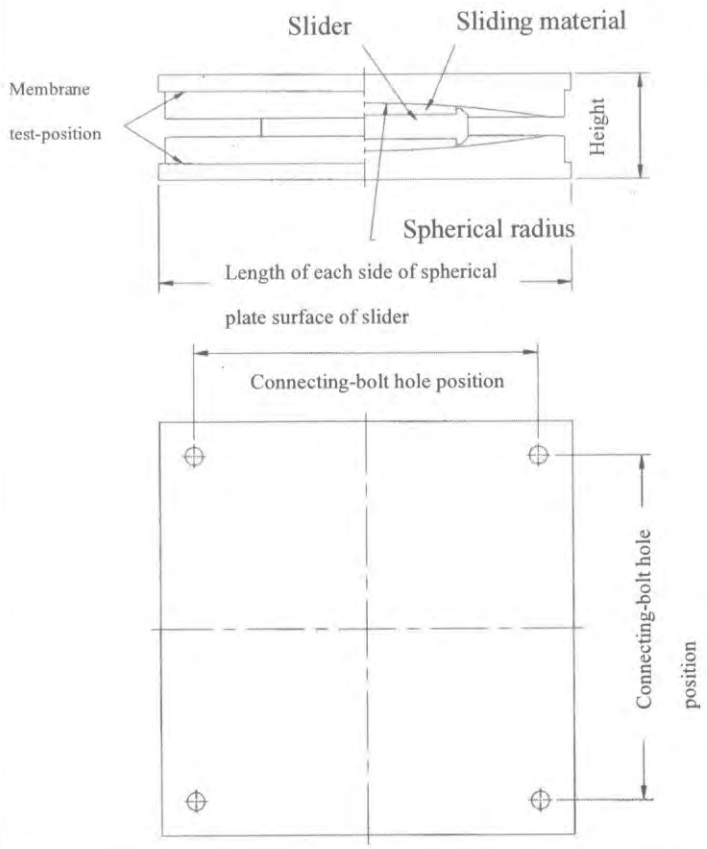	Isolator height: H1 ・Use average value of four points.
	Inclination of isolator ・Use largest value of 4 orthogonal points.
	Radius of spherical surface ・Measure any gap between standard radius-gauge and surface of isolator.
	Length of spherical-surface plate ・Measure with tape measure.
	Connecting-bolt hole pitch ・Check with template. Items to be checked are hole diameters and their positions

@seismicisolation

(1) Example of performance test of spherical-surface slider (O. Company)

For performance test for spherical-surface slider, CM should confirm that the items are inspected for all devices, using the methods shown in Table 8.3.6.

Table 8.3.6 Items for performance test of spherical-surface slider

Item	Method
Secondary stiffness (K_2)	After four cycles of loading at ±200% of shear displacement, with vertical load equivalent to standard stress, calculate $K_{2u,d}$ using average at $-\delta_1/2$ point and $+\delta_2/2$ point of hysteretic curve, of the third cycle (Figure 8.3.4).
Friction factor (μ)	After four cycles of loading at ±200% of shear displacement, with vertical load equivalent to standard stress, divide average of intercept load of $Qd1$ and $Qd2$ by value of vertical load (Figure 8.3.3).

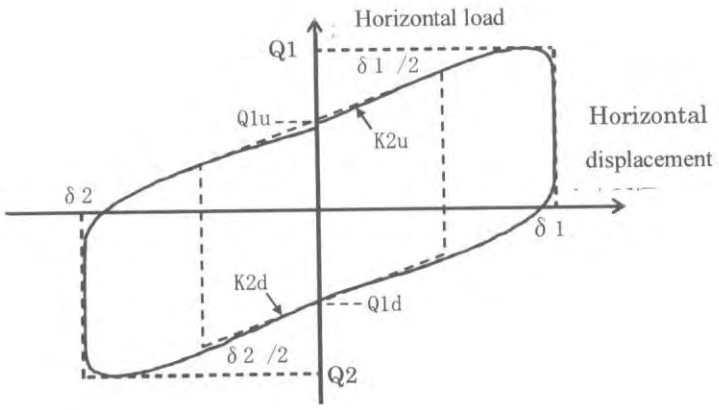

$$K_2 = \frac{K_{2u} + K_{2d}}{2} \qquad \mu = \frac{|Q_{1u}| + |Q_{1d}|}{2P}$$

Figure 8.3.4 Calculation method for secondary stiffness and friction factor

@seismicisolation
@seismicisolation

8.4 Quality control and performance test of dampers

8.4.1 Quality control and performance test of U-shape damper

Table 8.4.1 Quality control of U-shape damper

PIC: Person(s) in charge

	Inspection item	Frequency	Criteria	Treatment	PIC	
					MFR	CM
Material test	Stiffness	Three per mill-sheet and heat treatment	As stated in specifications	Reject and demand new device	M	D
	Intercept point					
	Tensile strength					
	Elongation					
	Steel mill-sheet	All	As stated in specifications		D	D
Visual inspection	Appearance	All	・No scratches ・No dents ・Must be painted	Remediation	M	C
Dimension test	Height of damper	All	±10mm	Reject and demand new device	M	C
	Thickness and width of damper		±1.5mm			
	Length of damper		±12mm			
Anti-corrosion method	Membrane thickness test	More than 50% for each type	More than or equal to designed value	Remediation	M	C
Welding portion test	Appearance	All	No irregularities	Remediation, or reject and demand new device	M	C
	Studs right after welded					
	Hitting test of welded stud	Specified number	No irregularities	Reject and demand new device		
Performance test	Primary stiffness	Sampling test for every two years	±10%	—	M	D
	Intercept load		±10%			
	Performance of ultimate deformation		No break after 5 cycles with max deformation			

Note: C: Inspection with attendance of CM M: Inspection by MFR
D: To be checked with documents

@seismicisolation

Table 8.4.2 Method of confirmation of dimension of U-shaped damper

Items to check dimension	Measurement method and criteria
Thickness and width of damper 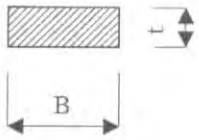	Two points for each damper (Round parts and parallel parts) ・Design value ±1.5mm*1
Height of damper 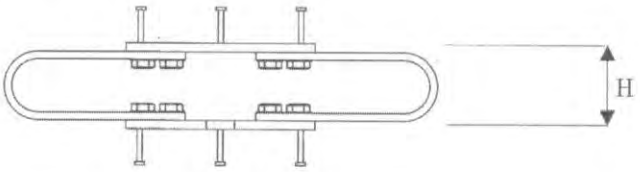	Inside height between two baseplates ・Design value ±10mm
Length of damper 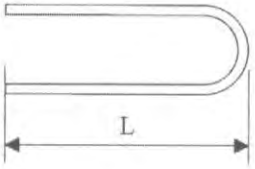	Length of all attached rods ・Design value ±12mm*1

Note:
*1: The criteria vary according to the damper size.

@seismicisolation
@seismicisolation

8.4.2 Quality control and performance test of oil damper

Table 8.4.3 Quality control of oil damper

PIC: Person(s) in charge

	Inspection item	Frequency	Criteria	Treatment	PIC	
					MFR	CM
Material test	Mill-sheet of cylinder	Each delivery	As stated in specifications	Reject and demand new device	D	D
	Mill-sheet of rod					
	Mill-sheet of pin joint					
	Fluid oil					
Visual inspection	Visual inspection	All	·No damage ·No distortion	Remediation	M	C
Dimension test	Stroke	All	As stated in specifications	Remediation	M	C
	Dimension test of damper					
Welding portion test	Penetration test	All	As stated in specifications	Remediation	M	D
Static test	Working	All	Regular work	Remediation	M	C
Pressure test	Leakage of oil	All	No leakage	Remediation	M	C
Performance test	Damping force and velocity	All	Design value ±15%	Remediation	M	C

Note: C: Inspection with CM in attendance M: Inspection by MFR
D: Specified in design documents

(1) Performance test of oil damper

Performance tests of damper are carried out according to manufacturers' inspection directions. For a linear characteristic, three damping-forces are checked. For a bilinear characteristic, one damping-force is measured in the damping coefficient C_1 region and two damping-forces in the damping coefficient C_2 region. Design specifications should be confirmed. An example of damping performance test of bilinear type oil damper is shown in Figure 8.4.1 and 8.4.2.

The test is carried out at three points in linear damper, at one point in C_1 region and two points of C_2 region of dumping factor in bilinear type of damper. Damping force is shown through curve of damping force and displacement of damper with sinusoidal loading. The damping curves of damping force and displacement are shown in Figure 8.4.1 and 8.4.2 under certain velocities, such as 25cm/s, 50cm/s, 100cm/s. It is necessary to set the number of vibration cycles according to the vibration condition and the test function ability.

@seismicisolation

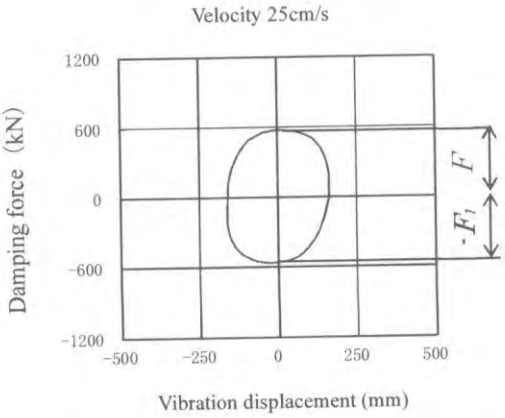

Figure 8.4.1 *F-δ* Curve in C_1 region

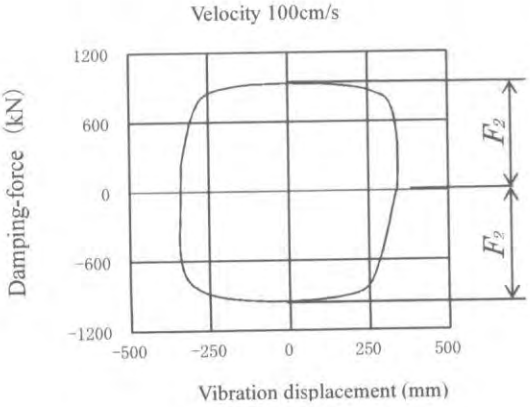

Figure 8.4.2 *F-δ* Curve in C_2 region

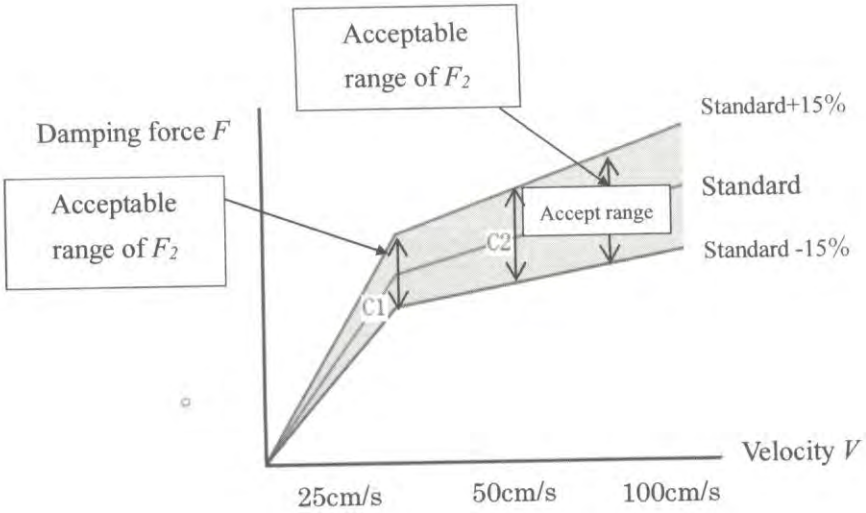

Figure 8.4.3 *F-V*

@seismicisolation
@seismicisolation

8.5 Summary report for SI construction

Profile of SI building (1/2)				
Project name				
Outline of construction	Location			
	Building owner/ requesting party		Design firm	
	Construction company		Period of construction	
	Building area		Usage	
	Total floor area		Building height (meter)	
			Structure	
	Construction work	New	Renovation	
Foundation soil	Ground classification		Water level	
	Type		Depth	
	Improvement			
	Location of SI layer			
	Clearance (mm)	Horizontal:	Vertical:	
Plan and sectional views of SI layer				
SI device	Isolator			
	Damper			
Reporter	Name			
	Role			
	Company name			
	Division			

The Japan Society of Seismic Isolation	No.

@seismicisolation

Profile of SI building (2/2)

Document	Document for SI construction plan		Instructions for production and inspection of SI device	
	Reports for inspections at construction		Test results for pipe joints	
	Reports for inspection at completion			
	Reports for production and inspection of SI devices			

Management of manufacturing of devices

Isolator

Management item		Specification	JSSI	Control value
Inspection of appearance and dimension	Height			
	Inclination			
	Deviation			
Performance test	Vertical stiffness			
	Horizontal stiffness			
	Strain level			

Damper

Management item		Specification	JSSI	Control value
Inspection of appearance and dimension	Height			
	Inclination			
	Deviation			
Performance test	Vertical stiffness			
	Horizontal stiffness			
	Strain level			

Management of temporary works			
	Restraints	Assumed horizontal force	
	Scaffolding	Special consideration	
	Cranes	Special consideration	
	Others		

Management of construction accuracy

Management item		Specification	JSSI	Control value
Base plates for isolators	Horizontal accuracy			
	Position error			
Base plates for dampers	Horizontal accuracy			
	Position error			
Clearance	Horizontal accuracy			
	Vertical accuracy			
Filling method	1. Grouting			
	2. Pouring of concrete			
	3. Filling test			

Inspection at completion

Management item		Control value	Measured value
Position of superstructure			
Isolator	Horizontal displacement		
	Vertical displacement		

Maintenance system	

The Japan Society of Seismic Isolation	No.

@seismicisolation
@seismicisolation