SSC

Staff Selection Commission

# Civil Engineering

## Topicwise Previous Solved Papers

## for Junior Engineer

**Includes :**

| Paper-I | Paper-II |
| --- | --- |
| Objective Solved Questions | Conventional Solved Questions |

Also useful for State Services Examinations and other Competitive Examinations

SSC Civil Engineering • Junior Engineer Previous Solved Papers

# SSC

Staff Selection Commission

# Junior Engineer

## Section-A

## Civil Engineering

*Paper I : Objective Paper*

Topicwise Previous Year Solved Questions

SSC Junior Engineer

Civil Engineering

Paper-I Conventional

# Unit I

# Building Materials

## Contents


| Sl. | Topic | Page No. |
|---|---|---|
| 1. | Bricks, Stones and Timber | 4 |
| 2. | Cement & Lime | 7 |
| 3. | Concrete Technology | 11 |
| 4. | Paints and Miscellaneous | 17 |


OOOO

# 1 Bricks, Stones and Timber

## Bricks, Stones

1.1 Crushing strength of a good building stone should be more than
(a) 50 MPa (b) 100 MPa
(c) 150 MPa (d) 200 MPa
[SSC - JE : 2011]

1.2 King closers are related to
(a) doors and windows
(b) king post truss
(c) queen post truss
(d) brick masonary
[SSC - JE : 2011]

1.3 The water absorption for good brick should not be more than
(a) 10 % of its dry weight
(b) 15% of its dry weight
(c) 10% of its saturated weight
(d) 15% of its saturated weight
[SSC - JE : 2012]

1.4 Clay bricks are made of earth having
(a) Nearly equal proportion of silica and alumina
(b) Nearly equal proportions of alumina silica and lime
(c) 35 – 70% silica and 10 – 20% alumina
(d) 10 – 20% silica and 35 – 70% alumina
[SSC - JE : 2012]

1.5 The most suitable stone for building piers is
(a) Granite (b) Limestone
(c) Marble (d) Sandstone
[SSC : JE : 2013]

1.6 The plasticity to mould bricks in suitable shape is contributed by
(a) Alumina (b) Lime
(c) Magnesia (d) Silica
[SSC : JE : 2013]

1.7 The crushing strength of a first class brick is
(a) 3 N/mm$^2$ (b) 5.5 N/mm$^2$
(c) 10.5 N/mm$^2$ (d) 7.5 N/mm$^2$
[SSC - JE : 2013]

1.8 For polishing mosaic floors we use
(a) Carbolic acid (b) Muriatic acid
(c) Acetic acid (d) Oxalic acid
[SSC - JE : 2013]

1.9 Strength based classification of brick is made on the basis of
(a) IS : 3101 (b) IS : 3102
(c) IS : 3495 (d) IS : 3496
[SSC - JE (Forenoon) : 2014]

1.10 Under heat and pressure, granite can transform into
(a) Quartzite (b) Marble
(c) Slate (d) Gneiss
[SSC - JE (Forenoon) : 2014]

1.11 Quartzite and marble are by nature
(a) volcanic (b) plutonic
(c) sedimentary (d) metamorphic
[SSC - JE (Forenoon) : 2014]

1.12 Basalt stone is by nature :
(a) metamorphic (b) volcanic
(c) plutonic (d) sedimentary
[SSC - JE (Afternoon) : 2014]

1.13 Water absorption of class I brick after 24 hours of immersion in water should not exceed _____of self weight
(a) 25% (b) 18%
(c) 20% (d) 22%
[SSC - JE (Afternoon) : 2014]

1.14 Granite is a rock that is by nature
(a) metamorphic (b) volcanic
(c) plutonic (d) sedimentary
[SSC - JE (Afternoon) : 2014]

## Timbers

1.15 The disease of dry rot in timber is caused by
(a) Complete submergence in water
(b) Alternative wet and dry conditions
(c) Lack of ventilation
(d) None of these
[SSC - JE : 2012]

1.16 The age of trees can be understood by
(a) Measuring the diameter of pitch
(b) The thickness of bark
(c) Counting number of rings
(d) Length of medullary rays
[SSC - JE : 2012]

1.17 Which of the following is the hardest wood?
(a) Babul (b) Chir
(c) Teak (d) Shisham
[SSC - JE : 2012]

1.18 The woodworks should be measured nearest to
(a) 0.001 m (b) 0.002 m
(c) 0.003 m (d) 0.004 m
[SSC - JE : 2013]

■■■■

## Answers Bricks, Stones and Timber

| | | | | | | | | | | | | | | | | | | | |
|---|---|---|---|---|---|---|---|---|---|---|---|---|---|---|---|---|---|---|---|
| 1.1 | (b) | 1.2 | (d) | 1.3 | (b) | 1.4 | (c) | 1.5 | (a) | 1.6 | (a) | 1.7 | (c) | 1.8 | (d) | 1.9 | (b) |
| 1.10 | (d) | 1.11 | (d) | 1.12 | (b) | 1.13 | (c) | 1.14 | (c) | 1.15 | (c) | 1.16 | (c) | 1.17 | (d) | 1.18 | (b) |

## Explanations Bricks, Stones and Timber

1.1 (b)
Qualities of good building stone are:
Crushing strength ≥ 100 N/mm$^2$
Water absorption ≤ 3% by weight
Specific gravity ≥ 2.7

1.3 (b)
As per clause 7.2 of IS 1077 : 1992, water absorption should not be more than 20% by weight up to class 12.5 (crushing strength ≥ 12.5 N/mm$^2$) and 15% by weight for higher class.

1.4 (c)
Composition of good brick earth and their function are:
(i) Alumina: Content of 20% to 30% is necessary. It imparts plasticity to the earth, so it helps in moulding of brick.
(ii) Silica: A good brick earth contains about 50% to 60% of silica. It prevents shrinkage, cracking and warping of raw bricks. It thus imparts uniform shape to the brick. Excess of silica makes the brick brittle.
(iii) Lime: Less than 5% of lime is desirable. It prevents shrinkage of raw bricks.
(iv) Iron Oxide: It helps in fusing of sand and provides red colour to the bricks.

1.5 (a)
Granite — Pier and abutments
Marble — Ornamental work
Sandstone — Ashlar masonry and architectural works
Lime Stone — Architectural work in walls, facade etc.

1.6 (a)
Alumina is the chief constituent of a good brick. A content of about 20% to 30% is necessary to form the brick earth of a good quality. It imparts plasticity to the earth so it helps in the moulding of the brick earth. If alumina is present in excess with inadequate quantity of sand then the raw bricks shrink and warp during drying, and on burning they become too hard.

1.7 (c)
For, first class bricks,
Crushing strength ≥ 10.5 N/mm$^2$
Water absorption ≤ 20%

1.8 (d)
Oxalic powder mixed with water to create dilute oxalic acid solution is used to polish mosaic floors.

1.9 (b)

IS : 3101 – Aluminium collapsible tubes.
IS : 3102 – Classification of burnt clay brick.
IS : 3495 – Method of test of burnt clay brick.
IS : 3496 – Specification for dobby lags and pegs.

1.10 (d)

Gneiss is formed by metamorphosis of granite when subjected to high temperatures and pressures. Gneiss display distinct coarse foliation, representing alternating layers composed of different minerals.

1.11 (d)

Marble and quartzite are both natural metamorphic rocks. However, they were metamorphosed from different sedimentary rocks. Marble was metamorphosed from limestone that was formed in the ocean environment while quartzite came from sandstone formed in the land river environment.

1.12 (b)

Basalt is igneous (volcanic) rock formed from rapid cooling of basaltic lava.

1.13 (c)

The method of determination of water absorption of burnt clay building bricks is covered as per IS : 3495 (Part-II) 1992.

- 1st class brick–Not more than 20% by dry weight.
- 2nd class brick–Not more than 22% by dry weight.
- 3rd class brick–Not more than 25% by dry weight.

1.14 (c)

Granite is a light-coloured plutonic rock found throughout the continental crust, most commonly is mountainous areas.

1.15 (c)

Dry rot is a special form of decay in timber caused by fungus which reduces the wood to powdery condition. Decomposition and putrefaction is accompanied by evolution of gases, mainly hydrogen sulphide and carbon dioxide. Lack of ventilation aides the growth of this fungus.

1.16 (c)

Each year, trees from new cells, arranged in concentric circles called annual growth rings which are used to understand its age.

1.18 (b)

As per clause 2.4 of IS 1200 (part 21) : 1973:

(i) Length and width shall be measured to the nearest 0.01 m.
(ii) Thickness shall be measured to the nearest 2 mm.
(iii) Area should be worked out to the nearest 0.01 $m^2$.
(iv) Cubical contents shall be worked out to the nearest 0.001 $m^3$.

■■■■

# 2 Cement & Lime

2.1 The volume of one bag of cement is
(a) 0.0214 cu.m (b) 0.0347 cu.m
(c) 0.0434 cu.m (d) 0.0609 cu.m
[SSC : JE : 2011]

2.2 Commonly used lime in white washing is
(a) quick lime (b) fat lime
(c) lean lime (d) hydraulic lime
[SSC : JE : 2011]

2.3 Le-chatelier's method can be used to determine
(a) Fineness of cement
(b) Fineness of aggregate
(c) Soundness of cement
(d) Compressive strength of cement
[SSC : JE : 2011]

2.4 The standard consistency test is done in a
(a) Blaine's apparatus
(b) Le-Chatelier's apparatus
(c) Vane apparatus
(d) Vicat's apparatus
[SSC : JE : 2011]

2.5 28 day compressive strength of cement is tested on 70.7 mm size cubes of mortar having cement to sand proportion of
(a) 1 : 5 (b) 1 : 6
(c) 1 : 3 (d) 1 : 4
[SSC - JE : 2012]

2.6 For Portland cement of 43 grade, 28 day mean compressive strength should be
(a) 43 MPa (b) 43.5 MPa
(c) 33 MPa (d) 38.5 MPa
[SSC - JE : 2012]

2.7 Out of the constituents of cement namely, tri calcium silicate ($C_2S$), dicalcium silicate ($C_2S$), tricalcium aluminate ($C_3A$) and tertracalcium aluminoferrite ($C_4AF$), the first one to set and harden is
(a) $C_3A$ (b) $C_4AF$
(c) $C_3S$ (d) $C_2S$
[SSC - JE : 2012]

2.8 The compound first to settle in cement is
(a) Tricalcium silicate
(b) Tetra calcium aluminoferrite
(c) Tricalcium aluminate
(d) Dicalcium silicate
[SSC - JE : 2012]

2.9 Which of the following Bogue's compounds of cement liberates maximum heat of hydration?
(a) $C_3S$ (b) $C_4AF$
(c) $C_3A$ (d) $C_2S$
[SSC - JE : 2012]

2.10 The amount of water used in performing setting time test of cement is (assuming $p$ = standard consistency of cement)
(a) 0.60 p (b) 0.65 p
(c) 0.80 p (d) 0.85 p
[SSC : JE : 2013]

2.11 Gypsum used in cement manufacturing acts as
(a) accelerator (b) air entraining agent
(c) plasticizer (d) retarder
[SSC : JE : 2013]

2.12 Which of the following cement is suitable for use in urgent repairs of existing massive concrete structures such as large dams?
(a) Ordinary portland cement
(b) Low heat cement
(c) Rapid hardening cement
(d) Sulphate resisting cement
[SSC : JE : 2013]

2.13 You are asked to construct a massive concrete dam. The type of cement you will use is
(a) Ordinary portland cement
(b) Rapid hardening portland cement

(c) Low heat cement
(d) Blast furnace slag cement
[SSC : JE : 2013]

**2.14** The object of curing is **not** to
(a) prevent the loss of water by evaporation
(b) reduce the shrinkage of cement concrete
(c) preserve the properties of concrete
(d) reduce the strength of concrete
[SSC : JE : 2013]

**2.15** The initial setting time of Ordinary Portland Cement (OPC) is
(a) 10 min. (b) 45 min.
(c) 30 min. (d) 60 min.
[SSC : JE : 2013]

**2.16** During the manufacture of Portland cement, gypsum or Plaster of Paris is added to
(a) increase the strength of cement
(b) modify the colour of cement
(c) reduce heat of hydration of cement
(d) adjust setting time of cement
[SSC : JE : 2013]

**2.17** Which of the following is added for quick setting of cement?
(a) Gypsum (b) Alum
(c) Zinc sulphate (d) Aluminium sulphate
[SSC : JE : 2013]

**2.18** Which of the following types of lime is used for plastering and white washing?
(a) Quick lime (b) Slaked lime
(c) Hydraulic lime (d) Fat lime
[SSC - JE (Forenoon) : 2014]

**2.19** The density of cement is taken as
(a) 1000 kg/m$^3$ (b) 1250 kg/m$^3$
(c) 1440 kg/m$^3$ (d) 1800 kg/m$^3$
[SSC - JE (Forenoon) : 2014]

**2.20** The high early strength of rapid hardening cement is due to its
(a) increased content of gypsum
(b) burning at high temperature
(c) increased content of cement
(d) higher content of tricalcium silicate
[SSC - JE (Forenoon) : 2014]

**2.21** Di-calcium silicate ($C_2S$)
(a) hydrates rapidly
(b) generates less heat of hydration
(c) hardens rapidly
(d) has less resistance to sulphate attack
[SSC - JE (Forenoon) : 2014]

**2.22** The fineness of cement can be found out by sieve analysis using IS sieve number
(a) 20 (b) 10
(c) 9 (d) 6
[SSC - JE (Forenoon) : 2014]

**2.23** As the cement sets and hardens, it generates heat. This is called as
(a) heat of hydration
(b) latent heat
(c) heat of vaporization
(d) sensible heat
[SSC - JE (Forenoon) : 2014]

**2.24** Which of the following type of lime is used for underwater constructions?
(a) Fat lime (b) Quick lime
(c) Slaked lime (d) Hydraulic lime
[SSC - JE (Afternoon) : 2014]

**2.25** As a cheap alternative, the fineness of cement is tested by using
(a) IS 100 μ sieve where at least 90% (by weight) should be retained.
(b) IS 90μ sieve where at least 90% (by weight) should pass.
(c) IS 90μ sieve where at least 95% (be weight) should pass.
(d) IS 100μ sieve where at least 95% (by weight) should pass.
[SSC - JE (Afternoon) : 2014]

**2.26** To construct a massive dam the type of cement used is :
(a) blast furnace slag cement
(b) low heat cement
(c) rapid hardening cement
(d) ordinary portland cement
[SSC - JE (Afternoon) : 2014]

**2.27** Most important constituents of cement are :
(a) $C_3A$ and $C_2S$ (b) $C_3S$ and $C_3A$
(c) $C_3S$ and $C_2S$ (d) $C_3A$ and $C_3AF$
[SSC - JE (Afternoon) : 2014]

**2.28** Weight of one bag of cement is :
(a) 70 kg (b) 50 kg
(c) 60 kg (d) 65 kg
[SSC - JE (Afternoon) : 2014]

2.29 Fineness test of cement gives us an estimate of
(a) workability of concrete
(b) heat of hydration
(c) rate of hydration
(d) durability of concrete
[SSC - JE (Afternoon) : 2014]

■■■■

## Answers Cement & Lime

| | | | | | | | | | | | | | | | | | |
|---|---|---|---|---|---|---|---|---|---|---|---|---|---|---|---|---|---|
| 2.1 | (b) | 2.2 | (b) | 2.3 | (c) | 2.4 | (d) | 2.5 | (c) | 2.6 | (a) | 2.7 | (a) | 2.8 | (c) | 2.9 | (a) |
| 2.10 | (d) | 2.11 | (d) | 2.12 | (c) | 2.13 | (c) | 2.14 | (d) | 2.15 | (c) | 2.16 | (d) | 2.17 | (d) | 2.18 | (d) |
| 2.19 | (c) | 2.20 | (d) | 2.21 | (b) | 2.22 | (c) | 2.23 | (a) | 2.24 | (d) | 2.25 | (b) | 2.26 | (b) | 2.27 | (c) |
| 2.28 | (b) | 2.29 | (c) | | | | | | | | | | | | | | |

## Explanations Cement & Lime

**2.1 (b)**

1 $m^3$ of cement weights 1440 kg.
But, 1 bag of cement contains 50 kg of cement
Thus, volume of 1 bag of cement

$$= \frac{1}{1440} \times 50 = 0.0347 \text{ m}^3$$

**2.3 (c)**

Le-Chatelier's method is used to check soundness of cement due to the presence of unburnt lime.

**2.4 (d)**

Vicat's apparatus is used to determine standard consistency, initial setting time and final setting time of cement.

**2.5 (c)**

Material required for preparing each cube is:
Cement = 200 g
Sand = 600 g

$$\text{Water} = \left(\frac{P}{4} + 3\right)\%$$

$P$ is percentage of water required for standard consistency.

**2.8 (c)**

Tricalcium aluminate liberates a lot of heat during the early stages of hydration, but has little strength contribution It is the first constituent to settle. To prevent first setting, Gypsum is added which slows down the hydration rate of $C_3A$.

**2.9 (a)**

After few hours of adding water to cement, the tricalcium silicate in the cement starts to react, forming calcium silicate hydrate and calcium hydroxide. This corresponds to the main period of hydration, during which time concrete strengths increase.

**2.10 (d)**

According to clause 5.1 of IS : 4031 (Part 5) 1988, the cement paste is prepared by gauging the cement with 0.85 times the water required to give a paste of standard consistency.

**2.11 (d)**

Gypsum is added to prevent flash setting of cement.

**2.12 (c)**

The high early strength is achieved by a higher fineness (minimum 325 $m^2$/kg) and higher Tricalcium silicate content (upto 70%). This cement is typically used in early prestressing and urgent repairs.

- Ordinary Portland cement–General construction
- Low heat cement–Large gravity dams
- Sulphate resisting cement–Marine structures subjected to sulphate attacks.

**2.13 (c)**

Low heat cement should be used to prevent development of cracks.

**2.14 (d)**

Following are objectives of curing:

- To ensure degree of hydration is sufficient to reduce the porosity to a level such that the desired properties of concrete can be attained.
- To prevent (or replenish) the loss of moisture from concrete.
- To maintain a favourable concrete temperature for a definite period of time.
- To reduce the shrinkage of concrete.
- To prevent loss by evaporation.

**2.15 (c)**

According to Table 3 of IS 269 : 1989 (Ordinary Portland cement, 33 grade - Speciciation)
Initial setting time (Min.) – 30 minutes
Final setting time (Max.) – 600 minutes

**2.16 (d)**

Gypsum plays a very important role in controlling the rate of hardening of the cement. Gypsum is added to prevent flash setting of cement. If not added, the cement will set immediately after mixing of water leaving no time for concrete placing.

**2.17 (d)**

Common accelerator used to decrease the setting time of cement are calcium nitrate, sodium nitrate, calcium chloride, aluminium sulphate etc.

**2.20 (d)**

$C_3S$ — Early strength and generates more heat
$C_2S$ — Hydrates slowly and is responsible for late strength gain.

**2.22 (d)**

IS 4031 (Part-1) - 1996 covers the procedure for determining the fineness of cement by dry sieving as represented by mass of residue left on a standard 90μ is sieve.

**2.24 (d)**

Hydraulic lime provides a faster initial set and higher compressive strength than air lime and eminently hydraulic lime will set in more extreme conditions including under water constructions.

**2.26 (b)**

Dams are prone to thermal and shrinkage cracks due to high heat of hydration entrapped within the structure. Thus low heat cement is used which is manufactured by reducing tricalcium silicate and tricalcium aluminate.

**2.29 (c)**

Finer is the cement, greater area is available for hydration.

■■■■

# 3 Concrete Technology

**3.1** For one cubic metre of concrete (1 : 2 : 4), the number of cement bags required is
(a) 4.5 (b) 5.0
(c) 5.3 (d) 6.3
**[SSC : JE : 2011]**

**3.2** Grading of aggregate in a concrete mix is necessary to achieve
(a) adequate workability
(b) higher density
(c) reduction of voids
(d) better durability
**[SSC : JE : 2011]**

**3.3** The purpose of concrete compaction is to
(a) increase the density
(b) increase the weight
(c) increase the voids
(d) decrease the setting time
**[SSC : JE : 2011]**

**3.4** The test strength of the sample is taken as the average of the strength of
(a) 2 specimens (b) 3 specimens
(c) 4 specimens (d) 5 specimens
**[SSC : JE : 2011]**

**3.5** The static modulus of elasticity ($E_c$) of concrete for short term loading may be derived as
(a) $E_c = 4800\sqrt{f_{ck}}$ (b) $E_c = 5000\sqrt{f_{ck}}$
(c) $E_c = 5200\sqrt{f_{ck}}$ (d) $E_c = 5500\sqrt{f_{ck}}$
**[SSC : JE : 2011]**

**3.6** Minimum grade of concrete for moderate environmental exposure condition should be
(a) M 25 (b) M 30
(c) M 15 (d) M 20
**[SSC - JE : 2012]**

**3.7** Workability of concrete is directly proportional to
(a) Grading of aggregate
(b) Water : Cement ratio
(c) Aggregate : Cement ratio
(d) Time of transit
**[SSC - JE : 2012]**

**3.8** The bottom diameter, top diameter and the height of the steel mould used for slump test are respectively
(a) 20 cm, 30 cm and 10 cm
(b) 10 cm, 30 cm and 20 cm
(c) 20 cm, 10 cm and 30 cm
(d) 10 cm, 20 cm and 30 cm
**[SSC - JE : 2012]**

**3.9** The addition of $CaCl_2$ in concrete results in
(a) increased shrinkage
(b) decreased setting time
(c) decreased shrinkage
(d) increased setting time
**[SSC - JE : 2012]**

**3.10** The concrete mix design is achieved as per
(a) IS : 10262 (b) IS : 13920
(c) IS : 383 (d) IS : 456
**[SSC - JE : 2012]**

**3.11** As per IS : 456 - 2000, the organic content of water used for making concrete should NOT be more than
(a) 200 mg/*l* (b) 250 mg/*l*
(c) 100 mg/*l* (d) 150 mg/*l*
**[SSC - JE : 2012]**

**3.12** The grade of concrete M20 means that characteristic compressive strength of 15 cm cubes after 28 days is not less than
(a) 10 N/mm$^2$ (b) 15 N/mm$^2$
(c) 20 N/mm$^2$ (d) 25 N/mm$^2$
**[SSC : JE : 2013]**

**3.13** Maximum admissible water-cement ratio for mild environmental exposure should be
(a) 0.55 (b) 0.50
(c) 0.45 (d) 0.40
**[SSC : JE : 2013]**

**3.14** Air entrainment in the concrete increases
(a) workability
(b) strength
(c) the effect of temperature variation
(d) the unit weight
**[SSC : JE : 2013]**

**3.15** Which of the following acts as retarder for the concrete?
(a) Calcium chloride
(b) Calcium lignosulphonate
(c) Aluminium powder
(d) None of these
**[SSC - JE (Forenoon) : 2014]**

**3.16** Identify the wrong statement.
(a) Bulking of sand can go up to 40%
(b) Bulking of sand is maximum at 4.6% moisture content
(c) Bulking of sand is considered in weigh batching of concrete mix
(d) Bulking of sand occurs due to free moisture film formation over sand grain
**[SSC - JE (Forenoon) : 2014]**

**3.17** Coarse sand has a fineness modulus in the range of
(a) 2.2 – 2.4 (b) 2.4 – 2.6
(c) 2.6 – 2.9 (d) 2.9 – 3.2
[SSC - JE (Forenoon) : 2014]

**3.18** The top diameter, bottom diameter and the height of the steel mould used for slump test are
(a) 10 cm, 20 cm, 30 cm
(b) 10 cm, 30 cm, 20 cm
(c) 20 cm, 10 cm, 30 cm
(d) 20 cm, 30 cm, 10 cm
[SSC - JE (Forenoon) : 2014]

**3.19** Separation of coarse aggregates from concrete during transportation, is known as
(a) bleeding (b) creeping
(c) segregation (d) evaporation
[SSC - JE (Forenoon) : 2014]

**3.20** Water-cement ratio is the meausre of water and cement used per cubic meter of concrete
(a) volume by volume
(b) weight by weight
(c) weight by volume
(d) volume by weight
**[SSC - JE (Forenoon) : 2014]**

**3.21** To prevent segregation, the maximum height for placing concrete, is
(a) 100 cm (b) 125 cm
(c) 150 cm (d) 200 cm
**[SSC - JE (Forenoon) : 2014]**

**3.22** For batching 1 : 2 : 4 concrete mix by volume, the ingredients required per bag (50 kg) of cement are
(a) 100 litres of fine aggregate; 140 litres coarse aggregate
(b) 100 kg of fine aggregate; 200 kg of coarse aggregate
(c) 70 kg of fine aggregate; 140 kg of coarse aggregate
(d) 70 litres of fine aggregate; 140 litres of coarse aggregate
**[SSC - JE (Forenoon) : 2014]**

**3.23** Bulking is
(a) increase in volume of sand due to moisture which keeps sand particles apart.
(b) increase in density of sand due to impurities like clay, organic matter.
(c) ramming of sand so that it occupies minimum volume.
(d) compacting of sand.
[SSC - JE (Forenoon) : 2014]

**3.24** The concrete cubes are prepared, cured and tested according to Indian Standard code:
(a) IS : 515 (b) IS : 516
(c) IS : 517 (d) IS : 518
[SSC - JE (Forenoon) : 2014]

**3.25** Workability of concrete for a given water content is good if the aggregates are
(a) angular aggregates
(b) flaky aggregates
(c) rounded aggregates
(d) irregular aggregates
[SSC - JE (Forenoon) : 2014]

**3.26** Generally, strength of concrete is considered negligible/very low in
(a) Compression (b) Tension
(c) Fatigue (d) None of the above
**[SSC - JE (Forenoon) : 2014]**

**3.27** In concrete, while hand mixing is adopted, excess cement to be added is
(a) 4% (b) 10%
(c) 14% (d) 20%
**[SSC - JE (Forenoon) : 2014]**

**3.28** To obtain very high strength concrete, it is necessary to use very fine grained
(a) Volcanic Scoria
(b) Granite
(c) Magnetite
(d) Barite
**[SSC - JE (Afternoon) : 2014]**

**3.29** The concrete having a slump of 6.6 cm, is said to be:
(a) plastic (b) dry
(c) earthmoist (d) semi-plastic
**[SSC - JE (Afternoon) : 2014]**

**3.30** Calcium chloride added in concrete acts as:
(a) retarder
(b) accelerator
(c) air entraining agent
(d) plasticizer
**[SSC - JE (Afternoon) : 2014]**

**3.31** The increase in the strength of concrete with time is:
(a) linear (b) non-linear
(c) asymptotic (d) all of the above
[SSC - JE (Afternoon) : 2014]

3.32 Workability of concrete is directly proportional to :
(i) time of transit
(ii) wate cement ratio
(iii) grading of aggregate
(iv) strength of aggregate
(v) aggregate cement ratio
(a) (iii), (iv), (v) (b) (i), (ii), (iv)
(c) (ii), (iii), (v) (d) (ii), (iii)
[SSC - JE (Afternoon) : 2014]

3.33 The percentage of the aggregate of fineness modulus 2.6 to be combined with coarse aggregate of fineness modulus 6.8 for obtaining the aggregate of fineness modulus 5.4, is
(a) 60% (b) 30%
(c) 40% (d) 50%
**[SSC - JE (Afternoon) : 2014]**

**3.34** Generally the ratio of different ingredients (cement, sand and aggregate) in concrete mix of grade M20 is
(a) 1 : 2 : 4 (b) 1 : 1.5 : 3
(c) 1 : 3 : 6 (d) 1 : 1 : 2
**[SSC - JE (Afternoon) : 2014]**

**3.35** Admixture which causes early setting and hardening of concrete is called as
(a) Air entraining agent
(b) Workability admixture
(c) Accelerator
(d) Retarder
**[SSC - JE (Afternoon) : 2014]**

**3.36** To prevent sulphate attack in concrete, for preparing concrete mix, water pH must be within
(a) 7 – 10 (b) 4 – 6
(c) 5 – 7 (d) 6 – 9
**[SSC - JE (Afternoon) : 2014]**

**3.37** For a given aggregate ratio, increasing the water cement ratio:
(a) increases the strength
(b) decreases shrinkage
(c) increases shrinkage
(d) does not cause any change in shrinkage
**[SSC - JE (Afternoon) : 2014]**

3.38 Separation of water, sand and cement from a freshly mixed concrete is known as:
(a) Segregation (b) Flooding
(c) Bleeding (d) Creeping
[SSC - JE (Afternoon) : 2014]

3.39 The permanent deformation of concrete with time under steady load is called
(a) visco-elasticity (b) vicidity
(c) creep (d) relaxation
[SSC - JE (Afternoon) : 2014]

3.40 An aggregate is known as cyclopean aggregate if its size is more than:
(a) 75 mm (b) 4.75 mm
(c) 30 mm (d) 60 mm
[SSC - JE (Afternoon) : 2014]

**3.41** Segregation in the concrete occurs when:
(a) Cement gets separated from mixture due to excess water
(b) Cement fails to give adequate binding quality
(c) Water is driven out fo concrete at a faster rate
(d) Coarse aggregates try to separate out from the finer material

**[SSC - JE (Afternoon) : 2014]**

## Answers Concrete Technology

| | | | | | | | | | | | | | | | | | |
|---|---|---|---|---|---|---|---|---|---|---|---|---|---|---|---|---|---|
| 3.1 | (d) | 3.2 | (c) | 3.3 | (a) | 3.4 | (b) | 3.5 | (b) | 3.6 | (a) | 3.7 | (a) | 3.8 | (c) | 3.9 | (b) |
| 3.10 | (a) | 3.11 | (a) | 3.12 | (c) | 3.13 | (a) | 3.14 | (a) | 3.15 | (b) | 3.16 | (c) | 3.17 | (d) | 3.18 | (a) |
| 3.19 | (c) | 3.20 | (b) | 3.21 | (c) | 3.22 | (d) | 3.23 | (a) | 3.24 | (b) | 3.25 | (c) | 3.26 | (b) | 3.27 | (b) |
| 3.28 | (b) | 3.29 | (a) | 3.30 | (b) | 3.31 | (b) | 3.32 | (d) | 3.33 | (d) | 3.34 | (a) | 3.35 | (c) | 3.36 | (d) |
| 3.37 | (c) | 3.38 | (c) | 3.39 | (c) | 3.40 | (a) | 3.41 | (d) | | | | | | | | |

## Explanations Concrete Technology

**3.1 (d)**

1 $m^3$ of wet concrete with 1 part cement,
2 parts fine aggregate,
4 parts coarse aggregate.
Volume of dry concrete = 1.52 $m^3$

$$\text{Quantity of cement} = 1\times\left(\frac{1.52}{1+2+4}\right) = 0.217\ m^3$$

Density of cement = 1440 kg/$m^3$
So quantity in kg = 0.217 × 1440 = 312.48 kg
1 bag of cement = –50 kg

$$\text{No. of bags} = \frac{312.48}{50} = 6.3 \text{ bags}$$

**3.2 (c)**

Particle size distribution of aggregates is termed as grading of aggregate. Ideally aggregates are graded in a way to minimize voids. This in turn leads to higher density, adequate workability and better durability.

**3.3 (a)**

During mixing, transporting and placing air gets entrapped. Quantity of entrapped air is inversely proportional to workability and also affects strength and quality of concrete. Compaction is done to drive out entrapped air so that fresh concrete is densified.

**3.4 (b)**

According to caluse 5.4 of code IS 516 : 1959 (Methods of tests for strenth of concrete), at least three specimens, preferably from different batches, shall be made for testing at each selected stage.

**3.6 (a)**

As per table 5 of code IS 456 : 2000 (for reinforced concrete)

| Exposure condition | Min. cement content (kg) | Max. free water cement ratio | Min. grade of cement |
|---|---|---|---|
| Mild | 300 | 0.55 | M20 |
| Moderate | 300 | 0.50 | M25 |
| Severe | 320 | 0.45 | M30 |
| Very severe | 340 | 0.45 | M35 |
| Extreme | 360 | 0.40 | M40 |

**3.7 (a)**

Well graded aggregates have all sizes in required percentages. This helps in reducing the voids in a given volume of aggregates. The less volume of voids makes the cement paste available for aggregate surfaces to provide better lubricating to the aggregates.

**3.8 (c)**

As per IS 7320 : 1974, internal dimension of mould used for slump test are:

(i) Bottom diameter = 200 mm
(ii) Top diameter = 100 mm
(iii) Height = 300 mm

**3.9 (b)**

$CaCl_2$ is an accelerator.

**3.11 (a)**

Permissible limits for solids as per Table 1 of IS 456 : 2000.

| Types of solids | Tested as per | Permissible limit (Max.) |
|---|---|---|
| Organic | IS 3025 (part 18) | 200 mg/*l* |
| Inorganic | IS 3025 (part 18) | 3000 mg/*l* |
| Sulphates | IS 3025 (part 24) | 400 mg/*l* |
| Chlorides | IS 3025 (part 32) | 2000 mg/*l* |
| Suspended Matter | IS 3025 (part 17) | 2000 mg/*l* |

**3.13 (a)**

As per Table 5 of code IS 456 : 2000.

**3.14 (a)**

Air entrainment increases workability but decreases strength.

**3.15 (b)**

Example of retarder are:
Gypsum, sugar, calcium lignosulfonate etc.

**3.17 (d)**

| Type of sand | Fineness modulus |
|---|---|
| Fine | 2.2-2.6 |
| medium | 2.6-2.9 |
| Coarse | 2.9-3.2 |

**3.20 (b)**

The water cement ratio is the ratio of the weight of water to the weight of cement used in a concrete mix. Increase in water content ration decreases the strength of concrete.

**3.21 (c)**

As per clause 13.2 of IS 456 : 2000, the maximum permissible free fall of concrete should be 1.5 m.

**3.22 (d)**

70 litres of fine aggregate
140 litres of coarse aggregate
In 1 : 2 : 4 mix, cement = 1
Fine aggregate = 2
Coarse aggregate = 4
Total proportion = 1 + 2 + 4 = 7

After adding water to the dry mix, the gross volume of concrete reduces from the sum of individudal volume of cement, aggregate and sand. So the compensate the effect of shrinkage, for calculating 1 cubic metre of concrete, thumb rule says that we have to increase the dry volume of concrete by about 50-55%
So for 1 cubic metre of concrete we have to take 1.53 cubic metre of dry volume combined.

$$\text{Quantity of cement} = \frac{1.53}{7} = 0.2186 \text{ cumn}$$

Unit weight of cement = 1440 kg/cum
Total cement required = 0.2186 × 1440
= 314.78 kgs
Coarse aggregate = 0.2186 × 4 = 0.8744 cum
One bag of cement = 50 kg
So fine aggregate per bag (50 kg) of cement

$$= \frac{0.4372 \times 10^3}{314.78/50} = 69.5 \text{ litres}$$

Coarse aggregate per bag (50 kg) of cement

$$= \frac{0.8744 \times 10^3}{314.78/50} = 139 \text{ litres}$$

**3.25 (c)**

Rounded aggregates have better workability than angular aggregate. However angular aggregates have better bond characteristics and requires more cement paste to produce workable mixture.

**3.27 (b)**

According to clause 2.6 of code IS 516 : 1959 the concrete shall be mixed by hand, or preferably, in a laboratory batch mixer, in such a manner as to avoid loss of water or other materials. Each batch of concrete shall be of such a size as to leave about 10 percent excess after moulding the desired number of test specimens.

**3.28 (b)**

Coarse aggregates as obtained by crushing various types of granites (such as syenites, dolerites, diorites, quartzites etc.), schist, gneiss, crystalline hard lime stone and good quality sand stones. When very high strength concrete is required, a very fine-grained granite is the best aggregate.

3.29 (a)

- **Non-plastic concrete:** When slump is less than 15 mm.
- **Non-cohesive concrete:** When slump is greater than 230 mm.

3.31 (b)

Rate of increase of strength of concrete decreases with increase in time.

3.33 (d)

$$\text{Required } \% = \frac{6.8-5.4}{5.4-2.6} \times 100 = 50\%$$

3.34 (a)

Refer table 9 of IS 456 : 2000.

3.37 (c)

As water cement ratio increases shrinkage increases.

■■■■

# 4 Paints and Miscellaneous

**4.1** Putty is made up of
(a) Red lead and linseed oil
(b) Zinc oxide and boiled linseed oil
(c) White lead and turpentine
(d) Powdered chalk and raw linseed oil
**[SSC - JE : 2012]**

**4.2** Doglegged stairs are-
(a) Quarter turn stairs
(b) Three quarter turn stairs
(c) Half turn stairs
(d) Straight stairs
**[SSC - JE : 2012]**

**4.3** The base material for distemper is
(a) Chalk (b) Lime
(c) Clay (d) Lime putty
**[SSC : JE : 2013]**

**4.4** The lintels are preferred to arches because
(a) arches require more headroom to span the openings like doors, windows, etc.
(b) arches require strong abutments to withstand arch thrust.
(c) arches are difficult to construct.
(d) All of the above
**[SSC : JE : 2013]**

**4.5** Mild steel used in RCC structures conforms to
(a) IS : 432 (b) IS : 1566
(c) IS : 1786 (d) IS : 2062
**[SSC - JE (Forenoon) : 2014]**

**4.6** In paints, methylated spirit, naphtha and turpentine are used as
(a) Base (b) Binder
(c) Solvent (d) Extender
**[SSC - JE (Forenoon) : 2014]**

**4.7** Aluminium is anodized to protect it from weathering effect by forming surface coat of
(a) Aluminium carbide
(b) Aluminium barate
(c) Aluminium oxide
(d) Red lead
**[SSC - JE (Forenoon) : 2014]**

**4.8** A very comfortable type of stair for usage is
(a) straight (b) dog legged
(c) open newel (d) circular
**[SSC - JE (Forenoon) : 2014]**

**4.9** Which of the following has least carbon content?
(a) Wrought iron (b) Cast iron
(c) Mild steel (d) Pig iron
**[SSC - JE (Afternoon) : 2014]**

**4.10** Steel corrodes in exposure of air and moisture and forms rust which has :
(a) 2.5 times the volume of steel
(b) 0.5 times the volume of steel
(c) equal volume compared to amount of steel rusted
(d) twice the volume of steel
**[SSC - JE (Afternoon) : 2014]**

**4.11** Zinc oxide is a pigment having _____colour.
(a) blue (b) white
(c) yellow (d) red
**[SSC - JE (Afternoon) : 2014]**

■■■■

## Answers Paints and Miscellaneous

4.1 (d) 4.2 (c) 4.3 (a) 4.4 (d) 4.5 (a) 4.6 (c) 4.7 (c) 4.8 (c) 4.9 (a)

4.10 (a) 4.11 (b)

## Explanations Paints and Miscellaneous

**4.1 (d)**

Putty is traditionally made by mixing a base of whiting (finally powdered chalk)) with linseed oil in various proportions.

**4.2 (c)**

Dog legged stairs have 180° turn in the walk line.

**4.7 (c)**

Benefits of anodizing are:

(i) It allows coloring
(ii) Improved lubrication
(iii) Improved adhesion
(iv) Increased resistance to corrosion and wear.

**4.9 (a)**

| Material | Carbon content |
|---|---|
| Wrought iron | 0.02% to 0.03% |
| Cast iron | 2% to 3% |
| Mild steel | 0.1% to 0.3% |
| Pig iron | 3% to 4% |

**4.10 (a)**

This causes the concrete to be stressed in tension and results in the concrete breaking away from the steel. The corrosion weakens the steel, but also, as the concrete cracks it breaks the bond between the steel and the concrete, hence seriously reducing the load capacity of the reinforced concrete. As the corrosion process continues the concrete will break away from the structure exposing more steel to the corrosive environment and weakening the structure.

■■■■

SSC

Junior Engineer

Civil Engineering

Paper-I : Objective

# Unit II

# Estimating, Costing and Valuation

## Contents


| Sl. | Topic | Page No. |
|---|---|---|
| 1. | Estimates | 20 |
| 2. | Rate Analysis, Valuation and Miscellaneous | 24 |


OOOO

# 1 Estimates

**1.1** If $d$ is the constant distance between the sections, then the correct prismoidal formula for volume is

(a) $\frac{d}{3}$ [first area + last area + 4 Σ even area + 2Σ odd areas]

(b) $\frac{d}{6}$ [first area + last area + 2 Σ Even area + 4Σ odd areas]

(c) d[first area + last area + Σ Even area + 2Σ odd areas]

(d) $\frac{d}{3}$ [first area + last area + 2 Σ Even area + 4Σ odd areas]

[SSC - JE : 2012]

**1.2** The cross-section of a strip footing is shown below :

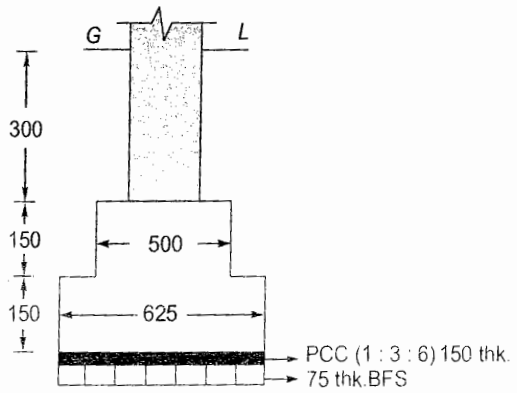


All the dimensions are in mm.

The quantity of 150 thick PCC (1 : 3 : 6) per metre is

(a) 0.094 sq.m (b) 0.094 cu.m

(c) 0.0625 sq.m (d) 0.0625 cu.m

[SSC - JE : 2012]

**1.3** The measurement is NOT made in square metres in case of

(a) Damp proof course

(b) Form works

(c) Concrete Jaffries

(d) R.C. Chhajja

[SSC - JE : 2012]

**1.4** For one sq.m. single brick flat soling (conventional size), the number of bricks required is

(a) 54 (b) 62

(c) 32 (d) 44

[SSC - JE : 2012]

**1.5** The number of bricks (conventional size) required for one square metre of brick on edge soling is

(a) 54 (b) 64

(c) 34 (d) 44

[SSC - JE : 2012]

**1.6** For 1 sq. m. of 7.5 cm thick lime terracing in roof with brick khoa, Surkhi, lime (2 : 2 : 7) including finishing, the quantity of Surkhi required is

(a) 0.023 cu.m (b) 0.025 cu.m

(c) 0.019 cu.m (d) 0.022 cu.m

[SSC - JE : 2012]

**1.7** In straight line method, the annual depreciation of the property is

(a) $\frac{\text{Original cost - Annual sinking fund}}{\text{Life (in years)}}$

(b) $\frac{\text{Life (in years)}}{\text{Original cost + Scrap value}}$

(c) $\frac{\text{Original cost - Scrap value}}{\text{Life (in years)}}$

(d) $\frac{\text{Original cost + Scrap value}}{\text{Life (in years)}}$

[SSC - JE : 2012]

**1.8** For 15 mm thick cement plastering 1 : 6 on 100 sq.m. new brick work, the quantity of cement required is

(a) 0.200 $m^3$ (b) 0.247 $m^3$
(c) 0.274 $m^3$ (d) 0.343 $m^3$

**[SSC : JE : 2013]**

**1.9** Number of modular bricks required for one cubic metre of brick masonary are
(a) 400 (b) 450
(c) 550 (d) 500

**[SSC : JE : 2013]**

**1.10**

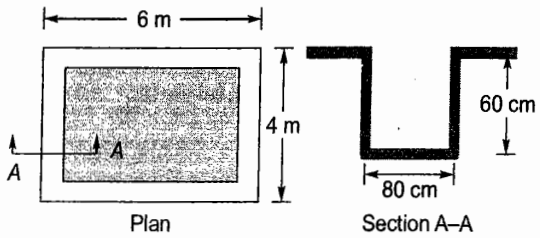


The above figure represents plan and section of an excavation layout. The volume of earthwork in excavation of foundation trench is
(a) 6.528 cu. m (b) 8.064 cu. m
(c) 8.832 cu. m (d) 9.600 cu. m

**[SSC : JE : 2013]**

**1.11** If $d$ be the diameter of MS or tor steel bar in mm, the standard weight (in kg) per metre of the bar is
(a) 0.00618 $d^2$ (b) 0.00618 $d$
(c) 0.00816 $d^2$ (d) 0.00816 $d$

**[SSC : JE : 2013]**

**1.12** Most accurate method of estimation is based on
(a) Building cost index estimate
(b) Plinth area estimate
(c) Detailed estimate
(d) Cube rate estimate

[SSC - JE (Forenoon) : 2014]

**1.13** The plan of a building is in the form of a rectangle with centre line dimensions of the outer walls as 10.3 m × 15.3 m. The thickness of the walls in superstructure is 0.3 m. Then its carpet area is
(a) 150 $m^2$ (b) 157.59 $m^2$
(c) 165.36 $m^2$ (d) 170 $m^2$

[SSC - JE (Forenoon) : 2014]

**1.14** Pick up the item of work not included in the plinth area estimate.
(a) Wall thickness
(b) Room area
(c) Verandah area
(d) Courtyard area

**[SSC - JE (Forenoon) : 2014]**

**1.15** One brick thickness of wall is roughly equal to
(a) 10 cm (b) 15 cm
(c) 20 cm (d) 30 cm

**[SSC - JE (Forenoon) : 2014]**

**1.16** The damp proof course (D.P.C.) of uniform thickness in a building having walls of different widths is measured in
(a) $m^4$ (b) $m^3$
(c) $m^2$ (d) m

**[SSC - JE (Forenoon) : 2014]**

**1.17** Volume by Trapezoidal Formula Method is determined by the formula

(a) $D\left\{\frac{A_0 + A_n}{2} + A_2 + A_4 + A_6 ... A_{n-1}\right\}$

(b) $D\left\{\frac{A_1 + A_n}{2} + A_0 + A_1 + A_3 ... A_{n-1}\right\}$

(c) $D\left\{\frac{A_0 + A_1}{2} + A_1 + A_3 + A_5 ... A_{n-1}\right\}$

(d) $D\left\{\frac{A_0 + A_n}{2} + A_1 + A_2 + A_3 + A_4 ... A_{n-1}\right\}$

**[SSC - JE (Forenoon) : 2014]**

**1.18** The quantity of wood for the shutters of doors and windows is calculated in
(a) $m^3$ (b) lump-sum
(c) m (d) $m^2$

[SSC - JE (Afternoon) : 2014]

**1.19** The plan of a building is in the form of square with centreline dimensions of outer walls as 14.7 m × 14.7 m. If the thickness of the wall in superstructure is 0.30 m, then its plinth area is :
(a) 234 $m^2$ (b) 150 $m^2$
(c) 216 $m^2$ (d) 225 $m^2$

[SSC - JE (Afternoon) : 2014]

**1.20** Thickness of plastering is usually
(a) 40 mm (b) 6 mm
(c) 12 mm (d) 25 mm

[SSC - JE (Afternoon) : 2014]

## Answers Estimates

1.1 (a) 1.2 (b) 1.3 (d) 1.4 (c) 1.5 (a) 1.6 (d) 1.7 (c) 1.8 (a) 1.9 (d)

1.10 (b) 1.11 (a) 1.12 (c) 1.13 (a) 1.14 (d) 1.15 (c) 1.16 (c) 1.17 (d) 1.18 (d)

1.19 (d) 1.20 (c)

## Explanations Estimates

**1.2 (b)**

Quantity of 150 thick PPC per m

$= 0.625 \times 0.15$

$= 0.09375\ m^3/m$ of footing

**1.3 (d)**

Quantity of concrete required for RC chajja is measured in cubic meters.

**1.4 (c)**

Conventional size of brick

$= 250\ mm \times 125\ mm \times 75\ mm$

∴ No. of bricks required in 1 $m^2$

$$= \frac{1 \times 1}{0.25 \times 0.125} = 32$$

**1.5 (a)**

For edge soling,

$$\text{No. of bricks required} = \frac{1 \times 1}{0.250 \times 0.075} = 54$$

**1.8 (a)**

Total volume of plastering

$= 100 \times 0.015\ m^3 = 1.5\ m^3$

Volume of cement required

$$= \frac{1.5}{7} \times 1 = 0.21\ m^3$$

**1.9 (d)**

As per clause 6.1 of IS 1077 : 1992, size of modular brick is 200 mm × 100 mm × 100 mm

∴ No of bricks required for 1 $m^3$ brick masonry

$$= \frac{1}{0.2 \times 0.1 \times 0.1} = 500$$

**10 (b)**

Volume of earthwork

$= [4 \times 6 - (4 - 2 \times 0.8) \times (6 - 2 \times 0.8)] \times 0.6$

$= 8.064\ m^3$

**1.11 (a)**

$$\text{Standard weight of the bar} = \frac{D \times D}{162}$$

**1.12 (c)**

In detailed estimates, a complete schedule of all the possible items which are likely to occur, is prepared and prepared unit costs are applied to these items. Thus, a detailed estimate provides an amount which is very near to the final amount of the structure. Thus the detailed estimates are accurate estimates and they are prepared mainly for the following two purposes viz. Execution processes and obtaining technical sanction.

**1.13 (a)**

Carpet area is the area enclosed within the walls. This area does not include the thickness of wall.

∴ Carpet area

$= (10.3 - 0.3) \times (15.3 - 0.3)$

$= 150\ m^2$

**1.14 (d)**

Plinth area is the built up covered area of a building measured at floor level at any storey. It is calculated by taking the external dimension of the building at the floor level excluding plinth off-sets, courtyards, open areas, balconies cantilever projections are not included in plinth area.

The following shall be included in the plinth area.

- All floor area of walls at the floor level excluding plinth of sets if any.
- Internal shafts for sanitary installation provided these do not exceed 2 sq.m. in area air condition ducts, lifts etc.
- The area of parasites and the area of mufti at terrace level.
- Area of porch other than cantilevered.

The following shall not be included in the plinth area.

- Area of loft.
- Internal sanitary shafts provided these do not more than 2 sq. m. in area.
- In enclosed balconies.
- Towers, sunshade, domes, etc. projecting above the terrace level, not forming a storey at the terrace level.
- Architectural bonds, cornices etc.
- Sunshade, vertical sun breakers of box louvers projecting out.

**1.19 (d)**

Plinth area = (14.7 + 0.3) × (14.7 + 0.3)

= 225 $m^2$

**1.20 (c)**

Recommended thickness of cement plastering for various cases are:

(i) 6 mm thick on RCC surface

(ii) 10 mm thick on underside of RCC roof/ceiling

(iii) 12 mm thick for plain side of brick masonry

(iv) 15 mm thick for rough side of brick masonry

(v) 20 m thick plastering is done in special cases

■■■■

# 2 Rate Analysis, Valuation and Miscellaneous

## Rate Analysis

**2.1** A work costing ₹ 20,000 is termed as
(a) Petty work (b) Minor work
(c) Major work (d) Minor project
**[SSC - JE (Forenoon) : 2014]**

**2.2** The following document contains detailed description of all items of work excluding their quantities, along with the current rates :
(a) Analysis of rates (b) Tender document
(c) Abstract estimate (d) Schedule of rates
**[SSC - JE (Afternoon) : 2014]**

**2.3** The correct prismoidal formula for volume calculation is:

(a) $\frac{D}{6}$ [first section area + last section areas + 2Σ even numbered section area + 4 Σ odd numbered section area]

(b) D [first section area + last section area + Σeven numbered section area + 2Σ odd numbered section areas]

(c) $\frac{D}{3}$ [first section area + last section area + 4Σ even numbered section area + 2Σ odd numbered section area]

(d) $\frac{D}{3}$ [first section area + last section area + 2Σ even numbered section area + 4Σ odd numbered section areas]
**[SSC - JE (Afternoon) : 2014]**

## Valuation

2.4 The quantity of brickwork in foundation and plinth per day per mason should be
(a) 1.75 cu.m (b) 2.5 cu.m
(c) 1.0 cu.m (d) 1.25 cu.m
**[SSC - JE : 2012]**

**2.5** If '$i$' is the rate of interest expressed in decimal and '$n$' is the number of years, then coefficient of annual sinking fund factor, $I_c$ is

(a) $I_c = \frac{[(1+i)^n - 1]}{(1+i)-1}$ (b) $I_c = \frac{i}{(1+i)^n - 1}$

(c) $I_c = \frac{i}{(1-i)^n + 1}$ (d) $I_c = \frac{i}{(1+i)^n + 1}$
**[SSC : JE : 2013]**

**2.6** The annual installment ($I$) of the sinking funds(S) over n years, at $i$ rate of interest may be calculated from the formula
(a) $I = Si/(1 + i)^{n-1}$
(b) $I = S(1 + i)^{n-1}/i$
(c) $I = S(1 + i)^{n+1}/(1 + i)$
(d) $I = Si/(1 + i)^{n+1}$
**[SSC - JE (Forenoon) : 2014]**

**2.7** The value of the property at the end of its useful life (without being dismantled) is known as
(a) Salvage value (b) Scrap value
(c) Book value (d) Junk value
[SSC - JE (Forenoon) : 2014]

**2.8** The value of property during its useful life based on purchase value and depreciations etc. is know as
(a) Junk value (b) Salvage value
(c) Scrap value (d) Book value
**[SSC - JE (Afternoon) : 2014]**

**2.9** Using straight line method, annual depreciation $D$ is equal to

(a) $\frac{\text{Life in year-Scrap value}}{\text{Original cost}}$

(b) $\frac{\text{Scrap value-life (in year)}}{\text{Original cost}}$

(c) $\frac{\text{Original cost-life (in year)}}{\text{Scrap value}}$

(d) $\frac{\text{Original cost-Scrap value}}{\text{Life (in year)}}$

[SSC - JE (Afternoon) : 2014]

## Miscellaneous

2.10 Administrative head of Public Works Department who is directly responsible to Government is :
(a) Assistant Engineer
(b) Executive Engineer
(c) Superintending Engineer
(d) Chief Engineer

[SSC - JE (Afternoon) : 2014]

2.11 If R and T are rise and tread of a stair spanning horizontally and steps are supported by wall on the side and by stringer beam on the otherside, the steps are designed as beam of width:

(a) $\frac{(R+T)}{2}$ (b) $R+T$

(c) $T-R$ (d) $\sqrt{R^2+T^2}$

[SSC - JE (Afternoon) : 2014]

■■■■

## Answers Rate Analysis, Valuation and Miscellaneous

2.1 (a) 2.2 (d) 2.3 (c) 2.4 (d) 2.5 (b) 2.6 (a) 2.7 (a) 2.8 (d) 2.9 (d)
2.10 (d) 2.11 (d)

## Explanations Rate Analysis, Valuation and Miscellaneous

2.1 (a)
Petty work ≤ ₹ 20,000
Minor work = ₹ 20, 000 to 100,000
Major work ≥ ₹ 100,000

2.4 (d)
Approximate quantity of work for an average mason per day is
(i) Brick work in plinth and foundation = 1.25 $m^3$
(ii) Brick work in superstructure = 1.0 $m^3$
(iii) Brick work in arches = 0.55 $m^3$
(iv) RCC work = 3.0 $m^3$
(v) 12 mm plastering with cement = 8 $m^2$
(vi) Painting doors or windows = 25 $m^2$
(vii) Earthwork is excavation = 3 $m^3$

2.7 (a)
It is the estimated value that an asset will realize upon its sale at the end of its useful life. This value is used in accounting to determine depreciation amounts and in the tax system to determine deductions.

2.8 (d)
Book value = original cost (or purchase value) – accumulated depreciation.
Book value at the end of year becomes book value at the beginning of next year. The asset is depreciated until the book value equal scrap value.

2.10 (d)
Hierarchy order is:
Chief engineer > Superintending engineer > Executive engineer > Assistant engineer.

■■■■

SSC

Junior Engineer

Civil Engineering

Paper I : Objective

# Unit III

# Surveying

## Contents


| Sl. | Topic | Page No. |
|---|---|---|
| 1. | Fundamental Concepts of Surveying | 27 |
| 2. | Theodolites, Compass and Traverse Surveying | 30 |
| 3. | Levelling and Contouring | 34 |
| 4. | Tacheometric, Curve & Hydrographic Surveying | 36 |


OOOO

# 1 Fundamental Concepts of Surveying

1.1 The fixed point whose elevation is known, is called as
(a) benchmark (b) change point
(c) reduced level (d) station
[SSC : JE : 2011]

1.2 Which of the following scales is the smallest one?
(a) 4 : 200000
(b) 1 cm = 5000 m
(c) 1 cm = 50 m
(d) RF = 1/50000
[SSC - JE : 2012]

1.3 When the curvature of earth is taken into account, the surveying is called as
(a) Plane surveying
(b) Preliminary surveying
(c) Geodetic surveying
(d) Hydrographic surveying
[SSC - JE : 2012]

1.4 Ranging is defined as
(a) measuring the distance from starting point
(b) establishing intermediate points on a chain line
(c) the distance between end points
(d) a point on a chain line
[SSC : JE : 2013]

1.5 A line joining some fixed points on the main survey lines is called as
(a) check line (b) tie line
(c) chain line (d) base line
[SSC : JE : 2013]

1.6 The main principle of field surveying is to work from
(a) higher level to lower level
(b) lower level to higher level
(c) part to whole
(d) whole to part
[SSC : JE : 2013]

1.7 "Offsets" are
(a) Lateral measurements from chain line
(b) Ties or check lines which are perpendicular to chain line
(c) Sets of minor measurements in chain surveying
(d) Chain lines which go out of alignments
[SSC : JE : 2013]

1.8 The fundamental principle of surveying is to work from the
(a) whole to part
(b) part to whole
(c) lower level to higher level
(d) higher level to lower level
[SSC - JE (Forenoon) : 2014]

1.9 Which of the following statements in respect of a map A having scale 1 : 1000 and another map B having scale 1 : 5000 is true ?
(a) Map A is a large scale map compared to map B
(b) Map B is a large scale map compared to map A
(c) Map B is a more detailed map compared to map A
(d) None of the above
[SSC - JE (Forenoon) : 2014]

1.10 The correction to be applied to each 30 m chain length for a line measurement along a slope of $\theta$ is
(a) $30(1-\cos\theta)$ (b) $30(1-\sin\theta)$
(c) $30(1-\tan\theta)$ (d) $30(1-\cot\theta)$
[SSC - JE (Forenoon) : 2014]

1.11 The magnetic declination is the difference between
(a) True meridian and false meridian
(b) False meridian and true meridian

(c) True meridian and magnetic meridian
(d) Magnetic meridian and false meridian

**[SSC - JE (Forenoon) : 2014]**

**1.12** The type of surveying which requires least office work is (least calculation) :
(a) Theodolite surveying
(b) Tacheometry
(c) Trignometrical levelling
(d) Plane table surveying

**[SSC - JE (Afternoon) : 2014]**

**1.13** When 1 cm on a map represents 10 m on the ground, the representative fraction of the scale is :

(a) $\frac{1}{10000}$ (b) $\frac{1}{10}$

(c) $\frac{1}{100}$ (d) $\frac{1}{1000}$

$1m = 100cm$

$\frac{1cm}{10m} = \frac{1cm}{10,00cm}$

**[SSC - JE (Afternoon) : 2014]**

■■■■

## Answers Fundamental Concepts of Surveying

**1.1** (a) **1.2** (b) **1.3** (c) **1.4** (b) **1.5** (b) **1.6** (d) **1.7** (a) **1.8** (a) **1.9** (a)
**1.10** (a) **1.11** (c) **1.12** (d) **1.13** (d)

## Explanations Fundamental Concepts of Surveying

**1.1 (a)**
It is a fixed point of known elevation above the detum. Datum is the level surface (real or imaginary) used for reference.

**1.2 (b)**

$$4 : 2,000,00 = 1 : 5,00,00$$
$$1 \text{ cm} = 500 \text{ m} \Rightarrow 1 \text{ cm} : 5,000,00 \text{ cm}$$
$$= 1 : 5,00,000$$
$$1 \text{ cm} = 50 \text{ m} \Rightarrow 1 \text{ cm} = 50,00 \text{ cm}$$
$$= 1 : 5000$$
$$\text{RF} = 1 : 5,000$$

**1.3 (c)**
**Plane surveying:** Mean surface of earth is considered as plane.

**Geodetic surveying:** Curvature of the earth is taken into account.

**1.4 (b)**
The process of locating intermediate points on survey line is known as ranging.

Types:
(i) **Direct ranging:** If first and last points are intervisible
(ii) **Indirect or reciprocal levelling:** If there is obstruction between first and last point so that they are not intervisible.

**1.5 (b)**
**Check line:** Line which is run to check the accuracy.
**Tie line:** Line which joins subsidiary or tie stations on the main line.
**Base line:** The largest of the main survey line is called as base line.

**1.7 (a)**
Offsets are lateral measurements from base line to fix the position of different objects with respect to the base line.
There are two types of offsets:
(i) Perpendicular offset
(ii) Oblique offset

**1.8 (a)**
Fundamental principles of surveying:
(i) Measuring distances from two fixed points
(ii) Working from whole to part

**1.9 (a)**
Large scale maps are more detailed compared to small scale maps.

**1.10 (a)**

$$d = S\cos\theta$$
$$\therefore \quad \text{Correction} = S - d$$
$$= S(1 - \cos\theta)$$

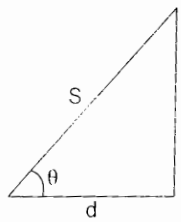

**1.11 (c)**

Magnetic declination is the angle on the horizontal plane between magnetic north (the direction the north end of a compass needle points, corresponding to the direction of the earth's magnetic field lines) and true north (the direction along a meridian towards the geographic north pole). This angle varies depending on position on the Earth's surface, and changes with time.

**1.12 (d)**

It allows the use of graphical methods rather than mathematical calculations.

**1.13 (d)**

1 cm = 10 m ⇒ 1 cm = 1000 cm

$$\therefore \quad RF = \frac{1}{1000}$$

■■■■

# 2 Theodolites, Compass and Traverse Surveying

**2.1** Detailed plotting in plane table surveying is generally done by
(a) Resection (b) Traversing
(c) Both (a) and (b) (d) Radiation
**[SSC - JE : 2012]**

**2.2** Theodolite is an instrument used for measurement of
(a) Both horizontal and vertical angles
(b) Distance only
(c) Horizontal angles only
(d) Vertical angles only
**[SSC - JE : 2012]**

**2.3** If the magnetic bearing of the Sun at a place at noon in southern hemisphere is 167°, the magnetic declination at that place is
(a) 13° W (b) 13° E
(c) 77° N (d) 23° S
**[SSC - JE : 2012]**

**2.4** The angle between the prolongation of the preceding line and the forward line of a traverse is called
(a) Direct angle (b) Exclude angle
(c) Deflection angle (d) Included angle
**[SSC - JE : 2012]**

**2.5** If the end points of a line are free from local attraction, the difference between fore bearing and back bearing of that line should be
(a) 180° (b) 120°
(c) 360° (d) 90°
**[SSC - JE : 2012]**

**2.6** The fore bearing of line CD is 324° 45′. The back bearing of the line is
(a) 144° 45′ (b) 54° 45′
(c) 234° 45′ (d) 35° 45′
**[SSC - JE : 2012]**

**2.7** The principle of working of optical square is based on
(a) Double reflection (b) Double refraction
(c) Reflection (d) Refraction
**[SSC - JE : 2012]**

**2.8** Compute the angle between the lines AB and AC, if their respective bearings are 52°30′ and 328°45′
(a) 276°15′ (b) 6°15′
(c) 111°15′ (d) 83°45′
**[SSC : JE : 2013]**

**2.9** The whole circle bearing of a line is 287°15′. The reduced bearing of the line is
(a) S 107°15′ W (b) S 17°15′ W
(c) N 72°45′ W (d) S 107°15′ E
**[SSC : JE : 2013]**

**2.10** The fore bearings of the lines AB and BC are 40° and 120° respectively. The included angle between AB and BC is
(a) 40° (b) 60°
(c) 80° (d) 100°
**[SSC : JE : 2013]**

**2.11** If the sum of northings of a traverse exceeds the sum of southings by 1 m and sum of eastings exceeds the sum of westings by 1m, the resultant closing error and its true bearing are respectively,
(a) $\sqrt{2}$ m, N 45° E (b) 1 m, N 45° E
(c) 2 m, N 45° W (d) 2 m, N 45° E
**[SSC : JE : 2013]**

**2.12** In a closed traverse, the sum of the north latitudes is more than the sum of the south latitudes and also the sum of west departures is more than the sum of east departures. The bearing of the closing line is in the
(a) SE quadrant (b) NE quadrant
(c) NW quadrant (d) SW quadrant
**[SSC : JE : 2013]**

**2.13** The angle between true meridian and the magnetic meridian at the time of observation is knows as
(a) Orientation (b) Magnetic declination
(c) Magnetic bearing (d) Dip
**[SSC : JE : 2013]**

**2.14** Radiation, intersection and resection are
(a) Compass Surveying Techniques
(b) Chain surveying techniques
(c) Levelling techniques
(d) Plane table surveying techniques
**[SSC - JE (Forenoon) : 2014]**

**2.15** In the quadrantal bearing system, a whole circle bearing of 293° 30′ can be expressed as :
(a) N 23° 30′ W (b) W 23° 30′ N
(c) N 66° 30′ W (d) S 113° 30′ N
**[SSC - JE (Afternoon) : 2014]**

**2.16** The most accurate instrument for measuring horizontal and vertical angles is :
(a) Theodolite (b) Dumpy level
(c) Compass (d) Tape and chain
**[SSC - JE (Afternoon) : 2014]**

**2.17** When the magnetic bearing of the sun at noon is 185°20′, the magnetic declination will be
(a) 5°20′ south (b) 5°20′ east
(c) 5°20′ west (d) 5°20′ north
**[SSC - JE (Afternoon) : 2014]**

**2.18** The correction for sag is:
(a) Some times additive and sometimes subtractive
(b) Always additive
(c) Always subtractive
(d) Always zero
**[SSC - JE (Afternoon) : 2014]**

**2.19** If whole circle bearing of a line is 210° 0' 0", its value in quadrantal bearing system is
(a) S 30° 0′ 0″ W (b) N 30° 0′ 0″ E
(c) S 30° 0′ 0″ E (d) N 30° 0′ 0″ W
**[SSC - JE (Forenoon) : 2014]**

■■■■

## Answers Theodolites, Compass and Traverse Surveying

**2.1 (d) 2.2 (a) 2.3 (a) 2.4 (c) 2.5 (a) 2.6 (a) 2.7 (a) 2.8 (d) 2.9 (c)**
**2.10 (d) 2.11 (a) 2.12 (c) 2.13 (b) 2.14 (d) 2.15 (c) 2.16 (a) 2.17 (c) 2.18 (c)**
**2.19 (a)**

## Explanations Theodolites, Compass and Traverse Surveying

2.2 (a)
Theodolite is a surveying instrument with a rotating telescope for measuring horizontal and vertical angles.

2.3 (a)

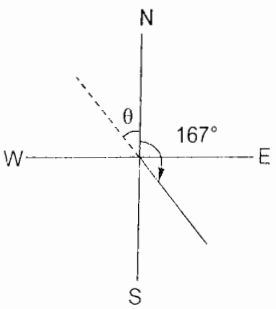


$$\theta = 180° - 167°$$
$$= 13° \text{ W}$$

2.4 (c)
In surveying, a horizontal angle measured from the prolongation of the preceding line to the forward line of traverse. Deflection angles to the right are positive, those to the left are negative.

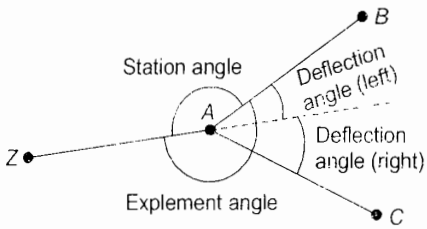

**2.6 (a)**

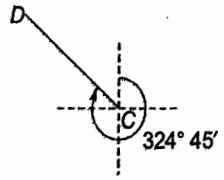


$BB = FB \pm 180°$

$= 324° 45' - 180$

$= 144° 45'$

**2.7 (a)**

Working principle of optical square: The angle between the first incident ray and last reflected ray is double the angle between two mirrors.

**2.8 (d)**

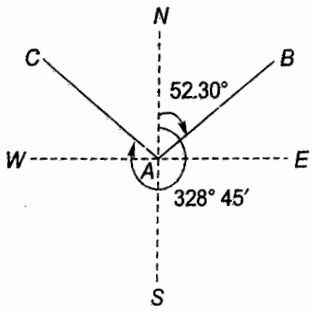


Angle between $AB$ and $AC$

$= 52° 30' + 360° - 328° 45'$

$= 83° 45'$

**2.9 (c)**

Since line lies in Northwest (NW) quadrant

Reduced bearing $= 360° - WCB$

$= 360° - 287° 15'$

$= 72° 45'$

∴ Reduced bearing = N 72° 45′ W

**2.10 (d)**

$\theta_1 = 40°$

$\theta_2 = 120°$

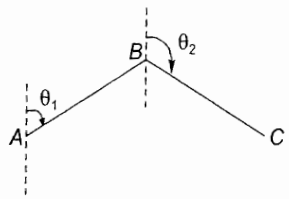


∴ Included angle = Bearing of previous line − bearing of next line

= Bearing of $BA$ − Bearing of $BC$

∴ $\angle ABC = 180° + \theta_1 + \theta_2$

$= 180° + 40° - 120°$

$= 100°$

**2.11 (a)**

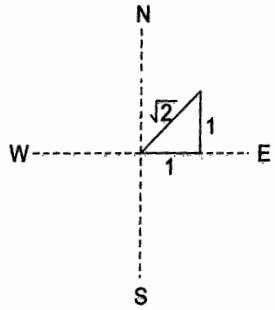


From the figure.

Magnitude of error $= \sqrt{1^2 + 1^2} = \sqrt{2}\,m$

True bearing = N 45° E

**2.13 (b)**

The angle between the magnetic meridian and true meridian is the magnetic declination.

**2.15 (c)**

Since WCB is between 270° and 360°, line lies in NW quadrant

∴ Quadrantal bearing

$= 360° - WCB$

$= 360 - 293° 30'$

$= 66° 30'$

∴ Quadrantal bearing

= N 66° 30′ W

**2.16 (a)**

A theodolite is a precision instrument used for measuring angles both horizontally and vertically.

- *Dumpy level:* It is an a optical instrument used to establish or verify points in the same horizontal plane. It is used in surveying and building with a vertical staff to measure height differences and to transfer, measure and set heights.
- *Compass:* It is used in Compass surveying wherein the directions of surveying lines are determined with a magnetic compass, and the length of the surveying lines are measured with a tape or chain or laser range finder. The compass is generally used to run a traverse line. The compass calculates bearings of lines with respect to magnetic north.

- Tape and chain.
  (i) **Types of tapes used:** Cloth or linen tape, Metric woven metallic tape, Metric steel tape, Invar tape, Synthetic tape.
  (ii) **Types of chains used:** Metric chain, Steel band chain, Gunter's chain, Revenue chain, Engineer chain.

**2.17 (c)**

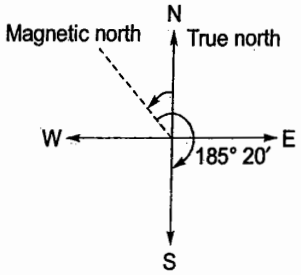


Declination = 185° 20′ – 180°
= 5° 20′ West

**2.18 (c)**

Due to sag the distance measured is always more than the actual distance.

**2.19 (a)**

Since value of WCB is between 180° and 270°, the line lies in South West (SW) quadrant.

∴ Quadrantal bearing = WCB – 180°
= 210° – 180° = 30°

∴ Quadrantal bearing = S 30° W

■■■■

# 3 Levelling and Contouring

**3.1** The correction in elevation due to the curvature and refraction is proportional to

(a) $D/R$ (b) $D^2/R$

(c) $R/D^2$ (d) $R/D$

Where $R$ is the radius of curvature of earth and $D$ is the horizontal distance.

**[SSC : JE : 2011]**

**3.2** The correction for slope in chaining is proportional to

$C_h = \frac{h^2}{2L}$

(a) $\sqrt{h}$ (b) $h$

(c) $h^2$ (d) $h^3$

**[SSC : JE : 2011]**

**3.3** Which of the following methods of contouring is most suitable for hilly terrain?

(a) Direct method

(b) Square method

(c) Cross-section method

(d) Tacheometric method

**[SSC : JE : 2013]**

**3.4** A level line is a

(a) line parallel to the mean spheroidal surface of the earth

(b) line passing through centre of cross hairs and centre of eye-piece

(c) line passing through objective lens and the eye-piece

(d) horizontal line

[SSC : JE : 2013]

**3.5** Narrowly spaced contour lines on a map shows that the area is

(a) Flat (b) Steeply sloped

(c) Vertical cliff (d) Overhang cliff

**[SSC - JE (Forenoon) : 2014]**

**3.6** A staff reading taken on a point whose elevation is to be determined as a change point is called

(a) foresight reading

(b) backsight reading

(c) intermediate sight

(d) long sight

**[SSC - JE (Forenoon) : 2014]**

**3.7** The contour lines can cross one another on map only in the case of :

(a) an overhanging cliff

(b) a vertical cliff

(c) a valley

(d) a ridge

**[SSC - JE (Afternoon) : 2014]**

**3.8** The height of insturment is equal to

(a) Reduced level of bench mark – back sight

(b) Reduced level of bench mak + back sight

(c) Reduced level of bench mark + fore sight

(d) Reduced level of bench mark + Intermediate sight

[SSC - JE (Afternoon) : 2014]

■■■■

## Answers Levelling and Contouring

3.1 (b) 3.2 (c) 3.3 (d) 3.4 (a) 3.5 (b) 3.6 (b) 3.7 (a) 3.8 (b)

## Explanations Levelling and Contouring

**3.1 (b)**

Correction due to curvature and refraction = $\frac{6}{7}\frac{D^2}{2R}$

**3.2 (c)**

Slope correction = $\frac{h^2}{2L}$

**3.3 (d)**

Methods of contouring:

(i) **Direct method:** In this method, points of equal elevation on the terrain are physically located and then plotted on map. This is a tedious process and requires more time and resources than required in the indirect method.

(ii) **Indirect method:** It is subdivided into following three methods:

(a) Cross-section method: Most suitable for road works, rail works, canals etc.

(b) Square or Grid method: Used for contouring of plains or gently sloping ground. Square grids are marked on the land, levels are then taken at all the corners of the square and intersection of diagonals.

(c) Tacheometric method: Used for contouring of very steep hills with the help of a tacheometer.

**3.4 (a)**

A level line is a line lying on a level surface.

**3.5 (b)**

Smaller the contour spacing, steeper the slope.

**3.6 (b)**

Back sight reading is the first staff reading taken by the surveyor after the levelling instrument is set up and levelled. Back sight is generally taken on the point of known reduced level as on the benchmark or point whose elevation is to be determined as a change point.

**3.7 (a)**

No two contour lines can meet or cross each other except in the rare case of an overhanging vertical cliff.

**3.8 (b)**

H.I. = Elevation of bench mark + Back sight

■■■■

# 4 Tacheometric, Curve & Hydrographic Surveying

**4.1** For an anallatic tacheometer, the additive and multiplying constants are respectively
(a) 100 and 0 (b) 0 and 100
(c) 0 and 0 (d) 100 and 100
**[SSC - JE : 2012]**

**4.2** The multiplying constant for the tacheometer is, generally, kept as
(a) 100 (b) 20
(c) 40 (d) 60
**[SSC - JE (Forenoon) : 2014]**

**4.3** The length of the tangent of a curve whose radius is $R$ and the angle of deflection $\Delta$ is
(a) $R\tan\frac{\Delta}{2}$ (b) $2R\sin\frac{\Delta}{2}$
(c) $2R\tan\frac{\Delta}{2}$ (d) $R\sin\frac{\Delta}{2}$
**[SSC - JE (Forenoon) : 2014]**

**4.4** Intersection method in plane table surveying is most suitable for:
(a) Plains (b) Forests
(c) Urban areas (d) Hilly areas
**[SSC - JE (Afternoon) : 2014]**

■■■■

## Answers Tacheometric, Curve & Hydrographic Surveying

**4.1 (b) 4.2 (a) 4.3 (a) 4.4 (d)**

## Explanations Tacheometric, Curve & Hydrographic Surveying

**4.1 (b)**
For anallatic tacheomteter,
$$D = kS + C$$
where, $k = 100$, $C = 0$

**4.4 (d)**
In intersection method of plane table surveying, the objects or points to be located are obtain at the point of intersection of radial lines drawn from two different stations. The intersection method is suitable when distances of objects are large or cannot be measured properly. Thus, this method is preferred in small scale survey and for mountainous regions.

■■■■

SSC Junior Engineer

Civil Engineering

Paper-I : Objective

# Unit IV

# Soil Mechanics

## Contents


| Sl. | Topic | Page No. |
|---|---|---|
| 1. | Properties, Classification of Soils Consolidation and Compaction, Permeability | 38 |
| 2. | Earth Pressure Theory, Stability Analysis of Slopes, Soil Stablization and Exploration & Foundation Engineering | 41 |


OOOO

# 1 Properties, Classification of Soils Consolidation and Compaction, Permeability

## Properties, Classification of Soils

**1.1** Relative density of a compacted dense sand is approximately equal to

(a) 0.4 (b) 0.6
(c) 0.95 (d) 1.20

**[SSC : JE : 2011]**

**1.2** Relationship between dry density $\gamma_d$, percentage air voids $n_a$, water content $w$ and specific gravity $G$ of any soil is

(a) $\gamma_d = \frac{(1+n_a)G\gamma_w}{1+wG}$ (b) $\gamma_d = \frac{(1+n_a)G\gamma_w}{1-wG}$

(c) $\gamma_d = \frac{(1-n_a)G\gamma_w}{1+wG}$ (d) $\gamma_d = \frac{(1-n_a)G\gamma_w}{1-wG}$

**[SSC : JE : 2011]**

**1.3** Match **List - I** with **List - II** and select the correct answer using the codes given below the lists:

| List - I (Name of person) | List - II (Field of contribution) |
|---|---|
| A. Stoke | 1. Flow through capillary |
| B. Darcy | 2. Classification of soils |
| C. Poiseuille | 3. Consistency limits |
| D. Atterberg | 4. Flow of water through a soil mass |
| | 5. Velocity of setling particle |

| | A | B | C | D |
|---|---|---|---|---|
| (a) | 5 | 4 | 1 | 3 |
| (b) | 4 | 1 | 5 | 2 |
| (c) | 1 | 5 | 4 | 2 |
| (d) | 3 | 2 | 1 | 5 |

**[SSC : JE : 2011]**

**1.4** If the plasticity index of a soil mass is zero, the soil is

(a) Clay (d) Clayed silt
(c) Sand (d) Silt

**[SSC - JE : 2012]**

**1.5** Water content of soil can

(a) be less than 0%
(b) be greater than 100%
(c) never be greater than 100%
(d) take values only from 0% to 100%

**[SSC - JE : 2012]**

**1.6** Sand particles are made of

(a) Kaolinite (b) Illite
(c) Montmorillonite (d) Quartz

**[SSC : JE : 2013]**

**1.7** If the volume of voids is equal to the volume of solids in a soil mass, than the values of porosity and voids ratio respectively are

(a) 1.0 and 0.0 (b) 0.0 and 1.0
(c) 0.5 and 1.0 (d) 1.0 and 0.5

**[SSC : JE : 2013]**

**1.8** Clay is generally

(a) cohesive
(b) permeable
(c) having large particle size
(d) none of the above

**[SSC - JE (Forenoon) : 2014]**

**1.9** The ratio $\frac{\text{Liquid limit} - \text{Water content}}{\text{Plasticity index}}$ for a soil mass is called

(a) Liquidity index
(b) Shrinkage ratio
(c) Consistency index
(d) Toughness index

**[SSC - JE (Forenoon) : 2014]**

**1.10** The volume of voids to the total volume of soil is known as

(a) porosity (b) void ratio
(c) air ratio (d) air content

**[SSC - JE (Forenoon) : 2014]**

1.11 The fundamental equation of void ratio ($e$), specific gravity ($G$), water content (w) and the degree of saturation ($S_P$) is

(a) $e = \frac{Gw}{S_P}$ (b) $w = \frac{eG}{S_P}$

(c) $G = \frac{ew}{S_P}$ (d) $S_P = \frac{ew}{G}$

[SSC - JE (Forenoon) : 2014]

1.12 If fineness modulus of a sand is 2.5, it is graded as

(a) very fine sand (b) fine sand
(c) medium sand (d) coarse sand

[SSC - JE (Forenoon) : 2014]

1.13 The relationship between void ratio '$e$' and porosity '$n$' is :

(a) $n = \frac{1+e}{1-e}$ (b) $e = n(1 + e)$

(c) $n = \frac{e}{1-e}$ (d) $e = \frac{1+n}{1-e}$

[SSC - JE (Afternoon) : 2014]

1.14 Gravel and sand belongs to the following category of soils

(a) alluvial (b) cohesive
(c) expansive (d) marine

[SSC - JE (Afternoon) : 2014]

1.15 When the plastic limit of a soil is greater than the liquid limit, then the plasticity index is reported as:

(a) 1 (b) Negative
(c) Zero (d) Non-plastic (NP)

[SSC - JE (Afternoon) : 2014]

## Consolidation and Compaction of Soils

1.16 The unit of the coefficient of consolidation is

(a) gm/cm$^2$/sec (b) gm–cm/sec
(c) cm$^2$/sec (d) cm$^3$/sec

[SSC - JE : 2012]

■■■■

## Answers Properties, Classification of Soils Consolidation and Compaction, Permeability

1.1 (c) 1.2 (c) 1.3 (a) 1.4 (c) 1.5 (b) 1.6 (d) 1.7 (c) 1.8 (a) 1.9 (c)

1.10 (a) 1.11 (a) 1.12 (b) 1.13 (b) 1.14 (a) 1.15 (c) 1.16 (c)

## Explanations Properties, Classification of Soils Consolidation and Compaction, Permeability

1.1 (c)

Relative density ($D_r$) or density index ($I_D$)

$$= \frac{e_{max} - e}{e_{max} - e_{min}}$$

Where, $e_{max}$ = Void ratio in loosest state
$e_{min}$ = Void ratio in densest state
$e$ = Void ratio in natural state

Relative density based classifciation of granular soils:

| ID (%) | Classification |
|---|---|
| 0 - 15 | Very loose |
| 15 - 35 | Loose |
| 35 - 65 | Medium |
| 65 - 85 | Dense |
| > 85 | Very dense |

1.2 (c)

$$\gamma_d = \frac{(1-n_a)G\gamma_w}{1+wG}$$

Where, $\gamma_d$ = dry density
$n_a$ = percentage air voids
$w$ = water content
$G$ = specific gravity of soil

1.3 (a)

Stoke — Velocity of settling particle.
Darcy — Flow of water through saturated soil mass
Poiseuille — Flow through capillary
Atterberg — Consistency limits and soil classification

**1.4 (c)**

Plasticity Index (PI) is the range of moisture content over which soil exhibits plasticity.

$$I_p = w_L - w_p$$

where $w_L$ = water content at liquid limit

$w_p$ = water content at plastic limit

$I_p = 0$

implies the soil is completely non-plastic, i.e., it is little/no clay or silt in it.

**1.5 (b)**

Water content, $w = \frac{W_w}{W_s} \times 100$

Where $W_w$ = Weight of water,

$W_s$ = Weight of solids

There is no upper limit to water content i.e., $w$>=0

**1.6 (d)**

The most common sand is composed of particles of quartz and feldspar.

**1.7 (c)**

Volume of void ($V_v$) = Volume of solids ($V_s$)

Void ratio, $e = \frac{V_v}{V_s} = 1$

Porosity, $n = \frac{V_v}{V} \times 100$

Where $V$ is total volume of soil

$$V = V_v + V_s = 2V_v$$

So $n = 0.5$

**1.9 (c)**

Consistency index = $\frac{LL - w}{P.I}$

Liquidity index = $\frac{w - P.L}{P.I}$

Toughness index = $\frac{P.I}{\text{Flow index}}$

**1.10 (a)**

Porosity, $n = \frac{V_v}{V} \times 100$

Where, $V$ = Total volume of soil

Porosity cannot exceed 100% i.e., $0 < n < 100\%$.

**1.11 (a)**

$$e = \frac{Gw}{S}$$

**1.12 (b)**

The Fineness Modulus (FM) is an empirical figure obtained by adding the total percentage of the sample of an aggregate retained on each of a specified series of sieves, and dividing the sum by 100.

| Type of Sand | Fineness Modulus Range |
|---|---|
| Very fine sand | < 2.2 |
| Fine sand | 2.2 - 2.6 |
| Medium sand | 2.6 - 2.9 |
| Coarse sand | 2.9 - 3.2 |

**1.13 (b)**

$$e = n(1 + e)$$

Where, $e$ = void ratio

$n$ = porosity

**1.14 (a)**

**Alluvial:** Consists of both fine particles of silt and clay and larger particles of sand and gravel.

**Expansive:** Contains a number of clay minerals like smectic, bentonite, etc. which expand in the presence of moisture.

**Cohesive:** Includes clayey silt, sandy clay, silty clay, clay and organic clay.

**Marine:** These are predominantly clay, very well sorted and devoid of coarse particles.

**1.15 (c)**

Plasticity index is the range of moisture over which soil exhibits plasticity. When $I_p$ = 0%. soil in non-plastic.

**1.16 (c)**

The coefficient of consolidation is the parameter used to describe the rate at which saturated clay or other soil undergoes consolidation, or compaction, when subjected to an increase in pressure.

■■■■

# 2 Earth Pressure Theory, Stability Analysis of Slopes, Soil Stablization and Exploration & Foundation Engineering

## Earth Pressure Theory, Stability Analysis of Slopes, Soil Stablization and Exploration

**2.1** The coefficient of active earth pressure for a loose sand having an angle of internal friction '$\phi$' is

(a) $\dfrac{1-\sin\frac{\phi}{2}}{1+\sin\frac{\phi}{2}}$ (b) $\dfrac{1+\sin\frac{\phi}{2}}{1-\sin\frac{\phi}{2}}$

(c) $\dfrac{1-\sin\phi}{1+\sin\phi}$ (d) $\dfrac{1+\sin\phi}{1-\sin\phi}$

**[SSC - JE : 2012]**

**2.2** A retaining wall of trapezoidal section having base width '*b*' retains earth at its back. For no tension to be developed at base, the resultant force will intersect the base from centre line of the base, within

(a) *b*/3 (b) *b*/4
(c) *b*/5 (d) *b*/6

[SSC : JE : 2013]

**2.3** Lime stabilization is very effective in treating

(a) Sandy soils (b) Silty soils
(c) Non-plastic soils (d) Plastic clayey soils

[SSC : JE : 2013]

## Foundation Engineering

**2.4** A shallow foundation is defined as a foundation which

(a) has low bearing capacity
(b) has a depth of embedment less than its width
(c) is resting on the ground surface
(d) causes less settlement

**[SSC : JE : 2011, 2013]**

**2.5** A plate load test is useful to estimate

(a) Both bearing capacity and settlement of foundation
(b) Consolidation of soil
(c) Bearing capacity of foundation
(d) Settlement of foundation

**[SSC - JE : 2012]**

**2.6** A 300 mm square bearing plate settles by 15 mm in a plate load test on a cohesive soil when the intensity of loading is 0.2 N/mm$^2$. The settlement of a prototype shallow footing 1 m square under the same intensity of loading is

(a) 15 mm (b) 30 mm
(c) 50 mm (d) 167 mm

[SSC : JE : 2013]

**2.7** Which one of the following has least bearing capacity?

(a) Loose gravel (b) Hard rocks
(c) Soft rocks (d) Compact gravel

[SSC - JE (Afternoon) : 2014]

■■■■

## Answers Earth Pressure Theory, Stability Analysis of Slopes, Soil Stabilization and Exploration & Foundation Engineering

2.1 (c) 2.2 (d) 2.3 (d) 2.4 (b) 2.5 (a) 2.6 (b) 2.7 (a)

## Explanations Earth Pressure Theory, Stability Analysis of Slopes, Soil Stabilization and Exploration & Foundation Engineering

**2.1 (c)**

$$k_a = \frac{1-\sin\phi}{1+\sin\phi}$$

Here $\phi$ = angle of internal friction.

**2.3 (d)**

Lime stabilization is addition of lime to make soil more workable and to impart long term strength and stability. Lime stabilization is useful for stabilization of clayey soils but it is not effective for sandy soils.

**2.4 (b)**

Shallow foundation has a depth of embedment less than its width.

For shallow foundations, the ratio of depth of foundation, D to the width of foundation, B is equal to or less than 1. Various types of shallow foundations are Wall footing, Isolated column footing or Pad footing, Combined footing, Cantilever or Strap footing, Mat foundation.

**Alternate**

$$S_P = S_F\left(\frac{b(B+0.3)}{B(b+0.3)}\right)^2$$

$\therefore$ $S_F$ = 35.5 mm; nearest ans. is (*b*)

**2.5 (a)**

**Plate load test** consists of loading a steel plate placed at the foundation level and recording the settlements corresponding to each load increment. The test load is gradually increased will the plate starts to sink at a rapid rate. The total value of load on the plate in such a stage divided by the area of the steel plate gives the value of the **ultimate bearing capacity of soil.**

**2.7 (a)**

Decreasing order of bearing capacity:

Hard rocks > Soft Rocks > Compact gravel > Loose gravel.

■■■■

SSC Junior Engineer

Civil Engineering

Paper-I Objective

# Unit V

# Hydraulics

## Contents


| Sl. | Topic | Page No. |
|---|---|---|
| 1. | Fluid Properties, Hydrostatic Forces, Buoyancy and Floatation | 44 |
| 2. | Fluid Kinematics, Dynamics & Flow Measurements, Flow Through Pipes and Dimensional Analysis | 46 |
| 3. | Open Channel Flow & Hydraulic Machinery | 49 |


OOOO

# 1 Fluid Properties, Hydrostatic Forces, Buoyancy and Floatation

1.1 The pressure intensity in kg/cm$^2$ at any point in a liquid is
(a) $w$ (b) $w/h$
(c) $h/w$ (d) $wh$
where $w$ is unit weight of liquid in kg/cm$^3$, $h$ is the depth of the point from liquid surface.
**[SSC : JE : 2011]**

1.2 The characteristic of an ideal fluid is
(a) one which satisfies continuity equation
(b) one which flows with least friction
(c) one which obeys Newton's law of Viscosity
(d) frictionless and incompressible
**[SSC - JE : 2012]**

1.3 A rectangular plate 1.25 m × 2.4 m is immersed in a liquid of relative density 0.85 with its 1.25 m side horizontal and just at the water surface. If the plane of the plate makes an angle of 60° with the horizontal, the pressure force on one side of the plate of
(a) 30.6 kN (b) 26.0 kN
(c) 15.0 kN (d) 30.0 kN
**[SSC - JE : 2012]**

1.4 The ratio of specific weight of a liquid to the specific weight of pure water at a standard temperature is called
(a) Compressibility of liquid
(b) Surface tension of liquid
(c) Density of liquid
(d) Specific gravity of liquid
**[SSC - JE : 2012]**

1.5 Bulk modulus of fluid is the ratio of
(a) shear stress to shear strain
(b) increase in volume to the viscosity of fluid
(c) increase in pressure to the volumetric strain
(d) critical velocity to the velocity of fluid
**[SSC : JE : 2013]**

1.6 The buoyancy depends upon the
(a) pressure with which the liquid is displaced
(b) weight of the liquid displaced
(c) viscosity of the liquid
(d) compressibility of the liquid
**[SSC : JE : 2013]**

1.7 Manometer is a device used for measuring
(a) Velocity (b) Pressure
(c) Density (d) Discharge
**[SSC - JE (Forenoon) : 2014]**

1.8 Capillarity is due to
I. surface tension
II. cohesion
III. viscosity
IV. weight density of liquid
(a) II, III (b) III
(c) I (d) II, III, V
**[SSC - JE (Forenoon) : 2014]**

1.9 Pressure in terms of metres of oil (specific gravity = 0.9) equivalent to 4.5 m of water is
(a) 4.05 (b) 5.0
(c) 3.6 (d) 0.298
**[SSC - JE (Forenoon) : 2014]**

1.10 Capillary rise is a phenomenon that is attributed to the following property of fluid
(a) vapour pressure (b) viscosity
(c) density (d) surface tension
**[SSC - JE (Afternoon) : 2014]**

1.11 Specific gravity has a unit :
(a) g/cc
(b) kg/m$^3$
(c) N/m$^3$
(d) No unit i.e., dimensionless
**[SSC - JE (Afternoon) : 2014]**

1.12 The total energy line lies above the hydraulic gradient line by an amount equal to :

(a) sum of pressure, velocity and datum heads

(b) Pressure head, $\frac{P}{\gamma}$

(c) Velocity head, $\frac{v^2}{2g}$

(d) datum head, $z$

[SSC - JE (Afternoon) : 2014]

1.13 A fluid, which is incompressible and is having no viscosity is

(a) Ideal fluid (b) Real fluid

(c) Newtonian fluid (d) Non Newtonian fluid

[SSC - JE (Afternoon) : 2014]

■■■■

## Answers Fluid Properties, Hydrostatic Forces, Buoyancy and Floatation

1.1 (d) 1.2 (d) 1.3 (a) 1.4 (d) 1.5 (c) 1.6 (b) 1.7 (b) 1.8 (c) 1.9 (b)

1.10 (d) 1.11 (d) 1.12 (c) 1.13 (a)

## Explanations Fluid Properties, Hydrostatic Forces, Buoyancy and Floatation

**1.3 (a)**

$$P = wA\bar{x}$$

$$= 9.81 \times 1.25 \times 2.4 \times \frac{2.4}{2} \sin 60°$$

$$= 30.58 \text{ kN}$$

**1.8 (c)**

Capillarity is due to the adhesion of the liquid to the sides of the tube and due to the surface tension of the liquid.

**1.9 (b)**

Pressure is terms of metres of oil $= \frac{4.5}{0.9} = 5$ m

**1.11 (d)**

Specific gravity is the ratio of the density of a substance to the density of a reference substance. Therefore it is dimensionless.

Total energy line = Pressure head ($p/\gamma$) + Velocity head ($v^2/2g$) + Elevation head ($h$)

Hydraulic grade line = Pressure head ($p/\gamma$) + Elevation head ($h$)

Velocity head ($v^2/2g$) = Total energy line − Hydraulic grade line

**1.12 (c)**

Total head = Datum head + Pressure head + Velocity head

■■■■

# 2 Fluid Kinematics, Dynamics & Flow Measurements, Flow Through Pipes and Dimensional Analysis

## Fluid Kinematics and Dynamics & Flow Measurements

**2.1** Venturimeter is used to
(a) measure the velocity of a flowing liquid
(b) measure the pressure of a flowing liquid
(c) measure the discharge of liquid flowing through a pipe
(d) measure the pressure difference of liquid flowing between two points in a pipe line
**[SSC : JE : 2011]**

**2.2** The discharge through a rectangular orifice is given by the expression as indicated below :
(a) $Q = \frac{2}{3} C_d b \sqrt{2g} \left(H_2^{1/2} - H_1^{1/2}\right)$
(b) $Q = \frac{2}{3} C_d b \sqrt{2g} \left(H_2^{3} - H_1^{3}\right)$
(c) $Q = \frac{2}{3} C_d b \sqrt{2g} \left(H_2^{2} - H_1^{2}\right)$
(d) $Q = \frac{2}{3} C_d b \sqrt{2g} \left(H_2^{3/2} - H_1^{3/2}\right)$
[SSC - JE : 2012]

**2.3** In the Bernoulli's equation written as $\frac{p}{\rho g} + \frac{v^2}{2g} + z =$ constant, each of the term represents energy per unit
(a) Weight (b) Length of flow
(c) Mass (d) Volume
[SSC - JE : 2012]

**2.4** In a two-dimensional flow of fluid, if a velocity potential function $\phi$ exists which satisfies the relation $\frac{\partial^2 \phi}{\partial x^2} + \frac{\partial^2 \phi}{\partial y^2} = 0$, then the flow is
(a) steady incompressible
(b) steady laminar and incompressible
(c) irrotational and incompressible
(d) turbulent and incompressible
**[SSC : JE : 2013]**

**2.5** The discharge over a rectangular notch is
(a) inversely proportional to $H^{3/2}$
(b) directly proportional to $H^{3/2}$
(c) inversely proportional to $H^{5/2}$
(d) directly proportional to $H^{5/2}$
**[SSC : JE : 2013]**

**2.6** The discharge through a *V*-notch varies
(a) proportional to head ($H$)
(b) inversely proportional to angle $\theta$
(c) proportional to $H^{5/2}$
(d) inversely proportional to $\tan \theta/2$
**[SSC - JE (Forenoon) : 2014]**

**2.7** Each term of the Bernoulli's equation represents
(a) energy per unit weight
(b) energy per unit mass
(c) energy per unit volume
(d) specific energy
[SSC - JE (Forenoon) : 2014]

**2.8** The value of $C_v$ for sharp edged orifice is generally
(a) 0.98 (b) 0.95
(c) 0.96 (d) 0.97
[SSC - JE (Afternoon) : 2014]

**2.9** Measurement of pressure difference between two points is, generally done by using
(a) Venturimeter
(b) Pitot tube
(c) Differential manometer
(d) None of the above
[SSC - JE (Afternoon) : 2014]

## Flow Through Pipes and Dimensional Analysis

**2.10** Which one of following is not a non-dimensional parameter?
(a) Chezy's coefficient
(b) Darcy-Weisbach friction factor
(c) Froude number
(d) Mach number
**[SSC - JE : 2012]**

**2.11** The length of a pipe is 1000 m and its diameter is 20 cm. If the diameter of an equivalent pipe is 40 cm, then its length is
(a) 4000 m (b) 32000 m
(c) 20000 m (d) 8000 m
**[SSC - JE : 2012]**

**2.12** In series-pipe flow problems
(a) The discharge is same through each pipe
(b) The discharge through each pipe is added to obtain total discharge
(c) The head loss is same through each pipe
(d) The Reynonld's number for each pipe is same
**[SSC - JE : 2012]**

**2.13** An air vessel is provided at the summit in a syphon to
(a) Increase velocity
(b) Maintain pressure difference
(c) Avoid interruption in the flow
(d) Increase discharge
**[SSC - JE : 2012]**

**2.14** The specific speed for a turbine has the dimensions
(a) $F^{1/2} L^{-3/4} T^{-3/2}$ (b) $T^1$
(c) $F^{1/2} L^{-5/2} T^{-3/2}$ (d) $F L^{-3/4} T^{-3/2}$
[SSC : JE : 2013]

**2.15** Reynolds number is the ratio of the inertia force to the
(a) surface tension force
(b) viscous force
(c) gravity force
(d) elastic force
**[SSC : JE : 2013]**

**2.16** The dimension for angular velocity is
(a) $T^2$ (b) $T^{-1}$
(c) $T^1$ (d) $T^{-2}$
**[SSC - JE (Forenoon) : 2014]**

**2.17** Which of the following flow constants does not have any unit?
(a) Chezy's C
(b) Manning's N
(c) Both Chezy's C and Manning's N
(d) None of the above
**[SSC - JE (Forenoon) : 2014]**

**2.18** Darcy – Weisbach equation to calculate the head loss due to friction for flow through pipes is applicable when the flow through the pipe can be
(a) laminar only
(b) turbulent only
(c) both laminar and turbulent
(d) subcritical flow
**[SSC - JE (Forenoon) : 2014]**

**2.19** The flow constant '*f*' in Darcy-Weisbach equation for head loss in pipe flow has a unit of :
(a) No unit i.e., imensionless
(b) m
(c) m/sec
(d) kg-m/sec
[SSC - JE (Afternoon) : 2014]

■■■■

**Answers** **Fluid Kinematics, Dynamics & Flow Measurements, Flow Through Pipes and Dimensional Analysis**

2.1 (c) 2.2 (d) 2.3 (a) 2.4 (c) 2.5 (b) 2.6 (c) 2.7 (a) 2.8 (a) 2.9 (c)
2.10 (a) 2.11 (b) 2.12 (a) 2.13 (c) 2.14 (a) 2.15 (b) 2.16 (b) 2.17 (d) 2.18 (c)
2.19 (a)

**Explanations** Fluid Kinematics & Dynamics & Flow Measurements, Flow Through Pipes and Dimensional Analysis

**2.2 (d)**

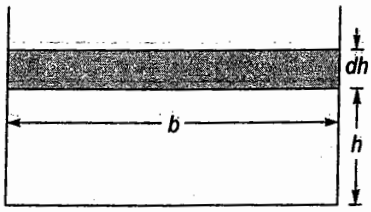


$$dQ = C_d b\sqrt{2gh}\, dh$$

or $$Q = \frac{2}{3}C_d b\sqrt{2g}\left[H_2^{3/2} - H_1^{3/2}\right]$$

**2.4 (c)**

Any function $\phi$ that satisfies Laplace equation will correspond to some case of irrotational flow.

**2.5 (b)**

$Q = \frac{2}{3}C_d b\sqrt{2g}\,H^{3/2}$, for rectangular notch

**2.6 (c)**

For a triangular notch

$$Q = \frac{8}{15}C_d\sqrt{2g}\,H^{5/2}\tan\frac{\theta}{2}$$

**2.8 (a)**

Value of $C_v$ varies from 0.95 to 0.99.

For sharp edged orifice it is taken as 0.98.

**2.9 (c)**

Venturimeter – Measurement of discharge

Pitot tube – Measuring velocity of flow

Differential manometer – Measuring of pressure difference

**2.11 (b)**

For pipe to be equivalent, head loss should be equal

$$\therefore \quad h_f = \frac{fLV^2}{2gD} = \frac{fLQ^2}{2gD^5}$$

or, $$\frac{L_1}{D_1^5} = \frac{L_2}{D_2^5}$$

$$\therefore \quad L_2 = L_1\frac{D_2^5}{D_1^5}$$

or, $$L_2 = 1000 \times \left(\frac{40}{20}\right)^5 = 32000 \text{ m}$$

**2.12 (a)**

**For pipes in series:** Discharge is same through each pipe.

**For pipes in parallel:** Head loss is same through each pipe.

**2.13 (c)**

Air vessel is provided at the summit to occasionally expel the air so as to avoid interruption in the flow.

**2.14 (a)**

$$N_S = \frac{N\sqrt{P}}{H^{5/4}}$$

Dimension of specific speed

$$N_S = \frac{\sqrt{ML^2T^{-3}}}{L^{5/4}T} = M^{1/2}L^{-1/4}T^{-3/2}$$

$$= M^{1/2}\,L^{-1/4}\,T^{-5/2}$$

Now, $F = MLT^{-2}$

$\Rightarrow$ $M = FL^{-1}\,T^2$

$\therefore$ $[N_s] = F^{1/2}\,L^{-3/4}\,T^{-3/2}$

**2.15 (b)**

$$\text{Reynolds number} = \frac{\text{Inertia force}}{\text{Viscous force}}$$

$$\text{Froude's number} = \frac{\text{Inertia force}}{\text{Gravity force}}$$

$$\text{Euler's number} = \frac{\text{Inertia force}}{\text{Pressure force}}$$

$$\text{Mach number} = \frac{\text{Inertia force}}{\text{Elastic force}}$$

$$\text{Weber number} = \frac{\text{Inertia force}}{\text{Surface tension force}}$$

**2.16 (b)**

$$\omega = \frac{\Delta\theta}{\Delta T}$$

$$\therefore \quad [w] = \frac{[\Delta\theta]}{[\Delta T]} = \left[T^{-1}\right]$$

■■■■

# 3 Open Channel Flow & Hydraulic Machinery

## Open Channel Flow

3.1 When the flow in an open channel is gradually varied, the flow is said to be
(a) steady uniform flow
(b) steady non-uniform flow
(c) unsteady uniform flow
(d) unsteady non-uniform flow
[SSC : JE : 2011]

3.2 The term 'alternate depth' in an open channel flow refers to the
(a) Depths having the same specific energy for a given discharge
(b) Depths before and after the passage of the surge
(c) Depths having the same kinetic energy for a given discharge
(d) Depths on either side of a hydraulic jump
[SSC - JE : 2012]

3.3 The most economical section of a rectangular channel is one having hydraulic radius equal to
(a) twice the depth (b) half of the breadth
(c) half the depth (d) twice the breadth
[SSC : JE : 2013]

3.4 In a rectangular channel, the ratio of the specific energy at critical depth '$E_c$' to the critical depth '$y_c$' is
(a) 2.0 (b) 1.0
(c) 1.5 (d) 1.25
[SSC : JE : 2013]

3.5 In open channel flows, the characteristic length commonly used in defining the Reynolds number is the
(a) depth of flow (b) wetted perimeter
(c) hydraulic radius (d) area/top width
[SSC : JE : 2013]

3.6 Flow of water through a passage under atmospheric pressure is called
(a) Pipe flow
(b) Uniform flow
(c) Open channel flow
(d) Non-uniform flow
[SSC - JE (Forenoon) : 2014]

3.7 In an open channel flow, the maximum velocity occurs:
(a) just below the free surface
(b) at the surface
(c) near the channel bottom
(d) in the mid-depth of flow
[SSC - JE (Afternoon) : 2014]

3.8 For subcritical flow, the Froude number is :
(a) Not equal to one
(b) Less than one
(c) Greater than one
(d) Equal to one
[SSC - JE (Afternoon) : 2014]

3.9 The relationship between atmospheric pressure ($P_{atm}$), gauge pressure ($P_{gauge}$) and absolute pressure ($P_{abs}$) is given by:
(a) $P_{atm} = P_{abs} + P_{gauge}$
(b) $P_{abs} = P_{atm} + P_{gauge}$
(c) $P_{abs} = P_{atm} - P_{gauge}$
(d) $P_{atm} = P_{abs} + P_{gauge}$
[SSC - JE (Afternoon) : 2014]

## Hydraulic Machinery

3.10 A surge tank is provided in hydropower schemes to
(a) reduce water hammer pressures
(b) reduce frictional losses
(c) increases the net head
(d) strengthen the penstocks
[SSC : JE : 2013]

3.11 Typically, a hydroelectric plant will have following hydraulic machine :
(a) Hydraulic Turbine
(b) Hydraulic Pump
(c) Electric Motor
(d) None of the above
[SSC - JE (Forenoon) : 2014]

3.12 For producing electricity, following combination of machines will be required :
(a) Electric motor + pump
(b) Hydraulic turbine + generator
(c) Hydraulic turbine + electric motor
(d) Generator + pump
[SSC - JE (Afternoon) : 2014]

## Answers Open Channel Flow & Hydraulic Machinery

3.1 (b) 3.2 (a) 3.3 (c) 3.4 (c) 3.5 (c) 3.6 (c) 3.7 (a) 3.8 (b) 3.9 (b)
3.10 (a) 3.11 (a) 3.12 (b)

## Explanations Open Channel Flow & Hydraulic Machinery

3.1 (b)
Gradually varied flow is steady, non-uniform flow in which the depth of flow varies gradually.

3.3 (c)
For most economical rectangular section

$$\text{Depth} = \frac{\text{Breadth}}{2}$$

$$R = \frac{\text{Depth}}{2}$$

3.4 (c)
For a rectangular channel section

$$E_C = \frac{3}{2} y_c$$

3.7 (a)
Maximum velocity in a channel section often occurs below the free surface. It is achieved by velocity distribution equation derived by applying the probability and entropy concepts.

3.8 (b)
If $F_r < 1 \Rightarrow$ Subcritical flow
$F_r = 1 \Rightarrow$ Critical flow
$F_r > 1 \Rightarrow$ Supercritical flow

SSC Junior Engineer

Civil Engineering

Paper-I & Paper-II

# Unit VI

# Irrigation Engineering

## Contents


| Sl. | Topic | Page No. |
|---|---|---|
| 1. | Water Requirement of Crops, Hydraylic Structures, Hydrology and Miscellaneous | 52 |


OOOO

# 1 Water Requirement of Crops, Hydraylic Structures, Hydrology and Miscellaneous

## Water Requirement of Crops

1.1 The discharge capacity required at the outlet to irrigate 2600 ha of sugarcane having a kor depth of 17 cm and a kor period of 30 days is
(a) 2.3 $m^3/s$
(b) 1.71 $m^3/s$
(c) 14.7 $m^3/s$
(d) 0.18 $m^3/s$
[SSC : JE : 2011]

1.2 The water utilizable by plants is available in the form of
(a) gravity water
(b) hygroscopic water
(c) capillary water
(d) chemical water
[SSC : JE : 2013]

1.3 The ratio of the quantity of water stored in the root zone of the crops to the quantity of water actually delivered in the field is known as
(a) water use efficiency
(b) water conveyance efficiency
(c) water application efficiency
(d) water storage efficiency
[SSC - JE (Forenoon) : 2014]

1.4 Irrigation efficiency of an irrigation system is the ratio of
(a) Water reaching the farm to water delivered from the source.
(b) Crop yield to total amount of water used in a field.
(c) Water actually stored in root zone to water delivered to the farm.
(d) Water actually utilised by growing crops to water delivered from the source.
[SSC - JE (Afternoon) : 2014]

## Hydraylics Structures

1.5 Lining of irrigation canals
(a) decreases the waterlogging of an area
(b) increases the waterlogging of an area
(c) does not change the waterlogging of an area
(d) increase evaporation
[SSC : JE : 2011]

1.6 The best alignment for a canal is when it is aligned along
(a) Valley line (b) Stream line
(c) Contour line (d) Ridge line
[SSC - JE : 2012]

1.7 For unlined canals, the freeboard is measured from the
(a) full supply level to top of the bank.
(b) top of the bank to bed of the canal.
(c) full supply level to top of the dowel.
(d) None of the above
[SSC - JE (Forenoon) : 2014]

1.8 For lined canals, the freeboard is measured from the :
(a) full supply level to the top of the lining.
(b) full supply level to the top of the bank.
(c) top of the bank to the top of the limit.
(d) full supply level to the top of the down.
[SSC - JE (Afternoon) : 2014]

## Hydrology and Miscellaneous

1.9 Which of the following is a non-recording raingauge?
(a) Symon's raingauge
(b) Tipping bucket type raingauge
(c) Weighing type raingauge
(d) Floating type raingauge
[SSC : JE : 2011]

1.10 If $D$ is the depth of scour below original bed, then the width of launching apron is generally taken as
(a) 1.5 $D$ (b) 2.5 $D$
(c) 1.2 $D$ (d) 2.0 $D$
[SSC - JE : 2012]

1.11 A river training work is generally required when the river is
(a) aggrading type (b) meandering type
(c) degrading type (d) both (a) and (c)
[SSC : JE : 2013]

## Answers Water Requirement of Crops, Hydraulic Structures, Hydrology and Miscellaneous

1.1 (b) 1.2 (c) 1.3 (c) 1.4 (d) 1.5 (a) 1.6 (d) 1.7 (a) 1.8 (a) 1.9 (a)
1.10 (a) 1.11 (d)

## Explanations Water Requirement of Crops, Hydraulic Structures, Hydrology and Miscellaneous

1.1 (b)

$$\Delta = 8.64\frac{B}{D}$$

$$\therefore \quad D = \frac{8.64B}{\Delta} = \frac{8.64 \times 30}{0.17}$$

$$= 1524.7 \text{ hectare/cumec}$$

$\therefore$ Discharge capacity required

$$= \frac{2600}{1524.7} = 1.71 \text{ m}^3/\text{s}$$

1.2 (c)
Gravity water — Superfluous water
Hygroscopic water — Available water
Capillary water — Water stored due to capillary action

1.3 (c)
Water use efficiency

$$= \frac{\text{Water used consumptively}}{\text{Water delivered in the field}}$$

Water conveyance efficiency

$$= \frac{\text{Water availabe at field}}{\text{Water applied at headwork}}$$

Water application efficiency

$$= \frac{\text{Water stored in root zone}}{\text{Water delivered to the field}}$$

Water storage efficiency

$$= \frac{\text{Actual water stored in root zone}}{\text{Water needed to bring water content upto field capacity}}$$

1.4 (d)
It is defined as the ratio between the amount of water utilized (i.e., used to meet the consumptive use requirement of crop plus that necessary to maintain a favourable salt balance in the crop root zone) to the total volume of water diverted, stored or pumped for irrigation.

1.5 (a)
Lining of canals reduces the seepage of water, thus it decreases the waterlogging of an area. It increases hydraulic efficiency and resistance to erosion.

1.6 (d)
Ridge line canal can be used to apply water on both sides of the canal. Also, no cross-drainage structure is required.

1.7 (a)
Refer clause 4.3 of IS 7112 : 2002

1.8 (a)
Refer clause 8.2 of IS 10430 : 2000
Minimum free board for various canal discharges are:

| Canal discharge (cumec) | Minimum free board (m) |
|---|---|
| > 10 | 0.75 |
| 3 to 10 | 0.6 |
| 1 to 3 | 0.5 |
| < 1 | 0.3 |

SSC Junior Engineer

Civil Engineering

# Unit VII

# Transportation Engineering

## Contents


| Sl. | Topic | Page No. |
|---|---|---|
| 1. | Transportation Engineering | 55 |


OOOO

# 1 Transportation Engineering

## Highway Geometric Design & Planning

1.1 The camber for hill roads in case of bituminous surfacing is adopted as
(a) 2.0% (b) 2.5%
(c) 3.0% (d) 3.5%
[SSC : JE : 2011]

1.2 In highway construction on superelevated curves, the rolling shall proceed from
(a) sides towards the centre
(b) centre towards the sides
(c) lower edge towards the upper edge
(d) upper edge towards the lower edge
[SSC : JE : 2013]

1.3 The ruling minimum radius of the curve for ruling design speed $V$ m/sec, coefficient of friction $f$, acceleration due to gravity g m/sec$^2$ and superelevation $e$ is given by
(a) $V^2/(e-f)g$ (b) $V^2/(f-e)g$
(c) $V^2/(e+f)g$ (d) $V^2/(e+f)2g$
[SSC - JE (Forenoon) : 2014]

1.4 Camber in the road is provided for
(a) counteracting the centrifugal force
(b) effective drainage
(c) having proper sight distance
(d) avoiding overturning
[SSC - JE (Forenoon) : 2014]

1.5 The centrifugal force on a car moving on a horizontal circular curve is proportional to:
(a) $\frac{Wv^2}{(gR)}$ (b) $\frac{Wv}{(gR)}$
(c) $\frac{Wv^2}{(gR^2)}$ (d) $\frac{Wv}{(gR^2)}$
[SSC - JE (Afternoon) : 2014]

## Traffic Engineering

1.6 If the stopping distance and average length of a vehicle are 18 m and 6 m respectively, then the theoretical maximum capacity (vehicles per hour) on a traffic lane at a speed of 10 m/sec is
(a) 1500 (b) 2000
(c) 2500 (d) 3000
[SSC : JE : 2013]

1.7 A flyover seggregates traffic with respect to :
(a) direction (b) grade
(c) speed (d) class of vehicle
[SSC - JE (Afternoon) : 2014]

## Highway Materials, Pavement Design and Maintenance

1.8 In CBR test, the value of CBR is calculated at
(a) 2.5 mm penetration only
(b) 5.0 mm penetration only
(c) 7.5 mm penetration only
(d) both 2.5 mm and 5.0 mm penetrations
[SSC : JE : 2011]

1.9 An aggregate is said to be flaky if its least dimension is less than
(a) $\frac{2}{3}$ × mean dimension
(b) $\frac{3}{4}$ × mean dimension
(c) $\frac{3}{5}$ × mean dimension
(d) $\frac{5}{8}$ × mean dimension
[SSC : JE : 2011, (Forenoon) : 2014]

1.10 When the bituminous surfacing is done on already existing black top road or over existing

cement concrete road, the type of treatment to be given is

(a) Tack coat (b) Spray of emulsion
(c) Seal coat (d) Prime coat

[SSC - JE : 2012]

1.11 Bottommost layer of pavement is known as

(a) Sub base course (b) Sub grade
(c) Wearing course (d) Base course

[SSC - JE : 2012]

1.12 Los Angles test for aggregates is done to determine the

(a) Abrasion resistance
(b) Water absorption
(c) Crushing strength
(d) Impact strength

[SSC - JE : 2012]

1.13 The resistance of an aggregate to wear is known as

(a) impact value
(b) abrasion resistance
(c) shear resistance
(d) crushing resistance

[SSC - JE (Forenoon) : 2014]

1.14 For constructing road pavements, the type of cement generally used is

(a) ordinary Portland cement
(b) rapid hardening cement
(c) low heat cement
(d) blast furnace slag cement

[SSC - JE (Forenoon) : 2014]

1.15 The specific gravity of bitumen is

(a) 2.09 (b) 0.8
(c) 0.9 (d) 1.09

[SSC - JE (Afternoon) : 2014]

## Railways

1.16 Minimum depth of ballast cushion for a broad gauge wooden sleeper of size 275 × 25 × 13 cm with 75 cm sleeper spacing is

(a) 15 cm (b) 20 cm
(c) 25 cm (d) 30 cm

[SSC : JE : 2011]

1.17 When $R$ is the radius of the curve (in meters), $D$ is the degree of curve (in degrees) and length of the chord is 30 m, then the relation between $R$ and $D$ is :

(a) $R = 5400/D$ (b) $R = 1520/D$
(c) $R = 1720/D$ (d) $R = 4500/D$

[SSC - JE (Afternoon) : 2014]

■■■■

## Answers Transportation Engineering

1.1 (b) 1.2 (c) 1.3 (c) 1.4 (b) 1.5 (a) 1.6 (a) 1.7 (b) 1.8 (d) 1.9 (c)

1.10 (a) 1.11 (b) 1.12 (a) 1.13 (b) 1.14 (b) 1.15 (d) 1.16 (c) 1.17 (c)

## Explanations Transportation Engineering

**1.1 (b)**

Range of camber for thin bitumen surface in hilly area

$$= 1 \text{ in } 40 \text{ i.e., } \left(\frac{1}{40} \times 100 = 2.5\%\right)$$

**1.2 (c)**

In highways (without superelevation) rolling starts from sides and proceeds to centre.

**1.3 (c)**

$$e + f = \frac{V^2}{gR}$$

$$\therefore \quad R = \frac{V^2}{(e+f)g}$$

**1.5 (a)**

$$\text{Centrifugal force} = \frac{mV^2}{R} = \frac{W}{g} \cdot \frac{V^2}{R}$$

**1.6 (a)**

Time headway,

$$H_t = \frac{18+6}{10} = 2.4 \text{ sec}$$

$\therefore$ Theoretical maximum capacity

$$= \frac{3600}{H_t} = \frac{3600}{2.4} = 1500 \text{ veh/hour}$$

1.7 (b)

A flyover or overpass (also called as road over bridge, ROB) is a grade separated intersection that eliminates crossing conflicts at intersections by vertical separation of roadways.

1.8 (d)

Generally, the CBR value at 2.5 mm penetration will be greater than that at 5 mm penetration and in such a case the former shall be taken as the CBR value for design purposes. If the CBR value corresponding to a penetration of 5 mm exceeds that for 2.5 mm the test shall be repeated. If identical results follow, the CBR corresponding to 5 mm penetration shall be taken for design.

**1.9 (c)**

For flaky aggregates,

Least dimension < 0.6 × mean dimension

**1.10 (a)**

A tack coat is applied over an existing pavement surface to form an adhesive bond between the tack coat and the next layer of coating.

**1.11 (b)**

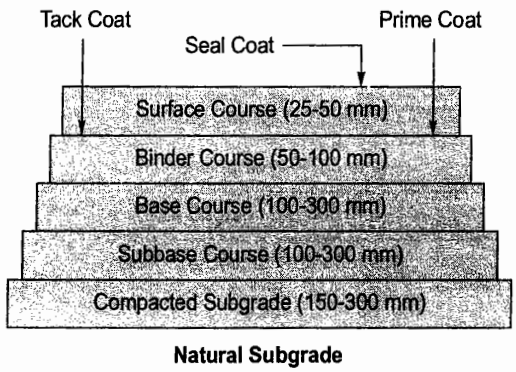


Typical cross section of a pavement.

1.14 (b)

Rapid hardening cement is used to open the road for traffic within a short time.

1.16 (c)

Minimum depth of ballast

$$= \frac{\text{Clear distance between consecutive sleeper}}{2}$$

$$= \frac{75-25}{2} = 25 \text{ cm}$$

1.17 (c)

$$R = \frac{1750}{D} \text{m}$$

Nearest answer is (c).

■■■■

SSC Junior Engineer

Civil Engineering

Paper-I Objective

# Unit VIII

# Environmental Engineering

## Contents


| Sl. | Topic | Page No. |
|---|---|---|
| 1. | Water Demand and Population Projection | 59 |
| 2. | Quality Control of Water Supply and Water Treatment | 60 |
| 3. | Design of Sewer, Quality and Characteristics of Sewage | 61 |
| 4. | Treatment and Disposing of Sewage | 62 |
| 5. | Air and Sound Pollution | 63 |


OOOO

# 1 Water Demand and Population Projection

**1.1** The population of a town as per census records were 2,00,000; 2,10,000 and 2,30,000 for the year 1981, 1991 and 2001 respectively. Find the population of the town in the year 2011 using arithmetic mean method.

(a) 250000 (b) 255000
(c) 240000 (d) 245000

**[SSC - JE : 2012]**

**1.2** The population of a town as per census records were 200000, 210000 and 230000 for the years 1981, 1991 and 2001 respectively. The population of the town as per geometric mean method in the year 2011 is

(a) 244872 (b) 245872
(c) 246820 (d) None of the above

**[SSC : JE : 2013]**

## Answers Water Demand and Population Projection

1.1 (d) 1.2 (b)

## Explanations Water Demand and Population Projection

**1.1 (d)**

| Year | Population | Increment |
|---|---|---|
| 1981 | 200000 | — |
| 1991 | 210000 | 10000 |
| 2001 | 230000 | 20000 |

$$\text{Average increment} = \frac{10000 + 20000}{2} = 15000$$

Population in 2011 = 230000 + 15000 = 245000

**1.2 (b)**

| Year | Population | Increment | Growth rate per decade |
|---|---|---|---|
| 1981 | 200000 | — | — |
| 1991 | 210000 | 10000 | $\frac{10000}{200000} \times 100 = 5\%$ |
| 2001 | 230000 | 20000 | $\frac{20000}{210000} \times 100 = 9.5\%$ |

Geometric mean of growth rate,

$$I = (0.05 \times 0.095)^{1/2}$$
$$= 0.069 \text{ or } 6.9\%$$

$\therefore$ Population in year 2011

$$= 230000 \times (1 + 0.069)^1$$
$$= 245870$$

# 2 Quality Control of Water Supply and Water Treatment

2.1 Hardness of water is caused by the presence of the following in water:
(a) Chlorides and sulphate
(b) Calcium and magnesium
(c) Nitrites and nitrates
(d) Sodium and potassium
[SSC : JE : 2011]

2.2 The product of $H^+$ ions and $OH^-$ ions in a strong alkali at 25°C is
(a) 0 (b) 1
(c) $10^{-1}$ (d) $10^{-14}$
[SSC : JE : 2011]

2.3 The permissible limit of arsenic in drinking water as per the guidelines of WHO is
(a) 0.01 ppm (b) 0.05 ppm
(c) 001 ppm (d) 0.005 ppm
[SSC : JE : 2013]

2.4 Which one of the following sequences is the most suitable for treating raw surface water to make it suitable for drinking purpose?
(a) Screening → filtration → sedimentation → disinfection
(b) Screening → disinfection → sedimentation → filtration
(c) Screening → sedimentation → disinfection → filtration
(d) Screening → sedimentation → filtration → disinfection
[SSC : JE : 2013]

■■■■

## Answers Quality Control of Water Supply and Water Treatment

2.1 (b) 2.2 (d) 2.3 (a) 2.4 (d)

## Explanations Quality Control of Water Supply and Water Treatment

2.1 (b)
Hardness of water is caused by the presence of multivalent cations.

2.2 (d)
$k_w = [H^+][OH^-] = 10^{-14}$ at 25°C

2.3 (a)
Permissible limit of arsenic = 0.01 mg/l
WHO's provisional guideline value for arsenic in drinking water = 0.01 mg/l (10 mg/l)
(Source: guidelines for drinking water quality, 4th edition, WHO, 2011). Permissible limit of arsenic in India in absence of an alternative source = 0.05 mg/l (50 mg/l).
(Source: Indian Standards for Drinking Water, second revision of IS 10500, 2004)

2.4 (d)
Screening → Sedimentation → Filtration → Disinfection

■■■■

# 3 Design of Sewer, Quality and Characteristics of Sewage

**3.1** The correct graphical representation of BOD(Y) and time ($t$) is given by

(a) 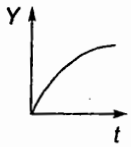


(b) 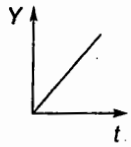


(c) 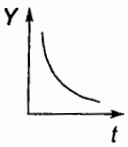


(d) 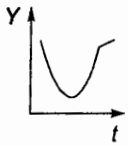


[SSC - JE : 2012]

**3.2** The standard 5-day BOD at 20°C, when compared to ultimate BOD is about

(a) 60% (b) 68%
(c) 80% (d) 90%

[SSC - JE (Forenoon) : 2014]

**3.3** BOD test is conducted at a temperature of

(a) Ambient temperature
(b) 15 °C
(c) 20 °C
(d) 27 °C

[SSC - JE (Afternoon) : 2014]

■■■■

## Answers Design of Sewer, Quality and Characteristics of Sewage

**3.1 (a) 3.2 (b) 3.3 (c)**

# 4 Treatment and Disposing of Sewage

**4.1** The minimum dissolved oxygen which should always be present in water in order to save the aquatic life is
(a) 1 ppm (b) 4 ppm
(c) 10 ppm (d) 40 ppm
**[SSC : JE : 2011]**

**4.2** The most suitable solid waste disposal method for rural areas is
(a) Land filling (b) Deep well injection
(c) Composting (d) Incineration
**[SSC - JE : 2012]**

**4.3** Anti-siphonage pipe is connected to
(a) Main soil pipe
(b) Bottom of *P* trap W.C.
(c) Top of P trap W.C.
(d) Side of water closed
**[SSC : JE : 2013]**

**4.4** The main gas liberated from an anaerobic sludge digestor is :
(a) $NH_3$ (b) CO
(c) $CO_2$ (d) $CH_4$
**[SSC - JE (Afternoon) : 2014]**

## Answers Treatment and Disposing of Sewage

**4.1 (b) 4.2 (c) 4.3 (b) 4.4 (d)**

## Explanations Treatment and Disposing of Sewage

**4.1 (b)**
Minimum DO to save aquatic life = 4 mg/*l*.

**4.2 (c)**
Composting is nature's process of recycling decomposed organic materials into a rich soil known as compost. Anything that was once living will decompose. Finished compost looks like soil –dark brown, crumbly and smells like a forest floor.

**4.3 (b)**

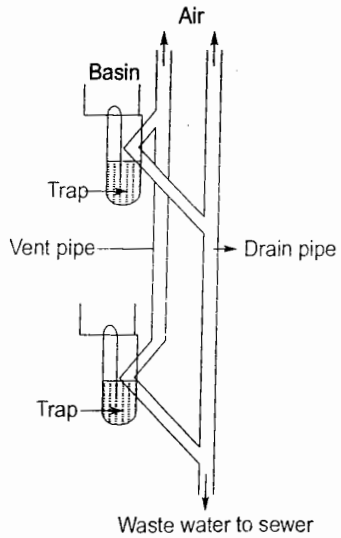

Fig. Anti-siphonage pipes

4.4 (d)
Main gas liberated from an anaerobic sludge digestor are $CH_4$ and $NH_3$. But the amount of $CH_4$ liberated in more than $NH_3$.

# 5 Air and Sound Pollution

5.1 The global warming is caused mainly by

(a) $NO_x$ (b) $SO_x$ (c) $CO_2$ (d) $O_2$

[SSC - JE (Forenoon) : 2014]

## Answers Air and Sound Pollution

5.1 (c)

## Explanations Air and Sound Pollution

5.1 (c)

Global warming potential of various gases are:

$CFC > NO_x > CH_4 > CO_2$

But the amount of $CO_2$ released in atmosphere is much more as compared to other gases which makes it a leading source of global warming.

Unit IX

# Theory of Structures

## Contents


| Sl. | Topic | Page No. |
|---|---|---|
| 1. | Properties of Metals, Stress & Strain | 65 |
| 2. | Shear Force and Bending Moment | 69 |
| 3. | Principal Stress and Principal Strain | 73 |
| 4. | Bending and Shear Stresses | 74 |
| 5. | Deflection of Beams | 77 |
| 6. | Torsion of Shafts and Pressure Vessels | 79 |
| 7. | Theory of Columns and Shear Centre | 80 |
| 8. | Miscellaneous | 82 |


OOOO

# 1 Properties of Metals, Stress & Strain

1.1 The ratio of normal stress to volumetric strain in defined as
(a) Young's modulus (b) Bulk modulus
(c) Rigidity modulus (d) Tangent modulus
[SSC : JE : 2011]

1.2 A material is called ductile if it
(a) has little plastic elongation range
(b) has long plastic elongation range
(c) could be hammered into a very thin sheet
(d) shows large elastic strain
[SSC : JE : 2011]

1.3 The moment of inertia of the cross-section about X-X axis is

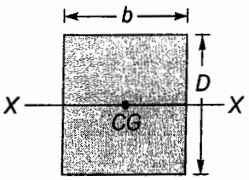


(a) $D^3b/3$ (b) $D^3b/12$
(c) $Db^3/3$ (d) $Db^3/12$
[SSC : JE : 2011]

1.4 Poisson's ratio is defined as
(a) longitudinal strain/lateral strain
(b) lateral strain/longitudinal strain
(c) lateral strain × longitudinal strain
(d) $\frac{1}{2}$ (lateral strain) × (longitudinal strain)
[SSC : JE : 2011]

1.5 Modulus of rigidity is expressed as
(a) compressive stress/compressive strain
(b) tensile stress/tensile strain
(c) shear stress/shear strain
(d) stress/volumetric strain
[SSC : JE : 2011]

1.6 Hooke's law is valid up to
(a) Limit of proportionality
(b) Ultimate point
(c) Elastic limit
(d) Yield point
[SSC - JE : 2012]

1.7 The ability of a material to absorb energy till the elastic limit is known as
(a) Resilience (b) Ductility
(c) Elasticity (d) Malleability
[SSC - JE : 2012]

1.8 Out of the following, which is least elastic ?
(a) Silver (b) Rubber
(c) Iron (d) Copper
[SSC - JE : 2012]

1.9 A bar, $L$ metre long and having its area of cross-section $A$, is subjected to gradually applied tensile load $W$. The strain energy stored in the bar is given by
(a) $\frac{W^2L}{AE}$ (b) $\frac{W^2L}{2AE}$
(c) $\frac{WL}{2AE}$ (d) $\frac{WL}{AE}$
[SSC - JE : 2012]

1.10 The predominant effect of an axial tensile force on a helical spring is
(a) Compression (b) Twisting
(c) Bending (d) Tension
[SSC - JE : 2012]

1.11 Strain energy per unit volume of a solid circular shaft under axial tension is
(a) $\frac{\sigma^2}{8E}$ (b) $\frac{\sigma^2}{16E}$
(c) $\frac{\sigma^2}{2E}$ (d) $\frac{\sigma^2}{4E}$
[SSC - JE : 2012]

1.12 For a beam carrying a uniformly distributed load, the strain energy will be maximum in case the beam is
(a) Propped cantilever
(b) Fixed at both ends
(c) Cantilever
(d) Simply supported
[SSC - JE : 2012]

1.13 From a circular plate of diameter 6.0 cm, a circle is cut out whose diameter is a radius of the plate. The distance of centre fo gravity of the remainder from the centre of circular plate is
(a) 5.0 cm (b) 1.5 cm
(c) 1.0 cm (d) 0.5 cm
[SSC : JE : 2013]

1.14 The ability of a material to absorb energy till the breaking or rupture takes place is known as
(a) Hardness (b) Toughness
(c) Brittleness (d) Softness
[SSC : JE : 2013]

1.15 Poisson's ratio ($\mu$) is defined as the ratio of
(a) axial strain to transverse strain
(b) axial strain to shear strain
(c) transverse strain to axial strain
(d) shear strain to axial strain
[SSC : JE : 2013, JE (Forenoon) : 2014]

1.16 Strain energy due to axial deformation is given by where
$\sigma$ = resultant stress
$P$ = axial load
$\Delta$ = deformation
$E$ = modulus of elasticity
(a) $\sigma\varepsilon$ (b) $P\Delta$
(c) $\frac{\sigma^2}{2E}$ (d) $\frac{1}{2}P\Delta$
[SSC - JE (Forenoon) : 2014]

1.17 A linear force-deformation relation is obtained in materials
(a) having elastic stress-strain property
(b) having plastic stress-strain property
(c) following Hooke's law
(d) which are rigid elastic materials
[SSC - JE (Forenoon) : 2014]

1.18 The property of a material by which it can be beaten or rolled into plates, is called
(a) malleability (b) ductility
(c) plasticity (d) elasticity
[SSC - JE (Forenoon) : 2014]

1.19 The property of a material by which it gets permanent deformation under a load which is not recovered after removal of load is called
(a) elasticity (b) brittleness
(c) ductillity (d) plasticity
[SSC - JE (Afternoon) : 2014]

1.20 Strain energy due to sudden axial load is given by:
$\sigma$ : resultant stress
$P$ : Axial load
$\Delta$ : detornator
$\epsilon$ : strain
$E$ : modulous of elasticity
(a) $\frac{1}{2}P\Delta$ (b) $\sigma.\varepsilon$
(c) $P\Delta$ (d) $\frac{\sigma^2}{2E}$
[SSC - JE (Afternoon) : 2014]

1.21 The ratio of normal stress to normal strain within elastic limits is called :
(a) Young's modulus (b) Shear modulus
(c) Poisson's ratio (d) Bulk modulus
[SSC - JE (Afternoon) : 2014]

■■■■

## Answers Properties of Metals, Stress & Strain

1.1 (b) 1.2 (b) 1.3 (b) 1.4 (b) 1.5 (c) 1.6 (a) 1.7 (a) 1.8 (b) 1.9 (b)
1.10 (b) 1.11 (c) 1.12 (c) 1.13 (d) 1.14 (b) 1.15 (c) 1.16 (d) 1.17 (d) 1.18 (c)
1.19 (d) 1.20 (d) 1.21 (a)

## Explanations Properties of Metals, Stress & Strain

**1.1 (b)**

$$\text{Young's modulus} = \frac{\text{Tensile stress}}{\text{Tensile strain}}$$

$$\text{Rigidity modulus} = \frac{\text{Shear stress}}{\text{Shear strain}}$$

Tangent modulus = Slope of the stress-strain curve at any specified stress or strain.

**1.2 (b)**

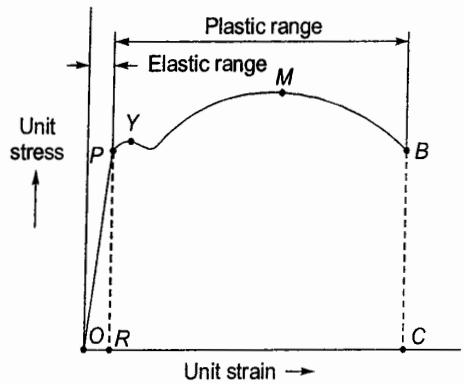


Stress-strain diagram for a Ductile Material

**1.4 (b)**

Poisson's ratio,

$$\mu = \frac{\text{Unit lateral contraction}}{\text{Unit axial elongation}}$$

**1.5 (c)**

The shear modulus is concerned with the deformation of a solid when it experiences a force parallel to one of its surfaces while its opposite face experiences an opposing force (such as friction.)

**1.6 (a)**

Limit of proportionality.

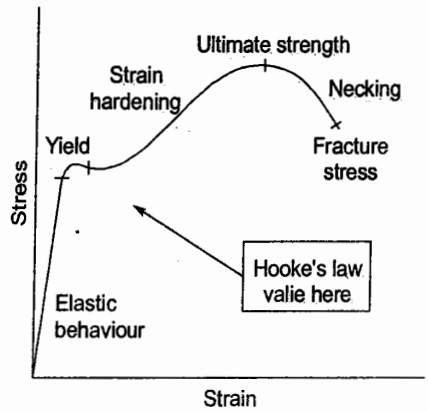


**1.7 (a)**

$$\text{Resilience} = \text{Area under } P\text{-}\delta \text{ curve} = \frac{1}{2} \times P \times \delta$$

**1.8 (b)**

Elasticity is measured as ratio of stress to strain. For a given stress, strain is much smaller in steel than in rubber.

**1.9 (b)**

$$\text{Strain energy stored} = \frac{1}{2} P \times \delta$$

$$= \frac{1}{2} \times W \times \frac{WL}{AE}$$

$$= \frac{W^2 L}{2AE}$$

**1.10 (b)**

A spring may be defined as an elastic member whose primary function is to deflect or distort under the action of applied load and it recovers its original shape when load is released. A helical spring is made of wire coiled into a helical form, the load being applied along the axis of the helix.

For a simply supported beam shown in figure, the magnitude of vertical reaction at '*B*' is

(a) 20 kN (b) 18 kN
(c) 15 kN (d) 10 kN

[SSC - JE (Forenoon) : 2014]

2.10 In a cantilever beam subjected to general loading, the maximum bending moment is at

(a) fixed end (b) free end
(c) mid-span (d) quarter-span

[SSC - JE (Forenoon) : 2014]

2.11

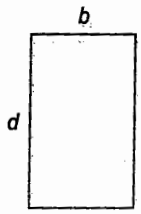


Moment of inertia of rectangular section as shown in figure about its horizontal centroidal axis is

(a) $\frac{db^3}{12}$ (b) $\frac{db^3}{3}$

(c) $\frac{bd^3}{12}$ (d) $\frac{bd^3}{3}$

[SSC - JE (Forenoon) : 2014]

2.12

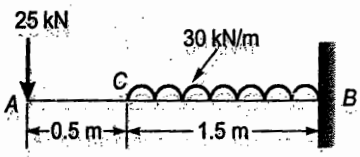


For the cantilever beam as shown in figure, the value of shear force at fixed end is :

(a) 100 kN (b) 70 kN
(c) 80 kN (d) 90 kN

[SSC - JE (Afternoon) : 2014]

2.13 In a simply supported beam of span, *L* subjected to uniformly distributed load (UDL) of intensity *w* kN/m over it's entire length the maximum bending is given by the expression:

(a) $\frac{wL^2}{8}$ (b) $\frac{wL}{2}$

(c) $\frac{wL^2}{2}$ (d) $wL$

[SSC - JE (Afternoon) : 2014]

2.14 The shape of bending moment diagram in a beam subjected to only uniformly distributed load (UDL) is :

(a) Constant (b) Cubic parabola
(c) Parabola (d) Triangular

[SSC - JE (Afternoon) : 2014]

■■■■

## Answers Shear Force and Bending Moment

2.1 (d) 2.2 (d) 2.3 (b) 2.4 (c) 2.5 (c) 2.6 (b) 2.7 (d) 2.8 (a) 2.9 (d)
2.10 (a) 2.11 (c) 2.12 (b) 2.13 (a) 2.14 (c)

## Explanations Shear Force and Bending Moment

**2.1 (d)**

At point of contraflexure no bending occurs i.e., bending moment changes its sign.

**2.2 (d)**

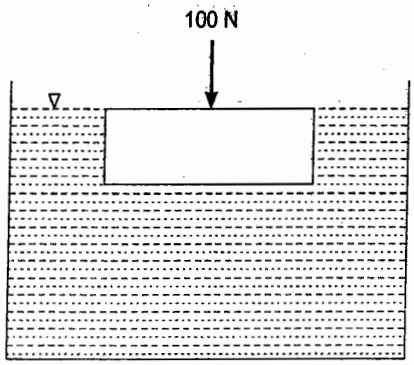


Water will provide uniform reaction throughout the log.

Thus, maximum shear force will occur at the centre

and its value = $\frac{100}{2} = 50$ N

**2.3 (b)**

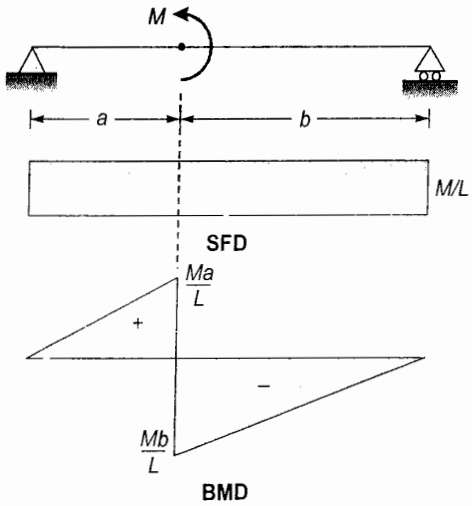


Reaction at support = $\frac{M}{L}$

From SFD, shear force at point of contraflexure

$= \frac{M}{L}$

**2.4 (c)**

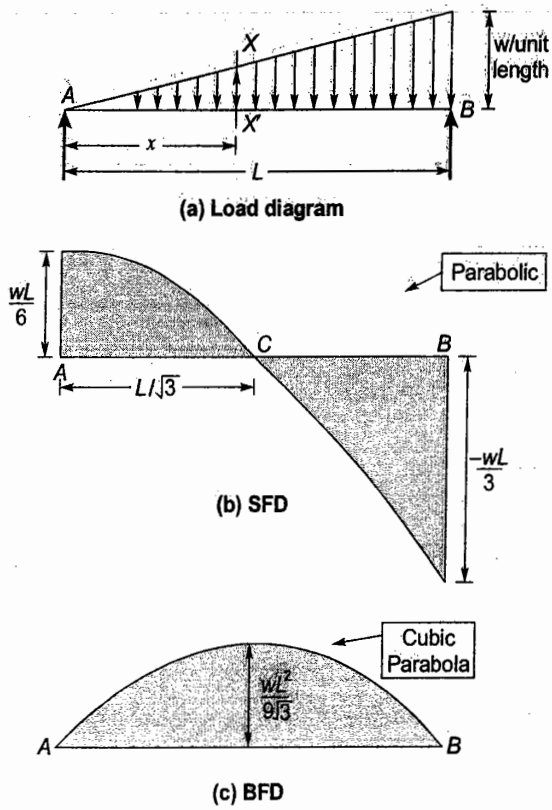


**2.5 (c)**

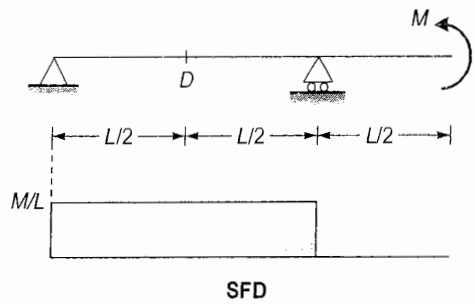


$$R_A = R_B = \frac{M}{L}$$

From SFD:

SF at $D = \frac{M}{L}$

2.6 (b)

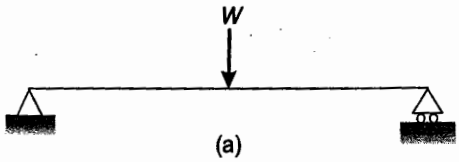


Mid span moment = $\frac{WL}{4}$

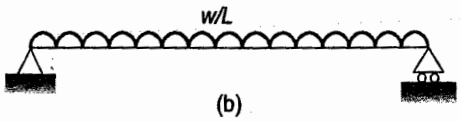


Mid span moment = $\frac{WL}{8}$

∴ Ratio of mid span moment in *a* and *b* = 2.

2.7 (d)

$\frac{4EI}{L}$ For a beam with far end fixed.

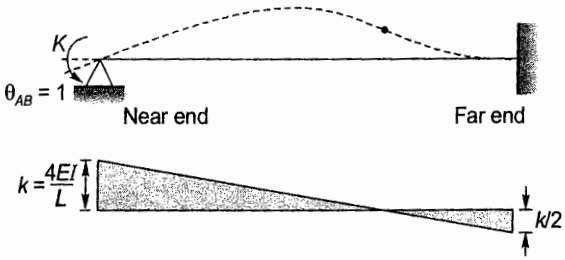


2.8 (a)

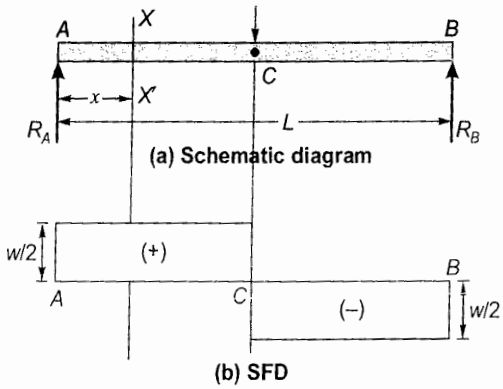


2.9 (d)

$$R_B = \frac{30 \times 1}{3} = 10 \text{ kN}$$

2.12 (b)

Shear force at fixed end

= 25 + 30 × 1.5 = 70 kN

2.14 (c)

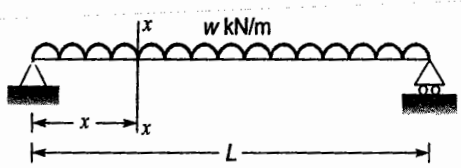


Reaction at both ends = $\frac{wL}{2}$

∴ Bending moment at anysection $x$-$x$ distance $x$ from left hand support is,

$$BM_x = \frac{wL}{2}x - wx \times \frac{x}{2}$$

or, $$BM_x = \frac{wL}{2}x - \frac{wx^2}{2}$$

Clearly, $BM_x$ is a quadratic function of $x$ whose shape is a parabola.

■■■■

# 3 Principal Stress and Principal Strain

3.1 In a Mohr's circle of $\sigma - \tau$ plane ($\sigma$ = normal stress, $\tau$ = shear stress), the vertical radius represents

(a) Maximum shear stress
(b) Maximum normal stress
(c) Principal stress
(d) Minimum normal stress

[SSC : JE : 2013]

## Answers Principal Stress and Principal Strain

3.1 (a)

## Explanations Principal Stress and Principal Strain

3.1 (a)

Maximum shear stress

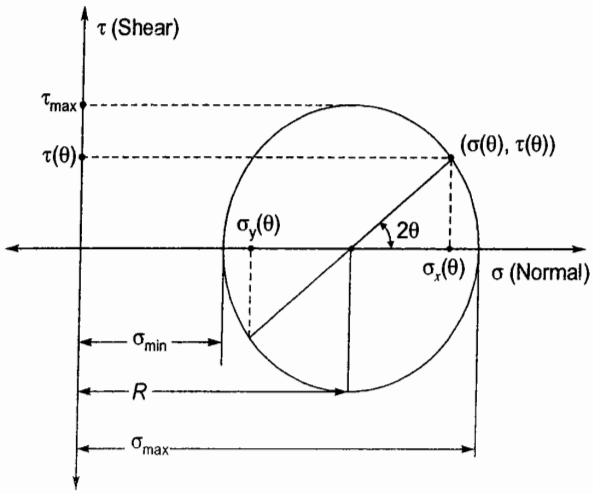

# 4 Bending and Shear Stresses

**4.1** The ratio of flexural rigidity of a beam ($b \times d$) to another one ($b \times 2d$) of similar material will be

(a) $\frac{1}{2}$ (b) $\frac{1}{4}$

(c) $\frac{1}{8}$ (d) $\frac{1}{18}$

[SSC : JE : 2011]

**4.2** For a rectangular beam, the maximum shear stress is related to average shear stress, $\tau_{av}$, by

(a) $\tau_{av}$ (b) $0.25\,\tau_{av}$

(c) $1.50\,\tau_{av}$ (d) $1.75\,\tau_{av}$

[SSC : JE : 2011]

**4.3** Shear stress at distance '$y$' above neutral axis (NA) on a prismatic beam due to shear force $V$ is given by

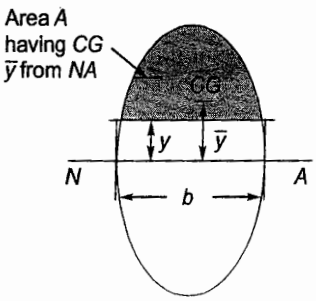


(a) $\frac{VA\bar{y}}{(Ib)}$ (b) $\frac{VI}{(bA\bar{y})}$

(c) $\frac{VA\bar{y}b}{I}$ (d) $\frac{Vb}{(A\bar{y}I)}$

[SSC - JE : 2012]

**4.4** For a given shear force across a symmetrical '$I$' section, the intensity of shear stress is maximum at the

(a) At the junction of the flange and the web, but on the web

(b) At the junction of the flange and the web, but on the flange

(c) Extreme fibre

(d) Centroid of the section

[SSC - JE : 2012]

**4.5** For a given stress, the ratio of moment of resistance of a beam of square cross-section when placed with its two sides horizontal to the moment of resistance with its one of the diagonal horizontal is given by

(a) $\frac{1}{\sqrt{2}}$ (b) $\sqrt{2}$

(c) $\frac{1}{2}$ (d) 1

[SSC - JE : 2012]

**4.6** Two beams, one of circular cross-section and the other of square cross section, have equal areas of cross section. If subjected to bending, then

(a) Both sections are equally economical

(b) Both sections are equally stiff

(c) Circular cross section is more economical

(d) Square cross section is more economical

[SSC - JE : 2012]

**4.7** In a beam at a section carrying a shear force $F$, the shear stress is maximum at

(a) Bottommost fibre (b) Mid depth

(c) Neutral surface (d) Topmost fibre

[SSC - JE : 2012]

**4.8** A beam fixed at both the ends carries a uniformly distributed load on entire length. The ratio of bending moment at the support to the bending moment at mid span is given by

(a) 0.5 (b) 1.0

(c) 1.5 (d) 2.0

[SSC : JE : 2013]

**4.9** In case of biaxial stress, the maximum value of shear stress is given by

(a) difference of the normal stresses
(b) half the difference of the normal stresses
(c) sum of the normal stresses
(d) half of the sum of the normal stresses

[SSC : JE : 2013]

**4.10** In a section undergoing bending, the neutral surface is subjected to
(a) compression strain (b) tensile strain
(c) zero strain (d) None of the above

[SSC : JE : 2013]

**4.11** The maximum dimension of the core section for a rectangular cross-section under eccentric loading on a column ($b \times d$) is
(a) $b/6$ (b) $d/6$
(c) $d/8$ (d) $b/3$ and $d/3$

[SSC : JE : 2013]

**4.12** The shear force diagram for a cantilever beam subjected to a concentrated load at the free end is given by a/an.
(a) Triangle (b) Rectangle
(c) Parabola (d) Ellipse

[SSC : JE : 2013]

**4.13** Of the several prismatic beams of equal lengths and of same material, the beam that can carry maximum load in flexure is the one having maximum
(a) Depth of section (b) Area of cross-section
(c) Section modulus (d) Moment of inertia

[SSC : JE : 2013]

**4.14** A structure which offers negligible or zero resistance on bending at any point is known as
(a) Beam (b) Girder
(c) Lintel (d) Cable

[SSC : JE : 2013]

**4.15** The curvature at any point $\left(\frac{1}{R}\right)$ along the curve representing the deformed shape of a beam is given by

(a) $\pm(dy/dx)/\left[1+\frac{d^2y}{dx^2}\right]^{1/2}$

(b) $\pm(d^2y/dx^2)/\left[1+\left(\frac{dy}{dx}\right)^2\right]^{3/2}$

(c) $\pm(d^2y/dx^2)/\left[1+\frac{d^2y}{dx^2}\right]^{1/2}$

(d) $\pm(dy/dx)/\left[1+\frac{d^2y}{dx^2}\right]^{2}$

[SSC : JE : 2013]

■■■■

## Answers Bending and Shear Stresses

4.1 (c) 4.2 (c) 4.3 (a) 4.4 (d) 4.5 (b) 4.6 (d) 4.7 (c) 4.8 (d) 4.9 (b)
4.10 (c) 4.11 (d) 4.12 (b) 4.13 (c) 4.14 (d) 4.15 (b)

## Explanations Bending and Shear Stresses

4.1 (c)
Flexural rigidity = $EI$

But $I = \frac{bd^3}{12}$

$$\therefore \quad \frac{I(b\times d)}{I(b\times 2d)} = \frac{bd^3}{b(2d)^3} = \frac{1}{8}$$

4.4 (d)
Shear stress distribution for an I-section is:

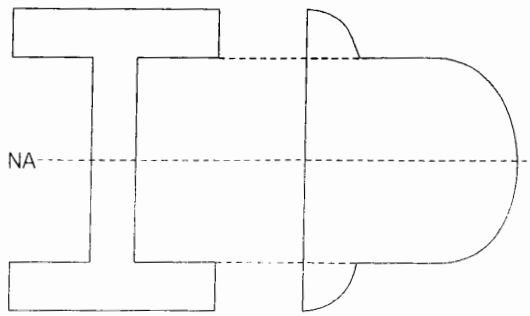

**4.5 (b)**

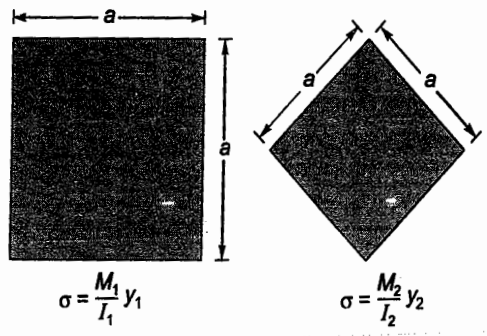


Here, $I_1 = I_2 = \frac{a^4}{12}$

$$y_1 = \frac{a}{2}, \; y_2 = \frac{\sqrt{2}a}{2}$$

$$\therefore \quad \frac{M_1}{M_2} = \frac{y_2}{y_1} = \frac{\sqrt{2}a}{2 \times \frac{a}{2}}$$

or $$\frac{M_1}{M_2} = \sqrt{2}$$

**4.6 (d)**

Section modulus ($Z$) of square cross-section is more than circular cross-section.

**4.7 (c)**

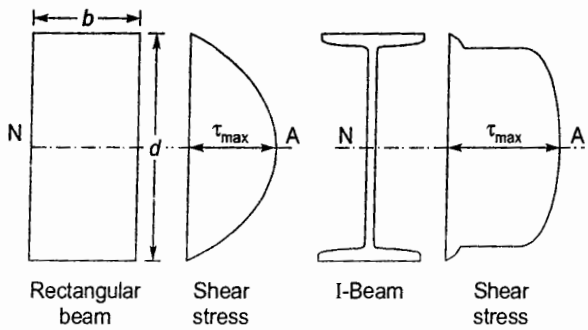


**4.8 (d)**

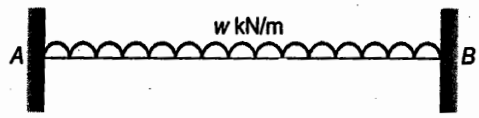


$$M_A = M_B = \frac{wL^2}{12}$$

Mid-span moment $= \frac{wL^2}{24}$

$$\therefore \quad \frac{\text{BM at support}}{\text{BM at mid-span}} = \frac{wL^2/12}{wL^2/24} = 2$$

**4.9 (b)**

$$\gamma_{max} = \frac{\sigma_1 - \sigma_3}{2}$$

**4.13 (c)**

Section modulus $(Z) = \frac{I}{y}$

$$M = \sigma Z$$

**4.14 (d)**

In cables any resistance offered to bending is negiligible. Tensile force acting in the cable is always tangent to the cable at points along its length.

■■■■

# 5 Deflection of Beams

**5.1** The deflection of a beam may be reduced by
(a) increasing depth of the section
(b) increasing degree of end restraint
(c) increasing width of the section
(d) any one or all of the above

**[SSC : JE : 2011]**

**5.2** Slope at the support of a simply supported beam of effective span $L$ with a central point load $W$ is given by

(a) $\frac{WL^2}{16EI}$ (b) $\frac{WL^2}{24EI}$

(c) $\frac{WL^2}{8EI}$ (d) $\frac{WL^2}{12EI}$

**[SSC - JE : 2012]**

**5.3** Point out the correct matching :
(a) Cantilever beam under point load at tip $(W) - \frac{WL^3}{48EI}$
(b) Cantilever beam under UDL $(w) - \frac{wL^3}{8EI}$
(c) Simply supported beam under central point load $(W) - \frac{wL^3}{484EI}$
(d) Simply supported beam under udl $(w) - \frac{3wL^4}{384EI}$

[SSC - JE : 2012]

**5.4** For a cantilever beam of length $L$ carrying a triangular load of intensity '$w$' at the support and zero at the free end, the slope of the free end is given by

(a) $\frac{wL^3}{24EI}$ (b) $\frac{wL^3}{48EI}$

(c) $\frac{wL^3}{8EI}$ (d) $\frac{wL^3}{12EI}$

**[SSC - JE : 2012]**

**5.5** Deflection of the free end of a cantilever beam having a concentrated load $W$ at mid span is given by
(a) $WL^3/3\,EI$ (b) $5\,WL^3/24\,EI$
(c) $5\,WL^3/48\,EI$ (d) $WL^3/48\,EI$

**[SSC : JE : 2013]**

**5.6** The maximum deflection of a simply supported beam of effective span $L$ and subjected to a central concentrated load $W$ is given is
(a) $WL^3/8\,EI$ (b) $WL^3/48\,EI$
(c) $5\,WL^3/48\,EI$ (d) $WL^3/84\,EI$

[SSC : JE : 2013]

**5.7** A concentrated load $W$ acts at the centre of a simply supported beam of length $L$. If the total load '$W$ is changed to a uniformly distributed load over the entire span, then the ratio of maximum deflection under concentrated load to maximum mid-span moment will be
(a) 1.2 (b) 1.3
(c) 1/4 (d) 8/5

[SSC : JE : 2013]

## Answers Deflection of Beams

5.1 (d) 5.2 (a) 5.3 (c) 5.4 (a) 5.5 (c) 5.6 (b) 5.7 (d)

## Explanations Deflection of Beams

**5.1 (d)**

Deflection for SSB carrying UDL is given by

$$\delta = \frac{5}{384}\frac{WL^4}{EI}$$

∴ Deflection can be decreased by

(i) Increasing $I$

(ii) Increasing degree of end restraint.

**5.4 (a)**

$$\theta = \frac{wL^3}{24EI}$$

$$\delta_{max} = \frac{wL^4}{30EI}$$

**5.5 (c)**

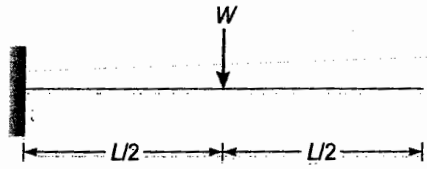


$$\delta = \frac{W}{3EI}\left(\frac{L}{2}\right)^3 + \frac{W}{2EI}\left(\frac{L}{2}\right)^2 \times \frac{L}{2}$$

$$= \frac{WL^3}{24EI} + \frac{WL^3}{16EI}$$

$$= \frac{5}{48}\frac{WL^3}{EI}$$

**5.7 (d)**

$$\frac{\delta_1}{\delta_2} = \frac{WL^3}{48EI} \times \frac{384EI}{5WL^3} = \frac{8}{5}$$

■■■■

# 6 Torsion of Shafts and Pressure Vessels

**6.1** If a circular shaft is subjected to a torque $T$ and bending moment $M$, then the ratio of maximum bending stress and maximum shear stress is given by

(a) $\frac{M}{T}$ (b) $\frac{2T}{M}$

(c) $\frac{2M}{T}$ (d) $\frac{M}{2T}$

**[SSC - JE : 2012]**

**6.2** The equivalent stiffness of two springs of stiffness $S_1$ and $S_2$ joined in series is given by $S =$

(a) $S_1 S_2/(S_1 + S_2)$ (b) $(S_1 + S_2)/(S_1 S_2)$

(c) $S_1 + S_2$ (d) $S_1 S_2$

**[SSC : JE : 2013]**

**6.3** In a thin cylindrical shell, the ratio of longitudinal stress to hoop stress is

(a) 0.5 (b) 1.0

(c) 1.5 (d) 2.0

**[SSC : JE : 2013]**

**6.4** Angle of twist of a circular shaft under the action of a torsional moment $T$ is given by

(a) GJ/TL (b) TL/GJ

(c) TJ/GL (d) TG/JL

**[SSC : JE : 2013]**

■■■■

## Answers Torsion of Shafts and Pressure Vessels

**6.1 (c) 6.2 (a) 6.3 (a) 6.4 (b)**

## Explanations Torsion of Shafts and Pressure Vessels

**6.1 (c)**

$$\sigma_x = \frac{32M}{\pi d^3}, \quad \tau_{xz} = \frac{16T}{\pi d^3}$$

$$\therefore \frac{\sigma_x}{\tau_{xz}} = \frac{2M}{T}$$

**6.2 (a)**

For springs in series: Equivalent stiffness,

$$S = \frac{S_1 S_2}{S_1 + S_2}$$

For springs in parallel: Equivalent stiffness,

$$S = S_1 + S_2$$

**6.3 (a)**

For a thin cylindrical shell carrying a uniform internal pressure $p$

Longitudinal stress, $\sigma_1 = \frac{pr}{2t}$

Hoop stress, $\sigma_2 = \frac{pr}{t}$

$$\therefore \frac{\sigma_1}{\sigma_2} = \frac{1}{2} = 0.5$$

■■■■

# 7 Theory of Columns and Shear Centre

**7.1** The equivalent length of a column of length $L$ having both ends fixed is given by

(a) $\frac{L}{2}$ (b) $\frac{L}{\sqrt{2}}$

(c) $2L$ (d) $L$

**[SSC - JE : 2012]**

**7.2** The allowable stress in a long column can be increased by increasing the

(a) Slenderness ratio
(b) Length of the column
(c) Radius of gyration
(d) Eccentricity

**[SSC - JE : 2012]**

**7.3** Buckling load for an axially loaded column with both ends fixed is given by

(a) $\pi^2 EI/l^2$ (b) $2\pi^2 EI/l^2$
(c) $4\pi^2 EI/l^2$ (d) $\pi^2 EI/(4l^2)$

**[SSC : JE : 2013]**

**7.4** If '$A$' is the area of cross-section and '$I$' is the moment of inertia of a given plane section, then radius of gyration ($r$) is given by the formula

(a) $r = \frac{I}{A}$ (b) $r = \sqrt{\frac{I}{A}}$

(c) $r = \frac{A}{I}$ (d) $r = \sqrt{\frac{A}{I}}$

[SSC - JE (Forenoon) : 2014]

**7.5** Ratio of length of column to the minimum radius of gyration of the cross-sectional area of the column is known as

(a) Slenderness ratio
(b) Buckling ratio
(c) Crippling ratio
(d) Compressive ratio

**[SSC - JE (Forenoon) : 2014]**

**7.6** The effective slenderness ratio of cantilever column is

(a) $0.5\ L/r$ (b) $L/r$

(c) $\sqrt{2}\ L/r$ (d) $2\ L/r$

**[SSC - JE (Forenoon) : 2014]**

**7.7** The slenderness ratio of a column is zero when its length:

(a) effective length is equal to actual length.
(b) is very large.
(c) is equal to its radius of gyration.
(d) is supported on all sides throughout its length.

**[SSC - JE (Afternoon) : 2014]**

**7.8** A 40 cm diameter circular timber column is 4 m long. The slenderness ratio of the column is

(a) $20\sqrt{2}$ (b) 10

(c) 20 (d) 40

[SSC - JE (Afternoon) : 2014]

■■■■

## Answers Theory of Columns and Shear Centre

7.1 (a) 7.2 (c) 7.3 (c) 7.4 (b) 7.5 (a) 7.6 (d) 7.7 (d) 7.8 (d)

## Explanations Theory of Columns and Shear Centre

**7.1 (a)**

| End condition | Effective length |
|---|---|
| (i) Both ends fixed | $L/2$ |
| (ii) Both ends pinned | $L$ |
| (iii) One end fixed other end pinned | $L/\sqrt{2}$ |
| (iv) One end fixed other end free | $2L$ |

**7.2 (c)**

With increase in slenderness ratio, allowable stress decreases.

$$\text{Slenderness ratio} = k \times \frac{L}{r}$$

∴ Allowable stress can be increased by:

(i) Decreasing the length of column

(ii) Increasing the radius of gyration

**7.4 (b)**

$$r = \sqrt{\frac{I}{A}}$$

The resistance of any member to bending is determined by its flexural rigidity $EI$ and the quantity $I$ may be written as $I = Ak^2$

Where, $I$ = Area of moment of inertia

$A$ = Area of the cross-section

$k$ = radious of gyration

**7.5 (a)**

$$\text{Slenderness ratio} = k \times \frac{L}{r}$$

where,

$k$ is depends on end condition

$L$ is length of column

$r$ is radius of gyration

**7.6 (d)**

For a cantilever, $k = 2$

**7.8 (d)**

$$\text{For circular column, } r = \sqrt{\frac{I}{A}} = \sqrt{\frac{\pi d^4/64}{\pi d^2/4}} = \frac{d}{4}$$

$$\therefore \text{Slenderness ratio} = k \times \frac{L}{r} = \frac{1 \times 400}{40/4} = 40$$

(assuming $k = 1$)

■■■■

# 8 Miscellaneous

**8.1** If $t$ is the thickness of MS plate in mm, the standard weight (in kg) of the MS plate per sq. metre is

(a) 5.87 $t$ (b) 7.85 $t$
(c) 8.75 $t$ (d) 8.57 $t$

**[SSC : JE : 2011]**

**8.2** For a pin jointed plane structure to be statically determinate, the necessary condition is, where,
$m$ = number of unknown member forces
$r$ = number of unknown reactions
$j$ = number of joints

(a) $m + r = 2j$ (b) $3m + r = 2j$
(c) $m + r = 3j$ (d) $m + 2r = 3j$

**[SSC - JE : 2012]**

**8.3** The simplest geometrical form of a truss is a

(a) Trapezium (b) Square
(c) Triangle (d) Parallelogram

**[SSC - JE : 2012]**

**8.4** The beam shown below is indeterminate of degree

(a) 3 (b) 4
(c) 1 (d) 2

[SSC - JE : 2012]

**8.5** The angle of twist of a closed coil helical spring under an axial torque is given by

(a) $\frac{64Tdn}{ED^4}$ (b) $\frac{32Tdn}{ED^4}$

(c) $\frac{32TDn}{ED^4}$ (d) $\frac{64TDn}{Ed^4}$

[SSC - JE : 2012]

**8.6** Which of the beams given in the following figure is a determinate beam ?

(a)


(b)


(c)


(d) 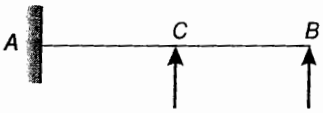


**[SSC - JE (Forenoon) : 2014]**

**8.7** Factor of safety is the ratio of :

(a) bearing stress and working stress
(b) yield stress and working stress
(c) tensile stress and working stress
(d) compressive stress and working stress

**[SSC - JE (Afternoon) : 2014]**

**8.8** 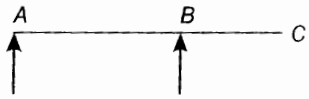


The beam shown in figure is :

(a) Free cantilever beam
(b) Single overhanging beam
(c) Double overhanging beam
(d) Proped cantilever beam

**[SSC - JE (Afternoon) : 2014]**

**8.9** Which of the following is a dimensionless quantity ?

(a) Shear force (b) Stress
(c) Strain (d) Modulus of elasticity

[SSC - JE (Afternoon) : 2014]

**8.10** A simply supported RCC beam of span '$L$' is loaded with downward acting uniformly

distributed load of intensity $w$kN/m over its entire length. Which of the following orientation of $T$-beams is preferred to resist bending?

(a) 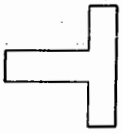

(b) 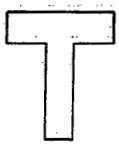

(c) 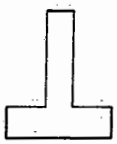

(d) 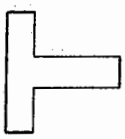

[SSC - JE (Afternoon) : 2014]

**8.11** In a structure, cables and wires are used generally as :

(a) to resist shear stress
(b) tension member
(c) compression member
(d) flexural member

[SSC - JE (Afternoon) : 2014]

**8.12** Moment of Inertia of rectangular section shown in figure about its base is:

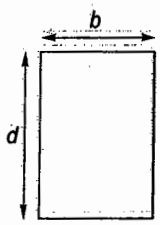


(a) $\frac{bd^2}{3}$ (b) $\frac{bd^3}{12}$

(c) $\frac{bd^3}{3}$ (d) $\frac{bd^2}{12}$

[SSC - JE (Afternoon) : 2014]

**8.13** Unit of second moment of area is :

(a) mm (b) $mm^4$
(c) $mm^3$ (d) $mm^2$

[SSC - JE (Afternoon) : 2014]

■■■■

## Answers Miscellaneous

**8.1 (b) 8.2 (a) 8.3 (c) 8.4 (d) 8.5 (d) 8.6 (a) 8.7 (b) 8.8 (b) 8.9 (c)**
**8.10 (b) 8.11 (b) 8.12 (c) 8.13 (b)**

## Explanations Miscellaneous

**8.1 (b)**

As per clause, 2.2.4.1 of IS 800 : 2007
Unit mass of steel = 7850 kg/$m^3$
∴ Weight (in kg) per sq.m = 7.85 $t$

**8.2 (a)**

For a pin jointed plane structure (truss)
Number of unknowns
= No. of members + No. of reactions
= $m + r$
Number of equations available
= 2 × No. of joints
= $2j$
∴ For the structure to be statically determinate
$m + r = 2j$

**8.4 (d)**

Assuming that only transverse loads are acting
Degree of static indeterminacy
= (2 + 1 + 1) − 2
= 2

**8.5 (d)**

$$\theta = \frac{T.L}{EI}, \quad L = \pi Dn, \quad I = \frac{\pi d^4}{64}$$

$$\therefore \quad \theta = \frac{64TDn}{Ed^4}$$

**8.8 (b)**

Overhang is only after the right support.

8.9 (c)

$$\text{Strain} = \frac{\Delta L}{L}$$

8.10 (b)

Compression develops at top and tension at bottom. So for RCC beam bottom material is not utilized.

8.11 (b)

Cables and wires act as tension members.

8.12 (c)

$$I = I_{c.g} + A\bar{x}^2$$

$$= \frac{bd^3}{12} + bd \times \left(\frac{d}{2}\right)^2$$

$$= \frac{bd^3}{3}$$

■■■■

# Unit X

# RCC Design

## Contents


| Sl. | Topic | Page No. |
|---|---|---|
| 1. | Working Stress & Limit State Method | 86 |
| 2. | Shear, Torsion, Bond, Anchorage and Development Length | 89 |
| 3. | Footing, Columns, Beams and Slabs | 90 |


OOOO

# 1 Working Stress & Limit State Method

1.1 In limit state of collapse against flexure, the maximum strain in tension reinforcement at failure shall not be less than

(a) 0.002 (b) $0.002 + \frac{f_y}{E_s}$

(c) $0.002 + \frac{f_y}{0.87E_s}$ (d) $0.002 + \frac{f_y}{1.15E_s}$

[SSC : JE : 2011]

1.2 According to IS 456:2000, the maximum depth of stress block for balanced section of beam of effective depth d using steel with $f_y$ = 250, is given by

(a) 0.43 d (b) 0.53 d

(c) 0.68 d (d) 0.73 d

[SSC : JE : 2011]

1.3 The characteristic strength of concrete is defined as that compressive strength below which NOT more than

(a) 2% of results fall

(b) 10% of results fall

(c) 5% of results fall

(d) None of these

[SSC - JE : 2012]

1.4 The modulus of elasticity of concrete (in N/mm$^2$) can be assumed as follows where $f_{ck}$ is the characteristic cube compressive strength of concrete (in N/mm$^2$)

(a) $4000\sqrt{f_{ck}}$ (b) $5000\sqrt{f_{ck}}$

(c) $2000\sqrt{f_{ck}}$ (d) $3000\sqrt{f_{ck}}$

[SSC - JE : 2012]

1.5 The horizontal distance between parallel main reinforcements in RC slab shall not be more than

(a) 4 times effective depth of slab

(b) 5 times effective depth of slab

(c) 3 times effective depth of slab

(d) 2 times effective depth of slab

[SSC - JE : 2012]

1.6 Critical section for calculating bending moment for a spread concrete footing of effective depth *d* is given by the plane at

(a) (*d*/2) from column face

(b) *d* from column face

(c) column face

(d) 75 mm from face

[SSC - JE : 2012]

1.7 If *L* is the effective length of a column and *B* is the least lateral dimension, then the column will be treated as short column if the ratio of *L*/*B* is equal to or less than

(a) 14 (b) 12

(c) 18 (d) 16

[SSC - JE : 2012]

1.8 The factored loads at the limit state of collapse for *DL* + *LL*, *DL* + *WL* and *DL* + *LL* + *WL* combinations, according to IS : 456 – 2000 are respectively

(a) 1.2 *DL* + 1.2 *LL*, 1.5 *DL* + 1.5 *WL*, 1.5 *DL* + 1.5 *LL* + 1.5 *WL*

(b) 1.2 *DL* + 1.5 *LL*, (0.9 or 1.5)*DL* + 1.5 *WL*, 1.2 *DL* + 1.2 *LL* + 1.2 *WL*

(c) 1.5 *DL* + 1.5 *LL*, 1.2 *DL* + 1.2 *WL*, 1.5 *DL* + 1.5 *LL* + 1.5 *WL*

(d) (0.9 or 1.5)*DL* + 1.5 *LL*, 1.5 *DL* + 1.5 *WL*, 1.2 *DL* + 1.2 *LL* + 1.2 *WL*

[SSC - JE : 2012]

1.9 A compression member is termed as column or strut if the ratio of its effective length to the least lateral dimension is more than

(a) 3 (b) 5

(c) 1 (d) 2

[SSC - JE : 2012]

1.10 If the modular ratio is '$m$', stress ratio in steel and concrete is '$r$', then the critical neutral axis constant '$k$' is given by

(a) $m/(m-r)$ (b) $m/(m+r)$

(c) $(m+r)/m$ (d) $m^2/r$

[SSC : JE : 2013]

1.11 As per IS 456, splitting tensile strength ($f_{cr}$) of concrete may be estimated from compressive strength as

(a) $f_{cr} = 0.65\sqrt{f_{ck}}$ (b) $f_{cr} = 0.7\sqrt{f_{ck}}$

(c) $f_{cr} = 0.75\sqrt{f_{ck}}$ (d) $f_{cr} = 0.8\sqrt{f_{ck}}$

[SSC : JE : 2013]

1.12 In a singly reinforced beam, if the permissible stress in concrete reaches earlier than the permissible stress in steel, the beam section is called

(a) Under reinforced section

(b) Over reinforced section

(c) Balanced section

(d) Economic section

[SSC : JE : 2013, (Afternoon) : 2014]

1.13 If the area of tension reinforcement provided is less than that required for a balanced section, then the RCC beam section is called

(a) over reinforced

(b) neutral reinforced

(c) under reinforced

(d) bottom reinforced

[SSC - JE (Forenoon) : 2014]

1.14 In limit state of collapse for direct compression, the maximum axial compressive strain in concrete is

(a) 0.002 (b) 0.003

(c) 0.0035 (d) 0.004

[SSC - JE (Forenoon) : 2014]

1.15 In limit state method of design, for bars in compression the values of bond stress shall be

(a) Decreased by 25%

(b) Increased by 20%

(c) Decreased by 20%

(d) Increased by 25%

[SSC - JE (Afternoon) : 2014]

1.16 Generally concrete cube tests measure concrete's

(a) Compressive strength

(b) Tensile strength

(c) Twisting strength

(d) None of the above

[SSC - JE (Afternoon) : 2014]

1.17 As per IS 456-2000, in the absence of test data, the approximate value of the total shrinkage strain for design may be taken as:

(a) 0.004 (b) 0.001

(c) 0.002 (d) 0.0003

[SSC - JE (Afternoon) : 2014]

■■■■

## Answers Working Stress & Limit State Method

1.1 (d) 1.2 (b) 1.3 (c) 1.4 (b) 1.5 (c) 1.6 (c) 1.7 (b) 1.8 (d) 1.9 (a)

1.10 (b) 1.11 (b) 1.12 (b) 1.13 (c) 1.14 (a) 1.15 (d) 1.16 (a) 1.17 (d)

## Explanations Working Stress & Limit State Method

**1.1 (d)**

Refer assumption '*f*' of clause 38.1 of IS 456 : 2000.

**1.2 (b)**

| $f_y$ | $x_u/d$ |
|---|---|
| 250 | 0.53 |
| 415 | 0.48 |
| 500 | 0.46 |

**1.3 (c)**

Characteristic strength of concrete is defined as that compressive strength below which not more than 5% of test result falls.

**1.4 (b)**

Refer clause 6.2.3.1 of IS 456 : 2000.

**1.5 (c)**

According to clause 26.3.3(b) the horizontal distance between parallel main reinforcement bars shall not be more than three times the effective depth of solid slab or 300 mm whichever is smaller.

**1.6 (c)**

For a concrete footing supporting concrete column:

(i) Critical section for moment is at the face of column

(ii) Critical section for one way shear is at *d* from the face of column

(iii) Critical section for two-way shear is at 0.5 d from the face of column.

**1.7 (b)**

For a column of length *L* and least lateral dimension *B*,

If, $\frac{L}{B} \le 3 \rightarrow$ Pedestal

$3 \le \frac{L}{B} \le 12 \rightarrow$ Short column

$\frac{L}{B} > 12 \rightarrow$ Slender column

**1.8 (d)**

As per Table 18 of code IS 456 : 2000.

**1.10 (b)**

$$\frac{\sigma_{st}}{m} = \frac{\sigma_{cbc}(1-k)}{k}$$

$$\Rightarrow \quad r.k = (1-k)m \quad \left(\because \frac{\sigma_{st}}{\sigma_{cbc}} = r\right)$$

$$\Rightarrow \quad k = \frac{m}{(m+r)}$$

**1.11 (b)**

Refer clause 6.2.2 of IS 456 : 2000.

**1.12 (b)**

(i) **Under reinforced section:** Permissible stress in steel reaches earlier than permissible stress in concrete.

(ii) **Balanced section:** Permissible stress in steel and concrete reaches simultaneously.

(iii) **Over reinforced section:** Permissible stress in concrete reaches earlier than permissible stress in steel.

**1.14 (a)**

Refer clause 3.9.1 of IS 456 : 2000.

**1.15 (d)**

(i) For deformed bar conforming to 1786, bond stress shall be increased by 60%.

(ii) For bars in compression, the value of bond stress for bars in tension shall be increased by 25%.

**1.17 (d)**

Refer clause 6.2.4.1 of IS 456 : 2000.

■■■■

# 2 Shear, Torsion, Bond, Anchorage and Development Length

**2.1** If $\phi$ is the diameter of a bar in tension then a standard hook is equivalent to the anchorage value of straight length equal to

(a) $8\phi$ (b) $12\phi$
(c) $16\phi$ (d) $24\phi$

**[SSC : JE : 2011]**

**2.2** The HYSD reinforcement in RC slab shall not be less than

(a) 0.12 (*bd*)/100 (b) 0.12 (*bD*)/100
(c) 0.15 (*bd*)/100 (d) 0.15 (*bD*)/100

**[SSC : JE : 2011]**

**2.3** In limit stage method of design, for HYSD bars the values of bond stress shall be

(a) increased by 60%
(b) decreased by 60%
(c) increased by 50%
(d) decreased by 50%

**[SSC - JE : 2012]**

**2.4** If $\sigma_s$ is the stress in bar and $\tau_{bd}$ is the design bond stress, then the development length of a bar of diameter $\phi$ is given by

(a) $\frac{4\phi\sigma_s}{\tau_{bd}}$ (b) $\frac{\phi\sigma_s}{4\tau_{bd}}$
(c) $\frac{2\phi\sigma_s}{3\tau_{bd}}$ (d) $\frac{\phi\sigma_s}{3\tau_{bd}}$

**[SSC : JE : 2013]**

**2.5** Diagonal tension in a reinforced concrete beam

(a) is maximum at neutral axis.
(b) decrease below neutral axis and increases above netural axis.
(c) increases below netural axis and decreases above neutral axis.
(d) remains constant throughout the depth of beam.

**[SSC : JE : 2013]**

■■■■

## Answers Shear, Torsion, Bond, Anchorage and Development Length

**2.1 (c) 2.2 (b) 2.3 (a) 2.4 (b) 2.5 (a)**

## Explanations Shear, Torsion, Bond, Anchorage and Development Length

2.1 (c)

For bars in tension anchorage length of various hooks are:

(i) Standard hook = $16\phi$
(ii) 90° bend = $8\phi$
(iii) For each 45° bend = $4\phi$

2.2 (b)

Minimum percentage of steel in RC slab = 0.12%.
(As per clause 26.5.2.1 of IS 456 : 2000)

2.3 (a)

For HYSD (deformed) bar bond stress in increased by 60% as per clause 26.2.1.1 of IS 456 : 2000.

2.4 (b)

$$L_d = \frac{\phi f_s}{4\tau_{bd}}$$

2.5 (a)

For an element on the neutral axis, the shear stress is maximum and the normal stress is zero. An element at that level is under pure shear. The principal tensile stress ($\sigma_1$) is inclined at 45° to the neutral axis.

Since the shear force is maximum near the supports, cracks due to shear occur near the supports. The cracks are formed around the neutral axis and perpendicular to the principal tensile stress ($\sigma_1$).

■■■■

# 3 Footing, Columns, Beams and Slabs

**3.1** A slab is designed as a two-way slab if the ratio of long span to short is smaller than
(a) 1.0 (b) 1.2
(c) 1.5 (d) 2.0
**[SSC : JE : 2011]**

**3.2** Minimum percentage of tension steel in on RCC beam for Fe 500 steel is
(a) 0.22 (b) 0.80
(c) 0.12 (d) 0.17
**[SSC - JE : 2012, 2013]**

**3.3** In reinforced and plain concrete footing resting on soils, the thickness at edge shall not be less than
(a) 30 cm (b) 50 cm
(c) 15 cm (d) 25 cm
**[SSC - JE : 2012]**

**3.4** Bending moment co-efficients and shear co-efficient for continuous beams of uniform cross-section as per IS 456 (tab-12 and 13) may be used only when spans do not differ to the longest span by
(a) 15% (b) 20%
(c) 10% (d) 12%
[SSC - JE : 2012]

3.5 A slender section buckle locally
(a) after reaching yield moment
(b) as soon as it reaches ultimate moment
(c) before reaching yield moment
(d) as soon as it reaches yield moment
[SSC - JE : 2012]

3.6 As per IS 456, the effective length of a cantilever shall be taken as
(a) clear span
(b) clear span + effective depth/2
(c) clear span + effective depth
(d) clear span + effective width
[SSC : JE : 2013]

**3.7** For two way action, i.e. punching shear, the calculated shear stress, $\tau_v$, should satisfy the following relation $\tau_v \le k_s \tau_c$, where $\tau_c$ according to working stress method is expressed as
(a) $0.1\sqrt{f_{ck}}$ (b) $0.16\sqrt{f_{ck}}$
(c) $0.25\sqrt{f_{ck}}$ (d) $0.4\sqrt{f_{ck}}$
**[SSC : JE : 2013]**

**3.8** The minimum horizontal distance between two main reinforcement bars should be
(a) diameter of largest bar or 5 mm more than the nominal maximum size of coarse aggregate, whichever is higher
(b) 5 mm more than the nomial size of the aggregate only
(c) 5 mm more than the diameter of the bar
(d) None of the above
**[SSC : JE : 2013]**

**3.9** Side face reinforcement shall be provided in the reinforced concrete beam when depth of web in the beam exceeds
(a) 500 mm (b) 750 mm
(c) 1000 mm (d) 1200 mm
[SSC : JE : 2013]

3.10 A cantilever retaining wall should **not** be used for heights more than
(a) 4 m (b) 6 m
(c) 8 m (d) 10 m
[SSC : JE : 2013]

3.11 A reduction factor $C_r$ to load carrying capacity for a long column of effective length $L_e$ and width $b$ is applied as obtained from the following expression:
(a) $1-\frac{L_e}{24b}$ (b) $1.25-\frac{L_e}{36b}$
(c) $1.25-\frac{L_e}{48b}$ (d) $1.5-\frac{L_e}{60b}$
[SSC - JE (Forenoon) : 2014]

3.12 A T-beam behaves as a rectangular beam of width equal to its flange if its neutral axis
(a) falls within the flange
(b) falls below the flange
(c) coincides with the geometrical central of the beam
(d) falls below the centroidal axis of the beam
[SSC - JE (Forenoon) : 2014]

3.13 If $\tau_v$ is the nominal shear stress, $\tau_c$ is design shear strength of concrete and $\tau_{c,max}$ is the maximum design shear strength of concrete which of the following statements is correct?
(a) If $\tau_v > \tau_{c'max'}$ section is to be designed for shear
(b) If $\tau_v > \tau_{c'max'}$ minimum shear reinforcement is to be provided
(c) If $\tau_v < \tau_{c'}$ minimum shear reinforcement is to be provided
(d) If $\tau_v > \tau_{c'}$ minimum shear reinforcement is to be provided
[SSC - JE (Forenoon) : 2014]

3.14 The minimum clear cover (in mm) for the main reinforcement in column, according to IS : 456–2000 is
(a) 20 (b) 25
(c) 40 (d) 50
[SSC - JE (Forenoon) : 2014]

3.15 The diameter of longitudinal bars of a RCC column should never be less than
(a) 6 mm (b) 8 mm
(c) 10 mm (d) 12 mm
[SSC - JE (Forenoon) : 2014, (Afternoon) : 2014]

3.16 In an RCC section of effective depth '*d*', if vertical stirrups are provided to resist shear, their maximum spacing measured along the axis of the member as per IS 456-2000 should not exceed
(a) 0.25 d (b) 0.50 d
(c) 0.75 d (d) 1.00 d
[SSC - JE (Forenoon) : 2014]

3.17 For a continuous slab of 3 m × 3.5 m size, the minimum overall depth of slab to satisfy vertical deflection limit is
(a) 5 cm (b) 7.5 cm
(c) 10 cm (d) 15 cm
[SSC - JE (Forenoon) : 2014]

3.18 The minimum percentage of steel in RCC slab using mild steel reinforcement in given by :
(a) 0.35 % (b) 0.12%
(c) 0.15% (d) 0.30%
[SSC - JE (Afternoon) : 2014]

3.19 Spacing of stirrups in a rectangular beam is
(a) increased at the ends
(b) kept constant throughout the length
(c) decreased towards the centre of the beam
(d) increased at the centre of the beam
[SSC - JE (Afternoon) : 2014]

3.20 The minimum percentage of longitudinal reinforcement in RCC column is :
(a) 12 (b) 0.6
(c) 0.8 (d) 1.0
[SSC - JE (Afternoon) : 2014]

3.21 The permissible bearing stress in working stress method of design of column base is equal to
(a) 0.87 *fy* (b) 0.6 *fy*
(c) 0.67 *fy* (d) 0.75 *fy*
[SSC - JE (Afternoon) : 2014]

3.22 A RCC column is regarded as long column if the ratio of its unsupported length between end restraints to least lateral dimension is more than :
(a) 25 (b) 150
(c) 125 (d) 60
[SSC - JE (Afternoon) : 2014]

■■■■

## Answers Footing, Columns, Beams and Slabs

3.1 (d) 3.2 (d) 3.3 (c) 3.4 (a) 3.5 (c) 3.6 (b) 3.7 (b) 3.8 (a) 3.9 (b)

3.10 (b) 3.11 (c) 3.12 (a) 3.13 (c) 3.14 (c) 3.15 (d) 3.16 (c) 3.17 (d) 3.18 (c)

3.19 (d) 3.20 (c) 3.21 (d) 3.22 (d)

## Explanations Footing, Columns, Beams and Slabs

**3.2 (d)**

$$\frac{A_{st\,min}}{bd} = \frac{0.85}{f_y} = \frac{0.85}{500}$$

$$\therefore \quad p_{t\,min.} = \frac{A_{st\,min}}{bd} \times 100 = 0.17\%$$

**3.3 (c)**

Refer clause 34.1.3 of IS 456 : 2000.

**3.4 (a)**

According toe clause 22.5.1 of code IS 456 : 2000. Unless more exact estimates are made, for beams of uniform cross-section which support substantially uniformly distributed loads over three or more spans which do not differ by more than 15 percent of the longest, the bending moments and shear force used in design may be obtained using the coefficients given in Table 12 and Table 13 respectively.

**3.5 (c)**

Slender section fails before reaching yield moment.

**3.6 (b)**

As per clause 22.2 of IS 456 : 2000.

The effective length of a cantilever shall be taken as its length to the face of the support plus half the effective depth except where it forms end of a continuous beam where the length to the centre of support shall be taken.

**.7 (b)**

As per clause 31.6.3 of IS 456 : 2000.

$$\tau_c = 0.25\sqrt{f_{ck}} \text{ in LSM}$$

$$= 0.16\sqrt{f_{ck}} \text{ in WSM}$$

**3 (a)**

Diameter of largest bar or 5 mm more than the nominal maximum size of coarse aggregate, whichever is higher.

**3.9 (b)**

Refer clause 26.5.1.3 of IS 456 : 2000.

**3.10 (b)**

Cantilever retaining wall resists lateral earth pressure by cantilever action of stem, toe slab and heel slab. Cantilever retaining walls are found best up to a height of 6 m. For greater heights earth pressure due to retained fill will be higher due to lever arm effect, higher moments are produced at base, which leads to higher section for stability design as well as structural design. This proves to be an uneconomical design. As an alternative to this, one may go for counter fort retaining wall, which demands greater base area as well as steel.

**3.11 (c)**

$$C_r = 1.25 - \frac{L_c}{48b}$$

**3.13 (c)**

If $\tau_v < \tau_c$, minimum shear reinforcement is to be provided.

According clause 40.3 of code IS 456 : 2000. When $\tau_v$ is less than $\tau_c$, minimum shear reinforcement shall be provided in accordance to caluse 26.5.1.6.

Minimum shear reinforcement in the form of stirrups shall be provided such that:

$$\frac{A_{sv}}{bs_v} \le \frac{0.4}{0.87f_y}$$

**3.14 (c)**

| Type of structure | Minimum clear cover (mm) |
|---|---|
| Beam/slab | 20 |
| Column | 40 |
| Foundation | 50 |

**3.15 (d)**

This is in accordance to 26.5.3.1 of code IS 456 : 2000.

**3.16 (c)**

According to clause 26.5.1.5 of code IS 456 : 2000. The maximum spacing of shear reinforcement measured along the axis of the member shall not exceed 0.75 $d$ for vertical stirrups and $d$ for inclined stirrups at 45° where $d$ is the effective depth of the section under consideration. In no case shall the spacing exceed 300 mm.

**3.17 (d)**

For continuous slab:

$$\frac{L}{d} \leq 26$$

(assuming no modification for tension reinforcement)

or, $$d \geq \frac{3000}{26}$$

or $$d \geq 115.4 \text{ mm}$$

Using clear cover of 20 mm

$$D = 115.4 + 20$$
$$= 135 \text{ mm}$$

Nearest answer is 150 mm i.e., 15 cm.

**3.18 (c)**

This is in accordance to clause 26.5.2.1 of code IS 456 : 2000.

Mild steel bar = 0.15%

HYSD bar = 0.12%

**3.19 (d)**

Shear force is less at mid span than support of a beam.

**3.20 (c)**

This is in accordance to clause 26.5.3.1 of code IS 456 : 2000.

Minimum reinforcement for column = 0.8%

Maximum reinforcement for column = 6%

**3.22 (d)**

As per clause 25.3.1 of IS 456 : 2000, the unsupported length between end restraint shall not exceed 60 times the least lateral dimension of column.

■■■■

SSC Junior Engineer

Civil Engineering

Paper-I : Objective

# Unit XI

# Steel Design

## Contents


| Sl. | Topic | Page No. |
|---|---|---|
| 1. | Structural Fasteners | 95 |
| 2. | Tension, Compression and Flexural Member | 97 |
| 3. | Plate Girders and Industrial Roofs | 99 |
| 4. | Miscellaneous | 100 |


OOOO

# 1 Structural Fasteners

1.1 According to Unwin's formula, the relation between diameter of rivet hole ($d$) in mm, and thickness of plate ($t$) in mm is given by

(a) $d = t$ (b) $d = 6.01\sqrt{t}$

(c) $d = 2t$ (d) $d = 2.6\sqrt{t}$

[SSC : JE : 2011]

1.2 The distance between two rivets measured perpendicular to the direction of applied force is known as

(a) pitch (b) gauge

(c) staggered pitch (d) edge distance

[SSC : JE : 2013]

1.3 Maximum size of the fillet weld for a plate of square edge is

(a) 1.5 mm less than the thickness of the plate.

(b) one-half of the thickness of the plate.

(c) thickness of the plate itself.

(d) 1.5 mm more than the thickness of the plate.

[SSC : JE : 2013]

1.4 The minimum edge and end distance from the centre of any hole to the nearest flame-cut edge shall **not** be less than

(a) 1.5 times hole dia

(b) 1.7 times hole dia

(c) 2 times hole dia

(d) 1.5 times bolt/rivet dia

[SSC : JE : 2013]

1.5 The throat in a fillet weld is

(a) larger side of the triangle of the fillet

(b) hypotenuse of the triangle of the fillet

(c) smaller side of the triangle of the fillet

(d) perpendicular distance from the root to the hypotenuse

[SSC - JE (Forenoon) : 2014]

1.6 The size of a rivet is identified by

(a) diameter of shank

(b) diameter of head

(c) length of shank

(d) shape of head

[SSC - JE (Forenoon) : 2014]

1.7 The maximum permissible stress for power driven field rivet in bearing on rivet is

(a) 100 N/mm$^2$ (b) 250 N/mm$^2$

(c) 270 N/mm$^2$ (d) 300 N/mm$^2$

[SSC - JE (Forenoon) : 2014]

1.8 The maximum permissible stress for hand driven rivet in axial tension is :

(a) 250 N/mm$^2$ (b) 80 N/mm$^2$

(c) 90 N/mm$^2$ (d) 100 N/mm$^2$

[SSC - JE (Afternoon) : 2014]

1.9 The size of a fillet weld is indicated by :

(a) size of the plate

(b) side of the triangle of fillet

(c) throat of the fillet

(d) length of fillet weld

[SSC - JE (Afternoon) : 2014]

1.10 Diameter of a rivet hole is made larger than the diameter of the rivet by

(a) 0.5 mm (b) 1.0 mm

(c) 3 mm (d) 2.0 mm

[SSC - JE (Afternoon) : 2014]

## Answers Structural Fasteners

1.1 (b) 1.2 (b) 1.3 (a) 1.4 (a) 1.5 (d) 1.6 (a) 1.7 (c) 1.8 (b) 1.9 (b)
1.10 (d)

## Explanations Structural Fasteners

**1.1 (b)**

When thickness of plate is more than 8 mm, Unwin's formula is used, which gives:

$$d = 6\sqrt{t} \text{ mm}$$

If $t < 8$ mm, $d$ is obtained by equating crushing strength to shear strength of the joint.

**1.2 (b)**

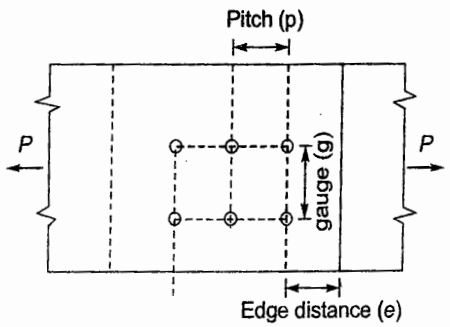


**1.3 (a)**

According to clause 10.5.8.1 of IS 800 : 2007 (General construction in steel : Code of practice) where a fillet weld is applied to the square edge of a part, the specified size of the weld should generally be at least 1.5 mm less than the edge thickness in order to avoid washing down of the exposed areas.

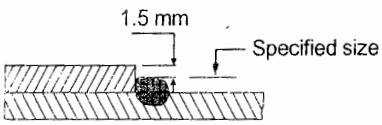


**1.4 (a)**

The minimum edge and end distances from the centre of any hole to the nearest edge of a plate should not be less than 1.7 times the hole diameter for sheared or hand-flame cut edges, and 1.5 times the hole diameter for rolled, machine-flame cut, sawn and planned edges.

The maximum edge distance from the centre of the hole to the nearest edge should not exceed $12\,t\varepsilon$ where $\varepsilon = \left(\frac{250}{fy}\right)^{1/2}$ and $t$ is the thickness of the thinner outer plate.

**1.5 (d)**

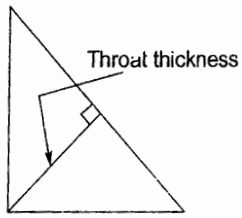


**1.7 (c)**

Maximum permissible stress in rivet (clause 4.6 of IS 1367 : 1967)

| Type | Axial tension (MPa) | Shear (MPa) | Bearing (MPa) |
|---|---|---|---|
| (i) Power driven | | | |
| (a) Shop rivet | 100 | 100 | 300 |
| (b) Field rivet | 90 | 90 | 270 |
| (ii) Hand driven | 80 | 80 | 250 |

**1.9 (b)**

Size of the fillet weld is minimum weld leg size.

**1.10 (d)**

Diameter of rivet hole is made larger than nominal diameter of the rivet by 1.5 mm for rivets less than or equal to 24 mm diameter and by 2 mm for diameter exceeding 2 mm diameter.

# 2 Tension, Compression and Flexural Member

**2.1** The maximum allowable slenderness ratio for axially loaded member carrying tension only is
(a) 180 (b) 250
(c) 350 (d) 400
**[SSC : JE : 2011]**

**2.2** A strut is a
(a) tension member (b) compression member
(c) flexural member (d) torsion member
**[SSC : JE : 2011]**

**2.3** The effective slenderness ratio of laced column, compared to actual maximum slenderness ratio shall be considered as
(a) 1.05 times (b) 1.10 times
(c) 1.15 times (d) 1.20 times
**[SSC : JE : 2011]**

**2.4** The lacing bars in steel columns should be designed to resist
(a) 0.5% of column load
(b) 1.5% of column load
(c) 2.5% of column load
(d) 3.5% of column load
**[SSC : JE : 2011]**

**2.5** The slenderness ratio $\frac{l}{r}$ of a lacing bar should be less than
(a) 250 (b) 350
(c) 145 (d) 180
**[SSC - JE : 2012]**

**2.6** The effective length of a steel column, effectively held in position and restrained against rotation at both ends is
(a) 0.80 L (b) 1.0 L
(c) 0.5 L (d) 0.65 L
**[SSC - JE : 2012]**

**2.7** Which one of the following factors does not affect the lateral buckling strength of a steel I-section undergoing bending about its major axis?
(a) Laterally unsupported length of the compression flange.
(b) Radius of gyration about the major axis of the section.
(c) Boundary conditions at the ends.
(d) Radius of gyration about the minor axis of the section.
**[SSC - JE : 2012]**

**2.8** For simply supported beams, the allowable deflection shall **not** exceed
(a) 1/325 of span (b) 1/350 of span
(c) 1/375 of span (d) 1/400 of span
**[SSC : JE : 2013]**

**2.9** A tie is a
(a) tension member
(b) compression member
(c) flexural member
(d) torsion member
**[SSC - JE (Forenoon) : 2014]**

**2.10** The slenderness ratio of lacing bars should not exceed
(a) 120 (b) 145
(c) 180 (d) 100
**[SSC - JE (Forenoon) : 2014]**

**2.11** The maximum allowable slenderness ratio for members carrying compressive load due to wind and seismic force only is
(a) 180 (b) 250
(c) 350 (d) 400
**[SSC - JE (Forenoon) : 2014]**

**2.12** Compression members always tend to buckle in the direction of the:
(a) Least radius of gyration
(b) Axis of load
(c) Perpendicular to the axis of load
(d) Minimum cross-section
**[SSC - JE (Afternoon) : 2014]**

## Answers Tension, Compression and Flexural Member

2.1 (d) 2.2 (b) 2.3 (a) 2.4 (c) 2.5 (c) 2.6 (d) 2.7 (d) 2.8 (a) 2.9 (a)

2.10 (b) 2.11 (b) 2.12 (a)

## Explanations Tension, Compression and Flexural Member

**2.1 (d)**

Refer table 3 of IS 800 : 2007.

**2.2 (b)**

A strut is a structural component designed to resist longitudinal compression.

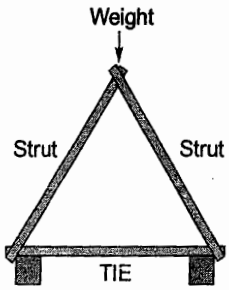


**2.3 (a)**

For laced column

Effective slenderness ratio = 1.05 times actual maximum slenderness ratio

For battened column

Effective slenderness ratio = 1.1 times actual maximum slenderness ratio

**2.5 (c)**

This is in accordance to clause 7.6.6.3 of code IS 800 : 2007.

**2.11 (b)**

This is in accordance to Table 3 of code IS 800 : 2007.

**2.12 (a)**

Slenderness ratio is more in the direction having least radius of gyration. So member fails by buckling in the direction having least radius of gyration.

■■■■

# 3 Plate Girders and Industrial Roofs

**3.1** The member of roof truss which supports the purlins is called as
(a) Sag rod (b) Main strut
(c) Principal rafter (d) Principal tie
**[SSC - JE : 2012]**

**3.2** Bearing stiffeners are designed as
(a) beams (b) beam-ties
(c) ties (d) column
**[SSC - JE (Forenoon) : 2014]**

**3.3** Horizontal stiffeners are needed in plate girders if the thickness of web is less than
(a) 6 mm (b) Depth/200
(c) Span/500 (d) Flange thickness
**[SSC - JE (Forenoon) : 2014]**

**3.4** In single laced column construction, the thickness of the flat lacing bars shall not be less than :
(a) $\frac{1}{15}$ th of the width of the lacing bar.
(b) $\frac{1}{30}$ th of the effective length of single lacing.
(c) $\frac{1}{40}$ th of the effective length of single lacing.
(d) $\frac{1}{10}$ th of the width of the lacing bar.
**[SSC - JE (Afternoon) : 2014]**

**3.5** The purpose of stiffeners in a plate girder is to:
(a) prevent buckling of web plate.
(b) reduce the shear stress.
(c) take care of bearing stress.
(d) increase the moment carrying capacity of the girder.
**[SSC - JE (Afternoon) : 2014]**

■■■■

## Answers Plate Girders and Industrial Roofs

3.1 (c) 3.2 (d) 3.3 (b) 3.4 (c) 3.5 (a)

## Explanations Plate Girders and Industrial Roofs

3.1 (c)
In architecture or structural engineering or building, a **purlin** (or purline) is a horizontal structural member in a roof. Purlins support the loads from the roof deck or sheathing and are supported by the **principal rafters** and/or the building walls, steel beams etc.

3.2 (d)
Bearing stiffener are designed as strut.

3.4 (c)
For single lacing:
$t \geq \frac{1}{40}$ of effective length of lacing
For double lacing:
$t \geq \frac{1}{60}$ of effective length of lacing

3.5 (a)
Stiffners are used for:
(i) Controlling local buckling
(ii) Connecting bracing or transverse beam

■■■■

# 4 Miscellaneous

**4.1** The beams supporting the stair steps are generally known as
(a) headers (b) trimmers
(c) stringers (d) spandrel beam
**[SSC : JE : 2013]**

**4.2** As per IS : 800, the factor of safety adopted with respect to the yield stress of steel is
(a) 1.45 (b) 1.5
(c) 1.67 (d) 2.0
**[SSC - JE (Forenoon) : 2014]**

**4.3** Permissible stress may also be known as
(a) ultimate stress (b) working stress
(c) limit stress (d) yield stress
**[SSC - JE (Forenoon) : 2014]**

**4.4** The load factor applied to wind and seismic loads in design of steel structures is
(a) 2.2 (b) 1.3
(c) 1.5 (d) 1.8
**[SSC - JE (Afternoon) : 2014]**

■■■■

## Answers Miscellaneous

4.1 (c) 4.2 (c) 4.3 (b) 4.4 (c)

## Explanations Miscellaneous

**4.1 (c)**

**Stringers:** These are beams in a bridge running parallel to the roadway and spanning between other beams which transfer the loads to main girders or trusses. Inclined breams supporting stairs in buildings are also called stringers.

**Spandrel beam:** These are the exterior or edge beams in a building supporting loads from exterior walls and from parts of the floor system.

**4.3 (b)**

Permissible stress refers to amount of stress that will not cause failure.

$$\text{Permissible stress} = \frac{\text{Ultimate stress}}{\text{Factor of safety}}$$

**4.4 (c)**

Load factor to be applied with wind and seismic load depends on type of load combination. For example:

At limit state of collapse:

(i) $1.5\,DL + 1.5\,LL$

(ii) $1.5\,DL + 1.5\,WL/EL$

(iii) $0.9\,DL + 1.5\,WL/EL$

(iv) $1.2\,DL + 1.2\,WL + 1.2\,WL/EL$

■■■■

# SSC

Staff Selection Commission

# Junior Engineer

## Section-B

## Civil Engineering

*Paper II : Conventional Paper*

Topicwise Previous Year Solved Questions

# Contents


| Sl. | Topic | Page No. |
|---|---|---|
| I. | **Building Materials** | **103** |
| | 1. Bricks, Stones and Timber | 103 |
| | 2. Cement & Lime | 110 |
| | 3. Concrete Technology | 113 |
| | 4. Paints and Miscellaneous | 121 |
| II. | **Estimating, Costing and Valuation** | **124** |
| | 1. Rate Analysis, Valuation and Miscllaneous | 124 |
| III. | **Surveying** | **126** |
| | 1. Fundamental Concepts of Surveying | 126 |
| | 2. Theodolites, Compass and Traverse Surveying | 126 |
| | 3. Levelling and Contouring | 134 |
| | 4. Tacheometric, Curve & Hydrographic Surveying | 136 |
| IV. | **Soil Mechanics** | **137** |
| | 1. Properties, Classification of Soils, Consolidation and Compaction, Permeability | 137 |
| | 2. Earth Pressure Theory, Stability Analysis of Slopes, Soil Stabilization and Exploration & Foundation Engineering | 148 |
| V. | **Hydraulics** | **156** |
| | 1. Fluid Properties, Hydrostatic Forces, Buoyancy and Floatation | 156 |
| | 2. Fluid Kinematics, Dynamics & Flow Measurements, Flow Through Pipes and Dimensional Analysis | 159 |
| | 3. Open Channel Flow & Hydraulic Machines | 165 |
| VI. | **Irrigation Engineering** | **167** |
| | 1. Water Requirement of Crops, Hydraylic Structures, Hydrology and Miscellaneous | 167 |
| VII. | **Transportation Engineering** | **170** |
| VIII. | **Environmental Engineering** | **174** |
| | 1. Water Demand | 174 |
| | 2. Quality Control of Water Supply and Water Treatment | 174 |
| | 3. Design of Sewer, Quality and Characteristics of Sewage | 180 |
| | 4. Treatment and Disposing of Sewage | 185 |
| | 5. Air and Sound Pollution | 186 |
| IX. | **Theory of Structures** | **187** |
| | 1. Properties of Metals, Stress & Strain | 187 |
| | 2. Shear Force and Bending Moment | 188 |
| | 3. Bending and Shear Stresses | 199 |
| | 4. Deflection of Beams | 202 |
| | 5. Theory of Columns and Shear Centre | 208 |
| | 6. Miscellaneous | 210 |
| X. | **RCC Design** | **219** |
| | 1. Shear, Torsion, Bond, Anchorage and Development Length | 219 |
| | 2. Footing, Columns, Beams and Slabs | 223 |
| XI. | **Steel Design** | **257** |
| | 1. Structural Fasteners | 257 |
| | 2. Tension, Compression and Flexural Member | 267 |


OOOO

# Unit I Building Materials

## 1. Bricks, Stones and Timber

**1.1 What are the properties of good building bricks? Name the different types of stones used in different works.**

**[SSC JE - 2005 : 8 + 7 = 15 Marks]**

**Solution:**

**Properties of good building bricks:** For construction purpose, good building bricks should have the following properties:

(a) The bricks should be table-moulded and kiln burnt. Moreover they must be free from cracks and must have regular shape with sharp edges.

(b) The bricks must produce a clear ringing sound when struck with each other.

(c) These bricks when broken or fractured should show a bright, homogeneous and uniform structure free from voids.

(d) The bricks should be hard enough so that no impression is left on the surface when scratched with nail or finger.

(e) When immersed in water for 24 hours, the bricks should not absorb water more than 20% by weight for first class bricks and 22% by weight for second class bricks.

(f) The brick should not break into pieces when dropped on a flat hard ground from a height of one meter.

(g) The brick should have low thermal conductivity and they should be sound proof.

(h) When soaked in water for 24 hours, the bricks should not show patches of white salts when dried in shade.

(i) In any case, bricks should not have a crushing strength less than 5.5 N/mm$^2$.

Different types of stones used in different works are as follows:

| S.No. | Stone | Classification | Uses |
|---|---|---|---|
| 1. | Basalt | Igneous | Road work, random rubble masonry, foundation work. |
| 2. | Kankar | Sedimentary | Road work, manufacture of hydraulic lime. |
| 3. | Granite | Igneous | In sills, steps, facade, ballast, columns and piers etc. |
| 4. | Marble | Metamorphic | Flooring, facade, columns, ornamental work etc. |
| 5. | Murum | Metamorphic | Garden walls, paths etc. |
| 6. | Sand stone | Sedimentary | Flooring, steps, facade, ornamental work etc. |
| 7. | Slate | Metamorphic | Roofing, sills, damp-proof courses etc. |
| 8. | Quartzite | Metamorphic | Retaining walls, concrete aggregate, pitching, rubble masonry facade etc. |
| 9. | Laterite | Metamorphic | Road work, rough stone masonry, building stone etc. |
| 10. | Chalk | Sedimentary | Putty manufacture, colouring material in PPC etc. |
| 11. | Lime stone | Sedinemtary | Flooring, steps, walls, road work, lime manufacture etc. |

**1.2 What are different classification of bricks according to BIS? Write down the various tests to ensure the quality of bricks.**

[SSC JE - 2005 : 4 + 6 = 10 Marks]

Solution:

**BIS Classification of bricks:** As per **Cl. 4 of IS 1077 : 1992**, bricks are classified on the basis of their mean compressive strength. The common classes of burnt clay bricks are as shown in Table.

| Class Designation | Mean compressive strength not less than ($N/mm^2$) |
|---|---|
| 35 | 35 |
| 30 | 30 |
| 25 | 25 |
| 20 | 20 |
| 17.5 | 17.5 |
| 15 | 15 |
| 12.5 | 12.5 |
| 10 | 10 |
| 7.5 | 7.5 |
| 5 | 5 |
| 3.5 | 3.5 |

Many times, bricks are also classified as first class bricks, second class bricks and third class bricks.

**Tests for ensuring the quality of bricks:**

1. **Compressive strength test:** This test is done in a compression testing machine. Bricks are tested for their compressive strength as per **IS 3495 (Part-I) : 1992.** The compressive strength of any brick must not be less than the minimum compressive strength as in the table above for that particular class of brick.
2. **Water absorption:** As per **IS 3495 (Part-II) : 1992** bricks when immersed in cold water for 24 hours, water absorption by bricks must not exceed 20% by weight up to Class 12.5 brick and 15% by weight for higher classes of bricks.
3. **Efflorescence:** As per **IS 3495 (Part-III) : 1992** bricks shall have a rating of efflorescence as 'moderate' up to class 12.5 bricks and 'slight' for higher classes of bricks.
4. **Hardness:** Here a scratch is made on the brick surface with a nail or some other hard pointed material. If it does not leave any impression then the brick is of good quality.
5. **Soundness test:** Two bricks when struck together must produce a clear ringing sound.
6. **Shape, size and colour test:** In this, 20 bricks are stacked along length-wise, width-wise and height-wise. Measurement is then made to test whether the bricks are of required size. Bricks are also closely examined for their sharp and uniform edges.

**1.3 Discuss the operations involved in the manufacture of bricks.**

[SSC JE - 2008 : 10 Marks]

Solution:

Operations involved in the manufacture of bricks:

(a) **Preparation of clay:** The preparation of clay for bricks involves the following processes:

(i) **Unsoiling:** The topmost layer of soil (about 200-300 mm) is taken out and discarded since top clay layer is full of impurities.

(ii) **Digging:** Clay is then dug out from the ground. This clay is then spread on the ground.

(iii) **Cleaning:** Clay obtained from the dug hole is cleaned of stones, pebbles, vegetable matter etc. The lumps of clay are crushed to powder form.

(iv) **Weathering:** The clay is then left in the atmosphere for mellowing. This period of exposure varies from few weeks to full season.

(v) **Blending:** After weathering, ingredients are added to clay and blending brings about a homogeneous mixture.

(vi) **Tempering:** Here water in required quantity is added to clay and the resulting mixture is then kneaded. Tempering is done thoroughly to have a homogeneous mass.

(b) **Moulding:** The clay so obtained in the above process is then moulded. Moulding can either be done with hands or with machine. Since bricks shrink during drying and burning and thus moulds are made larger than the size of fully burnt bricks.

- During moulding, a central depression of about 10 mm -20 mm is made which acts as a key for mortar joint and also can be used to embross the name of the manufacture.

(c) **Drying:** Damp bricks when burnt show cracking and their shape gets distorted. Thus bricks are dried before burning.

- While drying, bricks are so dried that there should be free circulation of air.
- The drying beds for bricks are kept slightly above the finished ground level.
- The period of drying varies from 3 to 10 days.

(d) **Burning:** It imparts strength and hardness to bricks. Bricks should neither be under brunt nor over burnt. Under burnt bricks are soft while over burnt bricks are brittle.

- Bricks are burnt at about 1100°C. At 650°C, organic matter present in the brick gets oxidized.
- Beyond 1100°C, bricks get converted into fusible glassy mass and bricks are said to be vitrified.

**1.4 Describe the following tests to be performed in case of burnt clay bricks:**

**(i) Compressive strength test**

**(ii) Water absorption test**

[SSC JE - 2008 : 10 Marks]

Solution:

(i) **Compressive strength test:** The compressive strength test on brick is assessed by placing it in compression testing machine. Minimum compressive strength of brick should be 3.5 N/mm$^2$ as per IS 1077. Bricks with compressive strength more than 14 N/mm$^2$ are classified as class AA bricks and those having strength in between 7 to 14 N/mm$^2$ are classified as class A bricks.

(ii) **Water absorption test:** This test is done to assess the water absorption tendency of bricks. For this, brick is immersed in water for 16 hours. It is weighed before and after the immersion in water. The difference in the two weights gives amount of absorbed water. For a good brick, the percentage water absorption should not exceed 20%.

**1.5 Write a brief note on the characteristics of good timber.**

[SSC JE - 2008 : 15 Marks]

Solution:

Characteristics of good timber:

(a) Appearance: Timber should have a shiny and good appearance.

(b) Elasticity: Timber must be elastic enough for the purpose of making of bows, sports items etc.

(c) Colour: Preferably timber should be dark coloured as light coloured timber is generally weak.

(d) Defects: Timber must be free from all the defects as far as possible.

(e) Hardness: Timber must be sufficiently hard to be able to resist the penetration of any other body into it.

(f) Fire resistance: A good timber must be sufficiently fire resistant. In general, dense wood offers more fire resistance than light wood. The conduction of heat through wood depends on its porosity, water content, ambient temperature, bulk density, fiber orientation etc.

(g) Shape: Timber should be able to retain its shape during the conversion and seasoning process. It must not wrap or bow during the conversion process.

(h) Smell: Sweet smell of timber is always desirable since pungent smell indicates decayed timber.

(i) Durability: Timber should be durable enough to resist the attack of fungi, insects, chemicals etc.

(j) **Sound:** A good timber gives clear ringing sound when struck with another piece of timber. On striking the timber pieces, dull sound indicates decayed timber.

(k) **Toughness:** In order to resist shocks and vibrations, timber must be sufficiently tough.

(l) **Permeability:** It is always desirable that timber should not be too permeable to water as water retention in timber has adverse effects on its strength.

(m) **Weight:** A heavy weight (i.e. dense) timber is considered to be tougher than light weight timber.

(n) **Workability:** Timber must be workable so that it may not clog the saw teeth and should be capable of being made smooth.

**1.6 Describe briefly the characteristics of good stones.**

**[SSC JE - 2009 : 10 Marks]**

**Solution:**

**Characteristics of good stones:**

(a) **Crushing strength:** For a good building stone, crushing strength must be greater than 100 N/mm$^2$.

(b) **Durability:** A good building stone must be durable. Durability of a stone is due to its chemical composition and texture.

(c) **Appearance:** Stones must appear good as far as building work is concerned. A uniform colour in building stones is desirable.

(d) **Hardness:** The hardness coefficient of a good building stone must be in between 14 -17. Stones with hardness coefficient greater than 17 are preferred in road work.

(e) ***Fracture:*** A good building stone when fractured should show a sharp, even, bright and clear grains well bonded with each other.

(f) **Specific gravity:** Specific gravity should preferably be greater than 2.7 for a good building stone. High specific gravity of stones indicates that they are more compact and less porous. However stones used for domes, roofs etc. should be lighter.

(g) **Texture:** A compact, fine crystalline structure free from cavities, cracks and white soft patches is preferable.

(h) **Fire resistance:** The minerals present in stone should be such that they do not aid fire and also the stone is preserved in case of fire. Rapid increase in temperature due to fire, sudden cooling, variation in thermal coefficients of different minerals etc. lead to fracture of stones.

(i) Toughness: In impact test, a toughness index of more than 19 indicates a tough stone while a value less than 13 indicates weak stone.

1.7 What do you mean by Seasoning of Timber? Describe the methods of seasoning timber.

[SSC JE - 2009 : 10 Marks]

Solution:

Seasoning of timber: The process of drying or reducing the moisture content of timber is called as its seasoning. Water must be removed from the timber before it can be put to any engineering use.

Methods of seasoning timber: There are mainly two methods of seasoning viz. natural seasoning and artificial seasoning.

(i) Natural seasoning: Here the seasoning is carried out in natural air. The timber is cut and sawn in suitable sections of planks. These timber pieces are stacked either horizontally or vertically through which free circulation of air is ensured.

**Advantages:**

1. The moisture content of timber can be brought down to 10 – 20% depending on the climatic conditions.
2. Natural seasoning does not require skilled supervision.
3. This method is cheap and easy.

**Disadvantages:**

1. The conditions of natural seasoning are difficult to control.
2. The moisture content of timber cannot be brought down to the desired level.
3. The space requirement for natural seasoning is quite large.
4. The drying of timber is not uniform.
5. The rate of seasoning is very small i.e. the process of natural seasoning is very slow.

(ii) **Artificial seasoning:** In order to overcome the drawbacks of natural seasoning, artificial seasoning is resorted to. The following are some of the methods of artificial seasoning:

- **Boiling:** Here the timber is immersed in water and boiled for about 3-4 hours. It is a quick method but it is costly.
- **Chemical seasoning:** Here the timber is immersed in a suitable salt solution and then seasoned in ordinary way. In this method, the inner surface of timber dries up prior to the outer surface and thus possibility of external cracks gets reduced.
- **Kiln seasoning:** In this method, the timber is dried in an air-tight oven. Saturated air (with moisture) and which is heated to about 35-38°C is then forced inside the oven. Since air is fully saturated with moisture and thus evaporation from the timber surface is not there however the heat gradually reaches inside the timber. This reduces the relative humidity. The temperature is then raised and maintained till the desired level of seasoning has achieved.
- **Electrical seasoning:** In this method, high frequency alternating current is used. Wet timber offers less resistance to the flow of current but due to the inherent electrical resistance of timber, heat is generated which dries up the timber faster. As the timber goes on drying, resistance keeps on increasing thereby increasing the rate of seasoning process. This method is quite costly.

**1.8 Describe the classification of rocks.**

**[SSC JE - 2010 : 10 Marks]**

Solution:

Rocks are classified as follows:

(i) **Igneous rocks:** These rocks are formed due to solidification of molten magma of Earth's crust. Igneous rocks are further classified as plutonic rocks and volcanic rocks. Plutonic rocks are formed due to rising up of hot magma from the Earth's crust and which gets cooled and solidified before it reaches the Earth's surface. Volcanic rock is formed due to arrival of hot magma (or lava) on the Earth's surface before it gets cooled.

**For example:** Granite, basalt etc.

(ii) **Sedimentary rocks:** These are formed due to deposition of material on the earth's surface. This deposited material is usually the product of weathering and erosion. Consolidation of these deposited material forms sedimentary rocks.

**For example:** Limestone, gypsum, sandstone etc.

(iii) **Metamorphic rocks:** These rocks are formed due to metamorphism i.e., the igneous and sedimentary rocks when subjected to high temperatures, high pressures or chemical action undergo major change in their mineralogical character. The resulting rock is referred to as metamorphic rock.

**For example:** Mica, gneiss, schist, calcite etc.

**1.9 Write a short note on the classification of bricks.**

**[SSC JE - 2013 : 15 Marks]**

**Solution:**

**Classification of bricks:** For construction purpose, bricks are classified into the following categories:

(a) **First class bricks:** These are table-moulded, kiln burnt bricks with sharp edges and standard shape. These are burnt in kilns. These are used in superior quality permanent type constructions.

(b) **Second class bricks:** These are ground-moulded, kiln burnt bricks with slightly irregular shape. These bricks may have hair cracks and their edges are not so sharp. These are used where a coat of plaster is to be provided.

(c) **Third class bricks:** These are ground-moulded, clamp burnt bricks. These are not hard and have rough surfaces with irregular edges. These are used at places where the rainfall is not heavy and for other temporary type of constructions.

(d) **Fourth class bricks:** These are over-burnt bricks with irregular shape and are dark coloured.These have a compact structure. These are generally used as aggregates for concrete to be used in foundations, roads etc.

**1.10 What are the constituents of good brick-earth? What constituents render brick-earth unsuitable for manufacturing bricks?**

**[SSC JE - 2014 : 10 Marks]**

**Solution:**

**Constituents of good brick earth:**

(i) **Alumina:** It is the principal component of the brick earth and a good brick earth must contain about 20-30% alumina. Alumina gives plasticity to the earth thereby making the moulding of brick earth easier. However excess of alumina leads to shrinkage and warping of bricks.

(ii) **Silica:** 50-60% silica in good brick earth is desirable. Silica exists in clay either free or in combined form. It prevents shrinkage, warping and cracking of bricks apart from imparting uniform shape to the bricks. However excess of silica destroys the cohesion between the particles of the brick earth and the bricks become brittle.

(iii) **Iron Oxide:** About 5-6 % iron oxide is desirable in a good brick earth. Iron oxide gives red colour to bricks. Excess of iron oxide leads to dark colouration in bricks like dark blue or blackish colour. However less quantity of iron oxide makes the bricks yellowish in colour.

(iv) **Lime:** About less than 5% lime should be present in a good brick earth. It should be in the very finely divided powder form. It prevents shrinkage of bricks. Excess of lime causes bricks to melt thereby losing its shape.

(v) **Magnesia:** A very small quantity of magnesia gives yellow colour to bricks. It also decreases shrinkage.

**Constituents which make the brick earth unsuitable:**

(i) **Pebbles:** Pebbles in brick earth does not allow uniform mixing of clay thereby leading to weak and porous bricks.

(ii) **Iron pyrites:** Iron pyrites cause the brick to disintegrate on burning because of oxidation of iron.

(iii) **Alkalies:** Alkalies (particularly soda and potash) acts like a flux in the kiln and they cause bricks to fuse. Also alkalies absorb water from the brick masonry. This moisture on evaporation leaves behind white patch(es) on the surface of brick masonry.

(iv) **Vegetation:** Presence of vegetation and other organic matter in brick earth aids in burning. However such matter if remains partially burnt then bricks will become porous due to evolution of gases on burning.

(v) **Lime:** Excess of lime makes the brick to lose its shape.

**1.11 Describe any two tests to be performed in case of burnt clay bricks.**

**[SSC JE - 2014 : 10 Marks]**

**Solution:**

**Tests on burnt clay bricks:**

(i) **Water absorption:** Here the water absorbing capacity of a brick is assessed. For this, a brick is taken and soaked in water for about 16 hours. The brick is weighed before and after soaking and the difference in the two weights gives the amount of water absorbed by the brick. It should not exceed 20% by weight of dry brick.

(ii) **Hardness:** Here a scratch mark is made on the brick surface with a finger nail. If no impression is left on the brick surface then the brick is treated as hard.

**1.12 Determine the number of bags of cement required for a brick masonary for a wall of thickness 30 cm for a height of 10 m and length 200 m in 1 : 4 mortar.**

**[SSC JE - 2014 : 20 Marks]**

**Solution:**

Cement mortar mix = 1 : 4

Size of wall = 200 m × 10 m × 0.3 m

Let thickness of mortar joint = $\frac{1}{2}$ inch = 12.7 mm = 1.27 cm

Let size of brick = 19 cm × 9 cm × 9 cm

Length of brick with mortar thickness = 19 + 1.27 = 20.27 cm

Area of one brick including mortar = 20.27 × 9 cm$^2$ = 182.43 cm$^2$

∵ Thickness of wall = 300 mm ≃ 1 brick thick wall

Front area of wall = 200 × 10 m$^2$ = 2000 m$^2$

∴ Bricks required = $\frac{\text{Volume of wall}}{\text{Volume of one brick with mortar}}$

$$= \frac{200 \times 10 \times 0.3 \text{ m}^3}{20.27 \times 10.27 \times 10.27 \text{ cm}^3}$$

= 280645 bricks

Mortar volume

Volume of one brick with mortar = 20.27 × 10.27 × 10.27 cm$^3$ = 2137.94 cm$^3$

Volume of one brick without mortar = 19 × 9 × 9 = 1539 cm$^3$

∴ Volume of mortar per brick = 2137.94 – 1539 = 598.94 cm$^3$

∴ Mortar volume for 280645 bricks = 598.94 × 280645 cm$^3$ = 168.09 m$^3$

Assuming 5% wastage, mortar volume required = 168.09 × 1.05 = 176.5 m$^3$

In 1 : 4 mortar, cement content = 0.052 m$^3$ per m$^3$ of mortar

But volume of one bag of cement = 0.035 m$^3$

∴ Cement required for 176.5 m$^3$ of 1 : 4 mortar

= 176.5 × 0.052 = 9.178 m$^3$

∴ No. of bags of cement required = $\frac{9.178}{0.035}$ = 262.22 ≃ 263 bags (say)

## 2. Cement & Lime

**2.1 List the properties of cement concrete in plastic and hardened stage.**

**[SSC JE - 2007 : 5 Marks, 2008 : 15 Marks]**

**Solution:**

**Properties of concrete in plastic state:**

1. **Mix ability:** Fresh concrete shows the property of mix ability wherein all the concrete constituents are so mixed so as to produce a homogeneous mix.
2. **Segregation:** Fresh concrete shows the property of segregation i.e. individual constituents of the concrete has the tendency to segregate.
3. **Bleeding:** In fresh concrete, if water is in excess then this water comes out to the surface of concrete known as bleeding.
4. **Workability:** It is the most important property of fresh concrete which defines the ease with which concrete can be placed and compacted.
5. **Finishability:** Fresh concrete should give a smooth surface finish without any honeycombing.

**Properties of concrete in hardened state:**

1. **Compressive strength:** It is the most important property of hardened concrete which is assessed either by cube test or cylinder test. The compressive strength given by different samples of the same concrete may give different results.
2. **Flexural strength:** Since it is difficult to carry out direct tensile strength test on concrete and thus tensile strength of concrete is estimated through flexural tensile strength. The flexural tensile strength of concrete at failure is called as **modulus of rupture** of concrete.
3. **Modulus of elasticity:** It is the ratio of direct stress to strain but for concrete, different moduli of elasticity of concrete are defined viz. *initial tangent modulus, secant modulus, and tangent modulus.*
4. **Poisson's ratio:** For concrete, the Poisson's ratio is defined for compression as the ratio of lateral strain to the longitudinal strain. For concrete, the Poisson's ratio varies from 0.11 to 0.21.
5. **Creep:** It is the increase in the strain (of concrete) with time due to sustained loading. Rate of creep decreases with time.

**2.2 Discuss the manufacture of cement.**

[SSC JE - 2010 : 10 Marks]

Solution:

Manufacture of cement: The following stages are involved in the manufacture of cement:

(i) Mixing (ii) Burning (iii) Grinding

(i) Mixing

- In the dry process of mixing (which is mostly adopted now a days), the calcareous materials (like limestone) and argillaceous materials (like clay) are crushed and fine grinded separately and then mixed in definite proportion.
- This mixed material is then preheated and the temperature of the material is increased in stages from 65°C to 850°C.
- This preheated material is then fed to the rotary kiln for further burning.

(ii) Burning:

- The burning is carried out in an inclined rotary kiln of tubular shape with diameter varying from 2.5 m to 3 m and length varying from 90 m to 120 m.

- The mixed material is fed to the kiln from the top. The hot gases are forced to eject out from the lower end of the kiln.
- At the upper end of the kiln, water gets evaporated (if any) and nodules get formed. These nodulus reach the lower end of the kiln where the temperature is about 1400-1500°C.
- In the burning zone of the kiln (at lower end), a calcined product of hard dark greenish blue colour gets formed. This is called as *clinker*.
- The size of the clinkers varies from 3 mm to 20 m and they are very hot as they come out of the burning zone of kiln.
- These clinkers are then allowed to cool down to a temperatures of about 90-95°C.

(iii) Grinding

- The clinkers obtained from rotary kiln are ground very fine in ball and tube mills.
- In the process of grinding, a small amount of gypsum is also added which acts as a retarder and controls the initial setting time of cement. Without gypsum, the cement will set as soon as water is added.
- The finely grounded resulting cement is then stored in silos for packaging.
- Cement is packed in bags of 50 kg of volume of about 35 liters.

2.3 Explain the manufacturing of cement by wet process.

[SSC JE - 2011 : 15 Marks]

Solution:

**Wet process of cement manufacturing:** Wet process was the earlier method of manufacturing cement. The agrillaceous material such as clay is thoroughly mixed with water in a container called as wash mill. This washed clay is kept in the basins. Crushed lime stone from silos and washed clay from basins are allowed to fall in a channel in the required proportions. The channel carries the material to grinding mills where they get properly mixed to form slurry. This slurry is then taken to a correcting basin where it is constantly stirred. Chemical composition is also adjusted at this stage only. This slurry is stored in storage tanks and is kept as a charge to be fed to rotary kiln.

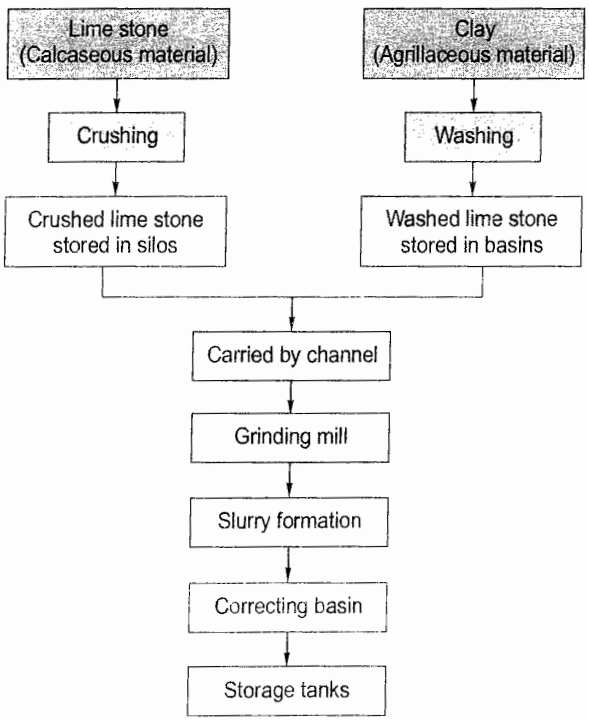

**Burning:** After slurry formation, burning is carried out in a rotary kiln. The kiln rotates at 1-3 rpm about its longitudinal axis. The rotary kiln is slightly inclined at 2°-2.5° with the horizontal. The slurry is injected at the upper end of kiln. The hot gases for drying are injected through the lower end of kiln. In the kiln, the small lumps formed known as nodules are converted into dark greenish blue balls known as clinkers.

**Grinding:** The clinkers obtained from the rotary kiln are ground finely in ball mills. During this process, 3-4% gypsum ($CaSO_4 \cdot 2H_2O$) is also added which controls the initial setting time of cement. Gypsum acts as a retarder in cement and prevents immediate setting of cement as soon as water is added.

**2.4 What are the chief chemical ingredients and their percentage used in the manufacturing of Portland cement? Also briefly explain the Bogue's components and their properties in the cement.**

**[SSC JE - 2012 : 20 Marks]**

**Solution:**

**Ingredients in Portland cement:** Chief ingredients used in the manufacture of Portland cement are:

| | | | | | | | |
|---|---|---|---|---|---|---|---|
| (i) | Lime (CaO) | — | 63% | (ii) | Silica ($SiO_2$) | — | 20% |
| (iii) | Ferrous oxide ($Fe_2O_3$) | — | 3% | (iv) | Alumina ($Al_2O_3$) | — | 6% |
| (v) | Magnesia (MgO) | — | 2% | (vi) | Sulphur trioxide ($SO_3$) | — | 1.5% |
| (vii) | Soda/potash | — | 1% | | | | |

**Bogue's Compounds:**

(i) **Tri-calcium silicate ($C_3S$):** It is responsible for gain of strength at 28 days.

(ii) **Di-calcium silicate ($C_2S$):** It imparts strength to cement at later stage due to hydration of $C_2S$.

(iii) **Tri-calcium aluminate ($C_3A$):** It is responsible for flash setting of cement. It is also responsible for the highest amount of heat evolution.

(iv) **Tetra-calcium alumino ferrite ($C_4AF$):** It hydrates very rapidly but its contribution in the overall strength of concrete is very low.

**2.5 List the physical tests that are generally used on cement. Describe any three of them.**

**[SSC JE - 2013 : 15 Marks]**

**Solution:**

**Physical tests for cement**

1. Fineness test
2. Initial and final setting time test
3. Soundness test
4. Compressive strength test
5. Specific gravity test

**Soundness:** The undesirable expansion of cement once it is set is called as unsoundness of cement. Very large change in the volume of cement results in disintegration and cracking of cement. The unsoundness in cement is due to the presence of free lime and magnesia (MgO). Because free lime is covered with a thin film of cement and thus free lime hydrates slowly. Once the cement has been set, moisture penetrates into the free lime thereby giving rise to cracking. The unsoundness of cement is measured with Le Chatelier's apparatus. The expansion in Le Chatelier's apparatus should not be more than 10 mm.

**Compressive strength:** It is the most important property of cement. The compressive strength is assessed by mortar-cement cube crushing test. This test is carried out on cube of standard size (generally 150 mm side). Cement-mortar (1 : 3) cubes having an area of 5000 mm² are prepared and then tested in a compression testing machine. For OPC, the 3 days and 7 days compressive strength of cement should not be less than 16 N/mm² and 22 N/mm² respectively.

**Specific gravity:** For OPC, the specific gravity is about 3.15. However, specific gravity is not an indication of the quality of cement. It is required for the computation of mix proportions.

2.6 State the conditions under which you will recommend the following cements. Also give the reasons.
(i) Rapid hardening cement
(ii) High Alumina cement

[SSC JE - 2014 : 10 Marks]

Solution:

(i) **Rapid Hardening Cement:** This cement is required where early strength development of concrete is required. This cement contains high amount of tricalcium silicate ($C_3S$). It is used under following situations:
- Where early removal of form work is required so as to achieve economy is construction.
- For rigid pavement constructions where road cannot be closed for a long period.
- In cold weather concreting, it is highly beneficial as rapid heat evolution prevents the concrete from freezing.

(ii) **High Alumina Cement:** High Alumina Cement (HAC) is used under following conditions:
- HAC is considered to be resistant against chemical attack and is thus particularly useful for marine constructions.
- HAC is used for construction of sewer pipes since it resists chemical attack.
- It is also used in refractory concrete where strength at high temperatures is required.

## 3. Concrete Technology

3.1 Explain the steps which can be taken to prevent/reduce the ill-effects of concreting in hot weather.

[SSC JE - 2005 : 10 Marks]

Solution:

**Concreting in hot weather:** Any concreting operation done in temperature above 40°C is called as hot-weather concreting. IS 7861 (Par-I):1975 specifies precautions to be taken for concreting above 40°C temperature. The following precautions must be taken:

1. In hot weather, the workability of concrete decreases and thus addition of water without proper adjustments in the concrete mix proportions mars the quality of concrete. Thus temperature of water is controlled by using refrigerated water. Precooling of aggregates and addition of broken pieces of ice can reduce the ill effects of hot weather concreting.
2. The mix should contain minimum cement content. Low heat cement should be used
3. Accelerators must not be used in hot weather conditions. Use of water reducing admixtures is beneficial.
4. The period between the mixing and placing of concrete must be the minimum.
5. The work area should be kept wet. Immediately after placing the concrete, steps should be taken to prevent the loss of water from concrete. Continuous curing is also very important. Moreover concreting can be done at night to reduce evaporation losses.

3.2 Explain the need for curing of concrete. List the different methods that can be used for wet curing of concrete. For how long should curing be done?

[SSC JE - 2005 : 3+4+3 = 10 Marks]

Solution:

**Curing of concrete:** The ultimate strength of concrete depends on the extent of hydration of cement. Complete hydration of cement requires adequate availability of water during the hydration reactions. But due

to evaporation and other reasons, water from concrete gets lost thereby making less water available for hydration of cement. The process of creation of an artificial environment with favourable conditions of temperature and humidity for setting and hardening of concrete by hydration of cement is called as *curing*.

**Different methods of curing:**

1. Ponding water on concrete surface by constructing small clay bunds.
2. Covering concrete with wet saw dust or damp earth.
3. Covering the surface of concrete with water proof paper.
4. Sprinkling of water at regular intervals.
5. Covering concrete with wet jute bags.
6. Membrane curing of concrete by applying membrane forming compound on concrete surface.
7. Chemical curing like the use of sodium silicate which forms a thin varnish like film which also gets filled in the pores and surface voids.
8. Steam curing

**Curing period:** The concrete gains most of its strength in 28 days and hence concrete should be cured for 28 days beyond which the rate of gain of strength is so small that it is not economical to further cure the concrete. IS 456 recommends a minimum of 7 days curing but IS 7861 recommends a minimum of 10 days curing in hot weather conditions.

For highway pavements, curing period varies from 13 to 30 days.

**3.3 Explain briefly the importance of different concretes in construction.**

[SSC JE - 2007 : 10 Marks]

Solution:

**Different concretes in construction:**

1. **Light weight concrete:**
   - The self-weight of concrete structure made from ordinary concrete is very high due to high density of conventional concrete (= 24 kN/m$^3$) and RCC (= 25kN/m$^3$). Moreover the conventional concrete has high thermal conductivity which aids in the loss of heat (energy) through them.
   - These issues are overcome by the use of light weight concrete wherein a significant amount of voids filled with air are introduced by the use of light weight aggregates.
   - This concrete is very useful in the seismic design of structures.
   - Because of low thermal conductivity, it has high fire resistance and is thus beneficial at fire prone locations.
   - It can be used as a pre-cast composite wall or floor panels.
2. Ultra-light weight concrete:
   - The density of this concrete varies from 600 to 1000 kg/m$^3$.
   - It has high thermal insulation.
   - It is used for levelling and screeds.
   - It is used for filling of voids.
   - It can advantageously be used for architectural finishes.
3. Mass concrete:
   - Massive structures like dams, canals, bridge piers and abutments etc. require huge amount of concrete and the same is called as mass concrete.
   - Because of mass concreting, high heat of hydration of cement is produced which gives rise to porous structure and thus preferably low heat cement should be used.

4. Vacuum concrete:
   - It is used for concreting thin sections like slabs and walls.
   - It is widely used for manufacture of pre-cast plain and reinforced concrete units.
   - It is used in the construction of horizontal and inclined slabs.
   - It is also used for repair and maintenance of pavements.
5. High density concrete:
   - The density of this concrete ranges from 33.5 kN/m$^3$ to 38.5 kN/m$^3$.
   - It is mainly used in the construction of reactor chambers where shielding of radiations is highly indispensable.
   - It is also used in the construction of offshore structures.
6. Ready mix concrete:
   - It is abbreviated as RMC.
   - It is mostly preferred over on-site concrete production due to better control on the concrete mix proportions and better monitoring.
   - It is used where faster construction is needed.
7. Shortcrete:
   - It is a mortar conveyed through a hose pipe and pneumatically projected on a surface with a high velocity.
   - It is used for filling the cracks of concrete.
8. Pumped concrete:
   - It is used for delivering concrete at inaccessible locations like top of a bridge pier, in the construction of high rise structures etc.

**3.4 Explain briefly the terms batching, mixing, transporting, compacting and curing.**

**[SSC JE - 2007 : 15 Marks]**

Solution:

**Batching:** Batching in concrete refers to accurate measurement of materials used in the production of concrete. The constituents of concrete are measured with the following tolerance limits:

| | | |
|---|---|---|
| Aggregate, cement, water | – | +3% of batch quantity |
| Admixtures | – | +5% of batch quantity |

- Batching may either be manual, semi-automatic or automatic.
- Manual batching is allowed for small and un-important construction jobs.
- In semi-automatic batching, the aggregate bin gates are opened by manually operated switches. The gates get closed automatically when required weight has been delivered.
- In automatic batching, materials are operated electronically by a single switch.

**Mixing:** Mixing is done so as to have a uniform mass of concrete and to coat all the aggregate surfaces with the binder (i.e. cement).

- Concrete mixing is done in a *mixer*.
- In the mixing process, firstly the cement paste is formed with simultaneous absorption of water in the aggregates. Subsequently, the cement paste coats the aggregate particles.
- After the mixing process gets over, it appears to be of uniform colour and grading.

**Transporting concrete:** Concrete from the mixer is transported to the place where it is required as soon as possible otherwise segregation or setting of concrete takes place.

- Specifications permit a maximum time of two hours between the addition of water to the cement and aggregates and the discharge provided concrete is transported in a truck mixer or in an agitator.
- In the absence of agitator, this time is reduced to one hour only.
- However concrete when poured in the form-work should have a temperature of not less than 5°C and not more than 32°C.

**Compacting concrete:** Air gets entrapped during the mixing and transportation process. If entrapped air is not removed then segregation of concrete may take place. The process of removal of entrapped air so as to have a uniform placement of concrete in a dense homogeneous mass is called as compaction of concrete.

- Even 5% voids in hardened concrete may reduce the strength of concrete by about 35%.
- Inadequate compaction leads to honey combing in the surface of concrete.
- A badly honey-combed concrete does not allow the bond to get develop between the concrete and the reinforcement thus reducing its strength.

**Curing of concrete:** It is the process of creation of an artificial environment in a relatively short period immediately after the placing and compaction of concrete which aids in setting and hardening of concrete.

- The presence of sufficient moisture makes up for the loss of moisture due to evaporation from the concrete.
- The concrete continues to gain strength if sufficient moisture is available for the hydration of cement. Thus curing aids in the strength development of concrete.

3.5 Describe the sequence of concreting operations.

[SSC JE - 2008 : 15 Marks]

Solution:

**Concreting operations:** The following operations are involved in the process of production and placing of concrete:

(a) **Batching:** It refers to measurement of concrete materials viz. cement, coarse aggregates, fine aggregates, water and admixture. Aggregates, cement and water are measured with an accuracy of ±3% and admixture with an accuracy of ±5%.

Batching may be manual, semi-automatic or automatic. Manual batching is used for small and works of low importance. Automatic batching is used for large and important works wherein materials are weighed electronically.

(b) **Mixing:** After batching, mixing of materials is done primarily to coat the surface of all aggregates with cement to form a uniform and homogeneous mass. Concrete mixing is done either by manual mixing or by the use of mechanical mixers. At the end of mixing operation, concrete appears to be of uniform colour.

(c) **Transportation:** Concrete from the mixer is required to be transported to a point where it is required to be placed. During transportation it is ensured that segregation of concrete does not occur. Where concrete is required to transported, the time lapse between addition of water to cement and aggregate and placing of concrete should not exceed two hours. At the time of placing of concrete, the temperature should not be less than 5°C and not more than 32°C.

(d) **Placing, compaction and finishing:** While placing the concrete, homogeneity of concrete must be ensured. The framework for concrete must be rigid and strong enough to bear the weight of concrete. Before placing, reinforcement is checked for tightness. Concrete is compacted to make it water tight. While compacting concrete care must be taken to avoid segregation. Too much compaction also leads to bleeding. Compaction removes entrapped air from concrete thereby making the concrete dense.

(e) **Curing:** Curing of concrete is essential to bring about the hydration of cement thereby developing strength in concrete. Curing can be done by any of the following methods:

(i) Ponding of water on concrete surface.

(ii) Covering concrete with wet jute bags or wet husk.

(iii) Regular sprinkling of water on concrete.

(iv) Covering the concrete surface with waterproof membrane

(v) Steam curing of concrete.

3.6 Write short notes on:

(i) Workability of concrete (ii) Slump test

[SSC JE - 2009 : 18 Marks]

Solution:

(i) **Workability of concrete:** It defines the ease with which concrete can be mixed, transported and placed i.e. how easily concrete can be handled. **IS 6461 (Part-VII):1973** defines the workability of concrete. Workability of concrete mix varies with the type of work. Many times, the terms *plasticity* and *consistency* are also used for workability.

(ii) **Slump Test:** Slump test measures the workability of concrete wherein a concrete cone is allowed to subside under gravity. This test is carried out in a mould called as slump cone. The slump cone is placed on a horizontal, non-absorbent surface and concrete is filled in it. After striking off the top surface, the cone is lifted up without disturbing the concrete. Due to gravity, the wet concrete subsides. This subsidence of concrete is measured (in mm) and is reported as slump of concrete. Concrete with high workability has slump value varying from 25 mm to 125 mm. Zero slump indicates very stiff concrete mix. However, the slump test is limited to concrete consisting of aggregates with maximum size 38 mm.

3.7 What do you understand by the term 'curing'? Why is it essential to have cured concrete? What are the various methods commonly adopted in curing?

[SSC JE - 2009 : 15 Marks]

Solution:

**Curing:** Concrete surfaces loose water due to evaporation thereby making the water less available for hydration of cement paste in concrete. Incomplete hydration of cement in concrete makes the concrete weak. Thus concrete surfaces are kept wet to make up for the loss of water due to evaporation thereby making sufficient water available for hydration of cement.

Cured concrete has the following advantages:

(a) Curing of concrete aids in complete hydration of cement which is essential for gain of strength of concrete.

(b) Proper curing of concrete ensures good durability and impermeability of concrete by reducing concrete shrinkage.

(c) The resistance of concrete to abrasion gets considerably increased due to curing.

Commonly adopted methods of curing:

(a) Ponding the concrete surface with water.

(b) Covering the concrete with wet jute bags.

(c) Covering the concrete with wet saw dust, wet sand, etc.

(d) Covering the concrete with a sheet of paper or polythene sheet.

(e) Intermittent spraying of water and continuous sprinkling of water

(f) By the use of curing compounds

**3.8 Discuss in detail "placing of concrete in cold and hot weather".**

[SSC JE - 2009 : 15 Marks]

**Solution:**

**Concreting in cold weather:** Any concreting operation done below 5°C is called as cold weather concreting. Low temperature makes the concrete to develop its strength very slowly. Ice-lenses formed in the plastic stage of concrete badly damages it.

Following are the affects of cold weather concreting:

(i) Lower temperature leads to ***delayed setting*** of concrete. This increases the time for removal of formwork thereby leads to increased cost of project.

(ii) Plastic concrete when exposed to low temperatures undergoes permanent damage like reduction in strength etc.

**Concreting in hot weather:** Concreting operation above 40°C is referred to as hot weather concreting. **IS 7861 (Part-I) : 1975** specifies precautions to be taken for concreting in hot weather conditions.

Following are some of the effects of hot weather concreting:

(i) High temperature leads to accelerated setting due to rapid hydration of cement. Workability of concrete decreases. This creates more demand for water in hot weather conditions.

(ii) Long term strength of hot weather concrete is lesser than normally produced concrete.

(iii) Hydration of cement takes place due to water present in the capillary pores which gets evaporated due to hot weather conditions. Thus more water is needed. Rapid hydration of cement gives rise to porous concrete thereby leading to lower strength.

(iv) Increased cracking results due to hot weather concreting. These cracks develop due to plastic shrinkage of concrete.

(v) At high temperatures, it is more difficult to control the air-content and thus air gets entrained in concrete. This badly affects the workability of concrete.

**3.9 Describe the properties of water which are necessary to be used to get good concrete. What do you understand by the term 'water-cement ratio'?**

[SSC JE - 2010 : 15 Marks]

**Solution:**

**Properties of water for good concrete:**

1. The water used for preparation and curing of concrete should be free from deleterious materials.
2. The presence of suspended particles of clay and silt up to 0.02% by weight of water is considered safe for concrete. IS 456 permits 2000 mg/l of suspended matter in water.
3. The water must be free from salts. The salts of magnesium (Mg), tin (Sn), lead (Pb) and copper (Cu) cause reduction in the strength of concrete. $ZnCl_2$ retards the initial setting of concrete while $Pb(NO_3)_2$ is totally destructive to concrete.

   Similarly salts of sodium (Na) like sodium iodate, sodium arsenate and sodium borate etc. reduce the initial strength of concrete.
4. Sea water in concrete increases the risk of corrosion of reinforcement. Moreover chlorides present in sea water leads to *efflorescence*.
5. Water must be free from algae as it combines with cement and decreases the bond strength between the aggregates and cement paste.
6. The amount of sugar present in water must be less than 0.05% by weight of water. Higher amounts (up to 0.15% by weight) of sugar retard the setting of cement and reduces the early strength. A further increase in the sugar content in water increases the setting but reduces the 28 day strength.

**Water-cement ratio:** A cement with average composition requires about 25% water by weight for hydration. In addition to that, water is required to fill in the gel-pores. Thus total amount of water needed for hydration of cement and to fill the gel-pores comes out to be about 42% by weight. Thus minimum water-cement ratio of 0.4 (sometimes taken as 0.36) is required.

**3.10 Discuss the significance of cold weather concreting with special emphasis on problems faced by concrete in freezing conditions.**

[SSC JE - 2011 : 15 Marks]

Solution:

**Cold weather concreting:** Any concreting operation done below a temperature of 5°C is called as cold weather concreting. Low temperature leads to slower development of concrete strength. Most of the Codes do not recommend concreting below 5°C. **IS 7861 (Part-II):1981** lays down measures to be taken in cold weather concreting. The following problems arise in cold weather concreting:

1. Low temperatures lead to delayed setting of concrete thereby delayed strength development.
2. Low temperature may cause early hardening of concrete. Any later thawing operation during the pre-hardening period of concrete may reduce compressive strength of concrete to about 50%.
3. Large temperature differential within the concrete may cause cracking and reduces the durability of concrete.

**3.11 Define workability of concrete and explain briefly the factors affecting workability.**

[SSC JE - 2011 : 15 Marks]

Solution:

**Workability:** It defines the ease with which concrete can be mixed, transported, placed and compacted.

The following factors affect the workability of concrete:

1. **Water cement ratio:** An increase in the water content results in the increase in workability of concrete and vice-versa. Too much water content (i.e. high water-cement ratio) makes the concrete highly workable but may lead to bleeding and segregation.
2. **Shape of the aggregates:** For the same volume of aggregate in concrete, rounded aggregates give higher workability than angular and flaky aggregates. In other words, a reduction in the total specific area of aggregates gives rise to higher workability.
3. **Properties of cement:** The properties of cement affect the workability of concrete to a great extent. A rapid hardening cement will reduce the workability as compared to OPC because the former hydrates more rapidly than the later.
4. **Size of the aggregates:** The size of the aggregates determines the void content in concrete. Aggregates amount to about 70-75 % of total volume of concrete. Smaller the specific surface area of aggregates, more water is available and thus workability increases.
5. **Time:** Fresh concrete is more workable and its workability reduces as time passes due to loss of moisture from the concrete.
6. **Environmental conditions:** Workability of concrete gets affected by the environmental conditions. In hot weather conditions, more water is required to maintain the workability of concrete. The amount of mixing water to bring about a certain change in the workability increases with temperature.

**3.12 Discuss the relation between water-cement ratio and strength.**

[SSC JE - 2013 : 15 Marks]

Solution:

In concrete, about 25% water by weight is required for complete hydration of cement. In addition to that, water is required by concrete to fill the gel pores. The total amount of water required for cement hydration

and to fill the gel pores is about 42% by weight. It is a general fact that complete hydration of cement never takes place in concrete. With increase in water-cement ratio, strength of concrete decreases.

**3.13 Describe the various defects in concrete along with precautions that should be exercised to prevent them.**

[SSC JE - 2014 : 30 Marks]

**Solution:**

**Various defects in concrete:** The various defects in concrete along with precautions to prevent them are enumerated below:

(i) **Crazing:** It is a network of very small surface cracks spreading out on a large area of concrete. This occurs due to finishing the concrete surface with bleed water at the top of concrete surface. Finishing work forces the bleed water to go into the concrete which increases the water-cement ratio thereby creating a weak layer of concrete surface. Thus bleeding of concrete should always be avoided.

(ii) **Spalling:** It is the breaking loose of large chunks of concrete just like scaling. It indicates weakness in the concrete at that location from where spalling is occurring. Alternate thawing and wetting cycle increase spalling of concrete.

(iii) **Efflorescence:** When inner water of concrete comes to the surface, it gets evaporated leaving behind some white spots or patches. This is because concrete contains some soluble salts and as water evaporates, the salts get deposited on the surface of concrete thereby creating spots or patches on concrete surface.

(iv) **Blister:** Blister is caused due to finishing of concrete surface while water and air still are on their way up through the mix to the concrete surface.

(v) **Scaling:** Thin flakes of concrete usually get peeled off from the surface. This occurs due to alternate freezing and thawing cycle.

**3.14 Describe briefly creep and shrinkage.**

[SSC JE - 2014 : 30 Marks]

**Solution:**

**Creep**: It is the deformation produced in a body due to sustained loading. In other words, it is the time dependent deformation at constant stress. It is particularly important for those materials that are supposed to work at high temperatures.

- In concrete, creep depends on the age of concrete, mix proportions and the aggregates.
- In cement concrete, principally it is the cement paste that undergoes creep while aggregates restrain this creep effect.
- A poor mix proportion leads to higher amount of creep and thus creep increases with increase in water cement ratio.
- The age at which concrete is subjected to loading affects very much the creep in concrete. Over a period of time, sufficient hydration of cement paste takes place which improves the quality of cement gel. In good gel structure of cement, creep is less.
- Creep in concrete increases deflection of structural members.
- In eccentrically loaded columns, creep increases buckling of columns thereby leading to higher column sizes with more reinforcement.

**Shrinkage:** It is the change (especially reduction) in volume due to temperature changes or change in moisture. In concrete, shrinkage is highly objectionable as it leads to the development of cracks in concrete. Shrinkage of concrete in foundations may even lead to complete collapse of the structure.

- The shrinkage of concrete increases with increase in water cement ratio. Larger the amount of water, more will the moisture change on drying and thus more will be the shrinkage.
- Presence of large amount of fines in concrete leads to more requirement of water thereby leading to more amount of shrinkage.

## 4. Paints and Miscellaneous

4.1 Write about different types of paints and polish used in modern buildings.

[SSC JE - 2005 : 15 Marks]

Solution:

Different types of paints used in buildings:

(a) **Cement paint:** It consists of white cement along with pigment and an accelerator. It is available in dry powder form. Generally it is used for decorative purpose. This paint has poor adhesion power with smooth surface and is thus always advantageous to apply on rough surface.

(b) **Anti-corrosive paint:** It consists of oil and a strong drier. Pigments like chromium oxide ($Cr_2O_3$) or lead (Pb) is mixed with very fine sand and is then added to paint. It protects the metal from corrosion especially when the metal is exposed to corrosive environment.

(c) **Bituminous paint:** It is prepared by adding asphalt in any oil or petroleum. It is used for painting under-water steel works.

(d) **Aluminium paint:** In this paint, finely grounded aluminium is suspended in quick drying spirit varnish or slow drying oil varnish as per the requirement. The evaporation of spirit or oil leaves a thin metallic film of aluminium on the surface being painted. This paint is visible in the dark also and protects steel better than any other paint. It has a high electrical resistance.

(e) **Cellulose paint:** It is prepared from cotton, celluloid sheets, photographic films etc. It hardens by evaporation of thinning agent. It gives flexible, hard and a smooth surface but is bit costlier than ordinary paint. Celulose painted surfaces can withstand high heat and cold.

4.2 Differentiate between the following materials, giving specific uses in the industry:

(a) Igneous, sedimentary and metamorphic rocks.

(b) Bitumen, coal tar and asphalt.

(c) Common burnt clay bricks, fire bricks and flyash brick.

(d) Paints and varnish.

[SSC JE - 2007 : 20 Marks]

Solution:

(a) Igneous, sedimentary and metamorphic rock

| S.No. | Igneous rock | Sedimentary rock | Metamorphic rock |
|---|---|---|---|
| 1. | Formed by cooling of magma | Formed by deposition of products of weathering of earlier rocks. | Formed by change in the character of pre-existing rock. |
| 2. | e.g. Pumice, gabbro, basalt, granite etc. | e.g. limestone, shale, dolomite, sandstone etc. | e.g. Slate, marble, quartzite, gneiss, serpentine etc. |

(b) Bitumen, coal tar and asphalt

| S.No. | Item | Bitumen | Coal Tar | Asphalt |
|---|---|---|---|---|
| 1. | Definition | It is the heavy residue from fractional distillation of crude oil. | It is obtained from destructive distillation of coal. | It is the mixture of bitumen and inorganic material like sand, stone etc. |
| 2. | Solubility | It is soluble in nonpolar solvents. | It is insoluble in nonpolar solvents | It is soluble in non polar solvents. |
| 3. | Physical apperance | It is a thick, viscous liquid. | It is liquid or semi-solid. | It is either in solid or semi-solid form. |
| 4. | Use | Mainly for preparation of asphalt. | It is used as a protection for wood, in the manufacture of roofing felts etc. | It is primarily used for construction of bituminous pavements. |

(c) Common burnt clay bricks, fire bricks and fly ash bricks

| S.No. | Item | Common burnt clay brick | Fire brick | Fly ash brick |
|---|---|---|---|---|
| 1. | Characteristics | Its colour is usually red but varies as per the colour of soil. | It is usually white or yellowish white in colour. | It has a uniform greenish blue (cement like) colour. |
| 2. | Porosity | More porous | Less porous | Less porous |
| 3. | Weight | Heavy | Heavy | Light |
| 4. | Compressive strength | ~3.5 N/mm$^2$ | ~20 N/mm$^2$ | ~10 N/mm$^2$ |

(d) Paint and varnish

| S.No. | Paint | Varnish |
|---|---|---|
| 1. | It is a coating of a fluidic material that is applied on the timber or metallic surfaces. | It is nearly transparent solution of resinous material and is applied on the painted surface. |

4.3 Describe the various ingredients of a paint.

[SSC JE - 2009 : 10 Marks, 2013 : 15 Marks]

Solution:

**Various ingredients of paint:** Oil based paint essentially consists of the following ingredients:

1. **Base:** A base is a solid substance in a very finely divided form which forms the bulk of the paint. It imparts durability to the paint and determines its character. It reduces the shrinkage cracks on drying of paint and also forms an opaque layer to make opaque the surface being painted. Some of the bases used in paint are white lead, red lead, zinc oxide, iron oxide, antimony white, titanium white, lithophone etc.
2. **Vehicle or carrier:** A vehicle is the liquid substance which holds the ingredients of paint in suspension. It makes possible to spread the paint on the surface to have a uniform thin layer and also acts as a binder for the ingredients of the paint so that they may adhere to the surface. Some of the commonly used vehicles are linseed oil, tung oil, poppy oil, nut oil etc.
3. **Drier:** This accelerates the process of drying of paint. It absorbs oxygen from the air and transfers it to the linseed oil (vehicle) which in turn gets hardened.
4. **Colouring pigment:** It is added to paint when it is required to have colour of the paint other than that of base. The pigments are available in the form of fine powder. Table below gives the type of pigment used for different colour.

| Colour of paint | Pigment |
|---|---|
| Black | Graphite, lamp black, vegetable black etc. |
| Yellow | Chrome yellow, zinc chrome, yellow ochre etc. |
| Red | Vermilion red, red lead, carmine etc. |
| Blue | Indigo, prussian blue etc. |
| Brown | Raw umber etc. |
| Green | Copper sulphate, chrome green etc. |

4.4 What are the ingredients of a varnish? Describe the various types of varnishes.

[SSC JE - 2010 : 10 Marks]

Solution:

**Ingredients of a varnish:** Varnish consists of the following:

1. **Resin:** Copal, lac or shellac and rosin are some of the commonly used resin. Some other types of resin are amber, mastic, gum dammer etc.

2. **Drier:** Drier accelerates the drying process. The commonly used driers are litharge, white copper and lead acetate.
3. **Solvent:** The type of solvent depends on the type of resin used. e.g. Linseed oil is used for amber and copal resins, turpentine is used for mastic, rosin type of resins, wood naphtha is used for some other varieties of resins etc.

**Various Types of Varnishes:** according to the type of solvent used, varnishes are classified as:

1. **Oil varnish:** Linseed oil is used as a solvent in this varnish. Hard resins like amber and copal are dissolved in linseed oil and sometimes a small quantity of turpentine is also used. Oil varnish dries up very slowly but forms a hard and durable surface.
2. **Spirit varnish:** In this, the methylated spirit of wine is used as the solvent. The spirit varnish dries up quickly but is not durable and is easily affected by weathering actions.
3. **Turpentine varnish:** Here turpentine oil is used as the solvent and the resins used are of soft variety like mastic and rosin. These varnishes dry up quickly and possess some light colour but are not tough and durable.
4. **Water varnish:** Some of the resins like shellac is dissolved in hot water and sufficient quantity of ammonia or borax or potash or soda is added. These varnishes are used for varnishing maps, pictures etc.

4.5 Explain the following thermal insulation.

(i) Slab or block insulation
(ii) Blanket insulation
(iii) Batt insulating material
(iv) Insulating board

[SSC JE - 2012 : 5 x 4 = 20 Marks]

Solution:

(i) **Block insulation:** It is a rigid or semi-rigid block of insulating material. The insulating material may be of fiberglass, wool or any other material. Now-a-days asbestos block insulation is very much in use but it poses health hazard because asbestos fibers are carcinogenic.

(ii) **Blanket insulation:** It is made from fiberglass and comes in varying densities and thicknesses as per the requirement of the user. Basically it is same as batt insulation with the only difference that it is supplied as continuous rolls instead of sheets.

(iii) **Batt insulating material:** It is used to insulate floors, walls and ceilings. It is generally made from naturally occurring certain varieties of cotton or fiberglass or slag wool. This insulating material is cheap, energy efficient and also has a long life. It is quite easy to install but for larger jobs, specialized personnel may be needed. Both batt and blanket insulation are fire resistant and good for retrofitting but there exists the possibility of occurrence of holes where air can circulate. Moreover fiberglass particles pose a health hazard as well.

(iv) **Insulating board:** It is a thin, lightweight, rigid or semi-rigid board, generally made from plant fibers. The materials used for insulating board depend on their insulating properties. These are created using foam plastics or glass fiber. These boards are made fire resistant and moisture resistant with the application of certain chemicals. These materials are categorized based on their insulating values.

■■■■

# Unit II Estimating, Costing and Valuation

## 1. Rate Analysis, Valuation and Miscllaneous

1.1 What is analysis of rates? Explain its purpose.

[SSC JE - 2011 : 15 Marks]

Solution:

**Analysis of rates:** In order to assess the rate of a particular item of work from the quantities of materials and labours required, hiring of tools and plants, water changes, contractor's profit etc., an analysis of rate is carried out. It is done in order to have an idea about the cost estimate of the work. Estimate of the work to be done is quite important before floating a tender. Contractor's profit is added on all items of work which have been arranged by him.

**Analysis of rates comprises of the following components:**

(a) Cost of material
(b) Cost of labour
(c) Tools and plant and sundries (miscellaneous items)
(d) Carriage or the transportation cost
(e) Contractor's profit (usually it is kept 10-15%).

**Purpose of rate analysis:**

1. To determine the authenticity of rates quoted by contractor.
2. To assess the quantity of materials and labours required for work.
3. To reconsider and revise the schedule of rates due to cost revision in materials, labour etc.
4. To determine the prevalent rate for doing the work in the location under consideration.

1.2 The annual sinking fund of a machine costing ₹ 50,000 is ₹ 150 and its salvage value is estimated to be ₹ 5,000. Assuming interest rate as 4%, determine the life of the machine.

[SSC JE - 2013 : 20 Marks]

Solution:

$\because$ ₹150 is deposited every year for '$n$' years in an account that earns 4% interest.

$\therefore$ At the end of '$n$' years amount required = cost of machine – salvage value

$= 50000 - 5000 = ₹\ 45{,}000$

Thus, this Rs. 150 deposited @4% interest must generate Rs. 45000 after '$n$' years.

$$\therefore \quad 45000 = 150\left(\frac{F}{A}, 4\%, n\right)$$

$$\Rightarrow \quad 45000 = 150\left[\frac{(1+0.04)^n - 1}{0.04}\right]$$

$$\Rightarrow \quad 300(0.04) = (1.04)^n - 1$$

$$\Rightarrow \quad n = 65.4 \text{ years} \simeq 65 \text{ years (say)}$$

$\therefore$ Life of machine is 65 years.

1.3 Describe the factors affecting the rate analysis.

[SSC JE - 2013 : 10 Marks]

Solution:

Factors affecting the analysis of rates:

(a) Location of work to be executed and its situation.

(b) Size and quantum of work.

(c) Nature of project.

(d) Specifications of work, quality requirements and construction methodology etc.

(e) Quantity of materials and their costs.

(f) Height/level of work at which it is being executed.

(g) Environmental and climatic conditions.

(h) Availability of water

(i) Miscellaneous factors like safety of personnel, local conditions etc.

1.4 Briefly explain

(i) Assessed value (ii) Sinking fund

[SSC JE - 2014 : 10 Marks]

Solution:

(i) **Assessed Value:** This term is used mainly for taxation purpose of an asset (like property). It is the value of the asset in monetary terms as determined by the Government or the urban local bodies (like Municipal Corporations) for calculation of taxes. This assessment is done on an annual basis. The factors which influence this assessed value are the location of the asset (in case of immovable property), market conditions etc.

(ii) **Sinking Fund:** It is a type of fund (or account) in which money is deposited on regular basis for a definite period of time so that by the time the fund matures, the accumulated amount can be used for the replacement of old equipment with a new one, or for repaying the loan principal etc.

■■■■

# Unit III Surveying

## 1. Fundamental Concepts of Surveying

1.1 A steel tape is 30 m long at a temperature of 15°C and a pull of 50 N when laid on a flat surface. The tape weighs 18 N. It is stretched between end supports only allowing it to sag. Find the correct length of the tape at a field temperature of 25°C at a pull of 115 N. If in the above condition a base line is measured and the recorded length of the line is 600 m, find the correct length of the base line. Take $\alpha = 12 \times 10^{-6}$ per °C and $E = 2 \times 10^5$ N/mm$^2$. Sectional area of the tape = 7.50 mm$^2$.

[SSC JE - 2010 : 14 Marks]

**Solution:**

Standard length of tape, $l_0 = 30$ m

Standard temperature, $T_0 = 15°C$

Standard pull, $P_0 = 50$ N

Total weight of tape, $W = 18$ N

Field temperature, $T = 25°C$

Applied pull, $P = 115$ N

Correction for pull, $$C_p = +\frac{(P-P_0)l_0}{AE} = +\frac{(115-50)30}{7.5\times2\times10^5} = +0.0013 \text{ m}$$

Correction for temperature, $$C_t = -\alpha\, l_0\,(T-T_0) = -12\times10^{-6}\times30\,(25-15) = -0.0036 \text{ m}$$

Correction for sag, $$C_s = -\frac{W^2 l_0}{24P^2} = -\frac{18^2\times30}{24\times115^2} = -0.0306 \text{ m}$$

$\therefore$ Total correction $= C_p + C_t + C_s = 0.0013 - 0.0036 - 0.0306 = -0.0329$ m

$\therefore$ Correct length of tape $= 30 - 0.0329 = 29.9671 \text{ m} \simeq 29.97$ m

Correct length of measured 600 m base line

$$= \frac{29.97}{30}\times600 = 599.4 \text{ m}$$

## 2. Theodolites, Compass and Traverse Surveying

2.1 True bearing of a TV tower ($T$) from station $A$ is 358° 00′ and its magnetic bearing was 8° 0′ 00″. Using prismatic compass, bearings of $AB$, $AC$ and $AD$ are 290° 00′ 00″, 340° 00′ 00″ and 30° 00′ 00″ respectively. Calculate true bearings of $AB$, $AC$ and $AD$.

[SSC JE - 2005 : 10 Marks]

Solution:

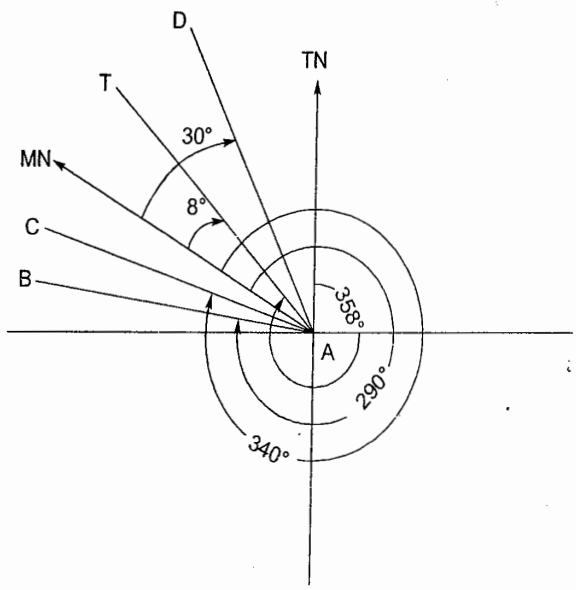


TN means True North

MN means Magnetic North

Magnetic declination = Angle between Tn and MN

= (360° – 358°) + 8° = 10° (Towards West)

= –10°

True bearing of *AB* = 290° – 10° = 280°

True bearing of *AC* = 340° – 10° = 330°

True bearing of *AD* = 360° – (10°) + 30° = 380° = 20°

**2.2 State the three point problem. Explain how it is solved.**

**[SSC JE - 2005 : 10 Marks]**

Solution:

**Three point problem:** It is one of the method of resection in plane table surveying. This method is used where the surveyor wants to set up a table at a station (say *P*) towards which no ray has been drawn when the plane table occupied other stations.

Three point problem can be solved if three well defined points *A*, *B* and *C* whose positions *a*, *b* and *c* has already been marked on the plan and which are clearly visible from the plane table station *P*. Three point problem can be solved by any of the following methods:

(a) Trial and error method (b) Mechanical method

(c) Graphical method (d) Analytical method

(e) Geometrical method

(a) **Trial and error method:** Here the correct orientation of plane table at station *P* is obtained by several trials. This trial and error method is also known as Lahmann's method.

(b) **Mechanical method:** Here the plane table is oriented at station *P* (whose location is required to be located) roughly by eye judgement or a compass. Then a point '$p_1$' is marked on the tracing sheet to represent *P*. With alidade pivoted at '$p_1$', sight the station A and draw a ray. Similarly sight other stations *B*, *C* etc. After that, unfasten the tracing cloth/paper and move it on the plan till all the rays pass through plotted points '*a*', '*b*' and '*c*'.

Place the alidade at '*p*' and turn the plane table till station A is bisected. This gives the correct orientation of plane table.

(c) **Graphical method:** Graphical method of three point problem is solved using Bessel's solution

2.3 A river is flowing from West to East. For determining the width of the river, two points $A$ and $B$ are selected on the Southern bank such that the distance $AB = 75$ m. Point $A$ is Westward. The bearings of a tree $C$ on the Northern bank are observed to be 38° and 338° respectively from $A$ and $B$. Calculate the width of the river.

[SSC JE - 2007 : 20 Marks]

Solution:

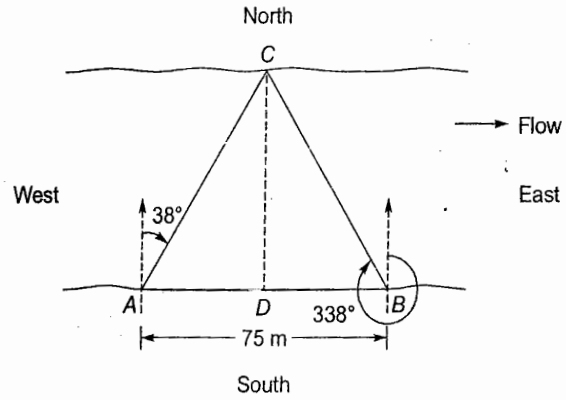


From $C$, draw $CD \perp AB$

$$\angle CAD = 90° - 38° = 52°$$

In $\Delta ADC$, $$\tan \angle CAD = \frac{CD}{AD}$$

$$\Rightarrow \quad AD = \frac{CD}{\tan 52°} \quad \text{...(i)}$$

$$\angle CBD = 338° - 270° = 68°$$

In $\Delta BDC$, $$\tan \angle CBD = \frac{CD}{DB}$$

$$\Rightarrow \quad DB = \frac{CD}{\tan 68°} \quad \text{...(ii)}$$

Adding (i) and (ii)

$$AD + DB = \frac{CD}{\tan 52°} + \frac{CD}{\tan 68°}$$

$$\Rightarrow \quad 75 = CD\left[\frac{1}{\tan 52°} + \frac{1}{\tan 68°}\right]$$

$$\Rightarrow \quad 75 = CD(1.1853)$$

$$\Rightarrow \quad CD = 63.275 \text{ m}$$

$$\therefore \quad \text{Width of river} = 63.275 \text{ m}$$

2.4 What are the various methods of doing theodolite traversing? Describe the deflection angle method in detail.

[SSC JE - 2007 : 10 Marks]

Solution:

Various methods of theodolite traversing are:

1. **Traversing by fast needle method**: It consists of the following methods:
   (a) Direct method with transiting
   (b) Direct method without transiting
   (c) Method of back bearing

2. Traversing by the method of included angles
3. Traversing by the method of direct angles
4. Traversing by the method of deflection angles

**Traversing by the method of deflection angles:** This method is mainly used for open traverse like survey of roads, railway line, canal etc.

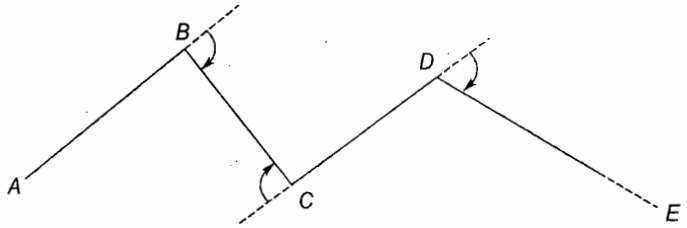


**Step 1:** Set up the theodolite at starting station (*A*) and level it. Measure the magnetic bearing of line *AB*.

**Step 2:** Shift the theodolite to station *B*. Set up the instrument and level it. Set the Vernier *A* of theodolite to zero using the upper clamp and tangent screw. Unclamp the lower plate and rotate the telescope to sight station *A*. Take back sight on staff held at station *A*.

**Step 3:** Plunge the telescope so that the telescope points along *AB* produced. Release the upper plate and turn the telescope to take a fore sight reading on staff held at station *C*. Read both the verniers. The deflection angle at station B is the mean of the two Vernier readings.

**Step 4:** Change to face right and again determine the deflection angle. The final deflection angle will be the average of the two readings obtained with face left and face right positions.

**Step 5:** Repeat Steps 1 to 4 at all other stations.

**Step 6:** Measure the lengths of traverse lines and locate other details.

**2.5 A chain line *CDE* crosses a river, *D* and *E* being on the near and distant banks respectively. A perpendicular *DF* 54.865 m long is set out at *D* on the left of the chain line. The respective bearings of *E* and *C* taken at *F* are 67° 30′ and 157° 30′. Find the chainage of *E*, given that *CD* is 27.630 m and the chainage of *D* is 382.52 m.**

[SSC JE - 2008 : 15 Marks]

Solution:

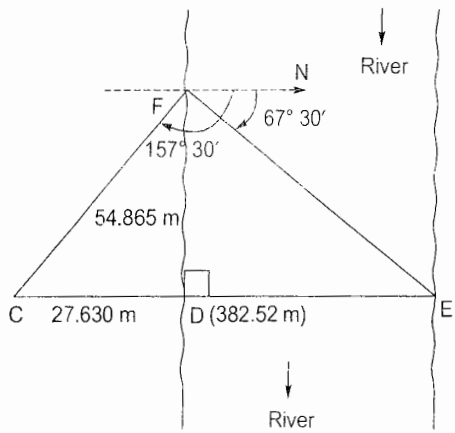


$\angle CFE$ = Bearing of $FC$ − Bearing of $FE$

= 157° 30′ − 67° 30′

= 90°

∴ $\Delta CFE$ is a right angle triangle right angled at $F$.

In $\Delta CDF$, $\angle CDF = 90°$

$\therefore$ $CF = \sqrt{CD^2 + DF^2} = \sqrt{(27.63)^2 + (54.865)^2} = 61.43$ m

$\therefore$ $\tan(\angle CFD) = \dfrac{CD}{FD} = \dfrac{27.63}{54.865} = 0.5036$

$\therefore$ $\angle CFD = \tan^{-1}(0.5036) = 26° 44'$ (approx)

$\therefore$ $\angle DFE = 90° - \angle CFD = 90° - 26° 44' = 63° 16'$

In $\Delta DFE$, $\tan(\angle DFE) = \dfrac{DE}{FD}$

$\Rightarrow$ $DE = FD \tan(\angle DFE) = 54.865 \tan(63° 16')$

$= 108.93$ m

$\therefore$ Chainage of $E$ = Chainage of $D + DE$

$= 382.52 + 108.93$

$= 491.45$ m

**2.6 Discuss in detail the methods of plane table surveying.**

**[SSC JE - 2009 : 15 Marks]**

**Solution:**

**Method of plane table surveying:**

(a) **Radiation:** Here the points are located by drawing radial lines from a plane table station.

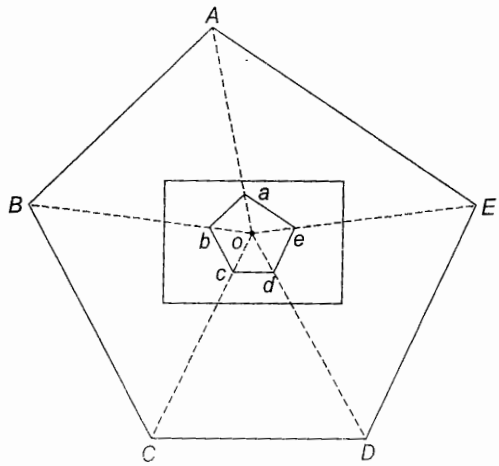


The distances of various points are measured and marked on the drawing sheet to some suitable scale. This method is very suitable for surveying small areas.

(b) **Intersection:** Here the point is located on the drawing sheet by drawing rays from two plane table stations to that point and locating the point of intersection of these two rays.

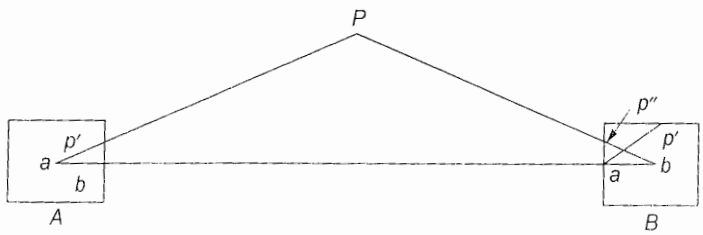


(c) **Resection:** It is the method of locating the station that is being occupied by the plane table.

Here the position of station that is being occupied by the instrument (i.e., plane table) is located with respect to the stations whose locations have already been plotted.

There are four methods of resection viz. compass method, back ray method, two-point problem and three-point problem. Within the three-point problem, there are several methods like the trial and error method, mechanical method, graphical method, analytical method, geometrical method etc.

**2.7 The true bearing of a tower *T* as observed from a station *A* was 357°, the magnetic bearing of the same was 9°. The back bearings of the lines *AB*, *AC* and *AD* were found to be 286°, 337° and 30° respectively when measured with a prismatic compass. Find the true bearings of the lines *AB*, *AC* and *AD* respectively.**

**[SSC JE - 2009 : 15 Marks]**

Solution:

*TN* means True North

*MN* means Magnetic North

Prismatic compass measures bearing with respect to *MN*.

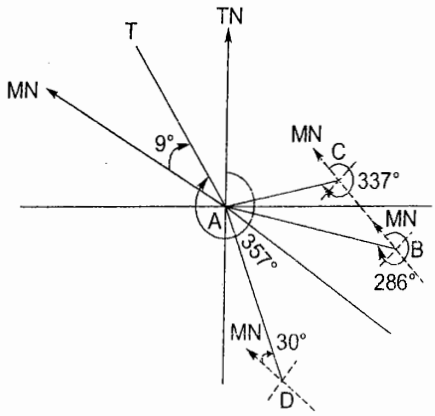


Magnetic declination = Angle between *TN* and *MN*

$= (360° - 357°) + 9°$

$= 12°$ (towards west) $= -12°$

*FB* of *AB* $= 180° - (360° - 286°) = 106°$

$\therefore$ True bearing of *AB* $= 106° - 12° = 94°$

*FB* of *AC* $= 180° - (360° - 337°) = 157°$

$\therefore$ True bearing of *AC* $= 157° - 12° = 145°$

*FB* of *AD* $= 180° + 30° = 210°$

$\therefore$ True bearing of *AD* $= 210° - 12° = 198°$

**2.8 Write brief notes on the following:**

**(i) Prismatic compass.**

**(ii) Plane table and its accessories.**

**[SSC JE - 2010 : 16 Marks]**

Solution:

(i) **Prismatic compass:** In prismatic compass, a prism is used for taking the observations. The prismatic compass is used for measuring Whole Circle Bearing (WCB). It consists of a circular box of brass or a non-metallic material. At the center of box there is a hard steel pivot on which magnetic needle rests. This magnetic needle is broad in the middle. An aluminium graduated ring is attached directly to the needle. The prismatic compass box is covered with a glass on the top. The graduations on the aluminium ring increase in the clockwise direction from 0° to 360° with 0° reading coinciding with the south end of the needle. The 90° graduation is towards the west, 180° towards north and 270° towards east. The figures are engraved on the aluminium ring. This prismatic compass is attached with a 45° prism with its horizontal and vertical faces slightly convex to magnify the image of the aluminium ring graduations.

(ii) Plane table and its accessories

**Plane table:** A plane table consists of a drawing board of a well-seasoned wood which is mounted on a tripod. The size of the plane table board is about 600 mm × 750 mm with thickness of about 20 mm.

**Alidade:** An alidade is a straight edged ruler with one edge beveled. It is provided with a sighting vane and object vane. It is used to orient the plane table at a station.

**Plumbing fork:** It is a U shaped metal piece the upper arm of which is pointed and at the lower arm, a plumb bob is attached. It is used for centering the plane table and for transferring the ground point to the plane table.

**Level tube:** Level tube is used for checking the level of plane table. When the bubble of the level tube is at the center then the table is properly leveled i.e. horizontal.

**Trough compass:** A trough compass is a magnetic compass and is used for orienting the plane table with respect to the direction of the magnetic meridian.

**Drawing sheet:** It is a simple thick paper which is fixed on to the drawing board by means of clips or tape. The drawing sheet must be thick enough to bear the abrasion of alidade while making the observations.

**2.9 Explain Whole Circle Bearing system. The following bearings were observed with a compass from the meridian. Calculate the interior angles.**

| Line | AB | BC | CD | DE | EA |
|---|---|---|---|---|---|
| Fore bearing | 60°30′ | 122°00′ | 46°00′ | 205°30′ | 300°00′ |

**[SSC JE - 2012 : 20 Marks]**

**Solution:**

**Whole circle bearing system:** In this system, the bearings are measured in clockwise direction. Thus whole circle bearing varies from 0° to 360°.

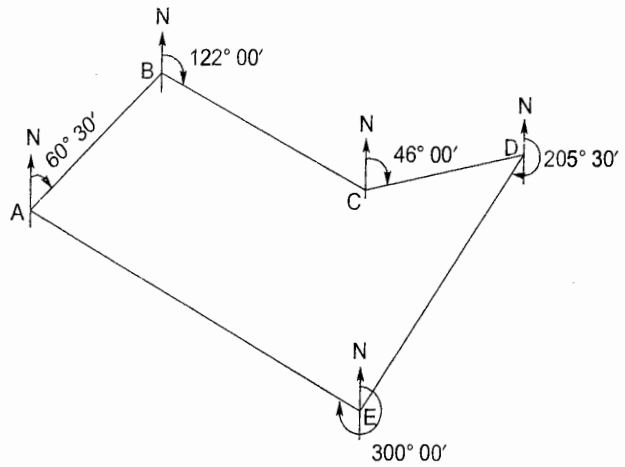


$BB$ of line $AB$ = 180° + 60° 30′ = 240° 30′

∴ Interior $\angle B$ = $BB$ of $AB$ – $FB$ of $BC$

= 240° 30′ – 122° 00′

= 118° 30′

$BB$ of line $BC$ = 180° + 122° = 302° 00′

∴ Interior $\angle C$ = $BB$ of $BC$ – $FB$ of $CD$

= 302° – 46°

= 256° 00′

$BB$ of line $CD$ = 180° + 46° = 226° 00′

∴ Interior $\angle D$ = $BB$ of $CD$ – $FB$ of $DE$

= 226° – 205° 30′

= 20° 30′

$BB$ of line $DF$ = 205° 30′ – 180°

= 25° 30′

∴ Interior $\angle E$ = (360° – 300°) + 25° 30′

= 85° 30′

$$BB \text{ of line } EA = 180° - (360° - 300°) = 120°$$

$$\therefore \quad \text{Interior } \angle A = BB \text{ of } EA - FB \text{ of } AB$$

$$= 120° - 60° 30'$$

$$= 59° 30'$$

Check: Sum of all the interior angles

$$= \angle A + \angle B + \angle C + \angle D + \angle E$$

$$= 59° 30' + 118° 30' + 256° + 20° 30' + 25° 30'$$

$$= 540°$$

$$= (n-2)\, 180° = (5-2)\, 180° = 540° \qquad \text{(OK)}$$

2.10 For a highway project, a straight tunnel is to be run between two points *P* and *Q* whose co-ordinates are given below:

| | Co-ordinates | |
|---|---|---|
| Point | *N* | *E* |
| *P* | 0 | 0 |
| *Q* | 4020 | 800 |
| *R* | 2110 | 1900 |

It is desired to sink a shaft at *S*, the mid-point of *PQ*. *S* is to be fixed from *R*, the third known point. Calculate:

(i) The co-ordinates of *S* (ii) The length of *RS* (iii) The bearing of *RS*

[SSC JE - 2013 : 5 Marks]

Solution:

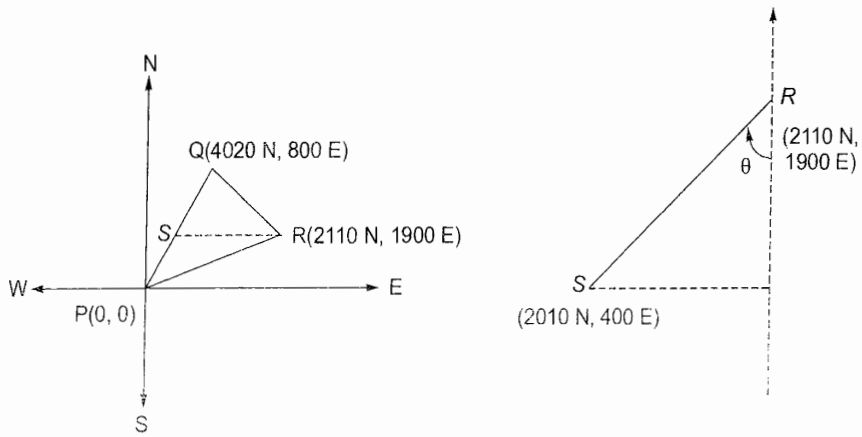


Given '*S*' is the mid-point of *PQ*.

$$\therefore \quad \text{Coordinates of point. } S \equiv \left(\frac{4020+0}{2}\text{N}, \frac{800+0}{2}\text{E}\right) \equiv (2010\text{ N}, 400\text{ E})$$

$$\text{Length } RS = \sqrt{(2010-2110)^2 + (400-1900)^2} = 1503.33 \text{ units}$$

$$\tan\theta = \frac{1900-400}{2110-2010} = \frac{1500}{100}$$

$$\therefore \quad \theta = 86.19°$$

$$\therefore \quad \text{Bearing of } RS = 180° + \theta = 266.19°$$

## 3. Levelling and Contouring

**3.1 What are contour gradients? Explain their importance in the location of a hill road.**

[SSC JE - 2007 : 10 Marks]

Solution:

**Contour gradient:** A contour gradient is a line on the surface of the ground having a constant inclination with the horizontal. e.g. A contour gradient of 1 in 50 will connect all points lying on a line inclined at $\tan^{-1}(1/50)$ with the horizontal.

While aligning a hill road, a pre-decided contour gradient will give the quantity of earthwork in cutting and filling. It gives an idea about the various points lying on the contour gradient.

**3.2 Define and explain contour, contour interval, necessity of contour plotting. Discuss factors affecting the choice of contour interval.**

[SSC JE - 2008 : 15 Marks]

Solution:

**Contour:** A contour is a line joining points of equal elevation on the ground. All the points lying on a contour will have equal elevation. e.g. A contour of 60.00m indicates that all points lying on this contour are having an elevation of 60 m.

**Contour interval:** It is the difference of elevations between two successive contours.

**Necessity of contour plotting:** Plotting of contours gives the topography of the area surveyed. It gives a general idea about the topographic features of the ground which is helpful in deciding the location or alignment of an infrastructure project.

**Factors affecting the choice of contour interval:** The following factors govern the choice of contour interval:

1. **Purpose of map:** The contour interval should be so selected that it serves the purpose of map. Too large contour interval may omit the necessary details of the map while a too small contour interval will add to the cost of the project.
2. **Nature of ground:** The contour interval depends on the nature of ground. For a flat ground, a large contour interval may serve the purpose but for mountainous terrain, a small contour interval is required.
3. **Scale of the map:** If the scale of the map is small, contour interval is kept large to avoid over-crowding of contours. However, if the map scale is large then contour interval is kept small.
4. **Extent of survey:** Contour interval largely depends on the extent of survey. For surveying a large area, a large contour interval is required but for a small area of survey, contour interval may be kept small.
5. **Availability of time and funds:** Too small contour interval will increase the survey work and thereby cost of the project. However, large contour interval will reduce the amount of time and cost.

**3.3 Describe the terms -True and magnetic bearing; local attraction; back bearings and magnetic declination.**

[SSC JE - 2012 : 20 Marks]

Solution:

**True bearing:** It is the bearing of a line which it makes with the true north (or south) i.e. true meridian.

**Magnetic bearing:** It is the bearing of the line which it makes with the magnetic north (or south) i.e. magnetic meridian.

**Local attraction:** [illegible] ferromagnetic articles like watch, belts etc. or a nearby current carrying [illegible] to deflect that area. This will change the magnetic meridian thereby changing the [illegible] This phenomenon is called as local attraction. However, due to local attraction, the [illegible] unaffected.

**Back bearing:** It is the bearing of the line against the direction of survey line. e.g. For a survey line *AB*, the bearing of line *AB* at station *A* is called as fore-bearing and bearing of line *BA* at station *B* is called as back-bearing of *AB*.

**Magnetic declination:** It is the angle which the magnetic meridian makes with the true meridian. If magnetic meridian is towards east of true meridian, then declination is referred to as *positive declination* and if magnetic bearing is towards west of true meridian then declination is referred to as *negative declination*.

**3.4 The readings given in the Table below were recorded in a levelling operation from points 1 to 10. Reduce the levels by the height of instrument method and apply appropriate checks. The point 10 is a bench mark having elevation of 66.374 m. Determine the loop closure.**

| Station | Chainage (m) | B.S. | *I. S.* | F.S. | Remarks |
|---|---|---|---|---|---|
| 1 | 2 | 0.597 | | | B.M. = 68.233 m |
| 2 | 20 | 2.587 | | 3.132 | C.P-1 |
| 3 | 40 | | 1.566 | | |
| 4 | 60 | | 1.911 | | |
| 5 | 80 | | 0.376 | | |
| 6 | 100 | 2.244 | | 1.522 | C.P-2 |
| 7 | 120 | | 3.771 | | |
| 8 | 140 | 1.334 | | 1.985 | C.P-3 |
| 9 | 160 | | 0.601 | | |
| 10 | 180 | | | 2.002 | |

[SSC JE - 2014 : 10 Marks]

**Solution:**

| Station | Chainage (m) | B.S.(m) | *I.S.* (m) | F.S.(m) | H.I.(m) | R.L.(m) | Remarks |
|---|---|---|---|---|---|---|---|
| 1 | 2 | 0.597 | | | 68.83 | 68.233 | B.M. |
| 2 | 20 | 2.587 | | 3.132 | 68.285 | 65.698 | C.P-1 |
| 3 | 40 | | 1.566 | | 68.285 | 66.719 | |
| 4 | 60 | | 1.911 | | 68.285 | 66.374 | |
| 5 | 80 | | 0.376 | | 68.285 | 67.909 | |
| 6 | 100 | 2.244 | | 1.522 | 69.007 | 66.763 | C.P-2 |
| 7 | 120 | | 3.771 | | 69.007 | 65.236 | |
| 8 | 140 | 1.334 | | 1.985 | 68.356 | 67.022 | C.P-3 |
| 9 | 160 | | 0.601 | | 68.356 | 67.755 | |
| 10 | 180 | | | 2.002 | 68.356 | 66.354 | |
| | Sum = | 6.762 | | 8.641 | | | |

Check:

$\Sigma BS - \Sigma FS = 6.762 - 8.641 = -1.879$ m

Last *RL* − First *RL* = 66.354 − 68.233 = −1.879 m (OK)

Given *RL* of station 10 = 66.374 m

But *RL* of station 10 as computed above = 66.354 m

∴ Closing error = +0.02 m

∴ Correction = −0.02 m

## 4. Tacheometric, Curve & Hydrographic Surveying

**4.1** A measuring staff is held at a distance of 100 m and 300 m from the axis of tacheometer. If the staff intercepts are 0.99 m and 3 m respectively, calculate the instruments constants.

Tacheometer is held at *A* and staff is kept upright at *B*. If at an angle of inclination of 10° readings are 2.670, 1.835, 1 m, what is the *RL* of *B* and distance between *A* and *B*? (Given that *HI* = 1.42 m, *RL* of *A* = 450.5 m)

[SSC JE - 2005 : 15 Marks]

**Solution:**

Let $D_1 = 100$ m, $D_2 = 300$ m, $S_1 = 0.99$ m, $S_2 = 3$ m

∴ For a tacheometer, $D = kS + C$ Where *k* and *C* are instrument constants

∴ $D_1 = kS_1 + C$

⇒ $100 = k(0.99) + C$ ...(i)

$D_2 = kS_2 + C$

⇒ $300 = k(3) + C$ ...(ii)

Solving eq. (i) and (ii)

$k = 99.5$

$C = 1.495$

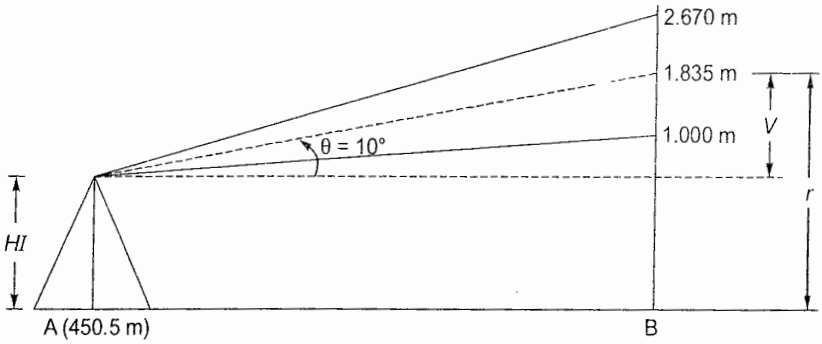


$HI = 1.42$ m

*RL* of $A = 450.5$ m

Vertical distance *V* is given by

$$V = \frac{1}{2}kS\cos 2\theta + C\sin\theta$$

$$= \frac{1}{2}(99.5)(2.670 - 1.00)\cos 20° + 1.495\sin 10°$$

$$= 78.33 \text{ m}$$

∴ $RL \text{ of } B = RL \text{ of } A + HI + V - r$

$= 450.5 + 1.42 + 78.33 - 1.835$

$= 528.415$ m

■■■■

# Unit IV Soil Mechanics

## 1. Properties, Classification of Soils, Consolidation and Compaction, Permeability

1.1 What is the main difference between compaction and consolidation?

[SSC JE - 2005 : 10 Marks]

Solution:

| S.No. | Compaction | Consolidation |
|---|---|---|
| 1. | It is the expulsion of air from the soil voids on application of external stress on the soil. | It is the expulsion of pore water from the soil voids on application of external stress on the soil. |
| 2. | It is a fast process. | It is slow process. |
| 3. | It occurs mostly in sands. | It occurs mostly in clays. |

1.2 What is compaction? Why is it needed? List the different methods of compaction.

[SSC JE - 2005 : 3+4+3 = 10 Marks]

Solution:

**Compaction:** It is a process in which the soil particles are brought close to each other due to expulsion of air from the voids present in the soil on application of an external stress. Thus the volume change in the soil is brought about by removal of air from the soil. It is almost an instantaneous process.

**Need for compaction:** Compaction, in general, increases the shear strength of soil due to more closer arrangement of soil particles. This in turn increases the stability and bearing capacity of soil.

**Different methods of compaction:**

(i) **Rollers:** Various types of rollers are used for compaction of soil. The selection of a particular type of roller depends on the contact pressure required, thickness of soil layer, number of passes required, speed of roller etc. Rollers may be smooth wheeled, pneumatic tyred or sheep foot rollers.

(ii) **Tampers:** Tamper (or rammer) is a block of iron about 3 to 5 kg in mass which is attached to a wooden/steel rod. The tamper is usually lifted to about 300 mm and dropped freely on to the soil thereby compacting the soil. Mechanical or machine operated rammers are much heavier (around 30 to 150 kg) and are also dropped from a larger height.

(iii) **Vibrators:** Vibrators or vibratory rollers bring about the compaction of soil by transmitting vibrations to the soil. Vibratory rollers are particularly useful for compacting sandy soils.

1.3 An earth embankment is compacted at water content of 17% to a bulk density of 1.9 g/cc. The specific gravity of soil grains is 2.65. Calculate the void ratio of the compacted embankment.

[SSC JE - 2007 : 10 Marks]

Solution:

Water content, $w = 17\% = 0.17$

Bulk density, $\gamma = 1.9$ g/cc

Specific gravity, $G = 2.65$

$$\gamma = \frac{(G+Se)\gamma_w}{1+e}$$

Also, $$e = \frac{wG}{S}$$

$\Rightarrow$ $$Se = wG$$

$\therefore$ $$\gamma = \frac{(G+wG)\gamma_w}{1+e}$$

$\Rightarrow$ $$1.9 = \frac{(1+0.17)2.65\times 1}{1+e}$$

$\Rightarrow$ $$e = 0.63$$

$\therefore$ Void ratio of compacted embankment = 0.63.

1.4 A particular sand sample of 250 grams, when sieved successively through the following sieves, left retention on the sieves as follows:

| IS sieve | 10 mm | 4.8 mm | 2.4 mm | 1.2 mm | 600 micron | 300 micron | 150 micron |
|---|---|---|---|---|---|---|---|
| Retention in grams | NIL | 10 | 15 | 50 | 50 | 75 | 50 |

What is its fineness modulus? What sand is it fine, medium or coarse?

[SSC JE - 2008 : 10 Marks]

Solution:

Total mass of sand sample = 10 + 15 + 50 + 50 + 75 + 50 = 250 grams

| IS Sieve | Mass of sand retained (g) | Cumulative mass of sand retained (g) | Cumulative percentage of sand retained (in %) |
|---|---|---|---|
| 10 mm | NIL | – | – |
| 4.8 mm | 10 | 10 | 4 |
| 2.4 mm | 15 | 25 | 10 |
| 1.2 mm | 50 | 75 | 30 |
| 600 micron | 50 | 125 | 50 |
| 300 micron | 75 | 200 | 80 |
| 150 micron | 50 | 250 | 100 |
| **Total** | **250** | **685** | **274** |

$\therefore$ $$\text{Fineness Modulus} = \frac{\Sigma_{\text{cumulative percentgage of sand retained on each sieve}}}{100}$$

$$= \frac{274}{100} = 2.74$$

Table: *Fineness modulus for different types of sand*

| Type of sand | Fineness modulus |
|---|---|
| Fine sand | 2.2 – 2.6 |
| Medium sand | 2.6 – 2.9 |
| Coarse sand | 2.9 – 3.2 |

$\because$ Fineness modulus (= 2.74) lies between 2.6 and 2.9.

$\therefore$ It is a medium sand.

1.5 A sample of dry soil having specific gravity of 2.74 and having a mass of 133.7 gm is uniformly dispersed in water to form 1000 cc of suspension.

(i) Determine the density of suspension immediately after it is prepared.

(ii) A 10 cc of the suspension was removed from the depth of 21 cm beneath the top surface after the suspension was allowed to stand for 2 min. and 30 sec. The dry mass of the soil in the sample drawn was found to be 0.406 gm. Determine one point on the grain-size distribution curve corresponding to this observation.

Temperature of suspension = 20°C

Viscosity of water at 20°C = 0.0102 poise

[SSC JE - 2008 : 15 Marks]

**Solution:**

Mass of dry soil, $M_s = 133.7$ g

Specific gravity of soil, $G = 2.74$

Volume of suspension, $V = 1000$ cc

(i) Density of suspension immediately after it has been prepared is given by,

$$\rho_i = \rho_w + \frac{M_s}{V}\left(\frac{G-1}{G}\right) = 1 + \frac{133.7}{1000}\left(\frac{2.74-1}{2.74}\right)$$

$$= 1.0849 \text{ g/cc} \simeq 1.085 \text{ g/cc}$$

(ii) Depth below the top water surface at which sample was taken i.e.,

$$H = 21 \text{ cm}$$

Time for which suspension was allowed to stand,

$$t = 2 \text{ min } 30 \text{ sec} = 2.5 \text{ min}$$

Dry mass of soil in the sample,

$$M_D = 0.406 \text{ g}$$

Viscosity of water, $\mu = 0.0102$ poise

$$= 0.0102 \times 10^{-1} \text{ Ns/m}^2$$

∴ Diameter of soil particle, $D = \sqrt{\dfrac{0.3\,\mu H}{g(G-1)\rho_w \cdot t}} = \sqrt{\dfrac{0.3 \times 0.00102 \times 21}{981(2.74-1) \times 1 \times 2.5}}$

$$= 0.001227 \text{ cm} = 0.01227 \text{ mm}$$

Now $\gamma_s = \dfrac{M_s}{V} = \dfrac{133.7}{1000} = 0.1337$ g/cc

$$\gamma_D = \frac{M_D}{V} = \frac{0.406}{10} = 0.0406 \text{ g/cc}$$

∴ Percentage finer, $N = \dfrac{\gamma_D}{\gamma_s} \times 100 = \dfrac{0.0406}{0.1337} \times 100 = 30.37\%$

∴ Co-ordinate of point on particle size distribution curve is

$$D, N = 0.01227 \text{ mm}, 30.37\%$$

1.6 60 cm diameter well is being pumped at a rate of 1360 litres/minute. Measurements in a nearby test well were made at the same time as follows. At a distance of 6 m from the well being pumped, the drawdown was 6 m, and at 15 m, the drawdown was 1.5 m. The bottom of the well is 90 m below the ground water table.

(i) Find out the coefficient of permeability.

(ii) If all the observed points were on the Dupuit curve, what was the drawdown in the well during pumping?

(iii) What is the specific capacity of the well?

(iv) What is the rate at which water can be drawn from this well?

[SSC JE - 2008 : 15 Marks]

**Solution:**

Diameter of well, $D_w = 60 \text{ cm} = 0.6 \text{ m}$

$\therefore$ Radius of well, $r_w = 30 \text{ cm} = 0.3 \text{ m}$

Discharge, $Q = 1360 \text{ lit./min.} = 0.0227 \text{ m}^3/\text{s}$

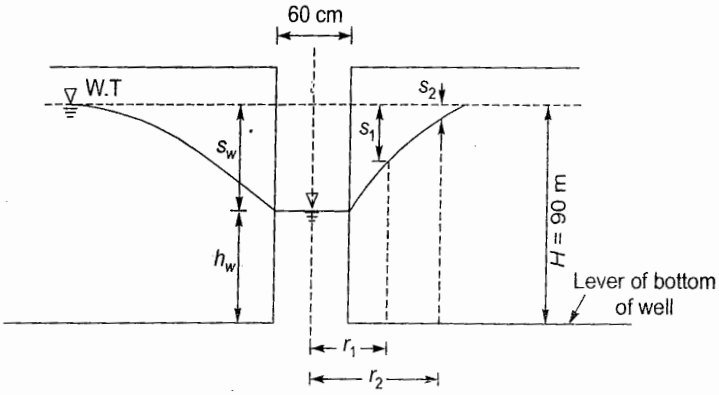


At $r_1 = 6$ m, $s_1 = 6$ m

At $r_2 = 15$ m, $s_2 = 1.5$ m

It is an unconfined aquifer

$$\therefore \quad \ln\left(\frac{r_2}{r_1}\right) = \frac{\pi k}{Q}\left(h_2^2 - h_1^2\right)$$

Here

$$h_2 = H - s_2 = 90 - 1.5 = 88.5 \text{ m}$$
$$h_1 = H - s_1 = 90 - 6 = 84 \text{ m}$$

$$\therefore \quad \ln\left(\frac{15}{6}\right) = \frac{\pi k}{0.0227}\left(88.5^2 - 84^2\right)$$

$$\Rightarrow \quad k = 8.53 \times 10^{-6} \text{ m/s} = 8.53 \times 10^{-3} \text{ mm/s}$$

Let $s_w$ = Drawdown in the well

$$\therefore \quad \ln\left(\frac{r_2}{r_w}\right) = \frac{\pi k}{Q}\left(h_2^2 - h_w^2\right)$$

$$\Rightarrow \quad \ln\left(\frac{15}{0.3}\right) = \frac{\pi k}{0.0227}\left(88.5^2 - h_w^2\right)$$

$$\Rightarrow \quad \ln\left(\frac{15}{0.3}\right) = \frac{\pi \times 8.53 \times 10^{-6}}{0.0227}\left(88.5^2 - h_w^2\right)$$

$$\Rightarrow \quad h_w = 67.22 \text{ m}$$

$$\therefore \quad s_w = H - h_w = 90 - 67.22 = 22.78 \text{ m}$$

Specific capacity = Discharge per unit drawdown at the well location

$$= \frac{Q}{s_w} = \frac{0.0227}{22.78} = 9.965 \times 10^{-4} \text{ m}^2/\text{s/m}$$

**1.7 A sample of soil has a porosity of 35 percent and specific gravity of solids is 2.67. Calculate void ratio, dry density and unit weight if**
**(i) the soil is 50% saturated. (ii) the soil is 100% saturated.**

**[SSC JE - 2009 : 15 Marks]**

**Solution:**

Porosity, $n = 35\% = 0.35$

Specific gravity of solids, $G = 2.67$

(i) Soil is 50% saturated i.e., $S = 0.5$

Void ratio, $e = \frac{n}{1-n} = \frac{0.35}{1-0.35} = \frac{7}{13} = 0.5385$

Now, $e = \frac{wG}{S}$

$\Rightarrow$ $w = \frac{eS}{G} = \frac{0.5385 \times 0.5}{2.67} = 0.1008$

Bulk density, $\gamma = \frac{(G+Se)\gamma_w}{1+e} = \frac{(2.67+0.5\times0.5385)9.81}{1+0.5385} = 18.74 \text{ kN/m}^3$

Dry density, $\gamma_d = \frac{\gamma}{1+w} = \frac{18.74}{1+0.1008} = 17.02 \text{ kN/m}^3$

(ii) Soil is 100% saturated i.e., $S = 1$

$\therefore$ $e = \frac{n}{1-n} = \frac{0.35}{1-0.35} = \frac{7}{13} = 0.5385$

Water content, $w = \frac{eS}{G} = \frac{0.5385 \times 1}{2.67} = 0.202$

Bulk density, $\gamma = \frac{(G+Se)\gamma_w}{1+e} = \frac{(2.67+1\times0.5385)9.81}{1+0.5385} = 20.46 \text{ kN/m}^3$

Dry density, $\gamma_d = \frac{\gamma}{1+w} = \frac{20.46}{1+0.202} = 17.02 \text{ kN/m}^3$

**Note:** $\gamma_d$ (dry density) in both cases is same as this value does not depend on $S$ (degree of saturation) it is calculated at $S = 0.1\%$)

1.8 A sample of soil is 5 cm high and 8 cm in diameter. It was tested in a constant head permeameter. Water percolates through the soil under a constant head of 45 cm for 8 min. The water was collected and weighed. Its weight was recorded as 500 gm. On oven drying the sample of soil, the weight was recorded as 450 gm. If $G$ is 2.65 calculate
(i) coefficient of permeability,
(ii) seepage velocity of water when the water was under operation.

[SSC JE - 2009 : 15 Marks]

Solution:

Constant head, $h = 45 \text{ cm} = 0.45 \text{ m}$

Time, $t = 8 \text{ min.} = 8 \times 60 \text{ sec} = 480 \text{ sec}$

Mass of water collected = 500 g

$\therefore$ Volume of water collected, $V = \frac{500g}{1 \text{ g/cc}} = 500 \text{ cc} = 500 \times 10^{-6} \text{ m}^3$

(i) Discharge through the soil, $q = \frac{500 \times 10^{-6} \text{m}^3}{480 \text{ sec}} = 1.0417 \times 10^{-6} \text{ m}^3/\text{s}$

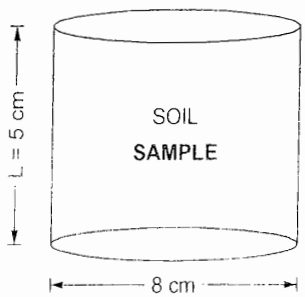

Coefficient of permeability, $k = \frac{qL}{Ah} = \frac{1.0417 \times 10^{-6} \times 0.05}{\frac{\pi}{4}(0.08)^2(0.45)}$ m/s $= 2.3 \times 10^{-5}$ m/s

(ii) Porosity of soil sample is needed for computation of seepage velocity

But seepage velocity, $v_s = \frac{v}{n}$

Also $v = ki$

$$= 2.3 \times 10^{-5} \times \left(\frac{h}{L}\right) = 2.3 \times 10^{-5} \times \left(\frac{0.45}{0.05}\right) = 20.7 \times 10^{-5} \text{ m/s}$$

Weight of over dried soil, $M_s = 450$ g

∴ Dry density of soil sample,

$$\rho_d = \frac{450}{\frac{\pi}{4}(8)^2(5)} = 1.79 \text{ g/cc}$$

But $\rho_d = \frac{G\rho_w}{1+e}$

⇒ $e = \frac{G\rho_w}{\rho_d} - 1 = \frac{2.65 \times 1}{1.79} - 1 = 0.48$

∴ Porosity, $n = \frac{e}{1+e} = \frac{0.48}{1+0.48} = 0.324$

∴ Seepage velocity, $v_s = \frac{v}{n} = \frac{20.7 \times 10^{-5}}{0.324} = 63.89 \times 10^{-5}$ m/s

$= 6.4 \times 10^{-4}$ m/s

**1.9 An embankment was compacted at a moisture content of 15%. Its density was determined with the help of a core cutter and the following data was collected:**
**Empty weight of the cutter = 1200 gm**
**Weight of cutter when it is full of soil = 3200 gm**
**Volume of the cutter = 1000 cc**
**Calculate bulk density and saturation percentage of the embankment. If the embankment becomes fully saturated due to rains, then, determine its moisture content and saturated density. Take $G = 2.70$.**

[SSC JE - 2009 : 20 Marks]

Solution:

Water content, $w = 0.15$

Weight of empty cutter = 1200 g

Weight of cutter filled with soil = 3200 g

∴ Weight of soil = 3200 – 1200 = 2000 g

Volume of cutter = 1000 cc

∴ Bulk density of soil, $\rho = \frac{\text{Weight of soil}}{\text{Volume of soil}} = \frac{2000}{1000} = 2.0$ g/cc

$G = 2.7$

Now, $\rho = \frac{(G + Se)\rho_w}{1+e}$

$$\Rightarrow \quad 2 = \frac{(G+wG)1}{1+e} \qquad (\because wG = eS)$$

$$\Rightarrow \quad 2 = \frac{2.7(1+0.15)}{1+e}$$

$$\Rightarrow \quad e = 0.5525$$

$$\therefore \quad S = \frac{wG}{e} = \frac{0.15\times 2.7}{0.5525} = 0.733 \text{ or } 73.3\%$$

Now embankment gets fully saturated i.e., $S = 1$

$$\therefore \quad w = \frac{eS}{G} = \frac{0.5525\times 1}{2.7} = 0.2046 \text{ or } 20.46\%$$

$$\rho_{sat} = \frac{(G+Se)\rho_w}{1+e} = \frac{(2.7+1\times 0.5525)\times 1}{1+0.5525} = 2.095 \text{ g/cc}$$

**1.10 The following properties of the soil were determined by performing tests on clay sample.**
**Natural moisture content = 25%**
**Liquid limit = 32%**
**Plastic limit = 24%**
**Diameter of 60% size = 0.006 mm**
**Diameter of 10% size = 0.006 mm**
**Calculate the liquidity coefficient, uniformity coefficient and relative consistency.**

**[SSC JE - 2010 : 15 Marks]**

Solution:

Natural moisture content, $w = 0.25$

Liquid limit ($LL$), $w_L = 0.32$

Plastic limit ($PL$), $w_P = 0.24$

Diameter of 60% size i.e., plastic size such that 60% soil is finer than this size ($D_{60}$) = 0.006 mm

Diameter of 10% size i.e., plastic size such that 10% soil is finer than this size ($D_{10}$) = 0.006 mm

$\therefore$ Uniformity coefficient, $C_u = \frac{D_{60}}{D_{10}} = \frac{0.006}{0.006} = 1 < 2$

[Soils with $C_u < 4$ are considered to be poorly graded or uniform soil $C_u > 4$ to 6 are well graded soils.]

$\therefore$ Soil is uniform soil i.e., poorly graded

Liquidity index, $I_L = \frac{w - w_P}{w_L - w_p}\times 100 = \frac{0.25-0.24}{0.32-0.24}\times 100 = 12.5\%$

Consistency index or relative consistency,

$$I_c = \frac{w_L - w}{w_L - w_P}\times 100 = \frac{0.32-0.25}{0.32-0.24}\times 100 = 87.5\%$$

1.11 A sample of soil 10 cm diameter, 15 cm length was tested in a variable head permeameter. The initial head of water in the burette was found to be 45 cm and it was observed to drop to 30 cm in 195 seconds. The diameter of the burette was 1.9 cm. Calculate the coefficients of permeability in metre/day.

[SSC JE - 2010 : 15 Marks]

Solution:

$d$ = 10 cm = 0.1 m, $L$ = 15 cm = 0.15 m

$\therefore$ Cross-sectional area of soil sample,

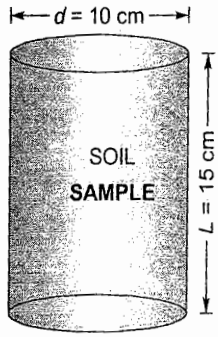


$$A = \frac{\pi}{4}d^2 = \frac{\pi}{4}(0.1)^2 = 0.007854 \text{ m}^2$$

Initial head, $h_1 = 45$ cm

Final head, $h_2 = 30$ cm

Time interval, $\Delta t = 195$ sec

Diameter of burette $= 1.9 \text{ cm} = 1.9 \times 10^{-2}$ m

∴ Area of burette, $a = \frac{\pi}{4}\left(1.9 \times 10^{-2}\right)^2 = 2.835 \times 10^{-4} \text{ m}^2$

Coefficient of permeability, $k = \frac{aL}{At}\ln\left(\frac{h_1}{h_2}\right) = \frac{2.835 \times 10^{-4} \times 0.15}{0.007854 \times 195}\ln\left(\frac{45}{30}\right)$

$= 0.11258 \times 10^{-4}$ m/s $= 0.9727$ m/day

**1.12 Explain standard penetration test for measuring the penetration resistance of the soil.**

**[SSC JE - 2010 : 12 Marks]**

**Solution:**

**Standard Penetration Test:** It is an in-situ test that is particularly useful for cohesionless soil (i.e. sand) because undisturbed sampling of cohesionless soil is difficult. This test is used to assess the bearing capacity, shear strength, the angle of internal friction of the soil. It can also be used to determine the unconfined compressive strength of cohesive soils.

- This test is conducted in a bore hole using a split spoon sampler. The bore hole is drilled to the required depth and sampler is lowered to the bottom of the bore hole.
- The sampler is then driven into the soil by a hammer of 63.5 kg mass falling from a height of 750 mm at the rate of 30 blows per minute.
- The number of hammer blows required to drive the sampler 150 mm through the ground is counted.
- The sampler is again driven further by 150 mm and the number of blows is counted.
- Once again the sampler is driven further 150 mm into the ground and number of blows is counted.
- The number of blows for the first 150 mm is discarded.
- The number of blows for the last two 150 mm are added which gives the standard penetration number (N).
- Thus standard penetration number is equal to the number of blows required for 300 mm penetration beyond the first 150 mm penetration.
- If the number of blows for the first 150 mm penetration exceeds 50 then the test results are discarded and the test is stopped.

This standard penetration number (N) is corrected for dilatancy and overburden pressure.

**Correction for dilatancy:** Very fine silty sand and also the fine sand develop pore water pressure which does not get dissipated easily. This pore water pressure increases the resistance of soil against the hammer blow and hence standard penetration number ($N$) gets increased which otherwise should be less than this value.

When $N > 15$, the corrected $N$ value for dilatancy is,

$$N_c = 15 + 0.5(N - 15)$$

where N = Recorded N value

If $N \leq 15$ then,

$$N_c = N$$

**Correction for overburden pressure:** The overburden pressure on soil affects the penetration resistance of soil, particularly in cohesionless soils. The confining pressure in cohesionless soil increases with depth and thus the penetration resistance measured at shallow depths gets underestimated and at greater depths, it gets overestimated. Thus *N* value obtained in the field under various overburden pressures is corrected to a standard effective overburden pressure. Thus corrected N value for overburden pressure is given by,

$$N_c = 350N/(\sigma_o + 70)$$

where $\sigma_o$ = Effective overburden pressure (in kN/m$^2$) $\leq$ 280 kN/m$^2$

**1.13 An earthen embankment is compacted to a dry density of 1.82 gm/cc at a moisture content of 12%. The bulk density and moisture content are 1.72 gm/cc and 6% at the site from where the soil is borrowed, and transported at the site of construction. How much excavation should be carried out in the pit of borrow area for each cu-m of the embankment?**

[SSC JE - 2010 : 18 Marks]

**Solution:**

Dry density of embankment soil,

$$\rho_d = 1.82 \text{ g/cc}$$

Water content of embankment soil,

$$w = 0.12$$

Volume of embankment soil, $V = 0.1 \text{ m}^3$

Bulk density of borrow pit soil, $\rho = 1.72$ g/cc

Water content of borrow pit soil, $w = 0.06$

**For embankment soils:**

Dry density, $\rho_d = \dfrac{m_s}{V}$

$\Rightarrow$ $1.82 = \dfrac{m_s}{1\times 10^6 \text{ cm}^3}$

$\Rightarrow$ $m_s = 1.82 \times 10^6$ g

Water content, $w = \dfrac{m_w}{m_s}$

$\Rightarrow$ $m_w = 0.2184 \times 10^6$ grams

$\because$ Mass of soil solids is constant.

$\therefore$ Mass of soil solids to be excavated from borrow pit = $1.82 \times 10^6$ grams

**For borrow pit:**

Given bulk density of borrow pit, $\rho = 1.72 \text{ g/cc} = \dfrac{m}{V}$ where $m = m_s + m_w$

But, dry density $\rho_d = \dfrac{\rho}{1+w} = \dfrac{1.72}{1+0.06} = 1.62$ g/cc

But $\rho_d = \dfrac{m_s}{V}$

$\Rightarrow$ $V = \dfrac{m_s}{\rho_d} = \dfrac{1.82\times 10^6}{1.62}$ cc $= 1.123 \times 10^{6}$ cc $= 1.123$ m$^3$

$\therefore$ 1.123 m$^3$ of soil is required to be excavated per m$^3$ of embankment soil.

1.14 In a consolidation test on a soil, the void ratio of the sample decreases from 1.24 to 1.12 when the pressure is increased from 20 to 40 tonnes/ sq.m. Calculate the coefficient of consolidation in $m^2$/year, given that the coefficient of permeability of the soil during this pressure increment is $8.5 \times 10^{-3}$ cm/sec.

[SSC JE - 2011 : 15 Marks]

Solution:

Initial void ratio, $e_0 = 1.24$

Final void ratio, $e_f = 1.12$

$\therefore$ Change in void ratio, $\Delta e = e_0 - e_f$

$= 1.24 - 1.12 = 0.12$

Change in pressure (stress), $\Delta\sigma = \sigma_f - \sigma_o = 40 - 20 = 20 \text{ ton/m}^2$

Coefficient of consolidation, $c_v = \dfrac{k}{\gamma_w m_v}$

Here, $m_v = \dfrac{a_v}{1+e_0}$

$$a_v = \frac{\Delta e}{\Delta\sigma} = \frac{0.12}{20 \text{ ton/m}^2} = 6\times10^{-3} \text{ m}^2/\text{ton}$$

$$\therefore \quad m_v = \frac{a_v}{1+e_0} = \frac{6\times10^{-3}}{1+1.24} = 2.679\times10^{-3} \text{ m}^2/\text{ton}$$

$$\therefore \quad c_v = \frac{k}{\gamma_w m_v} = \frac{8.5\times10^{-3}\times10^{-2} \text{ m/s}}{(1 \text{ g/cc})2.679\times10^{-3} \text{ m}^2/\text{ton}}$$

$$= \frac{8.5\times10^{-5} \text{ m/s}}{(1 \text{ ton/m}^2)2.679\times10^{-3} \text{ m}^2/\text{ton}}$$

$$= \frac{8.5\times10^{-5}}{2.679\times10^{-3}} \text{ m}^2/\text{s} = 0.03173 \text{ m}^2/\text{s}$$

$$= 0.03173 \times 3600 \times 24 \times 365 \text{ m}^2/\text{year}$$

$$= 1\times10^{-6} \text{ m}^2/\text{year}$$

1.15 Write a short note on the significant properties of soil.

[SSC JE - 2011 : 10 Marks]

Solution:

**Properties of soil:** The various properties of soil depend on the type of soil. Basically there are two types of soil viz. *cohesive soil* and *cohesionless soil.*

**Cohesionless soil:** This type of soil does not possess any cohesion and its shear strength is due to internal friction only. Sand falls under this category.

- This soil usually possess good drainage property and its bearing capacity gets improved by vibration.
- The phenomenon of consolidation is not observed in this type of soil. This soil has the tendency of undergoing liquefaction.
- This soil generally has high bearing capacity if properly compacted and long term settlement of footing founded on this soil is not a problem.
- Undisturbed sampling of this soil is difficult.

**Cohesive soil:** This soil in addition to internal friction also has cohesion between the particles. Thus shear strength of this soil is due to both internal friction and cohesion between the soil particles.

- Clay falls under this category.
- This type of soil undergoes consolidation and does not have the tendency for liquefaction.
- Some of the index properties of cohesive soils are plastic limit, liquid limit, plasticity index, consistency index, shrinkage limit, shrinkage ratio, activity etc.
- Footing founded on this type of soil has to be checked for long term settlement of soil.
- Undisturbed sampling of this soil is not so much difficult.

**1.16 Find out the time required for 50% consolidation in a soil having thickness of 800 cm and pervious strata at top and bottom. What will be the value of coefficient of consolidation if coefficient of permeability is 0.0000001 cm/sec?**
**Void ratio = 1.8, $m_v$ = 0.0003 cm²/gm, $\gamma_w$ = 1 gm/cc**

**[SSC JE - 2013 : 15 Marks]**

Solution:

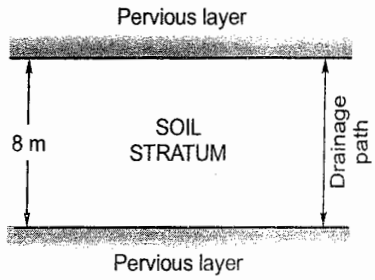


Thickness of soil stratum = 800 cm = 8 m

∵ Soil is pervious at top and bottom

∴ Length of drainage path $= \frac{8}{2} = 4$ m = 400 cm

Coefficient of permeability, $k = 1 \times 10^{-7}$ cm/s

Void ratio, $e = 1.8$

$m_v = 3 \times 10^{-4}$ cm²/g

Unit weight of water, $\gamma_w = 1$ g/cc

Coefficient of consolidation, $c_v = \frac{k}{\gamma_w m_v} = \frac{1\times10^{-7}\text{ cm/s}}{(1\text{ g/cc})(3\times10^{-4}\text{ cm}^2/\text{g})} = 0.333\times10^{-3}\text{ cm}^2/\text{s}$

Time factor for 50% consolidation,

$$T_v = \frac{\pi}{4}U^2 \text{ for } U \le 60\%$$

$$= \frac{\pi}{4}(0.5)^2 = 0.196$$

But, $T_v = \frac{c_v t}{d^2}$

$$\Rightarrow \quad t = \frac{T_v d^2}{c_v} = \frac{0.196\times(400)^2}{0.333\times10^{-3}}$$

$= 94.174 \times 10^6$ sec

= 2 years 10 months 25 days 1 hour 8.6 min.

**1.17 A soil sample in its natural state, when fully saturated, has a water content of 32.5%. Determine the void ratio, dry and total unit weight. Calculate the total weight of water required to saturate a soil mass of volume 10 m³. Assume $G_s$ = 2.69.**

[SSC JE - 2014 : 10 Marks]

Solution:

∵ Soil is fully saturated.

∴ $S = 1$

Given water content. $w = 32.5\% = 0.325$

Volume of soil, $V = 10\ m^3$

$G_s = 2.69$

Void ratio, $e = \dfrac{wG_s}{S} = \dfrac{0.325 \times 2.69}{1} = 0.87$

Dry unit weight, $\gamma_d = \dfrac{G_s \gamma_w}{1+e} = \dfrac{2.69 \times 9.81}{1+0.87} = 14.11\ kN/m^3$

Bulk unit weight, $\gamma = \gamma_d (1 + w)$

$= 14.11\ (1 + 0.325) = 18.7\ kN/m^3$

Alternatively, $\gamma = \dfrac{(G_s + Se)\gamma_w}{1+e} = \dfrac{(2.69 + 1 \times 0.87)9.81}{1+0.87} = 18.7\ kN/m^3$

(which is same as above)

Now it is required to fully saturate 10 m³ of soil

$\therefore \quad e = \dfrac{wG}{S}$

$\Rightarrow \quad w = \dfrac{eS}{G} = \dfrac{0.87 \times 1}{2.69} = 0.3234$

Weight of solids in 10 m³ of soil ($W_s$) = $\gamma_d V = 14.11 \times 10 = 141.1$ kN

$\because \quad w = 0.3234 = \dfrac{W_w}{W_s}$

$\Rightarrow \quad W_w = 0.3234 \times 141.1 = 45.63$ kN

$\therefore$ Mass of water required $= \dfrac{45.63}{9.81} \times 10^3$ kg = 4651.4 kg

Thus 4651.4 kg (or 4.651 m³) of water is required to fully saturate the soil.

## 2. Earth Pressure Theory, Stability Analysis of Slopes, Soil Stabilization and Exploration & Foundation Engineering

**2.1 Under a tri-axial test, a soil sample fails at cell pressure of 60 kN/m². If effective soil parameters are $c' = 15$ kN/m² and $\phi' = 20°$. Calculate shear strength of soil.**

[SSC JE - 2005 : 15 Marks]

Solution:

Cell pressure, $\sigma_3 = 60\ kN/m^2$

Effective cohesion, $c' = 15\ kN/m^2$

$\phi' = 20°$

Let $\sigma_d$ = Deviator stress

$\therefore \quad \sigma_1 = (\sigma_3 + \sigma_d)$

From Mohr-Coulomb's equation

$\sigma_1 = c' + \sigma_3 \tan \phi'$

$= 15 + 60 \tan 20°$

$= 36.84\ kN/m^2$

$\therefore$ Shear strength of the soil = 36.84 kN/m²

2.2 Three different, homogeneous layers of soil sample have permeabilities $8 \times 10^{-6}$, $50 \times 10^{-6}$ and $15 \times 10^{-6}$ cm/sec and thicknesses 6, 3 and 12 m respectively. Determine the average permeability in horizontal and vertical direction.

[SSC JE - 2005 : 15 Marks]

Solution:

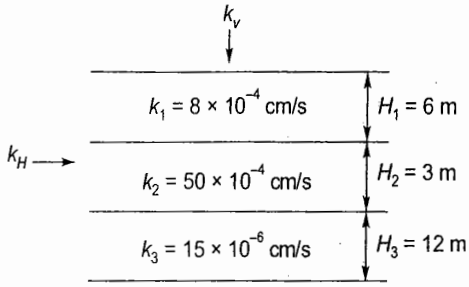


Average permeability in vertical direction,

$$k_v = \frac{k_1H_1 + k_2H_2 + k_3H_3}{H_1 + H_2 + H_3}$$

$$= \frac{8\times10^{-4}\times6 + 50\times10^{-4}\times3 + 0.15\times10^{-4}\times12}{6+3+12}$$

$$= 9.514 \times 10^{-4} \text{ cm/s}$$

Average permeability in horizontal direction,

$$k_H = \frac{H_1 + H_2 + H_3}{\frac{H_1}{k_1} + \frac{H_2}{k_2} + \frac{H_3}{k_3}} = \frac{6+3+12}{\frac{6}{8\times10^{-4}} + \frac{3}{50\times10^{-4}} + \frac{12}{0.15\times10^{-4}}}$$

$$= 0.2599 \times 10^{-4} \text{ cm/s}$$

$$\simeq 0.26 \times 10^{-4} \text{ cm/s}$$

2.3 A 10 m thick bed of sand is underlain by a layer of clay 6 m thick. The water table that was originally at ground level is lowered by drainage to a depth 4 m, whereupon the degree of saturation above lowered water table reduces to 20%. Determine the increase in effective pressure at mid of clay layer due to water table lowering. Given saturated densities of sand and clay as 2.1 g/cm$^3$ and 1.8 g/cm$^3$, and the dry density of sand = 1.7 g/cm$^3$.

Note: [g/cm$^3$ = 10$^3$ kg/m$^3$ × 9.8 m/s$^2$ = 9.81 kN/m$^3$]

[SSC JE - 2007 : 20 Marks]

Solution:

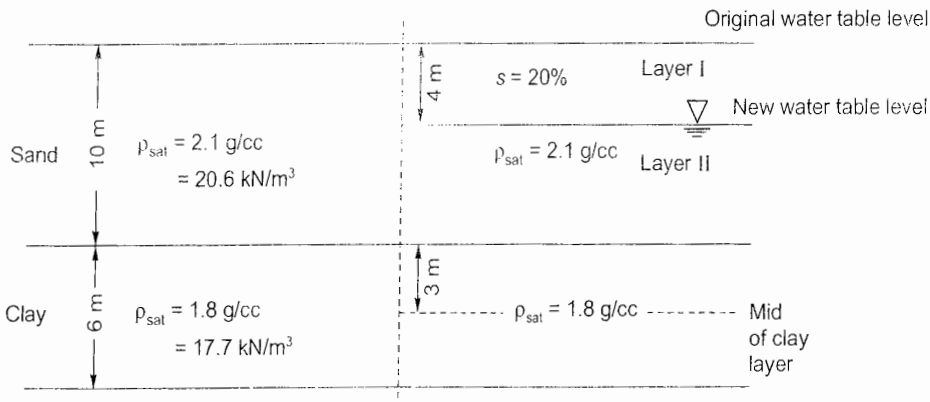


At mid of clay layer

Total stress, $\sigma = 20.6 \times 10 + 17.7 \times 3 = 259.1$ kN/m$^2$

Pore water pressure, $\mu = 13 \times \gamma_w = 13 \times 9.81 = 127.53$ kN/m$^2$

∴ Effective stress, $\sigma' = \sigma - \mu = 259.1 - 127.53 = 131.57$ kN/m$^2$

Given dry density of sand, $\gamma_d = 1.7$ g/cc = 16.7 kN/m$^3$

Density of sand in layer I needs to be determined which is computed as

$$\rho_{sat} = \frac{(G+e)\gamma_w}{1+e} \qquad (\because s = 1)$$

$$\Rightarrow \quad 20.6 = \frac{(G+e)9.81}{1+e}$$

$$\frac{G+e}{1+e} = 2.1 \qquad ...(i)$$

$$\gamma_d = \frac{G\gamma_w}{1+e}$$

$$16.7 = \frac{G \times 9.81}{1+e}$$

$$\Rightarrow \quad \frac{G}{1+e} = 1.7 \qquad ...(ii)$$

From (i) and (ii)

$$e = \frac{2}{3} = 0.67$$

$$G = 2.839$$

$\therefore$ Density of sand in layer $I$, $\rho = \frac{(G+Se)\rho_w}{1+e} = \left(\frac{2.839+0.2\times0.67}{1+0.67}\right)9.81 = 17.5$ kN/m$^3$

After lowering of water table at mid of clay layer,

Total stress, $\sigma = (17.5 \times 4) + (20.6 \times 6) + (17.7 \times 3) = 246.7$ kN/m$^2$

Pore water pressure, $\mu = (6 + 3)\rho_w = 9 \times 9.81 = 88.29$ kN/m$^2$

$\therefore$ Effective stress, $\sigma' = \sigma - \mu = 246.7 - 88.29 = 158.4$ kN/m$^2$

$\therefore$ Increase in effective stress = 158.4 – 131.57 = 26.83 kN/m$^2$

**2.4 What soil investigations are required for construction of (i) an embankment and (ii) a building? Give details.**

**[SSC JE - 2007 : 10 Marks]**

**Solution:**

Soil investigations required for construction of an embankment:

(i) Bearing capacity of the soil on which embankment is required to be constructed.

(ii) Seepage properties of the soil on which embankment is proposed to be constructed.

(iii) Slope stability characteristics of the soil.

(iv) Erosion control measures required on the embankment slope.

(v) Load expected on the embankment i.e. whether the embankment is for road traffic or is for a railway track.

(vi) Consolidation characteristics of the soil and the ultimate settlement expected in the embankment soil.

(vii) Geometry of the proposed embankment and shear strength ($c$, $\phi$) characteristics of the soil.

(viii) Water table level in the embankment.

Soil investigation required for construction of a building:

(i) Bearing capacity of the soil.

(ii) Shear strength ($c$, $\phi$) characteristics of the soil.

(iii) Water table level at the location of building foundation.

(iv) Consolidation characteristics of the soil and ultimate settlement expected.
(v) Load expected on the soil.
(vi) Liquefaction potential of the soil.

2.5 A direct shear box test performed on a remoulded sand sample yielded the following observations at the time of failure.
Normal load = 0.36 kN
Shear load = 0.18 kN
The sample area was 36 cm$^2$
Determine:
(i) the angle of internal friction,
(ii) the magnitude and direction of the principal stresses in the zone of failure , and
(iii) the magnitude of maximum deviator stress if a sample of the same sand with the same void ratio were tested in a tri-axial test with an all round pressure of 60 kN/m$^2$. Assume $C = 0$.

[SSC JE - 2008 : 18 Marks]

Solution:

Normal load, $N = 0.36$ kN

Shear load, $T = 0.18$ kN

Area of soil sample, $A = 36 \text{ cm}^2 = 3600 \text{ mm}^2$

$\therefore$ Normal stress, $$\sigma = \frac{N}{A} = \frac{0.36 \times 10^3}{3600} = 0.1 \text{ N/mm}^2$$

Shear stress, $$\tau = \frac{T}{A} = \frac{0.18 \times 10^3}{3600} = 0.05 \text{ N/mm}^2$$ (Given $c = 0$)

(i) Now $\tau = \sigma \tan\phi$

$\Rightarrow$ $0.05 = 0.1 \tan\phi$

$\Rightarrow$ $\tan\phi = 0.5$

$\Rightarrow$ $\phi = 26.57°$

(ii) Principal stresses $p_1$ and $p_2$ are given by,

$$p_{1,2} = \frac{\sigma}{2} \pm \sqrt{\left(\frac{\sigma}{2}\right)^2 + \tau^2}$$

$$\Rightarrow \quad p_{1,2} = \frac{0.1}{2} \pm \sqrt{\left(\frac{0.1}{2}\right)^2 + (0.05)^2}$$

$\therefore$ $p_1 = 0.1207$ N/mm$^2$ (Compressive)

and $p_2 = -0.0207$ N/mm$^2$ (Tensile)

The angle which the failure plane makes with the major principal plane is

$$\theta = 45° + \frac{\phi}{2} = 45° + \frac{26.57°}{2} = 58.3°$$

(iii) Normal stress at failure, $\sigma_1 = 0.1$ N/mm$^2$

But $\sigma_1 = \sigma_d + \sigma_c$

where $\sigma_d$ = Deviator stress, $\sigma_c$ = All round cell pressure = 60 kN/m$^2$ = 0.06 N/mm$^2$

$\therefore$ $\sigma_1 = \sigma_d + \sigma_c$

$\Rightarrow$ $0.1 = \sigma_d + 0.06$

$\Rightarrow$ $\sigma_d = 0.04$ N/mm$^2$

$\therefore$ Deviator stress = 0.04 N/mm$^2$

2.6 A 2.2 m square footing is located at a depth of 4.4 m in a stiff clay of saturated unit weight 21 kN/m³. The undrained strength of clay at a depth of 4.4 m is given by parameter $c$ = 120 kN/m² and $\phi_u$ = 0. For a factor of safety 3, with respect to shear failure, compute (i) the net value of bearing capacity, and (ii) and the value of maximum load that could be carried by the footing.

[SSC JE - 2008 : 12 Marks]

**Solution:**

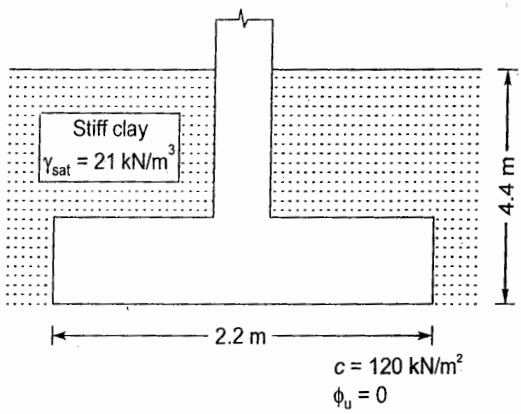


Size of square footing = 2.2 m × 2.2 m

∴ $B$ = 2.2 m

Depth of footing, $D_f$ = 4.4 m

Saturated unit weight of soil, $\gamma_{sat}$ = 21 kN/m³

Cohesion, $c$ = 120 kN/m²

$\phi_u$ = 0

Factor of safety, FOS = 3

Ultimate bearing capacity of square footing is given by

$$q_u = 1.2\,cN_c + qN_q + 0.4\,B\gamma N_\gamma$$

∵ Bearing capacity factors $N_c$, $N_q$ and $N_\gamma$ are not given and thus these are required to be calculated.

Passive earth pressure coefficient,

$$k_p = \frac{1+\sin\phi_u}{1-\sin\phi_u} = \frac{1+0}{1-0} = 1$$

∴
$$N_\gamma = \frac{1}{2}\tan\phi_u\left(\frac{k_p}{\cos^2\phi_u} - 1\right)$$

$$= 0 \qquad (\because \phi_u = 0)$$

$$a = \exp\left(\frac{3\pi}{4} - \frac{\phi_u}{2}\right)\tan\phi_u = e^{\left(\frac{3\pi}{4}-\frac{\phi_u}{2}\right)\tan\phi_u} = e^0 = 1$$

∴
$$N_q = \frac{a^2}{2\cos^2\left(\frac{\pi}{4}+\frac{\phi_u}{2}\right)} = \frac{1}{2\cos^2\left(\frac{\pi}{4}\right)} = 1$$

For $\phi_u = 0$, $N_c = 5.7$

∴
$$q_u = 1.2\,cN_c + qN_q + 0.4\,B\gamma N_\gamma$$
$$= 1.2(120)(5.7) + (21)(4.4)(1) + 0.4(2.2)(21)(0)$$
$$= 913.2 \text{ kN/m}^2$$

∴ Net ultimate bearing capacity,

$$q_{nu} = q_u - \gamma D_f = 913.2 - 21(4.4) = 820.8 \text{ kN/m}^2$$

∴ Net safe bearing capacity,

$$q_{ns} = \frac{q_{nu}}{\text{FOS}} = \frac{820.8}{3} = 273.6 \text{ kN/m}^2$$

∴ Safe bearing capacity, $q_s = q_{ns} + \gamma D_f = 273.6 + 21(4.4) = 366$ kN/m²

∴ Footing can carry a maximum load

$$= q_{ns} A = 273.6 \times (2.2 \times 2.2) = 1324.224 \text{ kN}$$

2.7 Explain the factors which affect the bearing capacity of soils.

[SSC JE - 2009 : 10 Marks]

Solution:

Factors affecting the bearing capacity of soil:

1. Soil type i.e., cohesive or cohesion less.
2. Size of the footing.
3. Shape of the footing i.e., rectangular, square, circular, wall footing etc.
4. Unit weight of soil both above the footing level and below the footing level.
5. Location of water table in the soil.
6. Depth of foundation i.e., shallow foundation or deep foundation.
7. Surcharge load.
8. Ground inclination.
9. Loading eccentricity.
10. Amount of settlement.

2.8 In a plate bearing test on pure clayey soil, failure occurred at a load of 12.2 tonnes. The size of the plate was 45 cm x 45 cm and the test was done at the depth of 1.0 m below ground level. Find out the ultimate bearing capacity for a 1.5 m wide continuous wall footing with its base at a depth of 2 m below the ground level. The unit weight of clay may be taken as 1.9 gm/cc and $N_c = 5.7$ and $N_q = 1$ and $N_\gamma = 0$.

[SSC JE - 2011 : 20 Marks]

Solution:

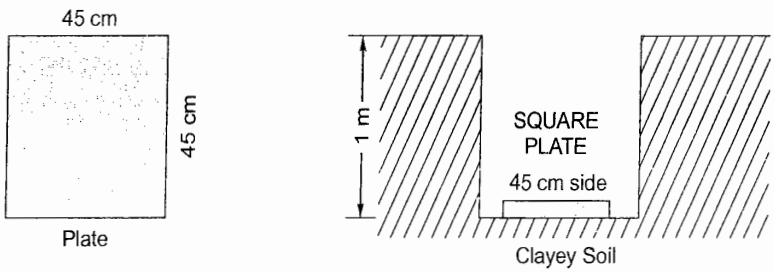


Failure load for plate test = 12.2 tons = 122 kN

Unit weight of clay soil, $\gamma = 1.9$ g/cc = 19 kN/m$^3$

$\because$ Plate is a sort of square footing and ultimate bearing capacity of square footing is given by

$$q_u = 1.3\,cN_c + qN_q + 0.4\,B\gamma N_\gamma \qquad \text{where } B = 45 \text{ cm} = 0.45 \text{ m}$$

Given, $N_c = 5.7,\ N_q = 1,\ N_\gamma = 0$

$$q_u = \frac{122 \times 1000}{0.45 \times 0.45} \text{ N/m}^2 = 602.5 \text{ kN/m}^2$$

Depth of plate, $D_f = 1$ m

$\therefore$ $q_u = 1.3\,cN_c + qN_q + 0.4\,B\gamma N_\gamma$

$\Rightarrow$ $602.5 = 1.3c\,(5.7) + (1 \times 19)\,(1) + 0.4\,(0.45)\,(19)\,(0)$

$\Rightarrow$ $c = 78.7$ kN/m$^2$

Now for wall footing 1.5 m wide, $B = 1.5$ m

Depth of wall footing, $D_f = 2$ m

∴ Ultimate bearing capacity of wall footing is,

$$q_u = cN_c + qN_q + 0.5\,B\gamma N_\gamma$$
$$= 78.7\,(5.7) + (19 \times 2)\,(1) + 0.5\,(2)\,(19)\,(0)$$
$$= 486.59\ \text{kN/m}^2 \simeq 48.659\ \text{ton/m}^2$$

**2.9 A sand deposit is 10 m thick and overlies a bed of soft clay. The ground water table is 3 m below the surface. If the sand above the ground water table has a degree of saturation of 45%, plot the diagram showing the variation of the total stress, pore water pressure and the effective stress. The void ratio of the sand is 0.70. Take $G$ = 2.65.**

**[SSC JE - 2012 : 20 Marks]**

**Solution:**

Given sand above water table is 45% saturated i.e., $S = 0.45$.

∴ Bulk unit weight of sand above water table

$$\gamma = \frac{(G+Se)\gamma_w}{1+e} = \frac{(2.65+0.45\times0.7)9.81}{1+0.7} = 17.11\ \text{kN/m}^3$$

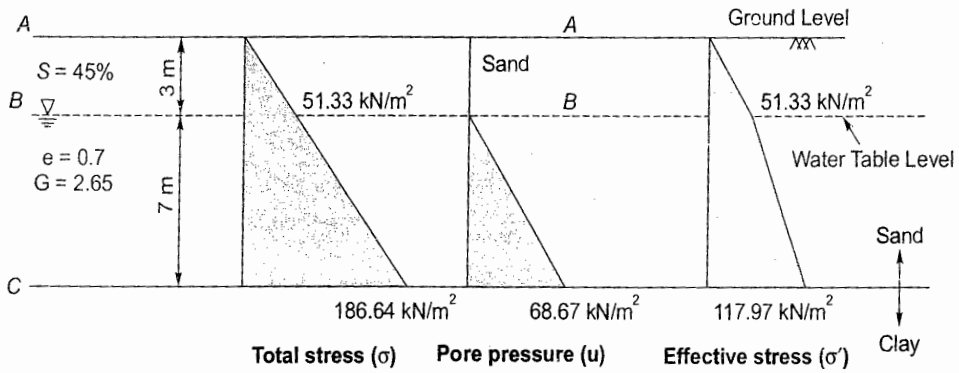


Sand below water table is saturated, so degree of saturation = 100% i.e., $S = 1$

∴ $$\gamma_{sat} = \frac{(G+Se)\gamma_w}{1+e} = \frac{(2.65+0.7)9.81}{1+0.7} = 19.33\ \text{kN/m}^3 \qquad \text{where } S = 1$$

Surface A-A

Total stress, $\sigma = 0$

Pore pressure, $u = 0$

∴ Effective stress, $\sigma' = \sigma - u = 0$

Surface B-B

Total stress, $\sigma = 17.11 \times 3 = 51.33\ \text{kN/m}^2$

pore pressure, $u = 0$

Effective stress, $\sigma' = \sigma - u = 51.33 - 0 = 51.33\ \text{kN/m}^2$

Surface C-C

Total stress, $\sigma = \gamma(3) + \gamma_{sat}(7) = 17.11 \times 3 + 19.33 \times 7 = 186.64\ \text{kN/m}^2$

Pore pressure, $u = 9.81 \times 7 = 68.67\ \text{kN/m}^2$

Effective stress, $\sigma' = \sigma - u$

$= 186.64 - 68.67 = 117.97\ \text{kN/m}^2$

2.10 Calculate the ultimate bearing capacity per unit area of:

(i) A strip footing 1 m wide

(ii) A square footing 3 m × 3 m

(iii) A circular footing of diameter 3 m

Given:

Unit weight of the soil 1.8 t/m$^3$, cohesion - 2 t/m$^2$ and $\phi$ = 20 degree. $N_c$ = 17.5, $N_q$ = 7.5 and $N_\gamma$ = 5.

[SSC JE - 2013 : 15 Marks]

**Solution:**

Unit weight of soil, $\gamma = 1.8 \text{ t/m}^3 = 18 \text{ kN/m}^3$

Cohesion, $c = 2 \text{ t/m}^2 = 20 \text{ kN/m}^2$

Angle of internal friction, $\phi = 20°$

$N_c = 17.5$

$N_q = 7.5$

$N_\gamma = 5$

(i) Strip footing 1 m wide

$$B = 1 \text{ m}$$

Ultimate bearing capacity, $q_u = cN_c + qN_q + 0.5\, B\gamma N_\gamma$

∵Depth of footing is not given and thus assuming the footing to be resting on ground surface,

$$D_f = 0$$

$$\therefore \quad q = \gamma D_f = 0$$

$$\therefore \quad q_u = cN_c + 0.5\, B\gamma N_\gamma$$

$$= 20\,(17.5) + 0.5\,(1)\,(18)\,(5)$$

$$= 395 \text{ kN/m}^2 = 39.5 \text{ t/m}^2$$

(ii) Square footing of size 3 m × 3 m

$$B = 3 \text{ m}$$

Ultimate bearing capacity for square footing is given by,

$$q_u = 1.2\, cN_c + qN_q + 0.4\, B\gamma N_\gamma$$

Here depth of footing, $D_f = 0$ (Assuming the footing to be resting on ground surface)

$$\therefore \quad q = \gamma D_f = 0$$

$$\therefore \quad q_u = 1.2\, cN_c + 0.4\, B\gamma N_\gamma$$

$$= 1.2\,(17.5)\,(20) + 0.4\,(3)\,(18)\,(5)$$

$$= 528 \text{ kN/m}^2 = 52.8 \text{ t/m}^2$$

(iii) Circular footing of 3 m diameter

$$B = 3 \text{ m}$$

Ultimate bearing capacity of circular footing is given by

$$q_u = 1.2\, cN_c + qN_q + 0.3\, B\gamma N_\gamma$$

$$= 1.2\,(20)\,(17.5) + 0 + 0.3\,(3)\,(18)\,(5) \quad (\text{Here } D_f = 0 \text{ So } q = \gamma D_f = 0)$$

$$= 501 \text{ kN/m}^2 = 50.1 \text{ t/m}^2$$

■■■■

# Unit V Hydraulics

## 1. Fluid Properties, Hydrostatic Forces, Buoyancy and Floatation

1.1 A 1.5 m diameter sphere is immersed in water and tied to a rope. If tension in the rope is 5.3 kN, calculate the weight of the sphere in air.

[SSC JE - 2005 : 15 Marks]

Solution:

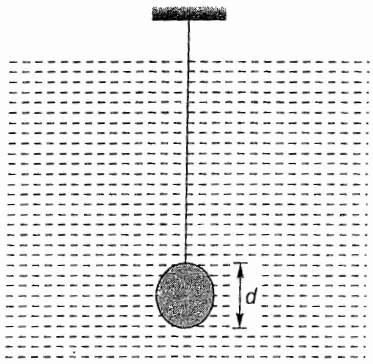


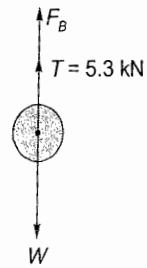


FBD of sphere in water

$\because$ The sphere is in equilibrium

$$W - F_B = T$$

$$\Rightarrow \quad W = T + F_B$$

$$= 5.3 \times 1000 + \gamma_{fluid} V_{immersed}\, g$$

$$= 5300 + 1000 \times \frac{\pi}{6}(1.5)^3 \times 9.81$$

$$= 5300 + 17335.7 = 22635.7 \text{ N} = 22.6357 \text{ kN}$$

$\therefore$ Weight of sphere in air = 22.6357 kN $\simeq$ 22.64 kN

1.2 The space between two parallel horizontal plates is kept 5 mm apart. This is filled with crude oil of dynamic viscosity 2.5 kg-s/m$^2$. If the lower plate is stationary and the upper plate is pulled with velocity of 1.75 m/s, determine the shear stress on the lower plate.

[SSC JE - 2007 : 15 Marks]

Solution:

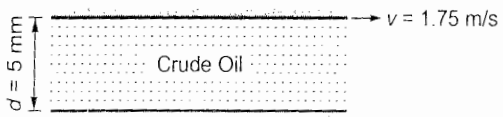


Dynamic viscosity of crude oil, $\mu$ = 2.5 kg-s/m$^2$ = 2.5 × 9.81 Ns/m$^2$ = 24.525 Ns/m$^2$

Shear stress on lower plate, $\tau = \mu \dfrac{dv}{dy} = 24.525\left(\dfrac{v-0}{d}\right) = 24.525\left(\dfrac{1.75}{5\times10^{-3}}\right) = 8.58\times10^3$ N/m$^2$

1.3 The space between two square flat parallel plates is filled with oil. Each side of the plate is 60 cm. The thickness of the oil film is 12.5 mm. The upper plate, which moves at 2.5 m per sec requires a force of 98.1 N to maintain the speed, determine:

(i) the dynamic viscosity of the oil, in poise, and

(ii) the kinematic viscosity of the oil, in stokes, if the specific gravity of the oil is 0.95.

[SSC JE - 2008 : 15 Marks]

Solution:

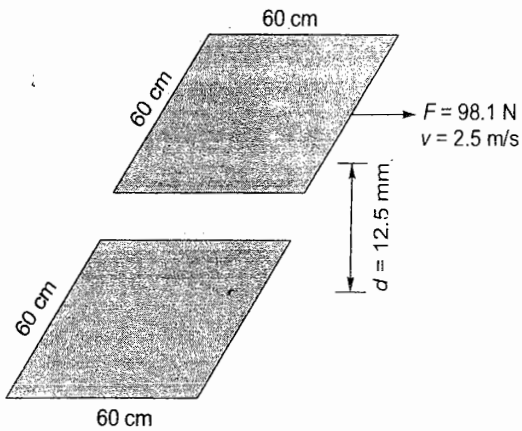


Area of plate, $A = 0.6 \times 0.6\ m^2 = 0.36\ m^2$

Force on plate, $F = A\mu \dfrac{du}{dy}$

$\Rightarrow \quad 98.1 = (0.6 \times 0.6)\mu\left(\dfrac{v-0}{d}\right)$

$\Rightarrow \quad 98.1 = 0.36\mu\left(\dfrac{2.5}{12.5 \times 10^{-3}}\right)$

$\Rightarrow \quad \mu = 1.3625\ Ns/m^2 = 13.625$ poise

Specific gravity of oil $= 0.95$

$\therefore$ Density of oil, $\rho = 0.95 \times 1000 = 950\ kg/m^3$

$\therefore$ Kinematic viscosity of oil, $\nu = \dfrac{\mu}{\rho} = \dfrac{1.3625}{950} = 1.4342 \times 10^{-3}\ m^2/s$

$= 14.342 \times 10^{-4}\ m^2/s$

$= 14.342\ cm^2/s = 14.342$ stokes

1.4 The space between two parallel plates 4 mm apart is filled with an oil of specific gravity 0.85. The upper plate of area 600 $cm^2$ is dragged with constant velocity of 0.75 m/s by applying a force of 0.2 kgf to it. Assume straight line velocity distribution and calculate velocity gradient, dynamic viscosity of oil in poise and kinematic viscosity of oil in stokes.

[SSC JE - 2009 : 15 Marks]

Solution:

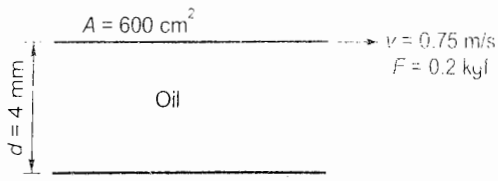

Force on plate, $F = 0.2 \text{ kgf} = 0.2 \times 9.81 \text{ N} = 1.962 \text{ N}$

But $F = \tau A$

$$\Rightarrow \quad \tau = \frac{F}{A} = \frac{1.962\text{N}}{600 \text{ cm}^2} = \frac{1.962}{600 \times 10^{-4}} \text{ N/m}^2 = 32.7 \text{ N/m}^2$$

Now, $$\tau = \mu \frac{du}{dy}$$

$$\Rightarrow \quad 32.7 = \mu\left(\frac{v-0}{d}\right)$$

$$\Rightarrow \quad 32.7 = \mu\left(\frac{0.75-0}{4 \times 10^{-3}}\right).$$

$$\Rightarrow \quad \mu = 0.1744 \text{ Ns/m}^2 = 1.744 \text{ poise} = \text{Dynamic viscosity of oil}$$

$$\text{Velocity gradient} = \frac{dv}{dy} = \frac{v-0}{d} = \frac{0.75-0}{4 \times 10^{-3}} = 187.5 \text{ m/s/m}$$

Kinematic viscosity of oil, $$\nu = \frac{\mu}{\rho} = \frac{0.1744}{0.85 \times 1000} = 2.05 \times 10^{-4} \text{ m}^2/\text{s}$$

$$= 2.05 \text{ cm}^2/\text{s} = 2.05 \text{ stokes.}$$

1.5 **An oil of viscosity 1.0 poise and relative density 1.05 is flowing through a circular pipe of diameter 5 cm and of length 200 m. The rate of flow is 3.52 $l$/sec. Find the shear stress at the pipe wall.**

**[SSC JE - 2010 : 12 Marks]**

**Solution:**

Coefficient of dynamic viscosity,

$$\mu = 1 \text{ poise} = 0.1 \text{ Ns/m}^2$$

Pipe diameter, $D = 5 \text{ cm} = 0.05 \text{ m}$

Length of pipe, $L = 200 \text{ m}$

Discharge, $Q = 3.52 \text{ lit./s} = 3.52 \times 10^{-3} \text{ m}^3/\text{s}$

Mean velocity, $$v_{avg} = \frac{Q}{A} = \frac{3.52 \times 10^{-3}}{\frac{\pi}{4}(0.05)^2} = 1.793 \text{ m/s}$$

Assuming laminar flow, the mean velocity of flow is given by,

$$v_{avg} = \frac{1}{32\mu}\left(-\frac{\partial p}{\partial x}\right)D^2$$

$$\Rightarrow \quad 1.793 = \frac{1}{32 \times 0.1}\left(-\frac{\partial p}{\partial x}\right)(0.05)^2$$

$$\Rightarrow \quad \left(-\frac{\partial p}{\partial x}\right) = 2295.04 \text{ N/m}^2/\text{m}$$

Now, $$v = \frac{1}{4\mu}\left(-\frac{\partial p}{\partial x}\right)(R^2 - r^2)$$

$$\therefore \quad \frac{\partial v}{\partial r} = \frac{1}{4\mu}\left(-\frac{\partial p}{\partial x}\right)(-2r) = -\frac{r}{2\mu}\left(-\frac{\partial p}{\partial x}\right) \quad \text{...(i)}$$

Shear stress at pipe wall, $\tau_0 = \mu\frac{\partial v}{\partial y}$ where $y = R - r \Rightarrow \partial y = -\partial r$

$$= -\mu\frac{\partial v}{\partial r}$$

Substituting $\frac{\partial v}{\partial r}$ from (i), we have

$$\tau_0 = -\mu\left[\frac{-r}{2\mu}\left(-\frac{\partial p}{\partial x}\right)\right] = \frac{r}{2}\left(-\frac{\partial p}{\partial x}\right) = \frac{0.025}{2}(2295.04) = 28.688 \text{ N/m}^2$$

∴ Shear stress at pipe wall = 28.688 N/m$^2$.

**1.6 What do you mean by "Viscosity"? Velocity distribution of a fluid of dynamic viscosity 8.63 poise is $u = 2/3y - y^2$ in which $u$ is the velocity in m/sec at a distance $y$ meter above the plate. Determine the shear stress at $y = 0$ and $y = 0.15$ m.**

**[SSC JE - 2012 : 20 Marks]**

**Solution:**

**Viscosity:** It is the property of fluid due to which fluid offers resistance to the movement of one layer of fluid over another layer of fluid. Viscosity arises because of cohesion and exchange of molecular momentum between the fluid layers.

Given,

Coefficient of dynamic viscosity, $\mu$ = 8.63 poise = 0.863 Ns/m$^2$

Velocity distribution, $u = \frac{2}{3}y - y^2$

∴ Velocity gradient, $\frac{\partial u}{\partial y} = \frac{2}{3} - 2y$

∴ Shear stress, $\tau = \mu\frac{\partial u}{\partial y} = \mu\left(\frac{2}{3} - 2y\right)$

∴ Shear stress at $y = 0$, $\tau_0 = \frac{2}{3}\mu = \frac{2}{3}(0.863) = 0.5753$ N/m$^2$

Shear stress at $y = 0.15$ m, $\tau = \mu\left(\frac{2}{3} - 2(0.15)\right) = 0.3164$ N/m$^2$

## 2. Fluid Kinematics, Dynamics & Flow Measurements, Flow Through Pipes and Dimensional Analysis

2.1 An open tank 5 m long, 2 m deep and 3 m wide contains oil of relative density 0.9 to a depth of 0.9 m. If the tank is accelerated along its length on a horizontal track at a constant value of 3 m/s$^2$, determine the new position of oil surface.

[SSC JE - 2007 : 15 Marks]

Solution:

Let $\theta$ = angle made by fluid surface with the horizontal when accelerated.

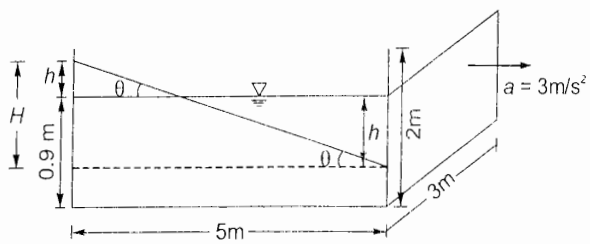

$$\tan\theta = \frac{a}{g} = \frac{3}{9.81}$$

$\therefore$ $$H = 5\tan\theta = \frac{5\times 3}{9.81} = 1.53 \text{ m}$$

$\therefore$ $$h = \frac{H}{2}\left(\text{or } \frac{5}{2}\tan\theta\right) = 0.765 \text{ m}$$

$\therefore$ Final height = $0.9 + h = 0.9 + 0.765 = 1.665 \text{ m} < 2 \text{ m}$

$\therefore$ Oil will not spill.

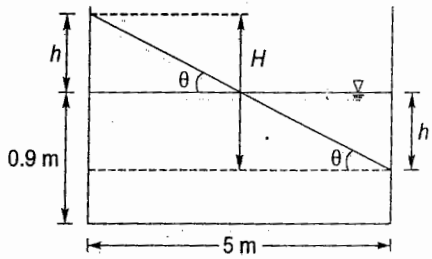


$\therefore$ Pressure at rear end $= \rho g\,(0.9 + h)$

$= (0.9 \times 1000)\,9.81\,(0.9 + 0.765)$

$= 14700.285 \text{ N/m}^2 = 14.7 \text{ kN/m}^2$

Pressure at front end $= \rho g\,(0.9 - h)$

$= 900 \times 9.81\,(0.9 - 0.765)$

$= 1191.915 \text{ N/m}^2 = 1.192 \text{ kN/m}^2$

**2.2 Write a note on flow measurement methods employed for pipe flow and open channels. (with specific reference to drains).**

[SSC JE - 2007 : 10 Marks]

Solution:

**Pipe flow measurement methods:** There are many methods employed to measure the flow in pipes the results of which range from very rough estimate to very precise ones. Some of them are as follows:

(i) **Venturimeter:** In this, pressure head is converted to velocity head and the differential head is measured at the upstream and the throat sections. Advantage with this flow measuring device is that head loss is small, there are no moving parts and thus there is no wear and tear due to moving parts. Moreover there are very little chances of clogging of venturimeter.

(ii) **Pitot tube:** In this, the velocity head is converted into pressure head which is measured. These get clogged very frequently if water is turbid. In case, velocity is large then there will be large velocity head which will be converted to a large pressure head in Pitot tube and thus the size of Pitot tube becomes very large unless a manometer with a dense liquid like mercury is used.

(iii) **Flow nozzle:** It is similar to venturimeter but head loss is large here due to the absence of downstream diverging section. The flow measurement equation is same as that of venturimeter.

(iv) **Orifice meter:** This is a thin plate with a small orifice in it which creates a pressure differential. Measurement of this pressure differential is used to compute the discharge. The orifice opening is beveled for better accuracy.

**Channel flow measurement methods:** Some of the methods of channel flow measurements are as follows:

(i) **Velocity-area method:** This method involves measurement of the cross-section of the river at a particular site (called as *gauging site*) and measuring the velocity of flow through the cross – sectional area. The gauging site so selected should be well defined and permanent i.e. its cross – section should not get changed from time to time.

(ii) **Dilution method:** This method also called as *chemical method* is based on the continuity principle. A tracer of known concentration is allowed to mix completely in the river and concentration of the resultant mix is determined from the concentration profile plot. The drawback of this method is that it cannot be used in case of unsteady flows.

(iii) **Electromagnetic method:** This method is based on Faraday's principle that an emf is induced in the conductor if magnetic flux linked with it changes with time. Here large coils are buried under the ground carrying current which produce a vertical magnetic field. Flow of water produces an emf (voltage) across the sides of the channel which is measured. This signal output E is related to discharge $Q$ as:

$$Q = K_1\left(\frac{Ed}{I}+K_2\right)^n$$

where $K_1$, $K_2$ and n are constants and E is induced emf, I is current in the coil.

(iv) **Ultrasonic method:** It is similar to area – velocity method with the only difference that here velocity is measured using ultrasonic signals.

**2.3 A horizontal bend in pipeline conveying water gradually reduces from 60 cm to 30 cm diameter and deflects the flow through an angle of 60°. At the larger end the gauge pressure is 1.75 kg/cm². Determine the magnitude and direction of the force exerted on the bend.**

**(i) when there is no flow,**

**(ii) when the flow is 876 lit./sec**

**[SSC JE - 2009 : 15 Marks]**

Solution:

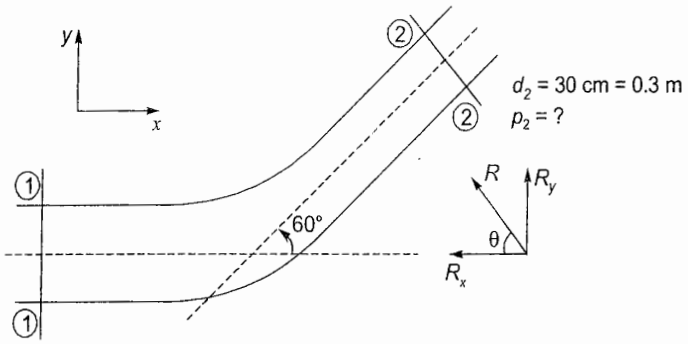


$d_1$ = 60 cm = 0.6 m

$p_1$ = 1.75 kg/cm² = 171.675 kN/m²

(i) When there is no flow.

$$p_1 = p_2 \quad (\because \text{ There is no flow and hence no pressure difference})$$

Let $R_x$ and $R_y$ are forces exerted on bend in the $x$ and $y$ directions i.e., in the horizontal and vertical directions respectively.

For equilibrium, $\Sigma F_x = 0$ and $\Sigma F_y = 0$

$$\Sigma F_x = 0$$

$$\Rightarrow \quad p_1A_1 - p_2A_2\cos 60° - R_x = 0$$

$$\Rightarrow \quad R_x = 171.675\times\frac{\pi}{4}(0.6)^2 - 171.675\times\frac{\pi}{4}(0.3)^2\cos 60°$$

$$\Rightarrow \quad R_x = 42.47 \text{ kN } (\leftarrow)$$

$$\Sigma F_y = 0$$

$$\Rightarrow \quad R_y - p_2A_2\sin 60° = 0$$

$$\Rightarrow \quad R_y = 171.675\times\frac{\pi}{4}(0.3)^2\sin 60° = 10.51 \text{ kN } (\uparrow)$$

Resultant force on bend ($R$) = $\sqrt{R_x^2 + R_y^2} = \sqrt{(42.47)^2 + (10.51)^2} = 43.75$ kN

$$\tan\theta = \frac{R_y}{R_x}$$

$$\Rightarrow \quad \theta = \tan^{-1}\left(\frac{10.51}{42.47}\right) = 13.9°$$

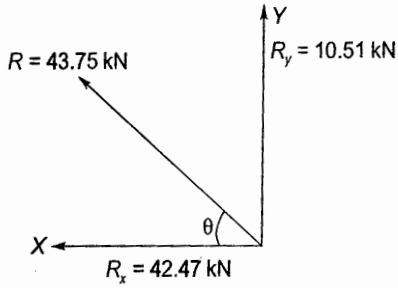


(ii) When the flow is 876 $l/s$.

$$Q = 876\ l/s = 0.876\ m^3/s$$

$$Q = A_1 v_1 = A_2 v_2 \quad \text{(Same discharge at sectin 1-1 and 2-2)}$$

$$\Rightarrow \quad 0.876 = \frac{\pi}{4}(0.6)^2 v_1 = \frac{\pi}{4}(0.3)^2 v_2$$

$$\therefore \quad v_1 = 3.1\ m/s,\ v_2 = 12.4\ m/s$$

Applying Bernoulli's equation at section (1)-(1) and (2)-(2) assuming that there are no major or minor losses. (i.e., neglecting losses)

$$\frac{p_1}{\rho g} + \frac{v_1^2}{2g} = \frac{p_2}{\rho g} + \frac{v_2^2}{2g} \quad (\because \text{ Pipe is horizontal, } \therefore\ Z_1 = Z_2)$$

$$\Rightarrow \quad \frac{171.675 \times 10^3}{9.81 \times 1000} + \frac{(3.1)^2}{2 \times 9.81} = \frac{p_2}{\rho g} + \frac{(12.4)^2}{2 \times 9.81}$$

$$\Rightarrow \quad \frac{p_2}{\rho g} = 10.153\ m$$

$$\Rightarrow \quad p_2 = 10.153 \times 1000 \times 9.81 = 99600.93\ N/m^2 = 99.6\ kN/m^2$$

when, $\Sigma F_x = 0$

$$\Rightarrow \quad p_1 A_1 - p_2 A_2 \cos 60° - R_x = \rho Q (v_2 \cos 60° - v_1)$$

$$\Rightarrow \left[171.675 \times \frac{\pi}{4}(0.6)^2 - 99.6 \times \frac{\pi}{4}(0.3)^2 \cos 60° - R_x\right] 10^3$$

$$= 10^3 \times 0.876\,(12.4 \cos 60° - 3.1)$$

$$\Rightarrow \quad R_x = 42.304\ kN$$

when, $\Sigma F_y = 0$

$$\Rightarrow \quad R_y - p_2 A_2 \sin 60° = \rho Q (v_2 \sin 60°)$$

$$\Rightarrow \left[R_y - 99.6 \times \frac{\pi}{4}(0.3)^2 \sin 60°\right] 10^3 = 10^3 \times 0.876\,(12.4 \sin 60°)$$

$$\Rightarrow \quad R_y = 15.504\ kN\ (\uparrow)$$

$$\therefore \quad \text{Resultant force } R = \sqrt{R_x^2 + R_y^2}$$

$$= \sqrt{(42.304)^2 + (15.504)^2}$$

$$= 45.06\ kN$$

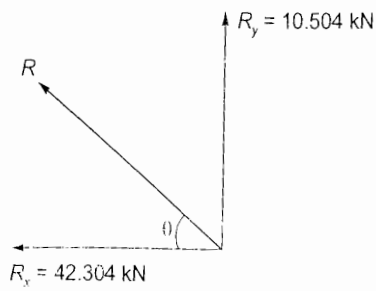


$$\therefore \quad \theta = \tan^{-1}\left(\frac{R_y}{R_x}\right) = 20.13°$$

2.4 Lubricating oil of specific gravity 0.85 and dynamic viscosity 0.01 kgf-s/m$^2$ is pumped through a 3 cm diameter pipe. If pressure drop per metre length of the pipe is 0.15 kgf/cm$^2$, determine the mass flow rate in kg/min, the shear stress at the pipe wall, the Reynold's number of flow and the power required per 40 m length of pipe to maintain the flow.

[SSC JE - 2010 : 18 Marks]

Solution:

Specific gravity of oil = 0.85

∴ Density of oil = 0.85 x 1000 = 850 kg/m$^3$

Coefficient of dynamic viscosity, $\mu$ = 0.01 kgf-s/m$^2$ = 0.01 x 9.81 Ns/m$^2$

= 0.0981 Ns/m$^2$ ≃ 0.1 Ns/m$^2$

Pipe diameter, $d$ = 3 cm = 0.03 m

Pressure drop per metre pipe length,

$$\frac{\Delta p}{L} = 0.15 \text{ kgf/cm}^2 = \frac{0.15 \times 9.81 \text{ N}}{10^{-4} \text{ m}^2}$$

$$= 1.4715 \times 10^4 \text{ N/m}^2 \text{ per metre pipe length}$$

Length of pipe, $L$ = 40 m

∴ Total pressure drop, $\Delta p = 1.4715 \times 10^4 \times 40 = 58.86 \times 10^4$ N/m$^2$

Let flow is laminar.

∴ Average flow velocity, $$v_{avg} = \frac{1}{4\mu}\left(-\frac{\partial p}{\partial x}\right)\frac{R^2}{2}$$

$$= \frac{1}{4 \times 0.1}\left(1.4715 \times 10^4\right)\frac{(0.015)^2}{2} = 4.14 \text{ m/s}$$

Reynold's number $$R_e = \frac{\rho v_{avg} d}{\mu} = \frac{850 \times 4.14 \times 0.03}{0.1} = 1055.7 < 2000$$

∴ Flow is laminar and assumption is correct.

∴ Discharge, $Q = A.v_{avg}$

$$= \frac{\pi}{4} d^2 v_{avg} = \frac{\pi}{4}(0.03)^2(4.14)$$

$$= 2.926 \times 10^{-3} \text{ m}^3/\text{s} = 2.926 \text{ lit/s}$$

∴ Mass flow rate = $\rho Q = 850 \times 2.926 \times 10^{-3}$ kg/s

= 149.226 kg/min

Head loss, $$h_f = \frac{\Delta p}{\rho g} = \frac{58.86 \times 10^4}{850 \times 9.81} = 70.588 \text{ m of oil}$$

∴ Power required for flow, $P = \rho Q g h_f$

$= 850 \times 2.926 \times 10^{-3} \times 9.81 \times 70.588$

= 1722.24 W = 1.722 kW

2.5 Calculate the discharge through a pipe of dia. 200 mm when the difference of pressure head between two ends of a pipe 500 m apart is 4 m of water. Take the value of $f$ = 0.009 in the formula

$$h_f = \frac{4.f.L.V^2}{d.2g}$$

[SSC JE - 2013 : 15 Marks]

Solution:

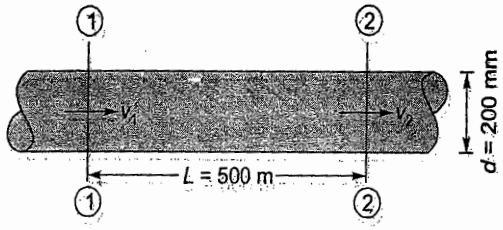


From continuity principle, $Q_1 = Q_2$

$\Rightarrow$ $A_1V_1 = A_2V_2$

$\Rightarrow$ $\frac{\pi}{4}d^2v_1 = \frac{\pi}{4}d^2v_2$

$\Rightarrow$ $v_1 = v_2$ (Since $d_1 = d_2 = d = 200$ mm)

Applying Bernoulli's equation at sections (1)-(1) and (2)-(2)

$$\frac{p_1}{\rho g} + \frac{v_1^2}{2g} + z_1 = \frac{p_2}{\rho g} + \frac{v_2^2}{2g} + z_2 + h_f$$

$\Rightarrow$ $\left(\frac{p_1 - p_2}{\rho g}\right) = h_f$ ($\because v_1 = v_2$ and $z_1 = z_2$)

But $h_f = \frac{4fLv^2}{2dg}$

$\Rightarrow$ $\frac{p_1 - p_2}{\rho g} = \frac{4fLv^2}{2dg}$

$\Rightarrow$ $4 = \frac{4(0.009)500v^2}{2(0.2)9.81}$

$\Rightarrow$ $v = 0.934$ m/s

$\therefore$ Discharge, $Q = AV = \frac{\pi}{4}(0.2)^2 \times 0.434$

$= 0.02934$ m$^3$/sec $= 29.34$ lit./sec

2.6 Find the discharge through a rectangular orifice 2.0 m wide and 1.5 m deep fitted to a water tank. The water level in the tank is 3 0 m above the top edge of the orifice. Take $C_d = 0.62$.

[SSC JE - 2014 : 30 Marks]

Solution:

Width of orifice = $b$ = 2 m (given)

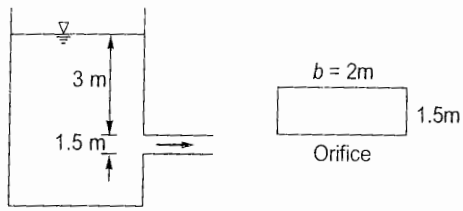


Coefficient of discharge, $C_d = 0.62$

Discharge through a rectangular orifice is given by,

$$Q = \frac{2}{3}C_d b\sqrt{2g}\left[H_2^{3/2} - H_1^{3/2}\right]$$ where $H_2 = 3 + 1.5 = 4.5$ m, $H_1 = 3$ m

$$= \frac{2}{3}(0.62)(2)\sqrt{2 \times 9.81}\left[4.5^{3/2} - 3^{3/2}\right] = 15.93 \text{ m}^3/\text{s}$$

## 3. Open Channel Flow & Hydraulic Machines

3.1 A pelton wheel is to be designed for the following specifications
Shaft power = 11772 kW; Head = 380 m;
Speed = 750 rpm; Overall efficiency = 86%
Diameter is not to exceed one-sixth of the wheel diameter
Determine:
(i) the wheel diameter
(ii) the number of jets required and
(iii) diameter of the jet
Take coefficient of velocity = 0.985 and speed ratio = 0.46

[SSC JE - 2008 : 15 Marks]

Solution:

Shaft power, $P = 11772\,\text{kW}$

Head, $H = 380\,\text{m}$

Speed, $N = 750\,\text{rpm}$

Overall efficiency, $\eta = 86\%$ or $0.86$

$$= \frac{\text{Shaft power}}{\text{Power supplied at turbine entrance}}$$

$$\Rightarrow \quad 0.86 = \frac{11772 \times 10^3}{\rho Q g H}$$

$$\Rightarrow \quad Q = \frac{11772 \times 10^3}{0.86 \times 10^3 \times 9.81 \times 380} = 3.672\,\text{m}^3/\text{s}$$

Also, $v = c_v\sqrt{2gH} = 0.985\sqrt{2 \times 9.81 \times 380} = 85.05\,\text{m/s}$

Given, $\text{speed ratio} = \dfrac{u}{\sqrt{2gH}} = 0.46$

$$\therefore \quad u = 0.46\sqrt{2gH} = 0.46\sqrt{2 \times 9.81 \times 380}$$

$$= 0.46\,(85.35) = 39.721\,\text{m/s}$$

Now, $u = \dfrac{\pi DN}{60} \Rightarrow D = \dfrac{60(39.721)}{\pi(750)} = 1.01\,\text{m} \simeq 1\,\text{m (say)}$

$\therefore$ Diameter of jet, $d = \dfrac{D}{6} = \dfrac{1}{6} = 0.167\,\text{m}$

Discharge through one jet, $q = v \cdot \dfrac{\pi}{4}d^2 = 85.05 \times \dfrac{\pi}{4}(0.167)^2 = 1.863\,\text{m}^3/\text{s}$

$\therefore$ Number of jets required, $n = \dfrac{Q}{q} = \dfrac{3.672}{1.863} = 1.97 \simeq 2\,\text{nos. (say)}$

Thus two jets are required with diameter ($d$) which is given by,

$$Q = n \cdot \frac{\pi}{4}d^2 v$$

$$\Rightarrow \quad 3.672 = 2 \cdot \frac{\pi}{4} d^2 (85.05)$$

$$\Rightarrow \quad d = 0.166 \simeq 0.167 \quad \text{(OK)}$$

which is very close to diameter considered earlier.

3.2 A rectangular channel 2.0 m wide has a discharge of 250 lit/sec which is measured by a right angled V-notch weir. Find the position of the apex of the notch from the bed of the channel if the maximum depth of the water is not to exceed 1.3 m. Take $C_d = 0.62$.

[SSC JE - 2011 : 18 Marks]

Solution:

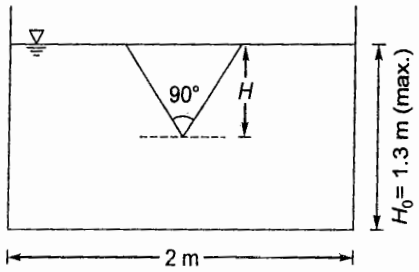


$$C_d = 0.62$$

Discharge, $Q = 250\ l/s = 0.25\ m^3/s$

Discharge from a right angled V-notch is given by,

$$Q = \frac{8}{15} C_d \sqrt{2g}\, H^{5/2} \qquad (\because \tan \theta/2 = \tan (90°/2) = 1)$$

$$\Rightarrow \quad 0.25 = \frac{8}{15}(0.62)\sqrt{2 \times 9.81}\, H^{5/2}$$

$$\Rightarrow \quad H = 0.493 \text{ m}$$

Given maximum depth of water, $H_0 = 1.3$ m

$\therefore$ Flow velocity through channel, $v = \frac{Q}{A} = \frac{0.25}{2 \times 1.3} = 0.0962$ m/s

$\therefore$ Head due to flow velocity i.e., velocity of approach $(h_a) = \frac{v^2}{2g} = \frac{(0.0962)^2}{2 \times 9.81}$

$= 4.717 \times 10^{-4}$ m which is very small

Thus head due to velocity of approach can be neglected.

Thus head over the *V*-notch = $H = 0.493$ m

$\therefore$ Apex of *V*-notch is located at $(H_0 - H) = (1.3 - 0.493)$ m = 0.807 m above the channel bed.

■■■■

# Unit VI Irrigation Engineering

## 1. Water Requirement of Crops, Hydraulic Structures, Hydrology and Miscellaneous

1.1 Write a short note on Consumptive use of water.

[SSC JE - 2011 : 15 Marks]

Solution:

Consumptive use of water:

- It is the amount of water required by a crop in transpiration i.e. growth of plant tissues and the water lost from the surrounding soil and from the leaves as evaporation. It is also referred to as **evapotranspiration.**
- The value of consumptive use of water varies from crop to crop and from soil to soil. Also it may differ for the same crop at different times of a year.
- Consumptive use is useful in assessing the irrigation requirement for a crop.
- The factors which affect the consumptive use of a crop are temperature, humidity, wind velocity, atmospheric pressure etc.
- *Blaney–Criddle* equation is the most commonly used expression for estimating the consumptive water requirement of a crop in an area which is given by:

$$C_u = \frac{kp}{40}[1.8t+32]$$

where $C_u$ = Monthly consumptive use (in cm)

$k$ = Crop factor which is determined experimentally for each crop under the given environmental conditions

$t$ = Mean monthly temperature (in °C)

$p$ = Monthly percentage of annual day light hours for the period under consideration

1.2 Explain the term Base period and Crop period. After how many days will you order irrigation in order to ensure healthy growth of crops if:

(i) Field capacity of soil = 29%

(ii) Permanent wilting point = 11%

(iii) Density of soil = 1300 kg/m$^3$

(iv) Effective depth of root zone = 700 mm

(v) Daily consumptive use of water of the given crop = 12 mm

Consider moisture content must not be less than 25% of the water holding capacity between the field capacity and permanent wilting point.

[SSC JE - 2012 : 20 Marks]

Solution:

Base period: It is the time between first watering of the crop after sowing to the last watering before harvesting.

**Crop period:** It is the time between sowing and harvesting of the crop. Thus crop period is marginally larger than base period.

In usual usage, both crop period and base period imply the same connotation.

**Numerical:** Available moisture = Field capacity – Permanent wilting point

= 29 – 11 = 18%

Given moisture content must not be less than 25% of water holding capacity of soil between the field capacity and permanent wilting point.

∴ Readily available mositure = 75% of available moisture

= 0.75 × 18 = 13.5%

Thus irrigation will be required to raise the soil moisture content from 13.5% to 29%.

∴ Depth of water stored is root zone between these two limits of 13.5% and 29%

$$= \frac{\gamma_d \cdot d}{\gamma_w}[\text{F.C.} - \text{Optimum moisture content}]$$

$$= \frac{1300}{1000} \times 700(0.29 - 0.135)$$

$$= 0.14105 \text{ m} \simeq 0.141 \text{ m} = 141 \text{ mm}$$

Thus 141 mm of water is available for consumptive use. But daily consumptive use of water by crop = 12 mm/day

∴ 141 mm of water will be utilised in $\frac{141}{12}$ = 11.75 days ≈ 11 days

∴ After 11 days, irrigation will be required.

1.3 Write a short note on Night Irrigation.

[SSC JE - 2013 : 15 Marks]

Solution:

**Night Irrigation:** It refers to the practice of irrigation of crops at night so as to lower the loss of water due to evaporation. Since water is a sparse resource and thus it always remains debatable when to irrigate the crop in a day or at night. Many prefer irrigation at the time of early dawn while others prefer afternoon time. Among all, day time irrigation is the most uneconomical due to high evapotranspiration demand of crop.

In night irrigation, it is ensured that irrigation should complete by the morning before sunrise in order to have sufficient soaking of water by the soil. Water lost during night time irrigation is about 25 – 50% less than that during day time irrigation.

1.4 Give brief account of the drawbacks in Kennedy's theory.

[SSC JE - 2013 : 15 Marks]

Solution:

Drawbacks of Kennedy's theory:

- Kennedy assumed that eddy current in channel arises only due to roughness of channel bed.
- This theory is applicable only for those channels which carry certain amount of silt.
- This theory is applicable only for regime channels.
- The channel width ($B$) and depth of flow ($y$) has no significance in this theory.
- It is a trial and error based design approach.
- There is no logical basis for assigning the values of '$m$' (Critical Velocity Ratio i.e. CVR) to different types of soil and the phenomenon of silt transportation is not properly accounted for.

- It assumes that silt is carried in the flowing water by the vertical eddies generated from the channel bed only but actually eddies get generated from the entire wetted perimeter of the channel.
- This theory gives no expression for determining the channel bed slope.

1.5 Enumerate the assumptions made in Lacey's theory of canal design.

[SSC JE - 2014 : 15 Marks]

Solution:

Assumptions in Lacey's theory of canal design:

(i) Lacey assumed that silt is transported due to eddies generated from the entire wetted perimeter of canal section and that the canal section achieves a semi-elliptical (or cup shaped) profile called as regime canal.

(ii) Grain size of the silt material is considered important in this theory which is related to silt factor as $f = 1.75(d_{mm})^{0.5}$.

(iii) Kutter's formula is used in Lacey's theory for computation of flow velocity.

(iv) Lacey assumed that canal slope bears a definite relation with discharge which Kennedy didn't considered.

(v) Lacey assumed a constant discharge through the canal.

(vi) It is assumed that canal flows uniformly in an incoherent alluvium which bears the same characteristics as that is being carried by the canal.

■■■■

# Unit VII Transportation Engineering

**1.1 Give advantages and disadvantages of concrete sleeper.**

**[SSC JE - 2011 : 15 Marks]**

**Solution:**

**Advantages:**

1. Concrete sleepers has long life (of about 50 years).
2. These are very good for the purpose of track-circuiting (in automatic signaling).
3. These are not prone to fire like timber sleepers.
4. These are easy to manufacture.
5. These are resistant to insect attack.
6. Pre-stressed concrete sleepers enhance the load carrying capacity of tracks.

**Disadvantages:**

1. Concrete sleepers are brittle in nature and get cracked easily.
2. Once broken, concrete sleepers cannot be repaired.
3. These do not have any scrap value like in case of steel sleepers or wooden sleepers.
4. Due to high density of concrete, these sleepers are very heavy and thus their transportation and handling cost many a times make them uneconomical.

**1.2 List down the modes of water penetration into road structure with a neat sketch.**

**[SSC JE - 2011 : 12 Marks]**

**Solution:**

**Modes of water penetration into road structure:**

(i) Capillary rise of sub-soil water from beneath the pavement.

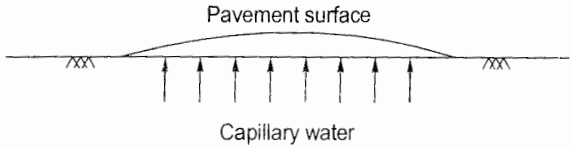


(ii) Penetration of surface water from top of the pavement (percolation), mostly through cracks on the pavement surface.

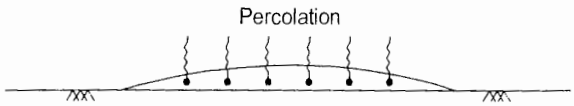


(iii) Penetration of sub-soil water from sides of the pavement.

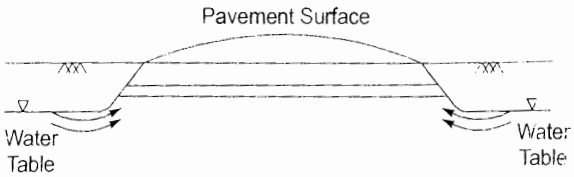

(iv) Interception of water due to flooding of cross drains provided along the pavement.

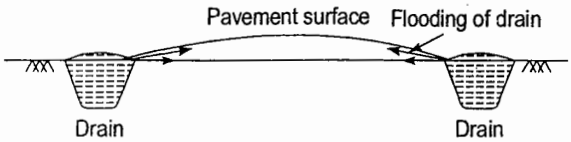


(v) Interception of surface water from sides of the pavement.

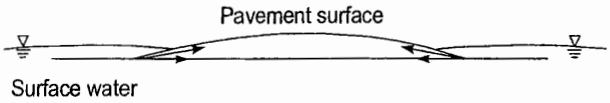


**1.3 What is superelevation? Derive the relation between superelevation and speed of vehicle on horizontal curve. Design the rate of superelevation for a horizontal curve of a radius 500 m and speed 100 km/hr.**

**[SSC JE - 2012 : 5 + 15 = 20 Marks]**

**Solution:**

**Super-elevation:** Super-elevation (or banking) is the raising of the outer edge of road with respect to the inner edge in order to counteract the centripetal force arising due to negotiation of a curve by a vehicle. Without super-elevation, if a vehicle negotiates a curve then it will be thrown out of the curve due to outward acting centripetal force.

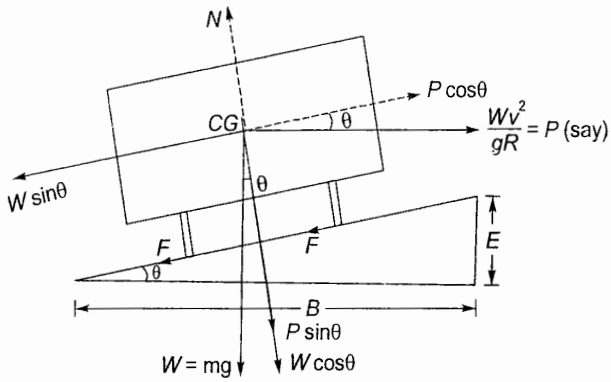


Let $W$ = Weight of vehicle

$V$ = Velocity of vehicle

$B$ = Width of road

$E$ = Super-elevation where $\tan\theta = \dfrac{E}{B} = e$ (say)

$F$ = Frictional force between the vehicle tyres and road = $\mu N$

$P$ = Centrifugal force on horizontal curve

Thus resolving the various forces in two perpendicular directions,

we have, $$F = \mu N = \mu(W\cos\theta + P\sin\theta) \quad \text{...(i)}$$

and $$F + W\sin\theta = P\cos\theta$$

$$\Rightarrow \quad \mu(W\cos\theta + P\sin\theta) + W\sin\theta = P\cos\theta \quad \text{...(ii)}$$

$$\Rightarrow \quad W(\sin\theta + \mu\cos\theta) = P(\cos\theta - \mu\sin\theta)$$

$$\Rightarrow \quad \frac{P}{W} = \frac{\sin\theta + \mu\cos\theta}{\cos\theta - \mu\sin\theta}$$

$$\Rightarrow \quad \frac{P}{W} = \frac{\mu + \tan\theta}{1 - \mu\tan\theta} \quad \text{...(iii)}$$

Now $$P = \frac{Wv^2}{gR}$$

$$\Rightarrow \quad \frac{P}{W} = \frac{v^2}{gR} = \tan\theta$$

Substituting $\frac{P}{W}$ in (iii),

$$\frac{v^2}{gR} = \frac{\mu + \tan\theta}{1 - \mu\tan\theta} = \frac{\mu + e}{1 - \mu e} \simeq \mu + e \quad (\because \mu e << 1)$$

$$\therefore \quad v = \sqrt{gR(\mu + e)}$$

Given radius of horizontal curve, $R = 500$ m

Speed of vehicle, $v = 100$ km/h $= 27.78$ m/s

Super-elevation is designed for 75% of maximum speed

$$= 0.75 \times 100 = 75 \text{ km/hr} = 20.83 \text{ m/s}$$

$$\therefore \quad e = \tan\theta = \frac{v^2}{gR} = \frac{(20.83)^2}{9.81 \times 500} = 0.088 > 0.07$$

Thus fix '$e$' to 0.07

Now, $$\mu + e = \frac{v^2}{gR}$$

$$\Rightarrow \quad \mu = \frac{(20.83)^2}{9.81 \times 500} - 0.07 = 0.018 < 0.15 \quad \text{(OK)}$$

Thus provide a super-elevation of 0.07 or 7%.

1.4 Compare and contrast flexible and rigid pavements.

[SSC JE - 2013 : 15 Marks]

Solution:

*Flexible vs Rigid Pavement*

| S.No. | Flexible Pavement | Rigid Pavement |
|---|---|---|
| 1. | Here load is transferred by soil grain to grain contact. | Here load is transferred by the slab action (i.e. by flexure) of the pavement. |
| 2. | Here any deformation in the sub-grade gets reflected at the top surface since flexible pavement takes the shape of soil sub-grade. | Here any sub-grade deformation is not reflected at the top due to bridging of pavement slab over the depression. |
| 3. | Due to grain to grain transfer to load, this pavement is constructed in layers. | Here only the pavement slab is constructed. |
| 4. | This is analyzed and designed by empirical and semi-empirical approaches. | It is analyzed and designed by elastic theory. |
| 5. | Compressive stress is the predominant stress in this pavement. | Flexural stresses are the predominant stresses in this. |

1.5 Describe the method of laying Water Bound Macadam (WBM) road.

[SSC JE - 2014 : 10 Marks]

**Solution:**

The following steps are followed:

(i) **Preparation of subgrade:** The subgrade must be strong enough so that it does not settle under the loads and thus soil subgrade is compacted usually by rollers (of weight 80 kN) after sprinkling water on to the soil. Any resulting depressions must be filled first before laying the second layer.

(ii) **Construction of sub-base:** Here in this step, crushed stones or over burnt bricks or boulders in thickness of 10 cm-20 cm is laid. The sub-base is also compacted by rollers.

(iii) **Construction of base:** On the prepared surface of sub-base, a layer of base course is laid of specified material. The thickness, grade and cross-section are maintained as per the design and specifications.

(iv) **Preparation of wearing course:** This layer is the top most surface which undergoes large abrasion due to moving vehicles. This course is laid in one or more layers and thickness of this layer is kept as per the design. Generally this wearing course is of asphalt or tar.

After all these steps, shoulders are constructed by spreading earth on either side of the pavement at the specified slope and width. This is achieved by rolling and tamping.

■■■■

# Unit VIII Environmental Engineering

## 1. Water Demand

1.1 Discuss the impact of Urbanization and Industrialization on water resource (in terms of both quantity and quality).

[SSC JE - 2013 : 15 Marks]

Solution:

**Impact of urbanization and industrialization on water resources:**

**Impact in terms of quantity:** Increased urbanization and industrialization puts heavy load on city's existing water resources. Industries like pulp and paper, tanneries, meat processing units etc. demand for too much of water.

- Too much urbanization area affects adversely affects the ground water recharge thereby lowering the ground water level.
- When the city's water resources become insufficient to meet the water demand, alternative sources have to be searched for. Conveying water from such new sources incurs expenditure on infrastructure development like construction of head works, laying of canals, construction of new WTPs etc.
- Increased urbanization and industrialization also leads to increased generation of waste which overloads the existing STPs and also causes water pollution.

**Impact in terms of quality:** With too much industrialization and urbanization, water quality deteriorates.

- The waste generated is often dumped on the ground which contaminates the ground water through leachate.
- When existing STPs get overloaded, it is quite common that a significant amount of waste gets disposed off without any treatment which contaminates the ground and the rivers and oceans.
- Industries often discharge many harmful elements like lead, arsenic etc. which when discharged into the river or gets infiltrated to the ground makes water unfit for use, either temporarily or permanently.
- Discharging of industrial waste into the rivers invariably poses hazard to the aquatic life and disturbs the ecosystem.

## 2. Quality Control of Water Supply and Water Treatment

2.1 Compute the dimensions of a continuous flow rectangular settling tank treating average of $24 \times 10^5$ liters/day. Take detention period for raw water sedimentation to be 6 hours.

[SSC JE - 2005 : 10 Marks]

Solution:

Daily flow rate, $Q = 24 \times 10^5$ lit./day $= 1 \times 10^5$ l/hr

$$= \frac{24 \times 10^5 \times 10^{-3}}{24 \times 3600} m^3/s = \frac{100}{3600} m^3/s = 0.0278 \ m^3/s$$

Detention period, $t_d = 6$ hours

$\therefore$ Volume of tank, $V = Qt_d$

$= (10^5 \text{ lit/hr})(6 \text{ hr}) = 6 \times 10^5 \text{ lit.} = 600 \text{ m}^3$

Assuming settling velocity of particles in the tank as 1 mm/s,

i.e., $v = 1 \text{ mm/s} = 10^{-3} \text{ m/s}$

$\therefore$ Plan area of tank, $A = \dfrac{Q}{v} = \dfrac{0.0278}{10^{-3}} = 27.8 \text{ m}^2$

$\therefore$ Depth of tank, $d = \dfrac{V}{A} = \dfrac{600}{27.8} = 21.58 \text{ m}$

Let Free board = 300 mm

$\therefore$ Overall depth, $D = d + \text{Free board} = 21.58 + 0.3 = 21.88 \text{ m} = 22 \text{ m (say)}$

Let $\dfrac{L}{B} = 3$

$\therefore$ $A = 27.8 \text{ m}^2$

$\Rightarrow$ $LB = 27.8$

$\Rightarrow$ $3B^2 = 27.8$

$\Rightarrow$ $B = 3.044 \text{ m} \simeq 4 \text{ m (say)}$

$\therefore$ $L = 3B = 3 \times 4 = 12 \text{ m}$

$\therefore$ Dimension of tank $= L \times B \times D = 12 \text{ m} \times 3 \text{ m} \times 22 \text{ m}$

**2.2 Design a $15 \times 10^6$ LPD water treatment plant with rapid gravity sand filter. Assume suitable design parameters.**

**[SSC JE - 2008 : 18 Marks]**

**Solution:**

Water required to be filtered daily $= 15 \times 10^6$ *l*/day

Let 2% of filtered water is required for backwashing.

$\therefore$ Requirement of total filtered water $= 1.02 \times 15 \times 10^6 = 15.3 \times 10^6$ *l*/day

Let time elapsed in backwashing = 30 min. = 0.5 hours

$\therefore$ Requirement of filtered water per hour $= \dfrac{15.3 \times 10^6}{(24 - 0.5)} = 0.651 \times 10^6$ *l*/hr

Assuming a filtration rate of 6000 *l*/hr/m$^2$,

$$\text{Area of filter required} = \frac{0.651 \times 10^6}{6000} = 108.5 \text{ m}^2$$

Let $\dfrac{L}{B} = 2$

$\therefore$ $LB = 108.5 \text{ m}^2$

$\Rightarrow$ $2B.B = 108.5$

$\Rightarrow$ $B = 7.365 \text{ m} \simeq 7.5 \text{ m (say)}$

$\therefore$ $L = 2B = 2 \times 7.5 = 15 \text{ m}$

If two filter units are used then area required for one filter unit will be half of the total area of filter required.

$\therefore$ Area of one filter $= \dfrac{108.5}{2} = 54.25 \text{ m}^2$

$\therefore \quad LB = 54.25\ m^2$

$\Rightarrow \quad 2B^2 = 54.25$

$\Rightarrow \quad B = 5.208\ m \simeq 5.5\ m$ (say)

$\therefore \quad L = 2B = 2 \times 5.5 = 11\ m$

$\therefore$ Provide two filter units each of plan dimension 11 m x 5.5 m.

**Design of under-drainage system:**

The under-drainage system consists of a central pipe with number of laterals with perforations at their bottom extending in both directions.

Let area of perforations = 0.2% of filter area

$$= \frac{0.2}{100} \times 11 \times 5.5 = 0.121\ m^2$$

Let area of lateral = 3 times the area of perforations

$$= 3 \times 0.121 = 0.363\ m^2$$

Let area of central pipe = 2 times the area of lateral

$$= 2 \times 0.363 = 0.726\ m^2$$

$$\therefore \quad \text{Diameter of central pipe} = \sqrt{\frac{0.726}{\pi/4}} = 0.961\ m \simeq 1\ m \text{ (say)}$$

This central pipe is laid along the length of filter at the centre of filter bottom. Laterals will meet this central pipe at right angles.

Let spacing of laterals = 25 cm c/c.

$$\therefore \quad \text{No. of laterals} = \frac{11 \times 100}{25} = 44 \text{ on either side of central pipe.}$$

$\therefore$ Total number of laterals in each filter unit = 44 x 2 = 88

$$\text{Length of each lateral} = \frac{\text{Width of filter unit}}{2} - \frac{\text{Central pipe diameter}}{2}$$

$$= \frac{5.5}{2} - \frac{1}{2} = 2.25\ m$$

Let diameter of perforations in laterals = 10 mm = 0.010 m

$$\therefore \quad \text{No. of perforations required} = \frac{\text{Total area of perforations}}{\text{Area of one perforation}}$$

$$= \frac{0.121}{\frac{\pi}{4}(0.01)^2} = 1540.6 \text{ (Too high)}$$

If diameter of preforations = 15 mm then total number of perforations $= \dfrac{0.121}{\frac{\pi}{4}(0.015)^2} = 684.7 \simeq 685$ (say)

$$\therefore \quad \text{No. of perforations in each lateral} = \frac{685}{88} = 7.78 \simeq 8 \text{ (say)}$$

$$\therefore \quad \text{Area of preforations per lateral} = 8 \times \frac{\pi}{4}(0.015)^2 = 0.001414\ m^2$$

$\therefore$ Area of each lateral = 3 times the area of preforations in it (assumed above)

$$= 3 \times 0.001414 = 0.004242\ m^2$$

$\therefore$ Diameter of each lateral $= \sqrt{\dfrac{0.004242}{\pi/4}} = 0.0735 \text{ m} = 73.5 \text{ mm}$

$= 7.35 \text{ cm} \simeq 7.5 \text{ cm (say)}$

$\therefore$ Provide 88 laterals each of 7.5 cm diameter with centre to centre spacing of 25 cm each having 8 perforations of 15 mm size with 1 m diameter central pipe.

**Wash water:**

Let, rate of filter washing = 0.5 m/min.

$\therefore$ Wash water discharge $= \dfrac{0.5 \times 11 \times 5.5}{60} \text{ m}^3/\text{s} = 0.504 \text{ m}^3/\text{s}$

$\because$ Diameter of lateral provided = 7.5 cm = $7.5 \times 10^{-2}$ m

$$\text{Flow velocity through lateral for wash water} = \left[\frac{0.504}{88 \times \frac{\pi}{4}\left(7.5 \times 10^{-2}\right)^2}\right] = 1.3 \text{ m/s}$$

$$\text{Flow velocity in central pipe of 1 m diameter} = \frac{0.504}{\frac{\pi}{4}(1)^2} = 0.64 \text{ m/s}$$

**2.3 Describe in detail the methods employed to purify water, before supplying to the consumers.**

**[SSC JE - 2009 : 18 Marks]**

**Solution:**

**Methods of purification of water:** Before supplying to the consumers, water needs to be purified to make it suitable for drinking and domestic purposes. The various water purification methods can be broadly classified as *physical, chemical* and *biological treatment processes.*

**Physical Treatment Process:** Here water is purified by employing various physical methods. The amount of removal of impurities depends on the size and shape of the impurities, their solubility, their density, viscosity of water and so on.

**Some of the physical treatment processes are:**

- **Screening:** In this process the impurities get removed by obstructing them through screens of size less than the size of the impurities.
- **Sedimentation:** In this process the various impurities are allowed to settle down in the bottom due to gravity. Denser the particle is, more efficient will be its removal. Thus water is allowed to move slowly through the sedimentation tank so that sufficient time is there for gravitational settling of particles.
- **Filtration:** Here water is allowed to pass through a medium which entraps the fine impurities present in water and discharges clean water. The amount of impurities removed depends on the type of filter medium used. Smaller the effective size of filter openings, more efficient is the filtration and more time and head loss of water occurs.

**Chemical Treatment Process:** In this, a chemical reaction is brought about and the amount of filtration depends on the size and nature of impurities.

- **Coagulation and flocculation:** Sometimes the size of impurities is so small that it is difficult to have gravitational settling. For settling of such impurities, flocs are generated by addition of coagulants which trap these impurities. As the size of these flocs increases, they settle down due to gravity.
- **Ion Exchange:** In this method, certain heavy ions present in water are replaced by light, non-hazardous ions. It is a very efficient method of water purification.

- **Disinfection:** After water has been purified and is ready for household supply, it needs to be disinfected so that pathogenic and other harmful organisms get killed instantly and they do not get generated further in the course of supply of water from water treatment plant to the consumer. Various disinfection methods are *ozonation, UV Treatment, chlorination* etc.

**Biological Treatment Process:** For treatment of water, generally biological treatment is not given as it is ensured that all the pathogenic micro-organisms get killed in the disinfection process itself. However biological treatment is a very important process in the treatment of sewage.

**2.4 Design a rapid sand filter system for a water supply of 9 MLD to a township. All the principal components shall be designed. Enumerate your assumptions during the design steps.**

[SSC JE - 2010 : 12 Marks]

Solution:

Water to be filtered daily = 9 MLD = $9 \times 10^6$ *l*/day

Let 2% filtered water is required for back washing.

∴ Total requirement of filtered water = $1.02 \times 9 \times 10^6 = 9.18 \times 10^6$ ℓ/day

Let time required for back washing = 30 min. = 0.5 hours

∴ Requirement of filtered water per hour = $\frac{9.18 \times 10^6}{(24-0.5)} = 0.391 \times 10^6$ lt./hr

Let, rate of filteration = 6500 lt./hr/m$^2$

∴ Area of filter required = $\frac{0.391 \times 10^6}{6500} = 60.15\ m^2$

Let $\frac{L}{B} = 2$

∴ $LB = 60.15$

⇒ $2B^2 = 60.15$

⇒ $B = 5.48\ m \simeq 5.5\ m$

∴ $L = 2B = 2(5.5) = 11\ m$

If two filter units are used then, area of one filter unit,

$$= LB = \frac{60.15}{2} = 30.075\ m^2$$

⇒ $2B^2 = 30.075$

⇒ $B = 3.88\ m \simeq 4\ m$ (say)

∴ $L = 2B = 8\ m$

∴ Provide two filter units each of plan dimension 4 m × 8 m.

Design of under-drainage System:

The under-drainage consists of a central pipe with number of perforated laterals at the bottom extending in both directions.

Let Area of perforations = 0.2% of filter area

$$= \frac{0.2}{100} \times 4 \times 8 = 0.064\ m^2$$

Let area of lateral = 3 times the area of perforations = $3 \times 0.064 = 0.192\ m^2$.

Let area of central pipe = 2 times the area of lateral = $2 \times 0.192 = 0.384\ m^2$.

$$\therefore \quad \text{Diameter of central pipe} = \sqrt{\frac{0.384}{(\pi/4)}} = 0.6992 \text{ m} \simeq 0.7 \text{ m (say)}$$

This central pipe is laid along the filter length at the middle of filter bottom. Laterals will meet this central pipe at right angles.

Let spacing of lateral = 30 cm c/c

$$\therefore \quad \text{Number of laterals} = \frac{8 \times 100}{30} = 26.67 \simeq 27 \text{ on either side of central pipe.}$$

So, total number of laterals on both sides in each filter unit = 27 x 2 = 54

$$\text{Length of each lateral} = \frac{\text{Width of filter unit}}{2} - \frac{\text{Diameter of central pipe}}{2}$$

$$= \frac{4}{2} - \frac{0.7}{2} = 1.65 \text{ m}$$

Let diameter of perforations in the lateral = 10 mm

$$\therefore \quad \text{Number of perforations required} = \frac{\text{Total area of perforations}}{\text{Area of one perforations}}$$

$$= \frac{0.064}{\frac{\pi}{4}(0.01)^2} = 814.87 \simeq 815 \text{ (say)}$$

$$\therefore \quad \text{Number of perforations in each lateral} = \frac{815}{54} = 15.09 \simeq 16 \text{ (say)}$$

$$\text{Area of perforations per lateral} = 16 \times \frac{\pi}{4}(0.01)^2 = 0.001257 \text{ m}^2$$

$$\therefore \quad \text{Area of each lateral} = 3 \text{ times the area of perforations (as assumed)}$$

$$= 3 \times 0.001257 = 0.003771 \text{ m}^2$$

$$\therefore \quad \text{Diameter of each lateral} = \sqrt{\frac{0.003771}{(\pi/4)}} = 0.06929 \text{ m} = 6.929 \text{ cm} \simeq 7 \text{ cm}$$

∴ Provide 54 laterals each of 7 cm diameter with center to center spacing of 30 cm having 16 perforations of 10 mm diameter with 0.7 m diameter central pipe.

Wash Water:

Let rate of filter washing = 0.5 m/min

$$\therefore \quad \text{Wash water discharge} = \frac{0.5 \times 8 \times 4}{60} = 0.267 \text{ m}^3/\text{s}$$

Diameter of lateral provided = 7 cm

Diameter of central pipe provided = 0.7 m

$$\therefore \quad \text{So, velocity of flow through lateral} = \frac{0.267}{54 \times \frac{\pi}{4}(0.07)^2} = 1.28 \text{ m/s}$$

$$\text{Flow velocity in central pipe} = \frac{0.267}{\frac{\pi}{4}(0.7)^2} = 0.694 \text{ m/s}$$

2.5 Measures to control water pollution.

[SSC JE - 2011 : 10 Marks]

Solution:

**Measures to control water pollution:** Given below are some of the methods which can reduce the risk of water pollution:

1. **Minimizing the generation of waste:** Developing non-polluting technologies which can reduce the industrial waste generation. Apart from that, good housekeeping practices reduce the waste generation.
2. **Wastewater treatment at source only:** Treating the wastewater at the point of its generation not only reduces the load on waste treatment plants but also considerably reduces the possibility of sewage leakage in the course of their transit to the treatment plants.
3. **In-situ control of water pollution:** It includes aeration of lakes, dredging of nutrient rich sediments from eutrophic lakes etc.

2.6 Write short note on types of impurities in water in the light of domestic supply.

[SSC JE - 2014 : 15 Marks]

Solution:

**Impurities in domestic water supply:** The commonly found impurities in domestic water supply are as given below. **IS 10500:2012** lays down standards of drinking water.

(i) **Suspended solids:** These are the insoluble matter in drinking water. The suspended solids can either be organic or inorganic.

(ii) **Dissolved solids:** It is the amount of matter that remains in dissolved state and is determined by evaporating a known mass of water sample and weighing the residue left.

(iii) **Total solids:** It is the sum total of dissolved and suspended solids. It should not exceed 500 mg/*l* in domestic water supply.

(iv) **Fluoride:** It helps in preventing the decay of teeth but its excessive amount leads to mottling of teeth. It must not exceed 1 mg/*l*.

(v) **Sodium:** Sodium ($Na^+$) when present in excessive amount combines with $OH^-$ which leads to corrosion.

(vi) **Chloride:** It increases the corrosive character of water and it must not exceed 250 mg/*l*.

(vii) **Nitrate:** High concentration of nitrate ($NO_3^-$) causes methaemoglobinemia (blue baby disease) in infants. It must not exceed 45 mg/*l*.

(viii) **Iron:** It usually causes discolouration of water and must not exceed 0.3 mg/*l*.

(ix) **pH:** Potable water ideally should be neutral (pH-7). In any case, it should be in the range of 6.5 to 8.5.

(x) **Hardness:** Hardness in water leads to formation of scale in the utensils and interferes with heat exchange leading to wastage of energy. It also prevents the formation of lather with soaps thereby leading to wastage of soap also. It should not exceed 250 mg/*l* as $CaCO_3$.

(xi) **Manganese:** Similar to iron, it also causes discolouration of water and should not exceed 0.1 mg/*l*.

(xii) **Heavy metals:** Heavy metals like arsenic, cadmium, lead, chromium etc. must not be there in potable water as some of them are even carcinogenic.

## 3. Design of Sewer, Quality and Characteristics of Sewage

3.1 A combined sewer of a circular section is to be laid to serve a particular area. Calculate the size of the sewer

Area = 100 hectare, Population = 1 lakh, Rate of water supply = 135 lpcd.

Time of entry = 3 min.; Time of flow = 15 min.

Average impermeability factor = 0.5

Maximum permissible velocity = 2 m/s

Intensity of rainfall in mm/hr = $\frac{25.1 \times 30}{t+10}$

[SSC JE - 2005 : 20 Marks]

**Solution:**

Area, $A$ = 100 ha

Population = 1 lakh = $10^5$

Rate of water supply = 135 lpcd

Time of entry, $T_e$ = 3 min

Time of flow, $T_f$ = 15 min

∴ Time of concentration, $T_c = T_e + T_f = 3 + 15 = 18$ min

Average impermeability factor, $K$ = 0.5

$$\text{Intensity of rainfall (mm/hr)} = \frac{25.1 \times 30}{t+10} \text{ where } t \text{ is time of concentration in minutes}$$

i.e., $$p_c = \frac{25.1 \times 30}{18+10} = 26.89 \text{ mm/hr} = 2.689 \text{ cm/hr}$$

∴ Peak rate of runoff, $$\theta_P = \frac{1}{36} K p_c A = \frac{1}{36}(0.5)(2.689)100 = 3.735 \text{ m}^3/\text{s}$$

Total water supply = $135 \times 10^5$ lt/day

Let 80% of water suppplied gets converted to sewage.

∴ Sewage produced per day = $0.8 \times 135 \times 10^5$

$$= 108 \times 10^5 \text{ lt/day} = \frac{108 \times 10^5 \times 10^{-3} \text{m}^3}{24 \times 3600 \text{ s}} = 0.125 \text{ m}^3/\text{s}$$

Let peak sewage flow is three times the average sewage flow.

∴ Peak sewage flow = $3 \times 0.125 = 0.375$ m³/s

∴ Total maximum flow in the combined sewer, $Q = 3.735 + 0.375 = 4.11$ m³/s

Maximum permissible velocity, $v$ = 2 m/s

Let sewer is flowing 3/4th full at peak discharge with maximum permissible velocity

Let $D$ = sewer diameter

∴ Area of flow, $$A = \frac{3}{4} \cdot \frac{\pi}{4} D^2 = \frac{3\pi}{16} D^2 \quad \text{...(i)}$$

But $$A = \frac{Q}{v} = \frac{4.11}{2} = 2.055 \text{ m}^2 \quad \text{...(ii)}$$

Equating equaitons (i) and (ii),

$$\frac{3\pi}{16} D^2 = 2.055$$

⇒ $$D = 1.87 \text{ m} \simeq 1.9 \text{ m (say)}$$

∴ Sewer of diameter 1.9 m is sufficient to carry the combined peak discharge.

3.2 Calculate the diameter and discharge of a circular sewer laid at a slope of 1 in 400, running half full and with velocity 1.9 m/s. ($n$ = 0.012)

[SSC JE - 2007 : 15 Marks]

Solution:

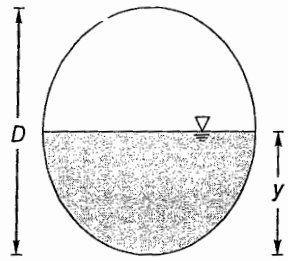


Slope of the sewer, $S = 1 \text{ in } 400 = \frac{1}{400}$

Depth of flow, $y = \frac{D}{2}$

Velocity of flow, $v = 1.9$ m/s

$n = 0.012$

Using Manning's equation.

$$v = \frac{1}{n} R^{2/3} \sqrt{S}$$

$\Rightarrow$ $$1.9 = \frac{1}{0.012} R^{2/3} \sqrt{\frac{1}{400}}$$

$\Rightarrow$ $R = 0.308$ m (= A/P)

Flow area, $$A = \frac{1}{2}\left(\frac{\pi}{4}D^2\right) = \frac{\pi}{8}D^2$$

Wetted perimeter, $$P = \frac{\pi D}{2}$$

$\therefore$ Hydraulic radius, $$R = \frac{A}{P} = \frac{\frac{\pi}{8}D^2}{\frac{\pi D}{2}} = \frac{D}{4}$$

But $R = 0.308$ m

$\Rightarrow$ $\frac{D}{4} = 0.308$

$\therefore$ Diameter of sewer = 1.232 m

Flow area, $$A = \left(\frac{\pi}{4}D^2\right)\frac{1}{2} = \frac{\pi}{8}(1.232)^2 = 0.596 \text{ m}^2$$

$\therefore$ Discharge, $Q = vA = 1.9 \times 0.596 = 1.1324 \simeq 1.13 \text{ m}^3/\text{s}$

$\therefore$ Discharge from the sewer is 1.13 $m^3/s$.

3.3 The 5 day BOD of a waste is 280 mg/*l*. The ultimate BOD is reported to be 410 mg/*l*. At what rate the waste is being oxidized?

[SSC JE - 2007 : 15 Marks]

Solution:

5 Day BOD = $L = BOD_5 = 280$ mg/*l*

$L_0$ = Ultimate BOD = 410 mg/*l*

$\because$ $L = L_0(1 - e^{-kt})$ where *k* is rate constant at base '*e*'.

$\Rightarrow$ $280 = 410(1 - e^{-k \times 5})$

$\Rightarrow$ $k = 0.23 \text{ day}^{-1}$

$\therefore$ Rate of oxidation of waste $= \frac{dL}{dt} = -kL = -0.23 \times 280 = -64.4$ mg/*l*/day

(–ve sign shows that rate decreases with time)

3.4 Write short notes on the following:

(i) Sewer (ii) Sewage

(iii) Sewerage system (iv)Drain and trench drain

[SSC JE - 2008 : 12 Marks]

Solution:

(i) **Sewer:** In wet system of sewage disposal, the sewage is carried through pipes running partially full making it open channel flow. These sewage carrying pipes are called as sewers.

(ii) **Sewage:** The waste products arising out from domestic use along with human feaces are mixed with sufficient quantity of water thereby bringing the waste in a flowable condition. This mixture of waste and water is called as sewage.

(iii) **Sewerage system:** The collective process of collecting the sewage, treating the sewage and finally disposing it off is referred to as sewerage system. It includes sewer and sewage along with sewer appurtenances.

(iv) **Drain and trench drain:**

**Drain:** It means to remove (or carry) water (rain water, waste water, agricultural water etc.) from (to) an area by redirecting its flow away from (to) the area by providing a confined flow path. This confined flow path may either be lined or unlined.

**Trench drain:** It is a type of lined drain whose top edge is flushed with the adjoining area and is used to drain out the water or to carry the fluid (chemicals etc.). Many times it is also used to carry the utility services like electricity wires, telephone lines, LAN cables etc. Covering of its top surface with a grating prevents the entry of debris into the trench drains.

3.5 Discuss, in detail the physical and chemical characteristics of sewage.

[SSC JE - 2010 : 8 Marks]

Solution:

Physical characteristics of sewage:

(i) **Odour:** Fresh sewage is almost odorless but as times elapses, it starts to emit foul gases due to decomposition of organic matter thereby making deficiency of oxygen in the sewage oxygen deficient.

(ii) **Colour:** Fresh sewage is yellowish in colour. Due to further decomposition of organic matter in sewage, its colour changes to dark brown or black. Sometimes, presence of certain specific element(s) from industrial waste may give specific colour to sewage.

(iii) **Turbidity:** Normally sewage is turbid and may also contain floating matter like match sticks, greases, oils, paper pieces etc.

(iv) **Temperature:** In general, temperature of sewage is slightly higher than the fresh water due to utilization of water which adds heat into the waste-water though to a very small extent. As the temperature of sewage increases, the dissolved oxygen content in the sewage decreases.

Chemical characteristics of sewage:

(i) **Chloride content:** The normal chloride content in domestic sewage is about 120 mg/*l*. However industrial waste may contain a higher amount of chloride.

(ii) **pH:** Fresh sewage is alkaline i.e. its pH is greater than 7. Due to decomposition of sewage, acids are produced which lowers the pH of sewage.

(iii) **Solids content:** The solids present in sewage may be classified as dissolved solids, suspended solids and settleable solids. Collectively all these types of solids are called as total solids. Dissolved solids get dissolved in sewage while suspended solids float in the sewage. That portion of total solids that settle out in the bottom of the vessel is called as settleable solids.

(iv) **Dissolved oxygen (DO):** In sewage, it must be ensured that a certain minimum amount of dissolved oxygen is always there for sustaining the aquatic life. The dissolved oxygen in the sewage goes on reducing due to decomposition of organic matter if treatment of sewage is not done. As temperature of the sewage increases, DO content decreases.

(v) **Chemical oxygen demand (COD):** It is the amount of oxygen required to oxidize the organic matter present in sewage. This COD is determined in the laboratory by treating the given waste water sample with a strong oxidizing agent (like $KMnO_4$ and $K_2Cr_2O_7$).

(vi) **Bio-chemical oxygen demand (BOD):** The organic matter present in sewage may be biologically active (i.e. biodegradable) and/or biologically inactive (or non-biodegradable). BOD is the amount of oxygen required to oxidize the biologically active i.e. bio-degradable organic matter present in sewage.

(vii) **Nitrogen content:** Nitrogen if present in sewage indicates that it contains organic matter. Normally nitrogen is present in sewage in the form of free nitrogen, organic nitrogen (albuminoid nitrogen), nitrites and nitrates. Ammonia indicates the very first stage of decomposition of organic matter. Nitrites are intermediate stage of decomposition of organic matter. Nitrates are the end product of biological decomposition of organic matter.

**3.6 Define the term BOD, COD and TDS. The 5 day 30°C BOD of sewage sample is 110 mg/*l*. Calculate its 5 days 20°C BOD. Assume the deoxygenation constant at 20°C, $k_{20}$ as 0.1.**

**[SSC JE - 2012 : 3 × 3 + 11 = 20 Marks]**

**Solution:**

**BOD:** Organic matter present in sewage is of two types viz.

(i) biologically active or biodegradable organic matter.

(ii) biologically inactive or non-biodegradable organic matter.

The amount of oxygen required for oxidation of biodegradable organic matter is called as bio-chemical oxygen demand or the BOD.

**COD:** It is the amount of oxygen required for oxidation of both biologically active and biologically inactive organic matter i.e., the amount of oxygen required for oxidation of entire organic matter.

The COD of a sewage sample is determined by oxidizing the sample with a strong oxidizing agent like potassium permagnate ($KMnO_4$) or potassium dichromate ($K_2Cr_2O_7$).

**TDS:** On filtering a sample of water, the suspended solids remain on the filter while the matter passing through the filter is considered to be dissolved. This dissolved matter left as a residue on evaporation is called as total dissolved solids (TDS).

TDS constitutes a part of total solids.

Given, at 30°C $\quad BOD_5 = 110$ mg/*l*

$k_{20} = 0.1$ day$^{-1}$ (Assuming it to be at base 10)

Now, $\quad k_T = k_{20}(1.047)^{T-20}$

$\therefore \quad k_{30} = 0.1(1.047)^{30-20} = 0.158$ day$^{-1}$

When $T = 30$°C

$$BOD_5 = L_0\left(1-10^{-k_{30}t}\right)$$

$$\Rightarrow \quad 110 = L_0\left(1-10^{-(0.158\times 5)}\right)$$

$$\Rightarrow \quad L_0 = 131.29 \text{ mg/}l$$

Ultimate BOD ($L_0$) remains the same irrespective of temperature.

$\therefore$ When $T = 20$°C, $\quad L_0 = 131.29$ mg/*l*

$\therefore$ $BOD_5 = L_0\left(1-10^{-k_{20}t}\right)$

$\Rightarrow$ $BOD_5 = 131.29\,(1-10^{-0.1\times 5}) = 89.77$ mg/$l$

$\therefore$ $BOD_5$ at 20° = 89.77 mg/$l$

## 4. Treatment and Disposing of Sewage

**4.1 What is the mechanism involved in treatment of waste water (sewage) by septic tank?**

[SSC JE - 2005 : 10 Marks]

Solution:

**Treatment of sewage by septic tank:** In septic tank, the treatment of sewage is carried out by anaerobic decomposition. Septic tank is a sort of sedimentation tank with detention period ranging from 12 hours to 36 hours. The settled sludge gets digested in the bottom of the tank. Anaerobic decomposition evolves obnoxious gases and thus the septic tank is covered with a lid provided with a shaft for the escape of gases so formed. The digested sludge at the bottom of the tank is removed periodically (usually in intervals of 3 months or 6 months).

Septic tank is required where there is no sewer system for disposing off the wastes.

**4.2 Design a septic tank for a small colony of 300 persons with average daily sewage flow of 85 litres per head. Detention period is 30 hours. Clearing interval is 6 months.**

[SSC JE - 2009 : 12 Marks]

Solution:

Population = 300

Average daily sewage flow = 85 litres per head

Detention period, $t_d$ = 30 hours

Cleaning interval = 6 months

Sewage produced per day = 85 × 300 = 25500 litres/day

$\because$ Detention period is 30 hours and thus sewage produced in 30 hours

$$= \frac{25500}{24}\times 30 = 31875 \text{ litres} = 31.875 \text{ m}^3$$

Let rate of sludge deposition in septic tank = 30 lit/capita/year

$\therefore$ In the given cleaning interval of 6 months, volume of sludge deposited in the septic tank

$= 30 \times 300 \times 0.5 = 4500$ lit. $= 4.5$ m$^3$

$\therefore$ Total volume of septic tank required

$= 31.875 + 4.5 = 36.375$ m$^3$

Let depth of tank = 1.5 m

$\therefore$ Plan area of tank $= \dfrac{36.375}{1.5} = 24.25$ m$^2$

Let $\dfrac{L}{B} = 2$

$\therefore$ $L = 2B$

$\therefore$ $LB = 24.25$

$\Rightarrow$ $(2B)\,B = 24.25$

$\Rightarrow$ $B = 3.482$ m

$\therefore$ $L = 2B = 2\,(3.482) = 6.964$ m

Let a free board of 300 mm is provided.

$\therefore$ Overall depth of tank = 1.5 + 0.3 = 1.8 m

Width of tank = 3.482 m $\simeq$ 3.5 m

Length of tank = 6.964 m $\simeq$ 7 m

$\therefore$ Size of septic tank = 7 m × 3.5 m × 1.8 m

## 5. Air and Sound Pollution

**5.1 Define air pollution. Enlist natural and man made air pollution. What are the effects of air pollution on human, plants and materials?**

[SSC JE - 2012 : 5 + 5 + 10 = 20 Marks]

**Solution:**

**Air pollution:** When the air gets contaminated with such substances so that the resulting air poses life threat to humans and other living organisms then this is called as air pollution. These substances which pollute the air are called as air pollutants.

**Natural air pollution:** Natural air pollution is caused due to:

(i) duststroms

(ii) volcanoes spreading ash and other toxic gases in the environment

**Man made air pollution:** Manmade air pollution is caused due to:

(i) emissions from automobiles.

(ii) industrial emissions.

(iii) dust originating from construction sites.

(iv) open air burning of agricultural wastes and other refuse.

(v) excessive use of CFC as refrigerant.

(vi) burning of coal in thermal power plants.

**Effects of air pollution:** Air pollution has many hazardous effects on humans, plants and other living beings. These are enumerated below:

(i) **Sulphur dioxide** causes irritation when inhaled and has an adverse effect on the mucous membrane. It increases the breathing rate and causes oxygen deficiency.

(ii) **Hydrogen sulphide** is a foul smelling gas and causes headache, sleeplessness and conjunctivitis along with pain in the eye. Higher concentration of this pollutant may lead to blockage of oxygen transfer in humans.

(iii) **Carbon monoxide:** It results due to incomplete combustion of coal. When inhaled, it replaces oxygen in haemoglobin and forms carboxy-haemoglobin (CO.Hb) and thus human tissues gets devoid of oxygen which may lead to death.

(iv) **Oxides of nitrogen:** There area total of five oxides of nitrogen viz. $N_2O$, NO, $NO_2$, $NO_3$ and $N_2O_5$. Among these, only the NO and $NO_2$ are injurious to human health. These cause nasal and eye irritation along with respiratory disorder.

(v) **Lead:** Lead causes irritation to mucous membranes of nose, throat and lungs. Lead has fatal effect on gastrointestinal tract, kidney and lever. It retards mental growth.

(vi) **Fluorides:** Hydrogen fluoride and other fluorides cause fluorosis in cattle. Certain varieties of fluorides are highly irritant and corrosive in nature.

(vii) **Benzene:** Benzene and other aromatic hydrocarbons cause cancer.

■■■■

# Unit IX Theory of Structures

## 1. Properties of Metals, Stress & Strain

1.1 A bar 40 mm in diameter is subjected to a tensile force of 40000 kg. The extension of bar measured over a gauge length of 200 mm was 0.318 mm. The decrease in diameter was found to be 0.02 mm. Calculate the values of Young's modulus of elasticity and modulus of rigidity of the material.

[SSC JE - 2007 : 15 Marks]
[SSC JE - 2009 : 10 Marks]

**Solution:**

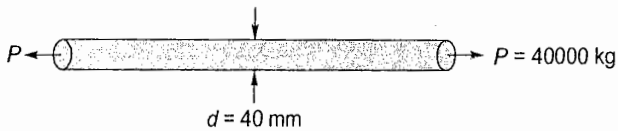


Pull, $P = 40000 \text{ kg} = 400 \text{ kN}$

Gauge length, $l = 200 \text{ mm}$

Extension, $\Delta l = 0.318 \text{ mm}$

$\therefore$ Strain, $\epsilon = \dfrac{\Delta l}{l} = \dfrac{0.318}{200} = 1.59 \times 10^{-3}$

Cross-sectional area of bar, $A = \dfrac{\pi}{4} d^2 = \dfrac{\pi}{4}(0.04)^2 = 1.2566 \times 10^{-3} \text{ m}^2$

$\therefore$ Stress, $\sigma = \dfrac{P}{A} = \dfrac{400 \times 10^3}{1.2566 \times 10^{-3}} \text{ N/m}^2 = 318.319 \times 10^6 \text{ N/m}^2$

$\therefore$ Modulus of elasticity, $E = \dfrac{\sigma}{\epsilon} = \dfrac{318.319 \times 10^6}{1.59 \times 10^{-3}} \text{ N/m}^2 = 200.2 \times 10^9 \text{ N/m}^2 \simeq 2 \times 10^5 \text{ N/m}^2$

Given; Decrease in diameter, $\Delta d = 0.02 \text{ mm}$

$\therefore$ Lateral strain, $\dfrac{\Delta d}{d} = \dfrac{0.02}{40} = 5 \times 10^{-4}$

$\therefore$ Poisson's ratio, $\mu = \dfrac{\Delta d/d}{\epsilon} = \dfrac{5 \times 10^{-4}}{1.59 \times 10^{-3}} = 3.145 \times 10^{-1} \simeq 0.315$

$\therefore$ Modulus of rigidity, $G = \dfrac{mE}{2(m+1)}$ where $\mu = \dfrac{1}{m} = 0.315$

$$= \frac{E}{2\left(1 + \frac{1}{m}\right)} = \frac{2 \times 10^5}{2(1.315)}$$

$$= 0.7605 \times 10^5 \text{ N/mm}^2 = 7.6 \times 10^4 \text{ N/mm}^2$$

1.2 When a bar of certain material 40 cm square is subjected to an axial pull of 100,000 N the extension on a gauge length of 200 mm is 0.1 mm and the decrease in each side of the square is 0.005 mm. Calculate Young's modulus, Poisson's ratio, shear modulus and bulk modulus for the material.

[SSC JE - 2008 : 10 Marks]

Solution:

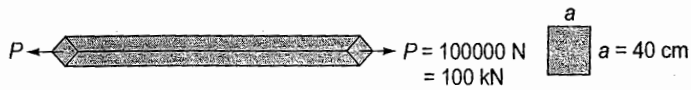


Size of square bar = 40 cm × 40 cm = 0.4 m × 0.4 m

∴ Cross-sectional area of bar, $A = 0.4 \times 0.4 = 0.16\ m^2$

Gauge length, $l = 200$ mm

Extension, $\Delta l = 0.1$ mm

∴ Strain, $\epsilon = \dfrac{\Delta l}{l} = \dfrac{0.1}{200} = 5 \times 10^{-4}$

Decrease in side of square, $\Delta a = 0.005$ mm

∴ Lateral strain, $\dfrac{\Delta a}{a} = \dfrac{0.005}{400} = 1.25 \times 10^{-5}$

∴ Poisson's ratio, $\mu = \dfrac{\Delta a/a}{\epsilon} = \dfrac{1.25 \times 10^{-5}}{5 \times 10^{-4}} = 0.025$

∴ Modulus of elasticity, $E = \dfrac{\sigma}{\epsilon} = \dfrac{P/A}{\epsilon} = \dfrac{\dfrac{100 \times 1000}{0.16}}{5 \times 10^{-4}} = 1250\ N/mm^2$

Shear modulus, $G = \dfrac{mE}{2(m+1)} = \dfrac{E}{2(1+\mu)} = \dfrac{1250}{2(1+0.025)} = 609.76\ N/mm^2$

Bulk modulus, $K = \dfrac{mE}{3(m-2)} = \dfrac{E}{3(1-2\mu)} = \dfrac{1250}{3(1-2 \times 0.025)} = 438.6\ N/mm^2$

## 2. Shear Force and Bending Moment

2.1 Draw SF and BM diagrams for the beam with applied moments as shown in figure.

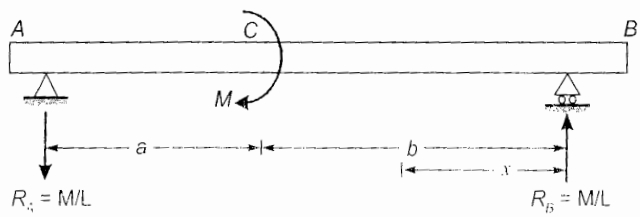


[SSC JE - 2007 : 15 Marks]

Solution:

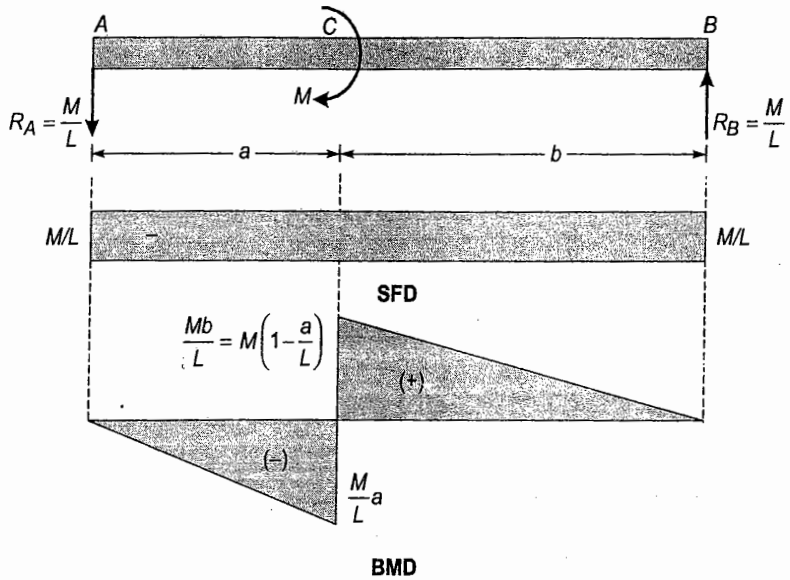


$\Sigma M_B = 0$

$\Rightarrow \quad R_A(L) + M = 0$

$\Rightarrow \quad R_A = -\frac{M}{L}$ i.e., $R_A$ is acting downwards

$\Sigma F_y = 0$

$\Rightarrow \quad R_A + R_B = 0$

$\Rightarrow \quad R_B = -R_A = \frac{M}{L}(\uparrow)$

Portion AC: $0 \le x \le a$

$$\text{SF} = -\frac{M}{L}$$

$$\text{BM} = -\frac{M}{L}x$$

At $x = a$, $\quad \text{BM} = -\frac{M}{L}a$

Portion CB: $a \le x \le L$

$$\text{SF} = -\frac{M}{L}$$

$$\text{BM} = -\frac{M}{L}x + M = M\left(1-\frac{x}{L}\right)$$

At $x = a$, $\quad \text{BM} = M\left(1-\frac{a}{L}\right)$

At $x = L$, $\quad \text{BM} = 0$

2.2 Draw SF and BM diagrams for the beam having overhangs on both sides and loaded as shown in figure.

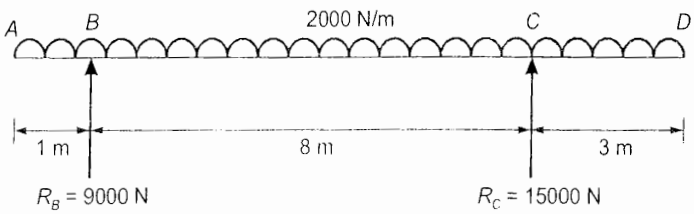


[SSC JE - 2008 : 20 Marks]

Solution:

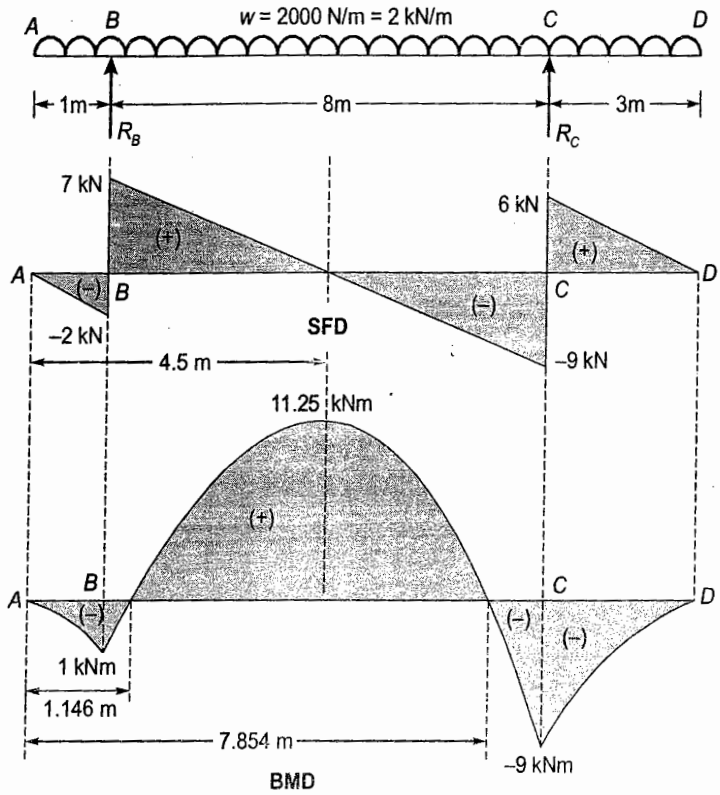


$\Sigma F_y = 0$

$\Rightarrow \quad R_B + R_C = 2(12) = 24 \text{ kN}$ ...(i)

$\Sigma M_C = 0$

$\Rightarrow \quad R_B(8) + 2 \times 3 \times \frac{3}{2} = 2 \times 9 \times \frac{9}{2}$

$\Rightarrow \quad R_B = 9 \text{ kN}$

$\therefore \quad R_C = 24 - R_B = 24 - 9 = 15 \text{ kN}$

**Portion AB:** $0 \le x \le 1$ m

$\text{SF} = -2x$ (Linear variation)

$\text{BM} = -2x\frac{x}{2} = -x^2$ (Parabolic variation)

Portion BC: $1 \text{ m} \le x \le 9$ m

$\text{SF} = -2x + R_B = 9 - 2x$ (Linear variation)

$\text{BM} = -2x\frac{x}{2} + R_B(x-1)$

$= -2x\frac{x}{2} + R_B(x-1)$

$= 9x - 9 - x^2$ (Parabolic variation)

At $x = 1$ m, SF = 7 kN

BM = –1 kNm

At $x = 9$ m, SF = –9 kN

BM = –9 kNm

when SF = 0

$\Rightarrow \quad 9 - 2x = 0$

$\Rightarrow \quad x = 4.5$ m (from $A$)

$\therefore$ BM is maximum at $x = 4.5$ m

$\therefore \quad BM_{max} = 9(4.5) - 9 - (4.5)^2 = 11.25$ kNm

Portion CD: $9x \le x \le 12$ m

$$SF = -2x + R_B + R_C$$
$$= -2x + 24 \quad \text{(Linear variation)}$$

$$BM = -2\frac{(12-x)^2}{2} = -(12-x)^2 \quad \text{(Parabolic variation)}$$

At $x = 9$ m, $SF = -2(9) + 24 = 6$ kN

$BM = -(12-9)^2 = -9$ kNm

At $x = 12$ m, $SF = -2(12) + 24 = 0$

$BM = -(12-12) = 0$

Point of inflection where BM changes sign i.e., BM = 0

$$9x - 9 - x^2 = 0$$

$\therefore \quad x = 1.146$ m, $2.784$ m

**2.3 Draw SF and BM diagrams for beam loaded with varying load as shown in figure.**

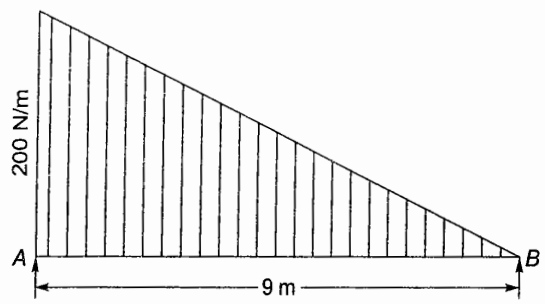


**[SSC JE - 2009 : 10 Marks]**

**Solution:**

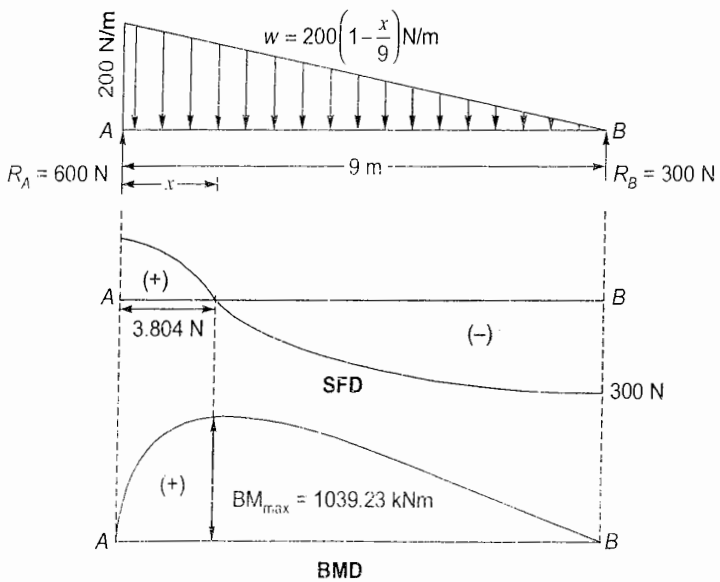

Let $x$ is measured from $A$.

$\therefore$ Variation of loading, $w = 200\left(1-\frac{x}{9}\right)$ N/m $\forall\ 0 \le x \le 9$ m

$\Sigma F_y = 0$

$\Rightarrow$ $R_A + R_B = \frac{1}{2}(200)9 = 900$ N ...(i)

$\Sigma M_B = 0$

$\Rightarrow$ $R_A(9) = \frac{1}{2}(200)9\left(\frac{2}{3}\right)9$

$\Rightarrow$ $R_A = 600$ N

$\therefore$ $R_B = 900 - R_A = 900 - 600 = 300$ N

Shear force at distance '$x$' from $A = SF_x$

$$= R_A - \frac{1}{2}\left[200+200\left(1-\frac{x}{9}\right)\right]x$$

$$= 600 - 100\left[2-\frac{x}{9}\right]x$$

$$= 600 - 200x + \frac{100x^2}{9}$$ (Which is parabolic variation)

$$= \frac{100x^2}{9} - 200x + 600$$

When $SF_x = 0$

$\Rightarrow$ $100\frac{x^2}{9} - 200x + 600 = 0$

$\Rightarrow$ $x = 3.804$ m

(other value $x = 14.196$ m is inadmissible being greater than span of 9 m)

Bending moment at '$x$' = $BM_x$

$$= R_A x - \frac{1}{2}\left[200+200\left(1-\frac{x}{9}\right)\right]x\left[\frac{2\times 200+200\left(1-\frac{x}{9}\right)}{200+200\left(1-\frac{x}{9}\right)}\right]\frac{x}{3}$$

$$= 600x - 100\left[2-\frac{x}{9}\right]\left[\frac{400+200\left(1-\frac{x}{9}\right)}{200+200\left(1-\frac{x}{9}\right)}\right]\frac{x^2}{3}$$

$$= 600x - 100\left(2-\frac{x}{9}\right)\left(\frac{x^2}{3}\right)\left[\frac{3-\frac{x}{9}}{2-\frac{x}{9}}\right]$$

$$= 600x - \frac{100}{3}x^2\left(3-\frac{x}{9}\right)$$

$$= 600x - 100x^2 + \frac{100}{27}x^3$$

$$= 100\left(\frac{x^3}{27} - x^2 + 6x\right)$$ (Which is cubic variation)

For maximum BM, $\dfrac{dBm_x}{dx} = 0$

$\Rightarrow \quad 100\left[\dfrac{x^2}{9} - 2x + 6\right] = 0$

$\Rightarrow \quad x = 3.804\text{ m}$

which is the same point where shear force becomes zero.

Thus maximum bending moment point corresponds to zero shear force

$\therefore \quad BM_{max} = 100\left[\dfrac{3.804^3}{27} - 3.804^2 + 6(3.804)\right] = 1039.23\text{ kNm}$

Also since BM does not change sign, no point of inflection.

**2.4 Draw SF and BM diagram for the beam shown in figure.**

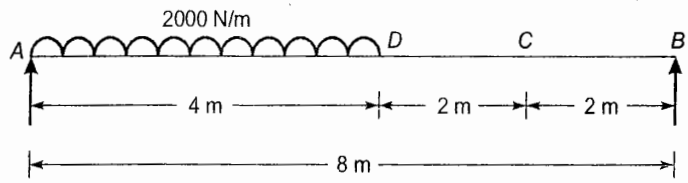


**[SSC JE - 2010 : 10 Marks]**

**Solution:**

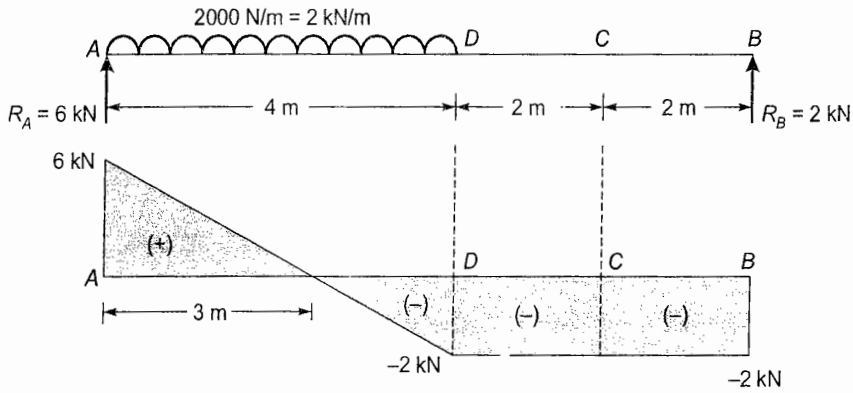


**SFD**

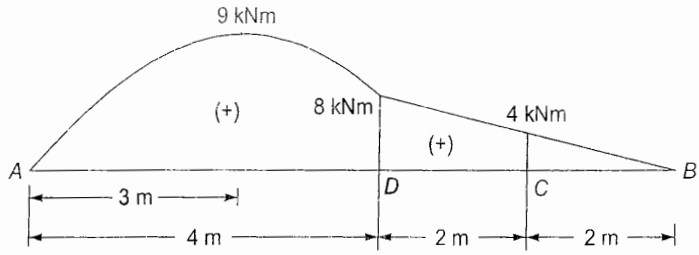


**BMD**

$R_A + R_B = 2 \times 4 = 8\text{ kN}$

$\Sigma M_B = 0$:

$\Rightarrow \quad R_A(8) = 2 \times 4 \times 6$

$\Rightarrow \quad R_A = 6\text{ kN}$

$\therefore \quad R_B = 8 - R_A = 8 - 6 = 2\text{ kN}$

Let $x$ = Distance of any point on beam measured from $A$.

Portion AD: $0 \le x \le 4$ m

$$SF = R_A - x = 6 - 2x$$
$$SF_{(x=0)} = 6 \text{ kN} = SF_A$$
$$SF_{(x=4)} = -2 \text{ kN} = SF_D$$

$$BM = R_A x - 2x\frac{x}{2} = 6x - x^2$$

Portion DB: $4 \text{ m} \le x \le 8$ m

$$SF = R_A - 4 \times 2 = 6 - 8 = -2 \text{ kN}$$
$$SF_{(x=6)} = -2 \text{ kN} = SF_C$$
$$SF_{(x=8)} = -2 \text{ kN} = SF_B$$
$$BM = R_A x - 4 \times 2\,(x-2) = 6x - 8(x-2) = 16 - 2x$$
$$BM_D = 6(4) - (4)^2 = 8 \text{ kNm}$$
$$BM_C = 16 - 2(6) = 4 \text{ kNm}$$
$$SF = 0 \Rightarrow x = 3 \text{ m}$$
$$BM_{(x=3)} = 6(3) - 3 = 9 \text{ kNm}$$

i.e., $BM_{max} = 9$ kNm

2.5 Draw the shear force and bending moment diagrams for the beam shown in figure.

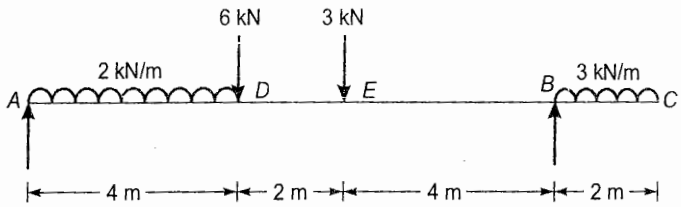


[SSC JE - 2012 : 20 Marks]

Solution:

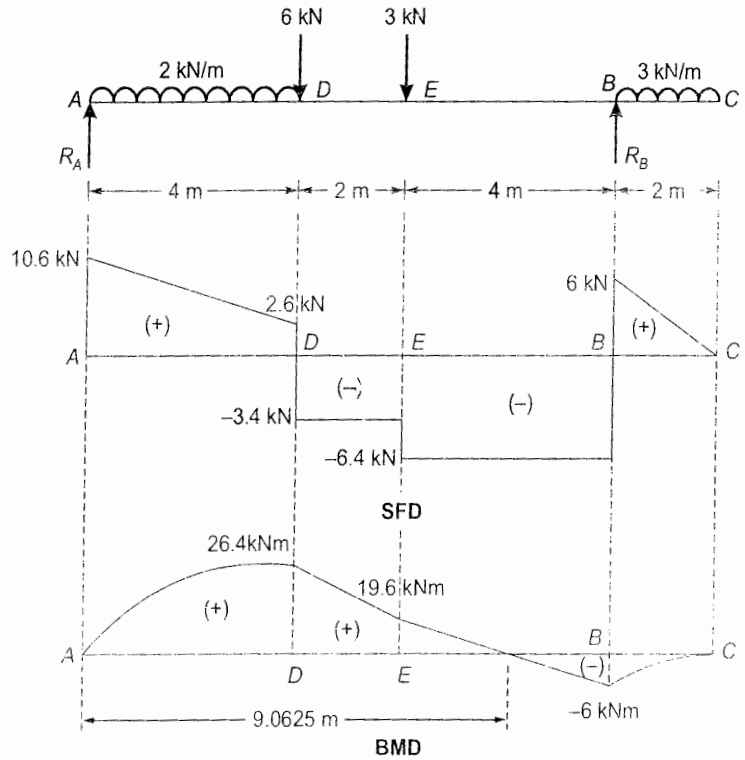

$\Sigma F_y = 0$

$\Rightarrow \quad R_A + R_B = 2 \times 4 + 6 + 3 + 3 \times 2 = 23$ kN ...(i)

$\Sigma M_A = 0$

$\Rightarrow \quad R_B(10) = 2 \times 4 \times 2 + 6 \times 4 + 3 \times 6 + 3 \times 2 \times 1$

$\Rightarrow \quad R_B = 12.4$ kN

$\therefore \quad R_A = 23 - R_B = 23 - 12.4 = 10.6$ kN

**Portion *AD***: $0 \le x \le 4$ m

$SF = R_A - 2x = 10.6 - 2x$ (Linear)

when $SF = 0, x = 5.3$ m $> 4$ m (Inadmissible)

At $x = 4$ m, $SF = 2.6$ kN i.e., $SF_A = 10.6$ kN and $SF_D = 2.6$ kN

$BM = R_A x - 2x\frac{x}{2} = 10.6x - x^2$ (Parabolic)

Maximum BM will occur where SF is zero i.e., $x = 5.3 > 4$ m (Inadmissible)

At $x = 4$ m, $BM = 10.6(4) - 4^2 = 26.4$ kNm $= BM_D$ and $BM_A = 0$

**Portion *DE***: $4 \text{ m} \le x \le 6$ m

$SF = R_A - 2 \times 4 - 6 = 10.6 - 8 - 6 = -3.4$ kN $= SF_D = SF_E$ (Constant)

$BM = R_A x - 2 \times 4 \times (x - 2) - 6(x - 74)$

$= 10.6x - 8x + 16 - 6x + 24$

$= -3.4x + 40$ (Linear variation)

At $x = 4$ m, $BM = -3.4(4) + 4 = 26.4$ kNm $= BM_D$

At $x = 6$ m, $BM = -3.4(6) + 40 = 19.6$ kNm $= BM_E$

**Portion *EB***: $6\text{m} \le x \le 10$ m

$SF = R_A - 2 \times 4 - 6 - 3$

$= 10.6 - 8 - 6 - 3 = -6.4$ kN $= SF_E = SF_B$ (Constant)

$BM = R_A x - 2 \times 4(x - 2) - 6(x - 4) - 3(x - 6)$

$= -6.4x + 58$ (Linear variation)

At $x = 6$ m, $BM = 19.6$ kNm $= BM_E$

At $x = 10$ m, $BM = -6$ kNm $= BM_B$

$BM = 0$

$\Rightarrow \quad 6.4x = 58$ or $x = 9.0625$ m

Portion *BC*: $10 \text{ m} \le x \le 12$ m

$SF = R_A - 2 \times 4 - 6 - 3 + R_B - 3(x - 10)$

$= 10.6 - 8 - 9 + 12.4 - 3x + 30$

$= 36 - 3x$ (Linear variation)

At $x = 10$ m, $SF = 6$ kN $= SF_B$

At $x = 12$ m, $SF = 0 = SF_C$

$BM = -3\frac{(12 - x)^2}{2}$

$= -\frac{3}{2}(12 - x)^2$ (Parabolic variation)

At $x = 10$ m, $BM = -6$ kNm $= BM_B$

At $x = 12$ m, $BM = 0 = BM_C$

2.6 Analyze the beam shown in figure and determine the end moments. Plot the BMD on the tension side.

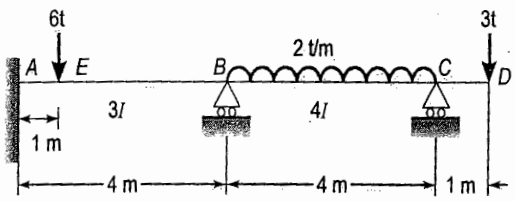


[SSC JE - 2013 : 30 Marks]

Solution:

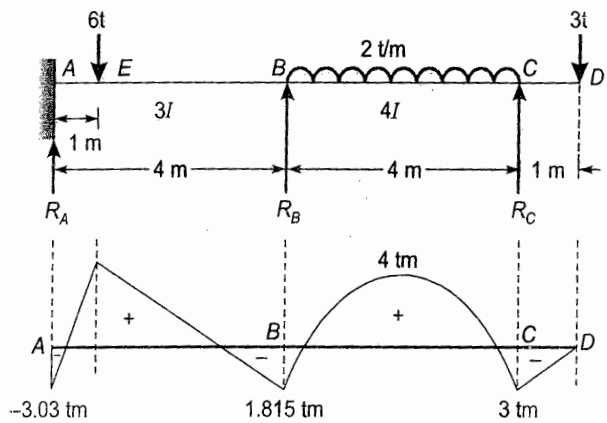


**BMD**

Analysing the beam using moment distribution method.

$$M_{FAB} = -\frac{6\times1\times3^2}{4^2} = -3.375 \text{ tm}$$

$$M_{FBA} = +\frac{6\times3\times1^2}{4^2} = +1.125 \text{ tm}$$

$$M_{FBC} = -\frac{2\times4^2}{12} = -2.67 \text{ tm}$$

$$M_{FCB} = +\frac{2\times4^2}{12} = +2.67 \text{ tm}$$

$$M_{FCD} = -3 \times 1 = -3 \text{ tm}$$

Distribution Factors:

| Joint | Members | Stiffness (k) | D.F |
|---|---|---|---|
| B | BA | $\frac{4E(3I)}{4} = 3EI$ | 0.429 |
| | BC | $\frac{4E(4I)}{4} = 4EI$ | 0.571 |
| C | CB | $\frac{4E(4I)}{4} = 4EI$ | 1 |
| | CD | 0 | 0 |

Moment Distribution:

| Joint | A | | B | | C | | D |
|---|---|---|---|---|---|---|---|
| D.F. | | 0.429 | 0.571 | 1 | 0 | 0 | |
| Member | AB | BA | BC | CB | CD | DC | |
| FEM ($t_m$) | –3.375 | 1.125 | –2.67 | 2.67 | –3 | 0 | |
| | | 0.662805 +0.882195 | | 0.33 | 0 | 0 | |
| | +0.3314 | | 0.165 | | | | |
| | | 0.071 | 0.094 | | | | |
| | 0.0355 | | | | | | |
| | –3.028 | 1.8125 | –1.8125 | 3 | –3 | 0 | |

$\therefore$

$$M_{AB} = -3.028 \text{ tm}$$
$$M_{BA} = 1.8125 \text{ tm}$$
$$M_{BC} = -1.8125 \text{ tm}$$
$$M_{CB} = 3 \text{ tm}$$
$$M_{CD} = -3 \text{ tm}$$
$$M_{DC} = 0$$

Alternative solution by slope deflection method:

$$M_{AB} = M_{FAB} + \frac{2E}{4}(3I)(\theta_B) = -3.375 + 1.5\,EI\theta_B \qquad (\because \theta_A = 0)$$

$$M_{BA} = M_{FBA} + \frac{2E}{4}(3I)(2\theta_B) = 1.125 + 3EI\theta_B$$

$$M_{BC} = -2.67 + \frac{2E}{4}(4I)(2\theta_B + \theta_C) = -2.67 + 4EI\theta_B + 2EI\theta_C$$

$$M_{CB} = 2.67 + \frac{2E}{4}(4I)(2\theta_C + \theta_B) = 2.67 + 2EI\theta_B + 4EI\theta_C$$

$\Sigma M_B = 0$

$\Rightarrow \quad M_{BA} + M_{BC} = 0$

$\Rightarrow \quad 1.125 + 3EI\theta_B - 2.67 + 4EI\theta_B + 2EI\theta_C = 0$

$\Rightarrow \quad 7EI\theta_B + 2EI\theta_C = 1.545 \qquad$ ...(i)

$\Sigma M_C = 0$

$\Rightarrow \quad M_{CB} + M_{CD} = 0$

$\Rightarrow \quad 2.67 + 2EI\theta_B + 4EI\theta_C - 3 = 0$

$\Rightarrow \quad EI\theta_B + 2EI\theta_C = 0.165 \qquad$ ...(ii)

From eq. (i) and (ii).

$$EI\theta_B = 0.23$$
$$EI\theta_C = -0.0325$$

$\therefore \quad M_{AB} = -3.03 \text{ tm}$

$$M_{BA} = 1.815 \text{ tm}$$
$$M_{BC} = -1.815 \text{ tm}$$
$$M_{CB} = 3 \text{ tm}$$

2.7 Draw the shear force and bending moment diagram and label the values of the largest positive and negative shearing forces and bending moments for the beams with overhang as shown in figure.

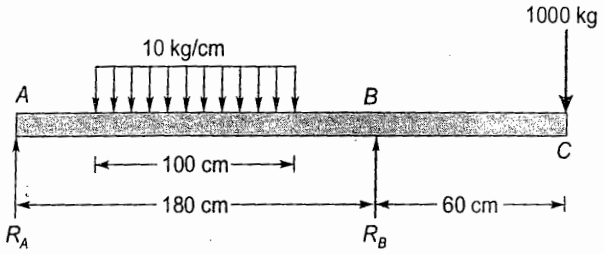


[SSC JE - 2014 : 30 Marks]

**Solution:**

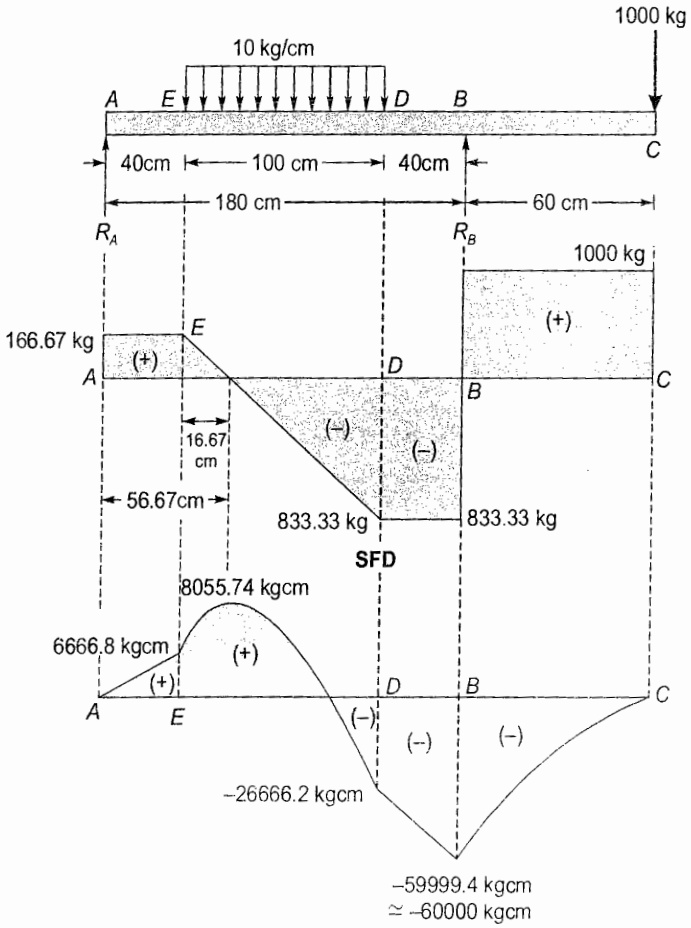


∵ Relative position of UDL either from support $A$ or $B$ is not given.

∴ Assume UDL to be centrally located on span $AB$.

$$\Sigma F_y = 0$$

$$\Rightarrow \quad R_A + R_B = 10 \times 100 + 1000 = 2000 \text{ kg}$$

$$\Sigma M_A = 0$$

$$\therefore \quad R_B(180) = 10 \times 100 \times (40 + 50) + 1000\,(240)$$

$$\Rightarrow \quad R_B = 1833.33 \text{ kg}$$

$$\therefore \quad R_A = 2000 - R_B = 166.67 \text{ kg}$$

Shear Force:

$$0 < x < 40$$
$$SF = R_A = 166.67 \text{ kg}$$
$$40 < x < 140$$
$$SF = R_A - 10(x - 40))$$
$$SF_D = 166.67 - 10(140 - 40) = 833.33 \text{ kg}$$
$$180 < x < 240$$
$$SF = R_A + R_B - 10 \times 100 = 1000 \text{ kg}$$
$$SF_C = SF_B = 1000 \text{ kg}$$
$$SF = 0, BM_{max}$$
$$166.67 - 10(x - 40) = 0$$
$$x = 56.67 \text{ cm}$$

Bending Moment:

$$0 < x < 40$$
$$BM = R_A x$$
$$BM_E = 166.67 \times 40 = 6666.8 \text{ kgcm}$$
$$180 < x < 240$$
$$BM = R_A x + R_B (x - 180) - 10 \times 100 (x - 90)$$
$$BM_{B\,(x = 180)} = -59999.4 \text{ kgcm} \simeq -60000 \text{ kg cm}$$
$$BM_C = 0$$
$$40 < x < 140$$
$$BM = R_A x - \frac{10(x-40)^2}{2}$$
$$BM_{(x = 56.67)} = BM_{max} = +8055.74 \text{ kgcm}$$
$$BM_{(x = 140)} = -26666.2 \text{ kg cm}$$

(Parabolic variation)

## 3. Bending and Shear Stresses

3.1 The I-beam shown in figure is simply supported at its ends over a 4 m span and carries central load of 50000 N which acts through the centroid, the line of action being as shown in figure. Calculate the maximum stress.

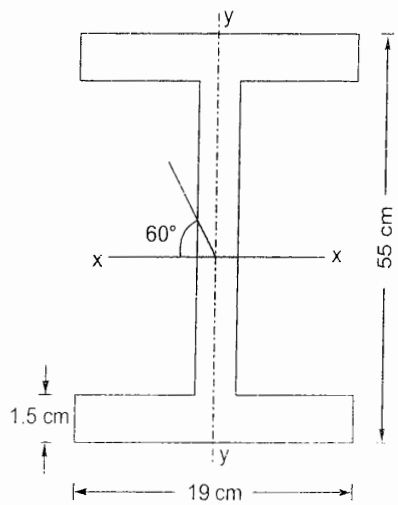


[SSC JE - 2007 : 15 Marks]

**Solution:**

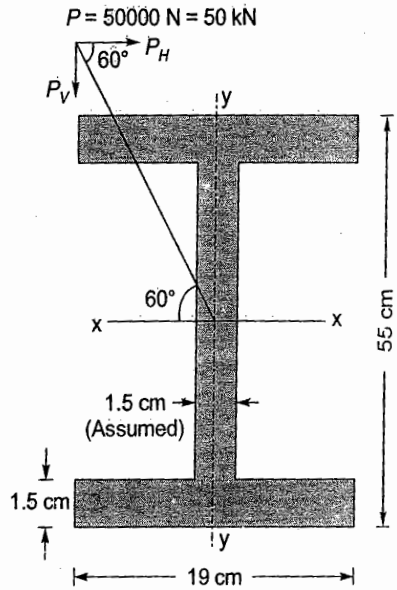


$$P_H = P\cos 60° = 50 \times \frac{1}{2} = 25 \text{ kN}$$

$$P_v = P\sin 60° = 50 \times \frac{\sqrt{3}}{2} = 25\sqrt{3} \text{ kN}$$

Horizontal force ($P_H$) will cause torsion in beam and vertical force ($P_v$) will cause bending in beam.

∴ Torsion moment, $$T = P_H \times \frac{55\text{cm}}{2} = (25 \text{ kN})\left(\frac{0.55}{2}\right) = (25 \text{ kN})\left(\frac{0.55}{2}\right) = 6.875 \text{ kNm}$$

Bending moment, $$M = \frac{P_V L}{4} = \frac{25\sqrt{3} \times 4}{4} = 25\sqrt{3} \text{ kNm}$$

$$I_{xx} = 190 \times \frac{550^3}{12} - (190 - 15)\frac{(550 - 2 \times 15)^3}{12}$$

$$= 26.343 \times 10^8 - 20.505 \times 10^8 = 5.838 \times 10^8 \text{ mm}^4$$

$$I_{yy} = 550 \times \frac{190^3}{12} - (550 - 2 \times 15)\frac{(190 - 15)^3}{12}$$

$$= 3.144 \times 10^8 - 2.322 \times 10^8 = 0.822 \times 10^8 \text{ mm}^4$$

∴ Polar moment of inertia, $$J = I_{xx} + I_{yy} = (5.838 + 0.822) \times 10^8 \text{ mm}^4$$
$$= 6.66 \times 10^8 \text{ mm}^4$$

∴ Maximum shear stress due to torsion is given by,

$$\frac{f_s}{r} = \frac{T}{J}$$

⇒ $$f_{s\,max} = \frac{T}{J} r = \frac{6.875 \times 10^6}{6.66 \times 10^8} \times \left(\frac{550}{2}\right) = 2.84 \text{ N/mm}^2$$

Maximum bending stress is given by.

$$\frac{f}{y} = \frac{M}{I}$$

$$\Rightarrow \qquad f_{b\,max} = \frac{M}{I_{xx}}y = \frac{25\sqrt{3}\times10^6}{5.838\times10^8}\times\left(\frac{550}{2}\right) = 20.4 \text{ N/mm}^2$$

Also, at supports shear force is maximum and thus there maximum shear stress will also occur.

Maximum shear force, $V = \frac{P_v}{2} = \frac{25\sqrt{3}}{2} = 12.5\sqrt{3} \text{ kN} = 21.65 \text{ kN}$ (due to $P_v$)

Maximum shear force due to $P_H(H) = \frac{P_H}{2} = \frac{25}{2} = 12.5 \text{ kN}$

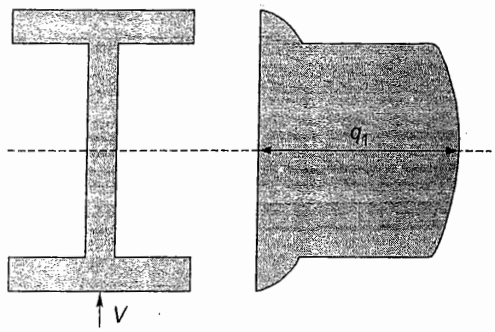


Shear stress distribution due to vertical shear force (V)

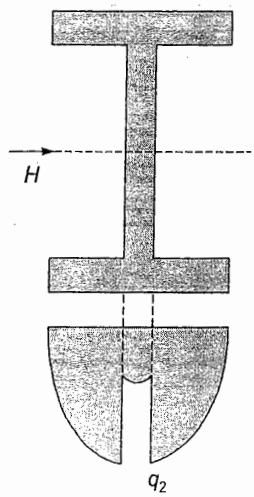


Shear stress distribution due to horizontal shear force (H)

Let $q_1$ = Maximum shear stress due to vertical shear force ($V$)

$$= \frac{V}{8I_{xx}}\left(\frac{B}{t_w}\left(D^2-d^2\right)+d^2\right)$$

$$= \frac{12.5\sqrt{3}\times10^3}{8\times5.830\times10^8}\left[\frac{190}{15}\left(550^2-520^2\right)+520^2\right] = 3.14 \text{ N/mm}^2$$

$q_2$ = Maximum shear stress due to horizontal shear force ($H$)

$$= \frac{H}{I_{yy}b}\left(A\bar{x}\right)$$

$b = 2 \times 15 = 30$ mm

$$A\bar{x} = 2\times15\left(\frac{190}{2}-\frac{15}{2}\right)\left(\frac{190}{2}-\frac{15}{2}\right)\frac{1}{2} = 114843.75 \text{ mm}^3$$

$$\therefore \qquad q_2 = \frac{12.5\times10^3}{0.822\times10^8\times30}(114843.75) = 0.583 \text{ N/mm}^2$$

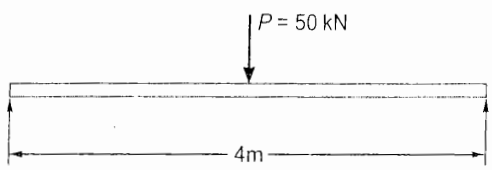

$\because$ At supports, shear stress, $q_1$ and $q_2$ are acting at different locations of the beam section and thus they cannot be added up.

At mid-span section,

maximum bending stress = 20.4 N/mm$^2$

and maximum shear stress = 2.84 N/mm$^2$

## 4. Deflection of Beams

4.1 Determine the slope and deflection at the free end of the cantilever loaded as shown in figure. Take $I$ = 10,000 cm$^4$ and $E$ = 2.1 × 10$^6$ kg/cm$^2$.

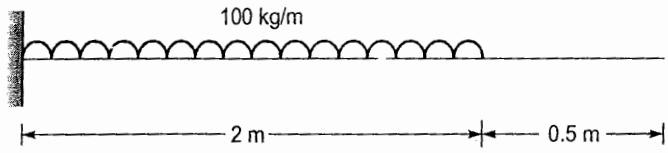


[SSC JE - 2005 : 15 Marks]

Solution:

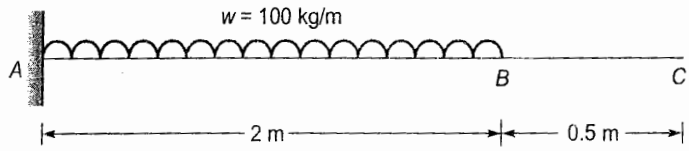


$E = 2.1 \times 10^6$ kg/cm$^2$

$I = 10000$ cm$^4$

Uniformly distributed load, $w$ = 100 kg/m = 1 kg/cm

Slope at end $C$ = Slope at $B$

$$= \frac{wl^3}{6EI} = \frac{1\times(200)^3}{6\times2.1\times10^6\times10000}$$

$= 6.35 \times 10^{-5}$ radians = 0.00364 degrees

Deflection at end $C$ = Deflection at $B$ + (Slope at $B$) ($BC$)

$$= \frac{wl^4}{8EI} + \frac{wl^3}{6EI}(50)$$

$$= \frac{6l}{8}\left(\frac{wl^3}{6EI}\right) + \frac{wl^3}{6EI}(50)$$

$$= \frac{6\times200}{8}\left(6.35\times10^{-5}\right) + \left(6.35\times10^{-5}\right)50$$

$= 1270 \times 10^{-5}$ cm $= 12.7 \times 10^{-5}$ m = 0.127 mm

So, $\theta_C$ = 0.00364° and $\Delta_C$ = 0.127 mm

4.2 Find the slope and deflection at the free end of a cantilever shown in figure. Moment of inertia of $AC$ is twice the moment of inertia of $BC$.

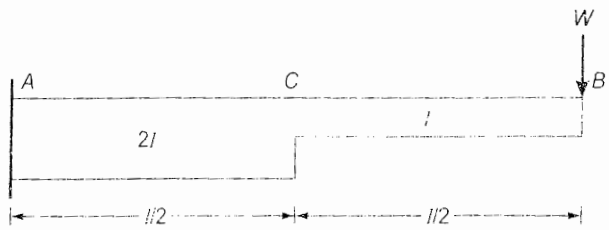


[SSC JE - 2007 : 15 Marks]

**Solution:**

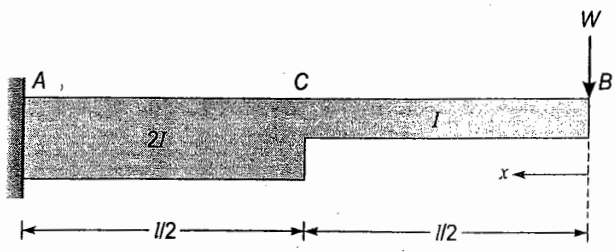


Let $x$ is measured from end $B$.

$$\because \quad EI\frac{d^2y}{dx^2} = -M$$

$$\Rightarrow \quad E\frac{d^2y}{dx^2} = -\frac{M}{I} = -\left[\frac{-Wx}{I}\,\middle|\,\frac{-Wx}{2I}\right] = \frac{Wx}{I}\,\middle|\,+\frac{Wx}{2I}$$

$$\therefore \quad E\frac{dy}{dx} = \frac{Wx^2}{2I}+C_1\,\middle|\,+\frac{Wx^2}{4I}$$

At $x = l$,
$$\frac{dy}{dx} = 0$$

$$\therefore \quad 0 = \frac{Wl^2}{2I}+C_1+\frac{Wl^2}{4I}$$

$$\Rightarrow \quad C_1 = -\frac{3Wl^2}{4I}$$

$$\therefore \quad E\frac{dy}{dx} = \frac{Wx^2}{2I}-\frac{3Wl^2}{4I}\,\middle|\,+\frac{Wx^2}{4I}$$

Integrating,
$$Ey = \frac{Wx^3}{6I}-\frac{3Wl^2}{4I}x+C_2\,\middle|\,+\frac{Wx^3}{12I}$$

At $x = l$, $y = 0$

$$\therefore \quad 0 = \frac{Wl^3}{6I}-\frac{3Wl^3}{4I}+C_2+\frac{Wl^3}{12I}$$

$$\Rightarrow \quad C_2 = \frac{Wl^3}{2I}$$

$$\therefore \quad Ey = \frac{Wx^3}{6I}-\frac{3Wl^2}{4I}x+\frac{Wl^3}{2I}\,\middle|\,+\frac{Wx^3}{12I}$$

For slope and deflection at free end $B$ of cantilever beam, $x = 0$

$$\therefore \quad \text{Slope at } B = \left.\frac{dy}{dx}\right|_{x=0} = \frac{-3Wl^2}{4EI} = \theta_B$$

$$\text{Deflection at } B = \left.y\right|_{x=0} = \frac{Wl^3}{2EI} = \Delta_B$$

4.3 Find the deflections at point $D$ and $C$ of the beam loaded as shown in figure.

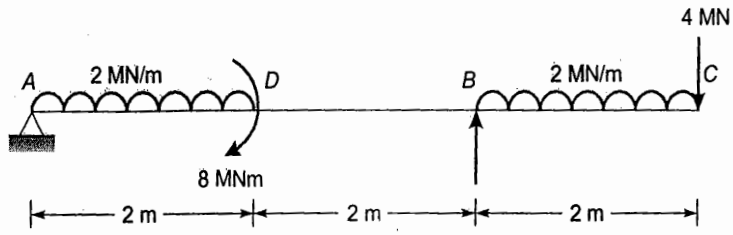


[SSC JE - 2008 : 15 Marks]

Solution:

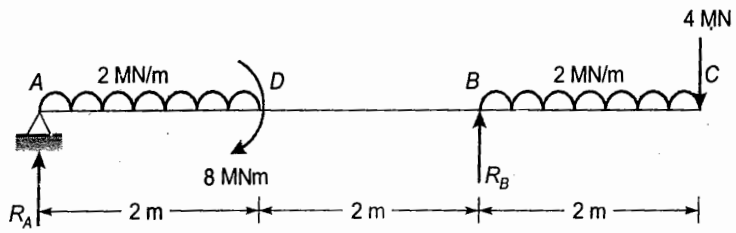


$\Sigma F_y = 0$

$$R_A + R_B = 2 \times 2 + 2 \times 2 + 4 = 12 \text{ MN}$$

$\Sigma M_A = 0$

$\Rightarrow \quad 2 \times 2 \times 1 + 8 + 2 \times 2 \times 5 + 4(6) = R_B(4)$

$\Rightarrow \quad R_B = 14 \text{ MN}$

$\therefore \quad R_A = 12 - R_B = -2$ MN i.e., acting downwards

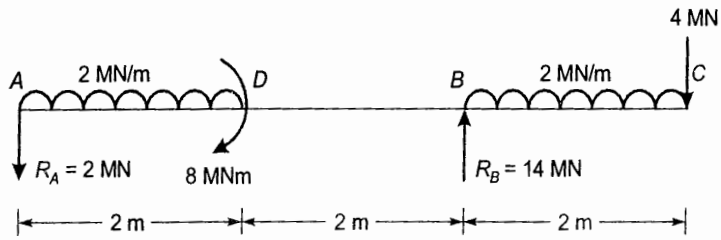


$$EI\frac{d^2y}{dx^2} = -\left[-R_A x - 2x\frac{x}{2}\Big| + 8\Big| + R_B(x-4) - 2(x-4)\frac{(x-4)}{2} - 4(6)\right]$$

$$= -\left[-2x - x^2\Big| + 8\Big| + 14(x-4) - (x-4) - -24\right]$$

$$= -\left[-2x - x^2\Big| + 8\Big| + 14(x-4) - \left(x^2 + 16 - 8x\right) - 24\right]$$

$$\therefore \quad EI\frac{dy}{dx} = -\left[-x^2 - \frac{x^3}{3} + C_1\Big| + 8x\Big| + \frac{14x^2}{2} - 56x - \frac{x^3}{3} - 16x + \frac{8x^2}{2} - 24x\right]$$

On integrating again

$$EIy = -\left[-\frac{x^3}{3} - \frac{x^4}{12} + C_1x + C_2\Big| + 4x^2\Big| + \frac{7}{3}(x-4)^3 - \frac{(x-4)^4}{12} - 12x^2\right]$$

At $x = 0$, $y = 0$ $\qquad C_2 = 0$

$\therefore$ $$0 = -\left[-\frac{x^3}{3}-\frac{x^4}{12}+C_1x+4x^2\right]$$

$\Rightarrow$ $$0 = \left[-\frac{64}{3}-\frac{256}{12}+4C_1+64\right]$$

$\Rightarrow$ $$C_1 = -\frac{32}{6}$$

For deflection at $D$, $x = 2\text{ m}$

$\therefore$ $$y_D = -\frac{1}{EI}\left[-\frac{x^3}{3}-\frac{x^4}{12}-\frac{32}{6}x+0\right]$$

$$= \frac{1}{EI}\left[\frac{8}{3}+\frac{16}{12}+\frac{32}{3}\right]=\frac{44}{3EI}$$

For deflection at $C$, $x = 6\text{ m}$

$\therefore$ $$y_C = -\frac{1}{EI}\left[-\frac{x^3}{3}-\frac{x^4}{12}-\frac{32}{6}x+0+4x^2+\frac{7}{3}(x-4)^3-\left(\frac{x^4}{12}-8x^2\right)-12x^2\right]$$

$$= -\frac{1}{EI}\left[-72-108-32+144+\frac{56}{3}+180-432\right]$$

$$= -\frac{1}{EI}\left[-320+\frac{56}{3}\right]$$

$$= \frac{904}{3EI}$$

4.4 A cantilever of length '$l$' and depth '$d$' tapers in plan in such a way that the breadth '$b$' at the fixed end, decreases to zero at the free end. Determine the deflection at the free end due to load '$W$' acting at the free end (shown in figure).

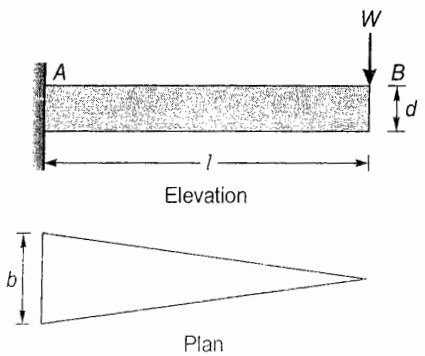


[SSC JE - 2009 : 12 Marks]

Solution:

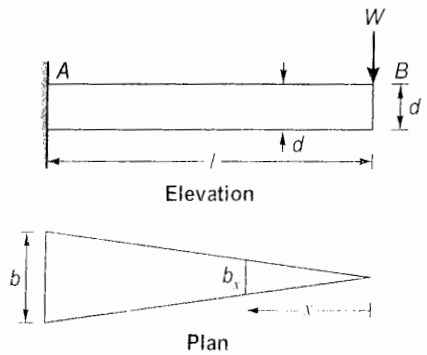

Let $b_x$ = width of beam at a distance '$x$' from free end $B$.

$$= \frac{b}{L}x$$

$\therefore$ $I_x$ = Moment of inertia of beam section distant '$x$' from free end $B$

$$= \frac{b_x d^3}{12}$$

$$= \frac{bd^3}{12l}x$$

$$\therefore \quad EI\frac{d^2y}{dx^2} = -M$$

$$\Rightarrow \quad E\frac{d^2y}{dx^2} = -\frac{M}{I}$$

$$\Rightarrow \quad E\frac{d^2y}{dx^2} = -\frac{12l}{bd^3x}(-Wx)$$

$$\Rightarrow \quad E\frac{d^2y}{dx^2} = \frac{12Wl}{bd^3}$$

Integrating, $$E\frac{dy}{dx} = \frac{12Wl}{bd^3}x + C_1$$

At $x = l$, $$\frac{dy}{dx} = 0$$

$$\therefore \quad 0 = \frac{12Wl^2}{bd^3} + C_1$$

$$\Rightarrow \quad C_1 = -\frac{12Wl^2}{bd^3}$$

$$\therefore \quad E\frac{dy}{dx} = \frac{12Wl}{bd^3}x - \frac{12Wl^2}{bd^3} = \frac{12Wl}{bd^3}(x-l)$$

Integrating $$Ey = \frac{12Wlx^2}{2bd^3} - \frac{12Wl^2}{bd^3}x + C_2$$

At $x = l$, $$y = 0$$

$$\therefore \quad 0 = \frac{6Wl^3}{bd^3} - \frac{12Wl^3}{bd^3} + C_2$$

$$\Rightarrow \quad C_2 = \frac{12Wl^3}{bd^3} - \frac{6Wl^3}{bd^3} = \frac{6Wl^3}{bd^3}$$

$$\therefore \quad Ey = \frac{12Wlx^2}{2bd^3} - \frac{12Wl^2x}{bd^3} + \frac{6Wl^3}{bd^3}$$

For deflection at free end, $$x = 0$$

$$\therefore \quad Ey_B = \frac{6Wl^3}{bd^3}$$

$$\Rightarrow \quad y_B = \frac{6Wl^3}{Ebd^3}$$

4.5 For the beam shown in figure, find deflection at the free end and middle of span.

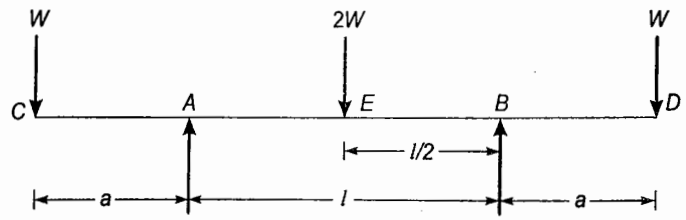


[SSC JE - 2010 : 15 Marks]

Solution:

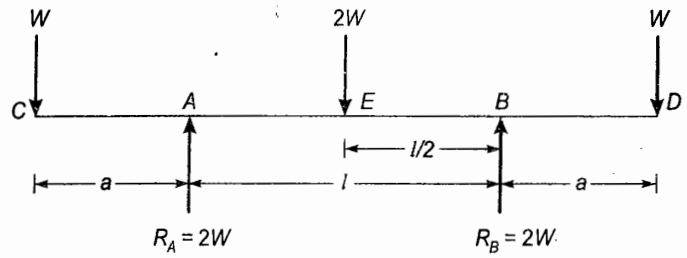


$\because$ Beam and loading is symmetrical about mid-span.

$$\therefore \quad R_A = R_B = \frac{4W}{2} = 2W$$

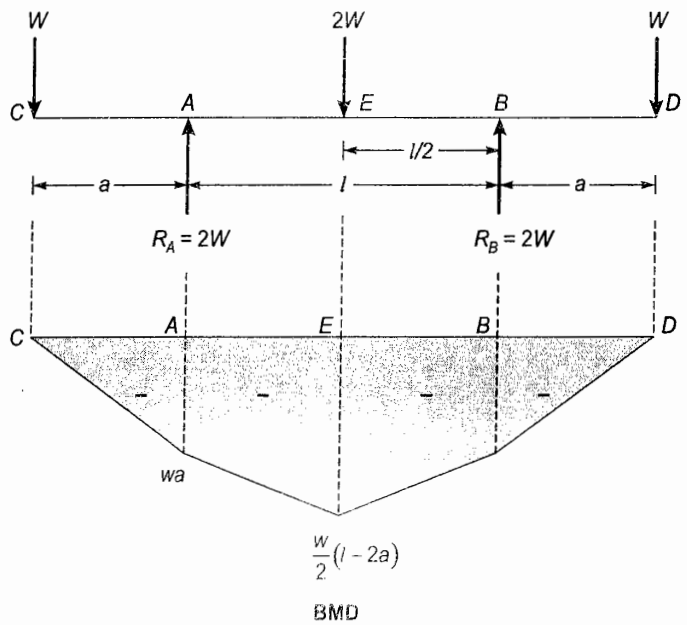


$$EI\frac{d^2y}{dx^2} = -\left[\underbrace{Wx}_{CA}\Big|\underbrace{+2W(x-a)}_{AE}\right]$$

(Considering one half of beam due to symmetry)

$$\therefore \quad EI\frac{dy}{dx} = \frac{Wx^2}{2} + C_1\Big| - \frac{2W}{2}(x-a)^2$$

$$EIy = \frac{Wx^3}{6} + C_1x + C_2\Big| - \frac{W}{3}(x-a)^3$$

At $x = a$, $y = 0$

$$\therefore \quad 0 = \frac{Wa^3}{6} + C_1 a + C_2$$

$$\Rightarrow \quad C_1 a + C_2 = -\frac{Wa^3}{6} \quad \text{...(i)}$$

Again at $x = a + \frac{l}{2}, \frac{dy}{dx} = 0$

At $x = 0$ $a + \frac{l}{2}$, $y = 0$

$$\therefore \quad 0 = \frac{W}{2}\left(a + \frac{l}{2}\right)^2 + C_1 - W\left(\frac{l}{2}\right)^2$$

$$\Rightarrow \quad C_1 = \frac{Wl^2}{4} - \frac{W(2a+l)^2}{8} = \frac{W}{8}\left(l^2 - 4a^2 - 4al\right)$$

Substituting $C_1$ in (i)

$$C_2 = -\frac{Wa^3}{6} - \frac{Wa}{8}\left(l^2 - 4a^2 - 4al\right)$$

$$= \frac{W}{24}\left(8a^3 - 3al^2 + 12a^2 l\right)$$

$\therefore$ For deflection at free end, $x = 0$

$$\therefore \quad y_C = y_D = \frac{C_2}{EI} = \frac{W}{24EI}\left(8a^3 - 3al^2 + 12a^2 l\right)$$

For deflection at mid-span, $x = (a + l/2)$

$$\therefore \quad y_E = \frac{1}{EI}\left[\frac{w}{6}\left(a + \frac{l}{2}\right)^3 + \frac{W}{8}\left(l^2 - 4a^2 - 4al\right)\left(a + \frac{l}{2}\right) + \frac{W}{24}\left(8a^3 - 3al^2 + 12a^2 l\right) - \frac{W}{3}\left(\frac{l^3}{8}\right)\right]$$

$$= \frac{W}{24EI}\left[4\left(a + \frac{l}{2}\right)^3 + 3\left(l^2 - 4a^2 - 4al\right)\left(a + \frac{l}{2}\right) + \left(8a^3 - 3al^2 + 12a^2 l\right) - l^3\right]$$

$$= \frac{W}{24EI}\left[4al^2 - 8a^3 - 8a^2 l + 2l^3 - 4a^2 l - 4al^2 + 8a^3 - 3al^2 + 12a^2 l - l^3\right]$$

$$= \frac{W}{24EI}\left[l^3 - 3al^2\right]$$

$$= \frac{Wl^2}{24EI}(l - 3a)$$

## 5. Theory of Columns and Shear Centre

5.1 A steel rod 5 m long and of 3 cm diameter is used as a column, with both ends fixed. Determine the crippling load by writing the differential equation. Take $E = 2 \times 10^6$ kg/cm$^2$.

[SSC JE - 2005 : 15 Marks]

Solution:

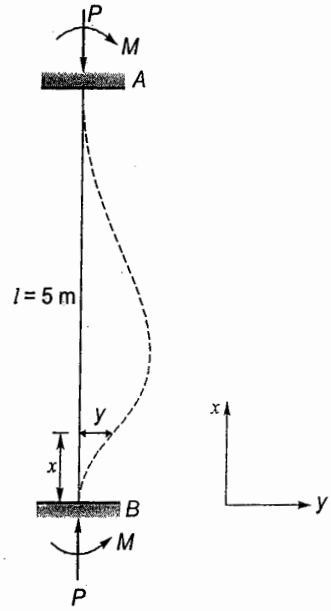


Diameter of rod, $d = 3$ cm

$\because$ Both ends are fixed.

$\therefore$ At supports, an opposite moment ($M$) will act.

$$EI\frac{d^2y}{dx^2} = M - P.y$$

$$\Rightarrow \quad \frac{d^2y}{dx^2} + \frac{P}{EI}y = \frac{M}{EI}$$

(Differential equation for column with both ends fixed.)

Crippling load, $$P_{cr} = \frac{4\pi^2 EI}{l^2}$$

$$= \frac{4\pi^2\left(2\times10^6 \text{ kg/cm}^2\right)\frac{\pi}{64}(3)^4 \text{ cm}^4}{(500)^2 \text{ cm}^2}$$

$$= 1255.75 \text{ kg}$$

5.2 **A solid steel column and a hollow steel column, both have the same length and same cross-section area, and are fixed at the ends. If the internal diameter of hollow column is 2/3 of its external diameter, find the ratio of buckling strengths of solid steel column to that of hollow steel column.**

[SSC JE - 2008 : 15 Marks]

Solution:

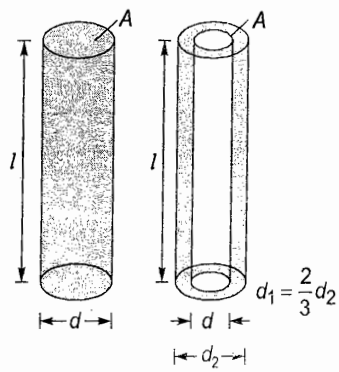


Solid column Hollow column

Let, $P_S$ = Buckling strength of solid column

$P_H$ = Buckling strength of hollow column

$\because$ Both ends of both the columns are fixed.

$\therefore$ Effective length of solid column

= Effective length of hollow column

$$= \frac{l}{2}$$

$$\therefore \quad \frac{P_S}{P_H} = \frac{\dfrac{\pi^2 EI_S}{l_{eff.}^2}}{\dfrac{\pi^2 EI_H}{l_{eff.}^3}} = \frac{\dfrac{\pi^2 EI_S}{(l/2)^2}}{\dfrac{\pi^2 EI_H}{(l/2)^2}} = \frac{I_S}{I_H} = \frac{\dfrac{\pi}{64}d^4}{\dfrac{\pi}{64}\left(d_2^4 - d_1^4\right)}$$

$$= \frac{d^4}{d_2^4 - d_1^4} = \frac{d^4}{d_2^4 - \left(\frac{2}{3}d_2\right)^4} = \frac{81}{65}\left(\frac{d}{d_2}\right)^4$$

Now Area of solid column = Area of hollow column

$$\Rightarrow \quad \frac{\pi}{4}d^2 = \frac{\pi}{4}\left(d_2^2 - d_1^2\right)$$

$$\Rightarrow \quad d^2 = d_2^2 - d_1^2 = d_2^2 - \left(\frac{2}{3}d_2\right)^2 = \frac{5}{9}d_2^2$$

$$\Rightarrow \quad \left(\frac{d}{d_2}\right)^2 = \frac{5}{9}$$

$$\therefore \quad \frac{P_S}{P_H} = \frac{81}{65}\left(\frac{d}{d_2}\right)^4 = \frac{81}{65}\left(\frac{5}{9}\right)^2 = \frac{25}{65} = \frac{5}{13}$$

$$\Rightarrow \quad P_H = \frac{13}{5}P_S = 2.6P_S$$

$\therefore$ Hollow column is 160% more stronger than solid column.

## 6. Miscellaneous

6.1 A square hole is punched out of a circular laminate, as shown in figure. Find the moment of inertia about *Y-Y* through C.G.,

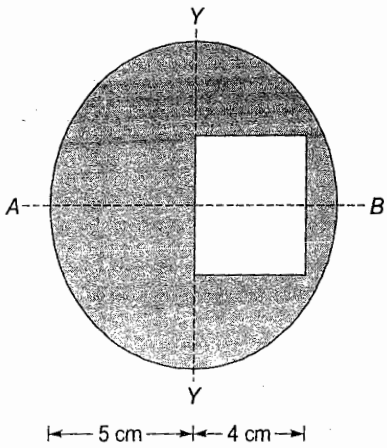


[SSC JE - 2005 : 15 Marks]

Solution:

Let $D$ = Diameter of disc = 10 cm

Moment of inertia about *y-y* is,

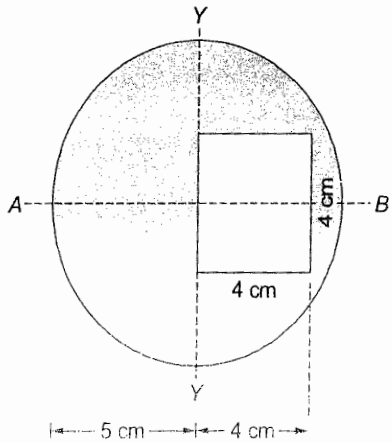


$$I = \frac{\pi}{64}D^4 - \left[\frac{4\times 4^3}{12} + (4\times 4)2^2\right]$$

$$= \frac{\pi}{64}(10)^4 - \left[\frac{64}{3} + 64\right]$$

$$= \frac{\pi}{64}(10)^4 - 64\left(\frac{4}{3}\right)$$

$$= 490.87 - 85.33 = 405.54 \text{ cm}^4$$

6.2 Find the moment of inertia of the triangular section shown in figure.

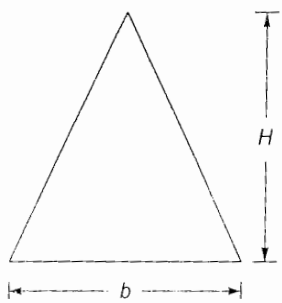


[SSC JE - 2010 : 10 Marks]

Solution:

Consider an element of width $b_x$ and thickness '$dx$' at a distance '$x$' from apex $A$.

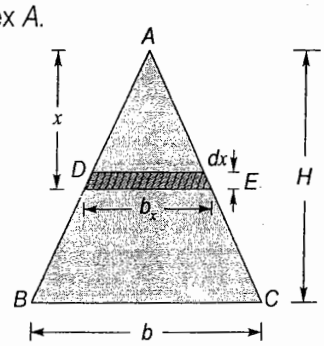


Now, $\Delta ADE \sim \Delta ABC$

$$\therefore \quad \frac{x}{H} = \frac{b_x}{b}$$

$$\Rightarrow \quad b_x = \frac{b}{H}x$$

$\therefore$ Moment of inertia of element about base $BC$ is,

$$dI = (b_x\, dx)\,(H-x)^2$$

$\therefore$ Moment of inertia of whole section is,

$$I = \int dI = \int_0^H b_x dx (H-x)^2 = \int_0^H \frac{bx}{H}(H-x)^2\, dx$$

$$= \frac{b}{H}\int_0^H \left(H^2x + x^3 - 2Hx^2\right)dx = \frac{b}{H}\left(\frac{H^2}{2}\left(H^2\right) + \frac{H^4}{4} - \frac{2}{3}H^4\right)$$

$$= \frac{b}{H}\left[\frac{H^4}{2} + \frac{H^4}{4} - \frac{2H^4}{3}\right] = \frac{b}{H}\left[\frac{6+3-8}{12}\right]H^4 = \frac{bH^3}{12}$$

$\therefore$ Moment of inertia of triangular section about base $BC = \dfrac{bH^3}{12}$

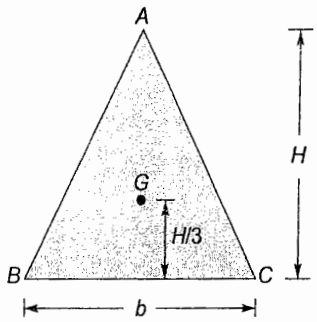


Moment of inertia about centroid ($G$) is given by parallel axis theorem, as

$$I_{BC} = I_G + A\left(\frac{H}{3}\right)^2$$

$$\Rightarrow \quad \frac{bH^3}{12} = I_G + \frac{bH}{2}\left(\frac{H^2}{9}\right)$$

$$\Rightarrow \quad I_G = \frac{bH^3}{12} - \frac{bH^3}{18} = \frac{bH^3}{36}$$

$\therefore$ Moment of inertia of section about centroid $= \dfrac{bH^3}{36}$.

6.3 Determine the forces in the members of the truss shown in the figure below:

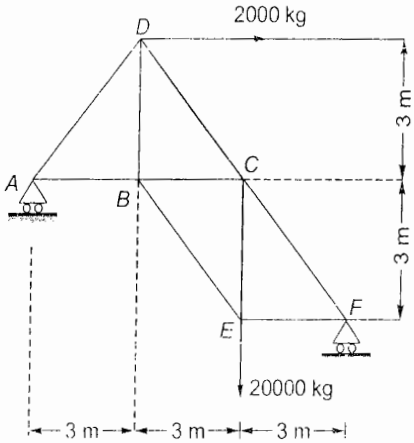


[SSC JE - 2011 : 15 Marks]

**Solution:**

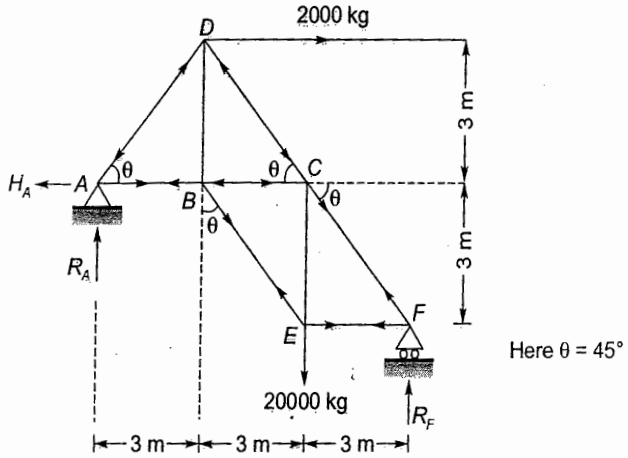


In question, both the supports *A* and *F* are on rollers and as such frame is unstable and will move towards right due to horizontal 2000 kg force. Thus support *A* is assumed to be pinned.

$$\Sigma F_x = 0$$

$$\Rightarrow \quad H_A = 2000 \text{ kg } (\leftarrow)$$

$$\Sigma F_y = 0$$

$$\Rightarrow \quad R_A + R_F = 20000 \text{ kg}$$

$$\Sigma M_A = 0$$

$$\Rightarrow \quad R_F(9) = 20000\,(6) + 2000\,(3)$$

$$\Rightarrow \quad R_F = 14000 \text{ kg } (\uparrow)$$

$$\therefore \quad R_A = 20000 - R_F = 20000 - 14000 = 6000 \text{ kg } (\uparrow)$$

**Joint *A***

$$\Sigma F_y = 0$$

$$\Rightarrow \quad R_A = F_{AD} \sin\theta$$

$$\Rightarrow \quad 6000 = F_{AD}\left(\frac{3}{3\sqrt{2}}\right)$$

$$\Sigma F_x = 0$$

$$\Rightarrow \quad F_{AD}\cos\theta + H_A = F_{AB}$$

$$\Rightarrow \quad F_{AB} = 6000\sqrt{2}\left(\frac{3}{3\sqrt{2}}\right) + 2000$$

$$\Rightarrow \quad F_{AB} = 8000 \text{ kg (Tensile)}$$

**Joint *D***

$$\Sigma F_x = 0$$

$$\Rightarrow \quad F_{AD}\cos\theta + 2000 = F_{DC}\cos\theta$$

$$\Rightarrow \quad 6000\sqrt{2}\left(\frac{1}{\sqrt{2}}\right) + 2000 = F_{DC}\left(\frac{1}{\sqrt{2}}\right)$$

$$\Rightarrow \quad F_{DC} = 8000\sqrt{2} \text{ kg (Comp.)}$$

$$\Sigma F_y = 0$$

$$\Rightarrow \quad F_{AD}\sin\theta + F_{DC}\sin\theta = F_{DB}$$

$$\Rightarrow \quad 6000\sqrt{2}\left(\frac{1}{\sqrt{2}}\right)+8000\sqrt{2}\left(\frac{1}{\sqrt{2}}\right)=F_{DB}$$

$$\Rightarrow \quad F_{DB} = 14000 \text{ kg (Tensile)}$$

Joint *B*

$$\Sigma F_y = 0$$

$$\Rightarrow \quad F_{DB} = F_{BE}\cos\theta$$

$$\Rightarrow \quad 14000 = F_{BE}\left(\frac{1}{\sqrt{2}}\right)$$

$$\Rightarrow \quad F_{BE} = 14000\sqrt{2} \text{ kg (Tensile)}$$

$$\Sigma F_x = 0$$

$$\Rightarrow \quad F_{BA}+F_{BC} = F_{BE}\sin\theta$$

$$\Rightarrow \quad 8000+F_{BC} = 14000\sqrt{2}\left(\frac{1}{\sqrt{2}}\right)$$

$$\Rightarrow \quad F_{BC} = 6000 \text{ kg (Comp.)}$$

Joint *C*

$$\Sigma F_x = 0$$

$$\Rightarrow \quad F_{BC}+F_{DC}\cos\theta = F_{CF}\cos\theta$$

$$\Rightarrow \quad 6000+8000\sqrt{2}\left(\frac{1}{\sqrt{2}}\right) = F_{CF}\left(\frac{1}{\sqrt{2}}\right)$$

$$\Rightarrow \quad F_{CF} = 14000\sqrt{2} \text{ kg (Comp.)}$$

$$\Sigma F_y = 0$$

$$\Rightarrow \quad F_{CF}\sin\theta = F_{CD}\sin\theta+F_{CE}$$

$$\Rightarrow \quad 14000\sqrt{2}\left(\frac{1}{\sqrt{2}}\right) = 8000\sqrt{2}\left(\frac{1}{\sqrt{2}}\right)+F_{CE}$$

$$\Rightarrow \quad F_{CE} = 6000 \text{ kg (Tensile)}$$

Joint *E*

$$\Sigma F_y = 0$$

$$\Rightarrow \quad F_{BE}\cos\theta+F_{CE} = 20000$$

$$\Rightarrow \quad 14000\sqrt{2}\left(\frac{1}{\sqrt{2}}\right)+6000 = 20000$$

$$\Rightarrow \quad 20000 = 20000$$

As a check, this fonfirms that forces in members *BE* and *EC* are correct.

$$\Sigma F_x = 0$$

$$\Rightarrow \quad F_{BE}\cos\theta = F_{EF}$$

$$\Rightarrow \quad 14000\sqrt{2}\left(\frac{1}{\sqrt{2}}\right) = F_{EF}$$

$$\Rightarrow \quad F_{EF} = 14000 \text{ kg (Tensile)}$$

Joint $F$

$$\Sigma F_x = 0$$

$$\Rightarrow \quad F_{CF}\cos\theta - F_{EF} = 0$$

$$\Rightarrow \quad 14000\sqrt{2}\left(\frac{1}{\sqrt{2}}\right) - 14000 = 0$$

$$\Rightarrow \quad 0 = 0$$ This confirms that results are true.

$$\Sigma F_y = 0$$

$$\Rightarrow \quad F_{CF}\sin\theta = R_F$$

$$\Rightarrow \quad 14000\sqrt{2}\left(\frac{1}{\sqrt{2}}\right) = 14000$$

$$\Rightarrow \quad 14000 = 14000$$ Thus results are correct.

| Member | Length (m) | Force (kg) | Nature of Force |
|---|---|---|---|
| AB | 3 | 8000 | $T$ |
| BC | 3 | 6000 | $C$ |
| AD | $3\sqrt{2}$ | $6000\sqrt{2}$ | $C$ |
| BD | 3 | 14000 | $T$ |
| DC | $3\sqrt{2}$ | $8000\sqrt{2}$ | $C$ |
| BE | $3\sqrt{2}$ | $14000\sqrt{2}$ | $T$ |
| CE | 3 | 6000 | $T$ |
| EF | 3 | 14000 | $T$ |
| CF | $3\sqrt{2}$ | $14000\sqrt{2}$ | $C$ |

6.4 The cross-section of a joist is a T-section, 120 mm × 200 mm × 12 mm, with 120 mm side horizontal. Sketch the shear stress distribution and hence find the maximum shear stress if it has to resist a shear force of 200 kN.

[SSC JE - 2012 : 15 Marks]

Solution:

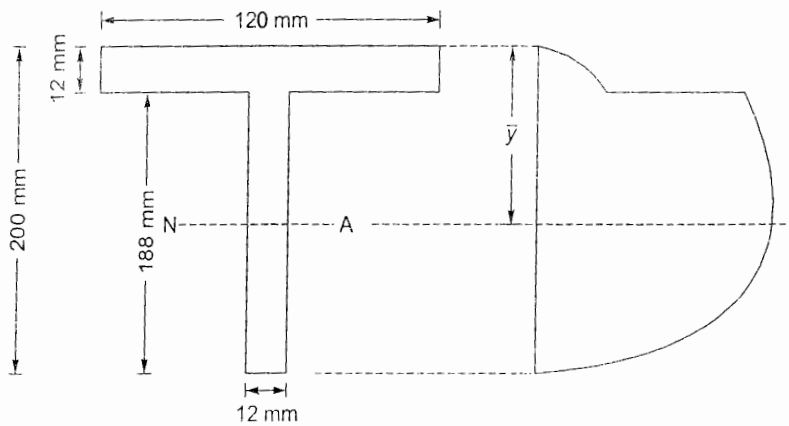


Shear stress distribution

Shear force, $F = 200$ kN

Let $\bar{y}$ = Distance of neutral axis (NA) from top of T-beam

$$= \frac{120\times12\times6+188\times12\times106}{120\times12+188\times12} = \frac{247776}{3696} = 67.04 \text{ mm}$$

$$I_{xx} = I_{NA} = \left[120\times\frac{12^3}{12}+120\times12\times(67.04-6)^2\right]+\left[12\times\frac{188^3}{12}+12\times188(106-67.04)^2\right]$$

$$= 15.45\times10^6 \text{ mm}^4$$

Maximum shear stress will occur at N.A

$$\therefore \quad q_{max} = \frac{F}{Ib}(A\bar{y})$$

$$= \frac{200\times10^3}{15.45\times10^6\times12}\left[120\times12\times(67.04-6)+12(67.04-12)\left(\frac{67.04-12}{2}\right)\right]$$

$$= 1.0787\times10^{-3}[87897.6+18176.41] = 114.42 \text{ N/mm}^2$$

**6.5** For the $I$-section shown in figure determine the position of centroid and moment of inertia about the base flange ($I_{KL}$).

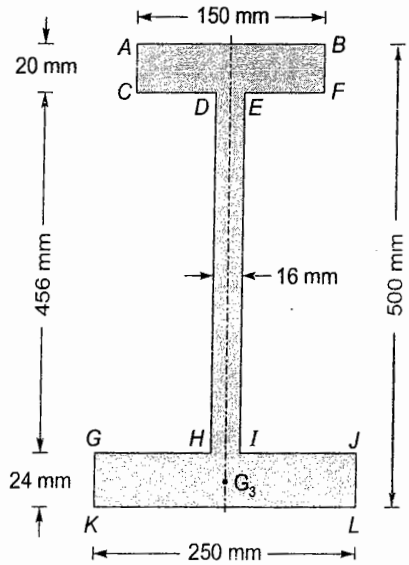


[SSC JE - 2012 : 10 + 10 = 20 Marks]

Solution:

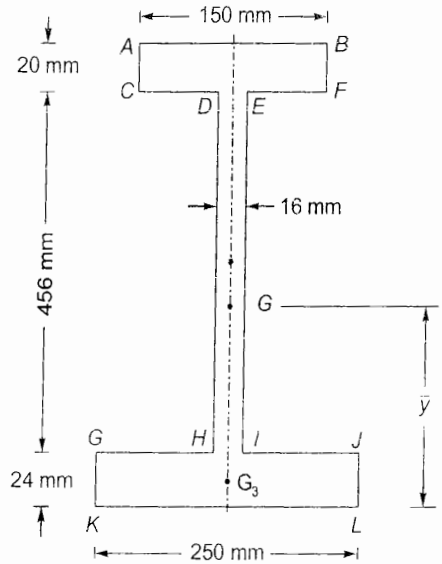

Let '$G$' be the centroid of the section distant '$\bar{y}$' from base $KL$.

$$\therefore \quad \bar{y} = \frac{(250\times24\times12)+(456\times16\times252)+(150\times20\times490)}{250\times24+456\times16+150\times20}$$

$$= \frac{3380592}{16296} = 207.45 \text{ mm}$$

Moment of inertia of the section about $KL$ ($I_{kL}$)

$$= \left[250\times\frac{24^3}{12}+250\times24\times12^2\right]+\left[16\times\frac{456^3}{12}+16\times456\times252^2\right]+\left[150\times\frac{20^3}{12}+150\times20\times490^2\right]$$

$$= 1152000 + 589750272 + 720400000$$

$$= 1311302272 \text{ mm}^4$$

$$= 13.113\times10^8 \text{ mm}^4$$

6.6 Analyze the portal frame shown in the figure. Also sketch the deflected shape of the frame. The end $A$ is fixed and the end $D$ is hinged. Also, the value of $EI$ is constant throughout.

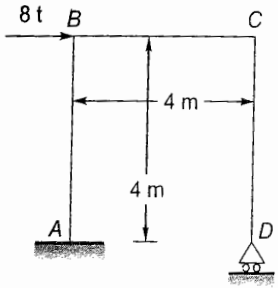


[SSC JE - 2013 : 30 Marks]

Solution:

Fixed end moments:

$$M_{FAB} = M_{FBA} = M_{FBC} = M_{FCB} = M_{FCD} = M_{FDC} = 0$$

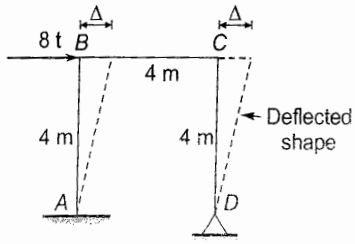


Slope deflection equations:

$$M_{AB} = 0+\frac{2EI}{4}\left(0+\theta_B-\frac{3\Delta}{4}\right) \quad (\because \theta_A = 0)$$

$$= 0.5EI\theta_B - 0.375\Delta EI$$

$$M_{AB} = 0+\frac{2EI}{4}\left(2\theta_B+0-\frac{3\Delta}{4}\right)$$

$$= EI\theta_B - 0.375\Delta EI$$

$$M_{BC} = 0+\frac{2EI}{4}(0+0-0) = 0$$

$$M_{CB} = 0+\frac{2EI}{4}(0+0-0) = 0$$

$$M_{CD} = 0+\frac{2EI}{4}\left(2\theta_C+\theta_D-\frac{3\Delta}{4}\right)$$

$$= EI\theta_C + 0.5EI\theta_D - 0.375EI\Delta$$

$$M_{DC} = 0 + \frac{2EI}{4}\left(2\theta_D + \theta_C - \frac{3\Delta}{4}\right)$$

$$= EI\theta_D + 0.5EI\theta_C - 0.375EI\Delta$$

Equilibrium equation:

$$\Sigma M_B = 0$$

$$\Rightarrow \quad M_{BA} + M_{BC} = 0$$

$$\Rightarrow \quad EI\theta_B - 0.375\,EI\Delta = 0 \qquad \text{...(i)}$$

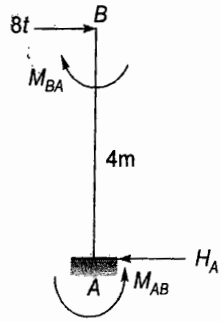


$$\Sigma M_C = 0$$

$$\Rightarrow \quad M_{CB} + M_{CD} = 0$$

$$\Rightarrow \quad EI\theta_C + 0.5\,EI\theta_D - 0.375\,EI\Delta = 0 \qquad \text{...(ii)}$$

$$\Sigma M_D = 0$$

$$\Rightarrow \quad M_{DC} = 0$$

$$\Rightarrow \quad 0.5\,EI\theta_C + EI\theta_D - 0.375\,EI\Delta = 0 \qquad \text{...(iii)}$$

$$H_A = \frac{M_{AB} - M_{BA}}{4} = \frac{1.5EI\theta_B - 0.75EI\Delta}{4}$$

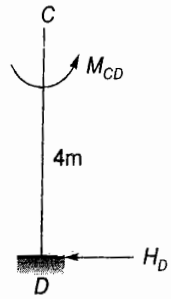


$$H_D = \frac{M_{CD}}{4} = \frac{EI\theta_C + 0.5EI\theta_D - 0.375EI\Delta}{4}$$

$$H_A + H_D = 8t$$

$$\Rightarrow \quad 1.5\,EI\theta_B - 0.75\,EI\Delta + EI\theta_C + 0.5\,EI\theta_D - 0.375\,EI\Delta = 32$$

$$\Rightarrow \quad 1.5\,EI\theta_B + EI\theta_C + 0.8\,EI\theta_D - 1.125\,EI\Delta = 0$$

Subtracting (ii) from (i)

$$EI\theta_B - EI\theta_C - 0.5\,EI\theta_D = 0$$

$$\Rightarrow \quad \theta_B - \theta_C - 0.5\,\theta_D = 0 \qquad \text{...(v)}$$

Subtracting (iii) from (ii),

$$0.5EI\theta_C - 0.8EI\theta_D = 0$$

$$\Rightarrow \quad \theta_C = \theta_D \qquad \text{...(vi)}$$

Subtracting 3-times of (iii) from (iv),

$$1.5\,E\theta_B - 0.5I\theta_C - 2.5I\theta_D = 32$$

$$\Rightarrow \quad 1.5\,\theta_B - 0.5\,\theta_C - 2.5\,\theta_D = \frac{32}{EI} \qquad \text{...(vii)}$$

Solving (v), (vi) and (vii),

$$\theta_B = \frac{64}{EI}$$

$$\theta_C = \frac{42.67}{EI}$$

$$\theta_D = \frac{42.67}{EI}$$

Substituting $\theta_B$ in eq. (i)

$$64 - 0.375\, EI\Delta = 0$$

$$\Rightarrow \quad EI\Delta = \frac{64}{0.375} = 170.67$$

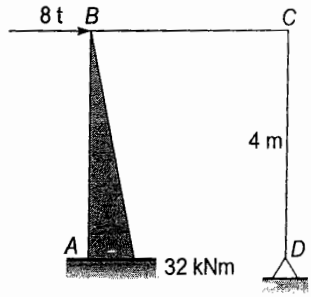


$$\therefore \quad M_{AB} = 0.5\,(64) - 0.375\,(170.67) = -32 \text{ kNm}$$

$$M_{BA} = 64 - 64 = 0$$

$$M_{BC} = M_{CB} = 0$$

$$M_{CD} = 42.67 + 0.5\,(42.67) - 64 = 0$$

$$M_{DC} = 42.67 + 0.5\,(42.67) - 64 = 0$$

■■■■

# Unit X RCC Design

## 1. Shear, Torsion, Bond, Anchorage and Development Length

1.1 A rectangular RCC beam with $b$ = 300 mm and $d$ = 550 mm, has a service shear force of 100 kN at a section near the support. Four bars of 20 mm dia. (= 1257 mm$^2$) are provided as tensile reinforcement at the section, which are continued to the support. For M20 concrete and Fe415 grade bars, design vertical stirrups for the section.

[SSC JE - 2005 : 15 Marks]

**Solution:**

Width of beam, $b$ = 300 mm

Effective depth of beam, $d$ = 550 mm

Service shear force = 100 kN

∴ Factored shear force, $V = 1.5 \times 100 = 150$ kN

Area of steel reinforcement, $A_{st} = 4 \times \frac{\pi}{4} \times 20^2 = 1256.64 \text{ mm}^2 = 1257 \text{ mm}^2$ (given)

M20 concrete and Fe415 steel are used.

Nominal shear stress, $\tau_v = \frac{V}{bd} = \frac{150 \times 1000}{300 \times 550} = 0.91 \text{ N/mm}^2$

Percentage of steel reinforcement provided,

$$p_t = \frac{A_{st}}{bd} \times 100 = \frac{1257}{300 \times 550} \times 100 = 0.762\%$$

Design shear strength of concrete for M20 grade and 0.762% steel reinforcement ($\tau_c$) = 0.5634 N/mm$^2$

Thus shear stirrups need to be designed to carry the shear force of

$$V_{us} = (\tau_v - \tau_c)\, bd = (0.91 - 0.5634)\, 300\, (550) = 57.2 \text{ kN}$$

Using 2 legged 8 mm dia. stirrups,

Area of stirrups, $A_{sv} = 2 \times \frac{\pi}{4} \times 8^2 = 100.53 \text{ mm}^2$

∴ Spacing of shear stirrups is given by,

$$V_{us} = 0.87 f_y A_{sv} \frac{d}{s_v}$$

$$\Rightarrow \quad s_v = \frac{0.87 f_y A_{sv} d}{V_{us}} = \frac{0.87(415)(100.53)(550)}{57.2 \times 1000} = 349 \text{ mm c/c} \quad \text{...(i)}$$

Also, from the requirement of minimum shear reinforcement,

$$\frac{A_{sv,min}}{bs_v} \geq \frac{0.4}{0.87 f_y}$$

$$\Rightarrow \qquad s_v \le \frac{2.175 f_y A_{sv\,min}}{b} = \frac{2.175(415)(100.53)}{300} = 302.5 \text{ mm c/c} \qquad ...(ii)$$

Also,
$$s_v \le \begin{bmatrix} 0.75d \\ 300 \text{ mm} \end{bmatrix} = \begin{bmatrix} 0.75(550) = 412.5 \text{ mm} \\ 300 \text{ mm} \end{bmatrix} = 300 \text{ mm} \qquad ...(iii)$$

From eqs. (i), (ii) and (iii)

$$s_v \le 300 \text{ mm}$$

Adopt $\qquad s_v = 250$ mm c/c

∴ Provide 2 legged 8 mm dia. stirrups @ 250 mm c/c.

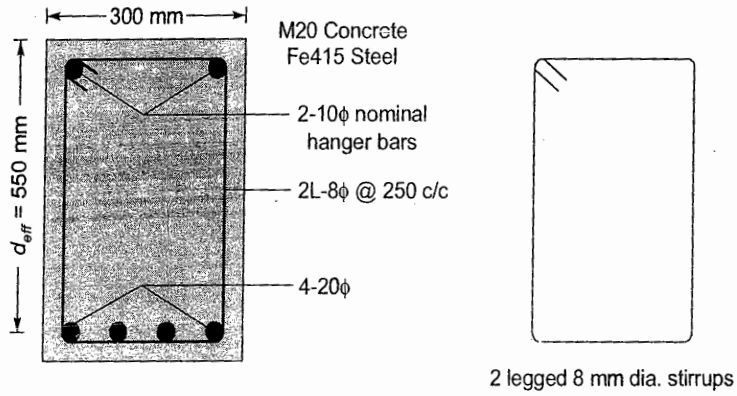


1.2 (i) What is bond? Explain flexural and anchorage bond?

[SSC JE - 2012 : 6 Marks]

(ii) What is development length? Write its significance in RCC design?

[SSC JE - 2012 : 4 + 5 = 9 Marks]

Solution:

(i) **Bond:** It is the adhesive force between the cement mortar and the reinforcing bars. It is due to the bond only that it is possible to transfer the axial force from steel bars to surrounding cement mortar. Bond gives strain compatibility.

**Flexural bond:** This bond comes into play in flexural members due to shear i.e., due to variation in bending moment which in turn causes variation in axial tension along the length of reinforcing bar. Flexural bond is most critical where shear is quite significant.

**Anchorage bond:** This bond arises over the length of reinforcing bar i.e., length of anchorage or at the end of reinforcing bar. This bond resists pulling out of reinforcing bar in tension or pushing in of the bar in compression.

(ii) **Development length:** It is that minimum length of the reinforcing bar beyond a section which resists the pulling out of bar in tension or pushing in of bar in compression. It is calculated as per the following:

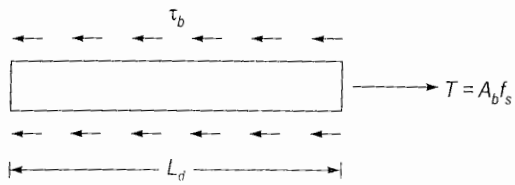


Let $\phi$ = bar diameter

$$A = \frac{\pi}{4}\phi^2$$

$L_d$ = development length

$\tau_b$ = bond stress

Resistance offered by $L_d$ distance of bar = Pull out or push in of bar in tension or compression respectively.

$$\tau_b \pi \phi L_d = A_b f_s$$

$$\Rightarrow \quad \tau_b \pi \phi L_d = \frac{\pi}{4}\phi^2 (0.87 f_y)$$

$$\Rightarrow \quad L_d = \frac{0.87 f_y}{4\tau_{bd}}\phi$$

**Significance of development length in RCC design:** In order to resist flexural tension by the reinforcing bar, the required minimum bond strength must get developed which depends on the length of bar available for bond formation. Thus reinforcing bar must be placed more than development length beyond the section to resist the axial tension/compression in the bar.

1.3 A simply supported 18 m effective span RCC rectangular beam of 500 mm × 1500 mm (overall depth) section is reinforced throughout with 21 nos. 25 mm diameter bars in three layers of 7 bars each at Clear cover of 37.5 mm on tensile face. The reinforcement on the compression face is 4-25 mm + 1-20 mm diameter bars in one layer at an effective cover of 50 mm. The clear cover between the different layers on tension face is 25 mm. M 25 grade concrete and Fe 415 grade steel bars are used in the beam throughout. The beam is laterally restrained throughout the span.

(a) What shall be the superimposed uniformly distributed load w, that the beam can carry at working conditions?

(b) Design the shear reinforcement at support if design shear strength of concrete $\tau$ is given as follows for different values of $p = 100\, A_s/bd$.

| $p$ | 1.25 | 1.5 | 1.75 |
|---|---|---|---|
| $\tau_c$(MPa) | 0.70 | 0.74 | 1.78 |

[SSC JE - 2013 : 15 + 15 = 30 Marks]

Solution:

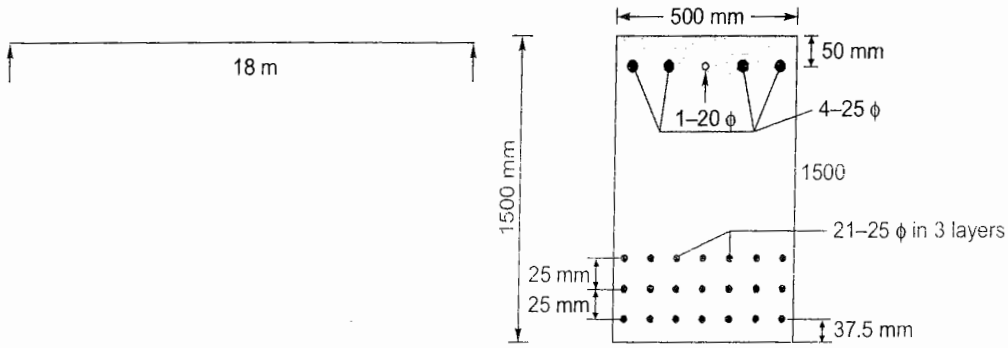


Area of tension steel, $A_{st} = 21 \times \frac{\pi}{4} \times 25^2 = 10308.35 \text{ mm}^2$

Percentage tension reinforcement,

$$p_t = \frac{A_{st}}{bd} \times 100$$

For computing effective depth ($d$), centroid of tension reinforcement has to be located which will lie at the centroid of middle layer of tension reinforcement bars.

$\therefore$ $$d = 1500 - 37.5 - 25\,(I \text{ layer bars}) - 25 - \frac{1}{2}(25)\ (\text{II layer bars}) = 1400\text{ mm}$$

Limiting percentage of tension reinforcement

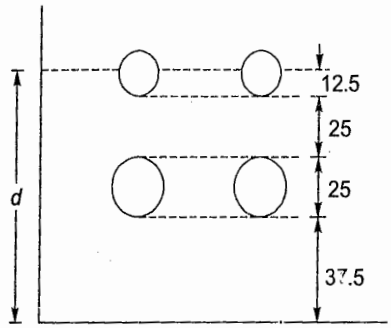


$$p_{t\,\text{lim}} = 41.61\frac{f_{ck}}{f_y}\cdot\frac{x_{u\text{lim}}}{d} = 41.61\times\frac{25}{415}\times 0.48 = 1.203\%$$

But $$p_t = \frac{A_{st}}{bd}\times 100 = \frac{10308.35}{500\times 1400}\times 100 = 1.473\%$$

Thus $p_t > p_{t\,\text{lim}}$ and section is reinforced in compression zone also so that over-reinforced section can be avoided and section has been designed as doubly reinforced section.

Effective cover in compression zone $(d') = 50$ mm

$$M_{u\,lim} = 0.138\, f_{ck}\, bd^2$$
$$= 0.138(25)\,500\,(1400)^2 = 3381\text{ kNm}$$

$\because$ $$p_{t\,\text{lim}} = 1.203\%$$

$\therefore$ $$A_{st\,min} = \frac{p_{t\,\text{lim}}}{100}bd = \frac{1.203}{100}\times 500\times 1400 = 8421\text{ mm}^2$$

$\therefore$ $$\Delta A_{st} = A_{st} - A_{st\,\text{lim}} = 10308.35 - 8421 = 1887.35\text{ mm}^2$$

But $$\Delta A_{st} = \frac{M - M_{u\,\text{lim}}}{0.87 f_y (d - d')}$$

$\Rightarrow$ $$1887.35 = \frac{M - 3381\times 10^6}{0.87(415)(1400 - 50)}$$

$\Rightarrow$ $$M = 4300.93\text{ kNm}$$

$\therefore$ Moment of resistance of beam section is 4300.93 kNm.

$$M = \frac{wl^2}{8}$$

$\Rightarrow$ $$4300.93 = \frac{w(18)^2}{8}$$

$\Rightarrow$ $$w = 106.2\text{ kN/m}$$

$\therefore$ $$\text{Working load} = \frac{106.2}{1.5} = 70.8\text{ kN/m}$$

$\therefore$ Self weight of beam $= 0.5 \times 1.5 \times 25 = 18.75$ kN/m

$\therefore$ Superimposed working load $= 70.8 - 18.75 = 52.05$ kN/m

$\therefore$ Beam can carry a super-imposed working load of 52.05 kN/m

For $$p_t = 1.473\%,\ \tau_c = 0.736\text{ N/mm}^2$$

Factored shear shear force, $V = \frac{wl}{2} = 106.2 \times \frac{18}{2} = 955.8$ kN

∴ Shear stress, $\tau_v = \frac{V}{bd} = \frac{955.8 \times 10^3}{500 \times 1400} = 1.365$ N/mm$^2$

∴ Shear reinforcement shall be designed for shear force of

$$V_{us} = (\tau_v - \tau_c)\, bd$$
$$= (1.365 - 0.736) \times 500 \times 1400 = 440.3 \text{ kN}$$

Now $V_{us} = 0.87 f_y A_{sv} \frac{d}{s_v}$

Using 8 ϕ – 4*L* stirrups, $A_{sv} = 4 \times \frac{\pi}{4} \times 8^2 = 201.06$ mm$^2$

∴ $440.3 \times 10^3 = 0.87(500)\, 201.06 \times \frac{1400}{s_v}$

⇒ $s_v = 278$ mm c/c = 280 mm (say)

∴ Provide 4*L*–8 ϕ stirrups @ 280 mm c/c at supports.

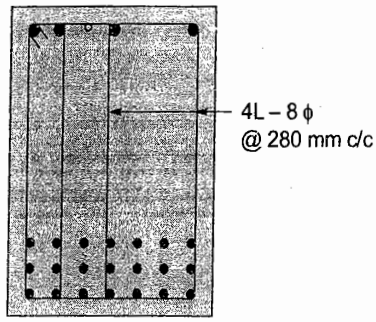


## 2. Footing, Columns, Beams and Slabs

**2.1 Design a rectangular beam section of width 300 mm, for a total service bending moment 200 kNm. Use M20 concrete and bars Fe415 grade. Assume the exposure as mild. Design for flexure only.**

**[SSC JE - 2005 : 12 Marks]**

**Solution:**

Width of the beam, $b = 300$ mm

Total service bending moment = 200 kNm

∴ Factored bending moment, $M = 1.5 \times 200 = 300$ kNm

Grade of concrete is M20 i.e., $f_{ck} = 20$ N/mm$^2$

Grade of steel is Fe415 i.e., $f_y = 415$ N/mm$^2$

RCC beam section is designed as balanced section.

Over-reinforced section is never designed.

Ultimate moment of resistance for Fe415 grade steel is,

$$M_{u\,lim} = 0.138\, f_{ck}\, bd^2$$

where $d$ = Effective depth of beam section

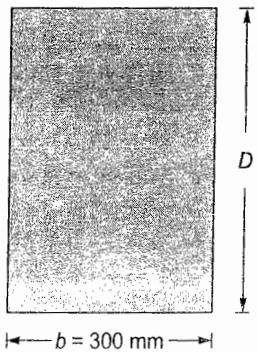


**Design of beam depth:**

The beam section is required to carry a factored bending moment of 300 kNm i.e., ultimate moment of resistance of beam section must be greater than or atleast equal to 300 kNm.

∴ $M_{u\,lim} \geq 300$ kNm

⇒ $0.138\, f_{ck}\, bd^2 \geq 300 \times 10^6$ Nmm

⇒ $0.138\,(20)\,(300)\, d^2 \geq 300 \times 10^6$

⇒ $d \geq 601.93$ mm

Given exposure condition is mild. For mild exposure condition, minimum clear cover required is 20 mm. Let 25 mm clear cover is provided.

Let 20 mm diameter bars are used and diameter of shear stirrups is 8 mm.

∴ Overall depth of beam required

$$D = d + \text{clear cover} + \text{dia. of stirrups} + \frac{1}{2}(\text{dia. of bar})$$

$$= 601.93 + 25 + 8 + \frac{1}{2}(20) = 644.93 \text{ mm}$$

Thus overall depth of beam ($D$) must be greater than 644.93 mm.

Let $D = 650$ mm is adopted.

∴ Effective depth of beam,

$$d = 650 - 25 - 8 - \frac{1}{2}(20) = 607 \text{ mm}$$

$> 601.93$ mm (= minimum effective depth required.) (OK)

Thus provide a beam section of 300 × 650 with 25 mm clear cover.

**Reinforcement required:**

The amount of reinforcement required can be computed directly using the relation,

$$\frac{p_t}{100} = \frac{A_{st}}{bd} = \frac{0.5 f_{ck}}{f_y}\left[1 - \sqrt{1 - 4.598\frac{R}{f_{ck}}}\right]$$

$$\text{where } R = \frac{M}{bd^2} = \frac{300 \times 10^6}{300 \times 607^2} = 2.714 \text{ N/mm}^2$$

$$= \frac{0.5(20)}{415}\left[1 - \sqrt{1 - 4.598 \times \frac{2.714}{20}}\right] = 9.31975 \times 10^{-3}$$

⇒ $p_t = 0.9319\%$ (= percentage of steel reinforcement required)

⇒ $$A_{st} = \frac{0.9319}{100}bd = \frac{0.9319}{100}(300)(607) = 1696.99 \text{ mm}^2$$

∵ 20 mm dia. bars were assumed above while computing effective depth.

∴ No. of 20 mm dia. bars required $= \dfrac{1696.99}{\frac{\pi}{4}(20)^2} = 5.4 \simeq 6$ nos. (say)

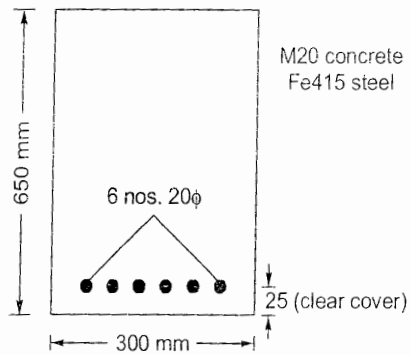


Reinforcement details

2.2 Design a suitable square footing for a column of size 350 × 350 mm². The column transfers a service load of 1000 kN. Use M20 concrete and Fe415 grade bars. Safe bearing capacity of soil is 200 kN/m². Check for flexure and two way shear only.

[SSC JE - 2005 : 18 Marks]

Solution:

Column size = 350 mm × 350 mm

Service load = 1000 kN

Safe bearing capacity of soil (SBC) = 200 kN/m$^2$

Let weight of column and footing = 10% of 1000 kN = 100 kN

∴ Total load coming on soil = 1000 + 100 = 1100 kN

∴ Footing area required ($A$) = $\frac{1100}{200} = 5.5$ m$^2$

∴ Size of square footing = $\sqrt{5.5} = 2.345$ m

Thus provide a square footing of 2.5 m × 2.5 m.

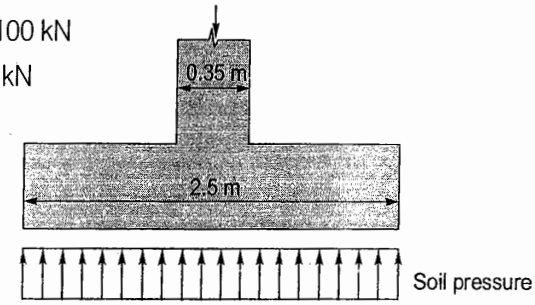


**Thickness of footing:**

Net design soil pressure at ultimate load = $\frac{1.5 \times 1000}{2.5 \times 2.5} = 240$ kN/m$^2$ = 0.24 N/mm$^2$

(a) One-way shear

The critical section for one-way shear will be at a distance '$d$' form the column face.

∴ Factored shear force ($V_{u1}$) = $0.24 \times 2500 \times \left[\frac{2500-350}{2} - d\right] = 600(1075-d)$N

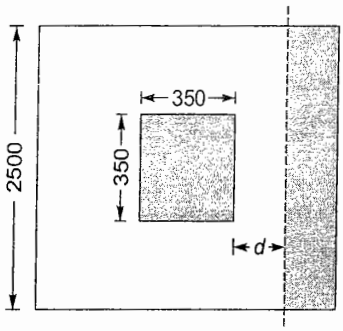


Let 0.3% tension reinforcement is provided in footing.

Thus for $p_t$ = 0.3% and M20 concrete, design shear strength of concrete ($\tau_c$) = 0.388 N/mm$^2$

∴ One way shear resistance of footing

$$V_{c1} = 0.388 \times 2500 \times d = 970\ d \text{ N}$$

∴ $V_{c1} \geq V_{v1}$

⇒ $970\ d \geq 600\,(1075 - d)$

⇒ $d \geq 410.83$ mm

(b) Two-way shear

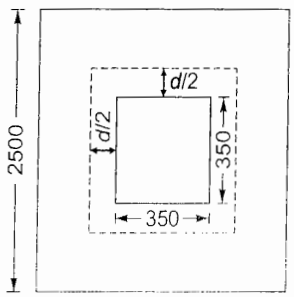


Critical section for two-way shear will be at a distance $\frac{d}{2}$ from the column face.

∴ Upward two-way shear force

$$V_{u2} = 0.24\,(350 + d)^2$$

Two-way shear resistance of concrete

$$V_{c2} = k\tau_c\, 4(350 + d)\, d \qquad \text{where } k = \frac{\text{Column width}}{\text{Column depth}} = 1$$

$$\therefore \quad V_{c2} = (1)(1.118)\,4\,(350 + d)\, d \quad [\tau_c = 0.25\sqrt{f_{ck}} = 0.25\sqrt{20} = 1.118 \text{ N/mm}^2]$$

$$\therefore \quad V_{c2} \geq V_{u2}$$

$$\Rightarrow \quad 1.118\,(4)\,(350 + d)\, d \geq 0.24\,(350 + d)^2$$

$$\Rightarrow \quad 1565.2\, d + 4.472\, d^2 \geq 29400 + 0.24\, d^2 + 168\, d$$

$$\Rightarrow 4.232 d^2 + 1397.2 d - 29400 \geq 0$$

$$\Rightarrow \quad d \geq 19.85 \text{ mm}$$

Thus one-way shear governs the depth of footing i.e., $d \leq 410.83$ mm

Using 75 mm clear cover and 20 mm dia. bars, overall depth of footing required

$$D = 410.83 + 75 + \frac{20}{2} = 495.8 \text{ mm}$$

Provide footing of depth, $D = 550$ mm

∴ Effective depth of footing,

$$d = 550 - 75 - \frac{20}{2} = 465 \text{ mm}$$

(c) **Flexural moment**

Critical section for moment will be at the face of column

∴ Moment at critical section

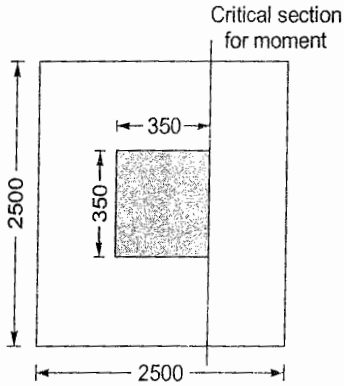


$$M = 0.24 \times 1000 \times \left(\frac{2500 - 350}{2}\right)^2 \times \frac{1}{2}$$

$$= 138.675 \text{ kNm}$$

For Fe415, $M_{u\,lim} = 0.138\, f_{ck}\, bd^2$

$$\Rightarrow \quad 138.675 \times 10^6 = 0.138\,(20)\,(1000)\, d^2$$

$$\Rightarrow \quad d = 224.15 \text{ mm} < 465 \text{ mm} \qquad \text{(OK)}$$

Thus footing depth, $D = 550$ mm

Reinforcement required:

Critical moment, $M = 138.675$ kNm

$$R = \frac{M}{bd^2} = \frac{138.675 \times 10^6}{1000 \times 465^2} = 0.6413 \text{ N/mm}^2$$

$$\therefore \quad \frac{p_t}{100} = \frac{A_{st}}{bd} = \frac{f_{ck}}{2f_y}\left[1 - \sqrt{1 - 4.598\frac{R}{f_{ck}}}\right]$$

$$= \frac{20}{2(415)}\left[1 - \sqrt{1 - 4.598 \times \frac{0.6413}{20}}\right] = 0.001847$$

∴ $p_t = 0.1847\% < 0.3\%$ as assumed earlier in one-way shear. (OK)

0.3% tension reinforcement is provided.

$$\Rightarrow \qquad A_{st\,reqd.} = \frac{0.3}{100} \times 1000 \times 465 = 1395 \text{ mm}^2/\text{m width of footing.}$$

∴ With 20 mm ϕ bars, spacing required

$$s = \frac{100 \times \frac{\pi}{4} \times 20^2}{1395} = 225.2 \text{ mm c/c}$$

Provide 20ϕ @ 200 c/c both ways

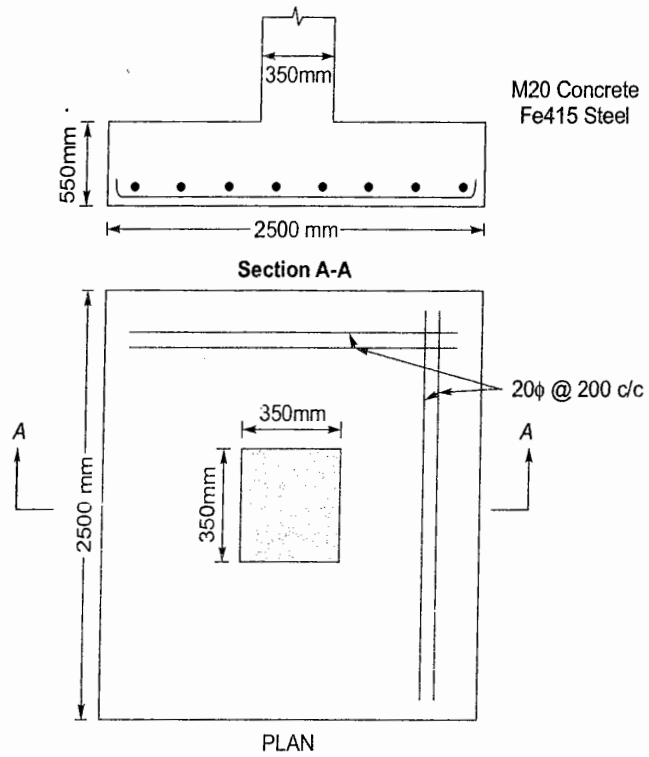


**Reinforcement Details**

2.3 A reinforced concrete beam 30 cm × 60 cm in section is reinforced with 4 bars 16 ϕ at top and 5 bars 22 ϕ at bottom with an effective cover of 4 cm. Assume safe compressive strength of concrete = 50 kg/cm²; $\sigma_{sc}$ = 1400 kg/cm², $m$ = 19. Find moment of resistance (WSM).

[SSC JE - 2007 : 15 Marks]

Solution:

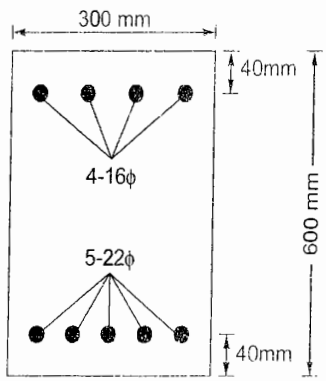


$$\sigma_c = 50 \text{ kg/cm}^2 = 4.9 \text{ N/mm}^2$$
$$\sigma_s = 1400 \text{ kg/cm}^2 = 137.3 \text{ N/mm}^2$$
$$m = 19$$
$$A_{st} = 5 \times \frac{\pi}{4} \times 22^2 = 1900.66 \text{ mm}^2$$
$$A_{sc} = 4 \times \frac{\pi}{4} \times 16^2 = 804.25 \text{ mm}^2$$
$$d = 600 - 40 = 560 \text{ mm}$$
$$C = T$$

$$\Rightarrow \qquad \frac{bn^2}{2} + (m-1)A_{sc}(n-d_c) = mA_{st}(d-n)$$

$$\Rightarrow \quad \frac{300n^2}{2}+(19-1)804.25(n-40) = 19(1900.66)(560-n)$$

$$\Rightarrow \quad 150n^2+14476.5n-579060 = 20223022.4-36112.54n$$

$$\Rightarrow \quad 150n^2+50589.04n-20802082.4 = 0$$

$$\therefore \quad n = 240.2 \text{ mm}$$

Location of critical neutral axis, $n_c = \left(\frac{m\sigma_c}{m\sigma_c+\sigma_s}\right)d = \left(\frac{19\times4.9}{19\times4.9+137.3}\right)560$

$$= 226.28 \text{ mm} < n\,(= 240.2 \text{ mm})$$

$\because \quad n > n_c$

$\therefore$ Stress in concrete will reach its maximum value i.e., $\sigma_c = 4.9$ N/mm$^2$

$\therefore$ Stress in concrete at the level of compression steel is given by

$$c' = c\left(\frac{n-d_c}{n}\right) = 4.9\left(\frac{240.2-40}{240.2}\right) = -4.084 \text{ N/mm}^2$$

$\therefore$ Moment of resistance, $M = bn\frac{c}{2}\left(d-\frac{n}{3}\right)+(m-1)A_{sc}.c'(d-d_c)$

$$= \frac{300\times240.2\times4.9}{2}\left(560-\frac{240.2}{3}\right)$$

$$+(19-1)804.25(4.084)(560-40)$$

$$= 84.73\times10^6+30.74\times10^6$$

$$= 115.47\times10^6 \text{ Nmm}$$

$$\simeq 115.5 \text{ kNm}$$

$\therefore$ Moment of resistance of beam section is 115.5 kNm.

**2.4 Design a reinforced concrete beam with balanced section for flexure by working stress method for the data given below (WSM)**

**Effective span (simply supported) = 8 m**

**Live load = 12 kN/m**

**Breadth of the beam = 300 mm**

Concrete grade = M20

Reinforcement steel grade = Fe415

[SSC JE - 2007 : 15 Marks]

Solution:

Effective span, $l = 8$ m

Live load, $LL = 12$ kN/m

Width of beam, $b = 300$ mm

M20 concrete and Fe415 are to be used.

$\therefore \quad \sigma_{cbc} = 7$ N/mm$^2$

For balanced section, $Q = \frac{M_{rb}}{\sigma_{cbc}.bd^2} = 0.1304$

Let overall depth of beam, $D = 550$ mm and 50 mm is effective cover

$\therefore \quad d = 550 - 50 = 500$ mm

$\therefore$ Self weight of beam $= 0.3 \times 0.55 \times 25 = 4.125$ kN/m

$\therefore$ Total load, $w = 4.125 + 12 = 16.125$ kN/m

$\therefore$ Moment, $M = \dfrac{wl^2}{8} = 16.125 \times \dfrac{8^2}{8} = 129$ kNm

$\therefore$ $Q = \dfrac{M}{\sigma_{cbc} bd^2} = 0.1304$

$\Rightarrow$ $\dfrac{129 \times 10^6}{7 \times 300 \times d^2} = 0.1304$

$\Rightarrow$ $d = 686.35 > 500$ (So insufficient depth)

Provide 750 mm deph

$\therefore$ $D = 750 + 50 = 800$ mm

Self weight $= 0.3 \times 0.8 \times 25 = 6$ kN/m

Total load $= 6 + 12 = 18$ kN/m

Moment $(M) = \dfrac{wl^2}{8} = \dfrac{18(8)^2}{8} = 144$ kNm

$\theta = \dfrac{M}{\sigma_{cbc} bd^2} = 0.1304$

$\dfrac{144 \times 10^6}{7 \times 300 \times d^2} = 0.1304$

$\Rightarrow$ $d = 725.16 < 750$ (OK)

**Reinforcement:**

$p_{t,\,bal} = \dfrac{A_{st\,bal}}{bd} \times 100 = 0.438$

$\Rightarrow$ $A_{st\,bal} = 985.5$ mm$^2$

$\therefore$ No. of 20 mm dia. bars required $= \dfrac{985.5}{\frac{\pi}{4} \times 20^2} = 3.13 \simeq 4$ bars (say)

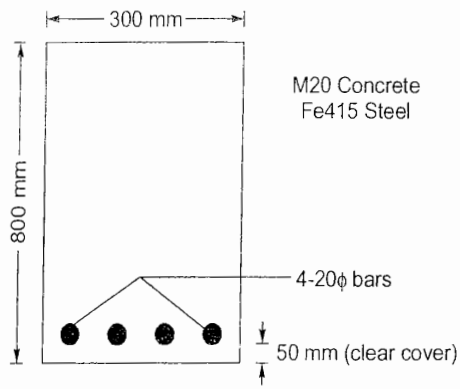


Reinforcement details

2.5 Design a circular tank of 13.75 m diameter and 3.0 m height of wall. Free board = 0.3 m. The tank rests on a firm ground. The walls are fixed at base and free at top.

[SSC JE - 2007 : 30 Marks]

**Solution:**

Diameter of tank = 13.75 m

Height of wall = 3 m

Free board = 0.3 m

Let M20 concrete and Fe415 steel bars are used.

**Permissible stresses:**

$$\sigma_{ct} = 1.2 \text{ N/mm}^2 \text{ (for tank walls)}$$
$$\sigma_{cc} = 5 \text{ N/mm}^2$$
$$\sigma_{st} = 150 \text{ N/mm}^2$$
$$m = 13$$

**Reinforcement in tank wall:**

$$\text{Maximum hoop tension} = \frac{1}{2}\rho gHD = \frac{1}{2}(1000)9.81(3)13.75 \text{ N}$$
$$= 202.33 \text{ kN}$$

∴ Tension reinforcement per meter height of tank is,

$$A_{st} = \frac{202.33 \times 10^3}{150} = 1348.87 \text{ mm}^2$$

$$\text{Using 12 mm dia. bars, spacing, } s = \frac{1000A_\phi}{A_{st}} = \frac{1000 \times \frac{\pi}{4} \times 12^2}{1348.87} = 83.85 \text{ mm c/c}$$

∴ Provide 12 mm dia. bars @ 80 mm c/c spacing on either face of the wall.

Also provide nominal reinforcement of 10ϕ @ 200 c/c.

**Thickness of tank wall:**

Let, wall thickness = $t$

$$\therefore \quad \sigma_{ct} = \frac{0.5\rho gHD}{100t + (m-1)A_{st}}$$

$$\Rightarrow \quad 1.2 = \frac{0.5 \times 1000 \times 9.81 \times 3 \times 13.75}{1000t + (13-1)1348.87}$$

$$\Rightarrow \quad t = 152.42 \text{ mm}$$

∴ Provide 200 mm wall thickness.

**Tank base design:**

Let thickness of base slab = 200 mm

Provide a layer of lean concrete (M10) 75 mm thick below the tank base.

$$\text{Provide a mat of orthogonal reinforcement @ 0.3\%} = \frac{0.3}{100} \times 1000 \times 200 = 600 \text{ mm}^2 \text{ in each direction.}$$

$$\therefore \quad \text{Reinforcement on one face} = \frac{600}{2} = 300 \text{ mm}^2$$

$$\therefore \quad \text{Spacing of 10 mm dia. bars} = \frac{1000 \times \frac{\pi}{4} \times 10^2}{300} = 261.8 \text{ mm c/c} \simeq 250 \text{ mm (say)}$$

∴ Provide 10 mm dia. bars @ 250 mm c/c

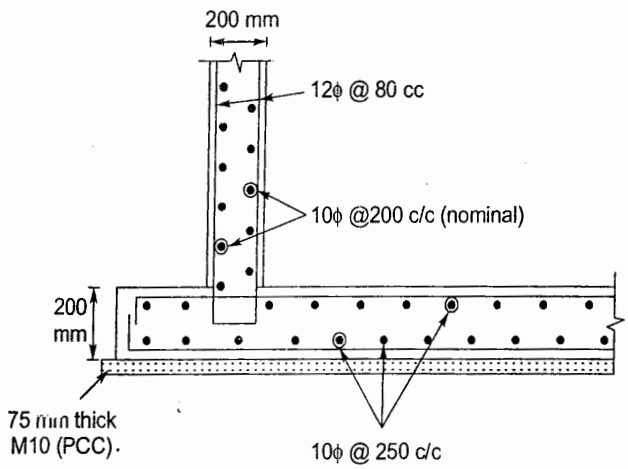


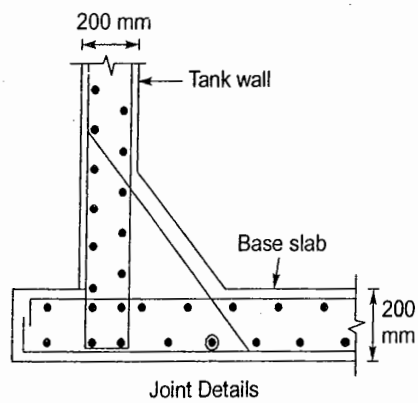


**2.6 Design a simply supported RCC slab for an office floor having clear dimensions of 4 m by 10 m with 230 mm walls all-around. Adopt M20 grade concrete and Fe415 grade HYSD bars.**

**[SSC JE - 2008 : 20 Marks]**

**Solution:**

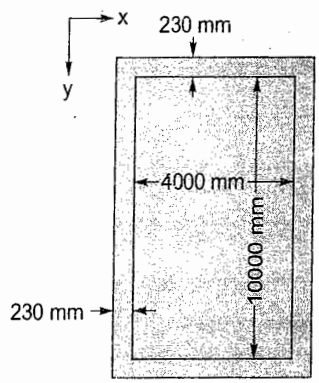


Clear span along $x$ = 4000 mm

Clear span along $y$ = 10000 mm

Centre to centre distance between supports along

$$x = 4000 + \frac{230}{2} + \frac{230}{2} = 4230 \text{ mm}$$

Centre to centre distance between supports along

$$y = 10000 + \frac{230}{2} + \frac{230}{2} = 10230 \text{ mm}$$

Aspect ratio, $$r = \frac{10230}{4230} = 2.42 > 2$$

$\Rightarrow$ One-way slab

M20 and Fe415 are to be used.

Ultimate moment of resistance,

$$M_{u\,lim} = 0.138\, f_{ck}\, bd^2$$

Let Live load = 3 kN/m$^2$

Let Thickness of slab = 135 mm with 20 mm clear cover

$\therefore$ Dead load of slab = 0.135 × 25 = 3.375 kN/m$^2$

$\therefore$ Total load = 3.375 + 3 = 6.375 kN/m$^2$

$\therefore$ Factored load ($w$) = 1.5 × 6.375 = 9.5625 kN/m$^2$ ≃ 9.56 kN/m$^2$

Assume width of slab ($b$) = 1000 mm

$\therefore$ Factored moment ($M$) = $\dfrac{9.56 \times 10.23^2}{8}$ = 125.06 kNm/m width of slab

$\therefore$ $M_{u\,lim} = 0.138\, f_{ck}\, bd^2$

$\Rightarrow$ $125.06 \times 10^6 = 0.138\,(20)\,(1000)\, d^2$

$\Rightarrow$ $d = 212.86 \text{ mm} > 135 - 20 - \dfrac{10}{2} = 110 \text{ mm}$ (Assumed above)

Revise slab thickness to 250 mm so that effective depth of slab

$$= 250 - 20 - \frac{10}{2} = 225 \text{ mm}$$

$\therefore$ Revised dead load of slab $= 0.25 \times 25 = 6.25$ kN/m$^2$

$\therefore$ Revised factored load $= 1.5\,(6.25 + 3) = 13.875$ kN/m$^2$

$\therefore$ Factored moment $(M) = 13.875 \times \frac{10.23^2}{8} = 181.5$ kNm

$\therefore$ $M_{u\,lim} = 0.138\, f_{ck}\, bd^2$

$\Rightarrow$ $181.5 \times 10^6 = 0.138\,(20)\,(1000)\, d^2$

$\Rightarrow$ $d = 256.4 \text{ mm} > 225 \text{ mm}$ (Not safe)

Revise slab thickness to 350 mm so that

$$d = 350 - 20 - \frac{10}{2} = 325 \text{ mm}$$

Dead load of slab $= 0.35 \times 25 = 8.75$ kN/m$^2$

$\therefore$ Factored load $= 1.5\,(8.75 + 3) = 17.625$ kN/m$^2$

$\therefore$ Factored moment $= 17.625 \times \frac{10.23^2}{8} = 230.56$ kNm

$\therefore$ $M_{u\,lim} = 0.138\, f_{ck}\, bd^2$

$\Rightarrow$ $230.56 \times 10^6 = 0.138\,(20)\,(1000)\, d^2$

$\Rightarrow$ $d = 289 \text{ mm} < 325 \text{ mm}$ (OK)

Thus slab depth can be reduced.

Let depth of slab = 325 mm.

So that $d = 325 - 20 - \frac{10}{2} = 300$ mm

$\therefore$ Dead load of slab $= 0.325 \times 25 = 8.125$ kN/m$^2$

$\therefore$ Factored load $= 1.5\,(8.125 + 3) = 16.6875$ kN/m$^2 \simeq 16.7$ kN/m$^2$

$\therefore$ Factored moment $= 16.7 \times \frac{10.23^2}{8} = 218.5$ kNm

$\therefore$ $M_{u\,lim} = 0.138\, f_{ck}\, bd^2$

$\Rightarrow$ $218.5 \times 10^6 = 0.138\,(20)\,(1000)\, d^2$

$\Rightarrow$ $d = 281.4 \text{ mm} < 300 \text{ mm}$ (OK)

$\therefore$ Provide slab thickness of 325 mm.

Reinforcement required:

$$\frac{p_t}{100} = \frac{A_{st}}{bd} = \frac{0.5 f_{ck}}{f_y}\left[1 - \sqrt{1 - 4.598\frac{R}{f_{ck}}}\right]$$

where, $R = \frac{218.5 \times 10^6}{1000 \times 300^2} = 2.43$ N/mm$^2$

$$= \frac{0.5(20)}{415}\left[1 - \sqrt{1 - 4.598 \times \frac{2.43}{20}}\right] = 0.008088$$

$\therefore \quad p_t = 0.81\%$

$$A_{st} = \frac{0.81}{100} \times 1000 \times 300 = 2430 \text{ mm}^2$$

Using 10 m $\phi$ bars, spacing $(s) = \dfrac{1000 A_\phi}{A_{st}} = \dfrac{1000 \times \frac{\pi}{4} \times 10^2}{2430} = 32.3$ mm c/c (Too close)

Using 16 mm $\phi$ bars, spacing $(s) = \dfrac{1000 \times \frac{\pi}{4} \times 16^2}{2430} = 82.74$ mm c/c

$\therefore$ Provide 16 mm dia. bars @ 80 mm c/c spacing.

Provide reinforcement in the transverse direction @ 0.12% of gross area

$$= \frac{0.12}{100} \times 1000 \times 325 = 390 \text{ mm}^2/\text{m length of slab}.$$

$\therefore$ Spacing required with 10 mm dia. bars

$$= \frac{1000 \times \frac{\pi}{4} \times 10^2}{390} = 201.38 \text{ mm}$$

$< 5d (= 5 \times 300 = 1500 \text{ mm})$ (OK)

$\therefore$ Provide 10 mm dia. bars @ 190 mm c/c as transverse reinforcement.

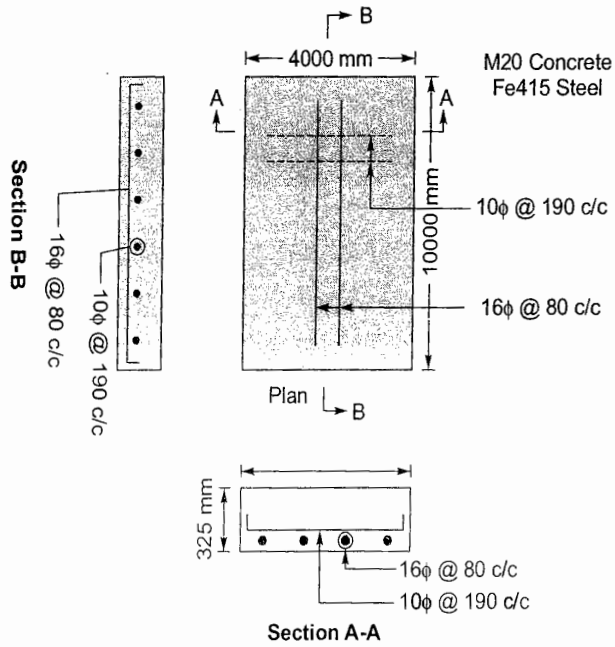


**Reinforcement Details**

Note: Since slab is simply supported and thus no torsional reinforcement at corners is needed.

2.7 Design a cantilever retaining wall to retain an earth embankment 4 m high above ground level. The density of earth is 18 kN/m$^3$ and its angle of repose is 30°. The embankment is horizontal at top. The safe bearing capacity of the soil may be taken as 200 kN/m$^2$ and the coefficient of friction between soil and concrete is 0.5. Adopt M20 grade concrete and Fe415 HYSD bars.

[SSC JE - 2008 : 30 Marks]

Solution:

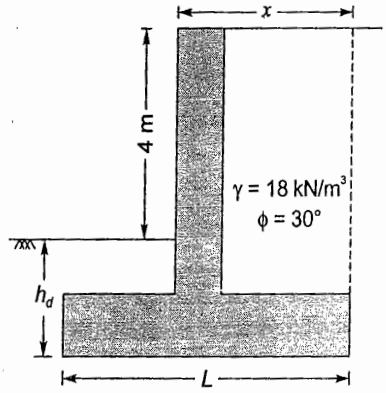


Safe bearing capacity of soil (SBC) $(p) = 200$ kN/m²

Coefficient of friction between soil and concrete $(\mu) = 0.5$

M20 concrete and Fe415 steel are to be used.

Depth of footing required as per Rankine's formula

$$h_d = \frac{p}{\gamma}\left(\frac{1-\sin\phi}{1+\sin\phi}\right)^2$$

$$= \frac{200}{18}\left(\frac{1-\sin 30°}{1+\sin 30°}\right)^2 = 1.23 \text{ m}$$

Let depth of footing $(h_d) = 1.5$ m

$\therefore$ Total height of retaining wall $(h) = 4 + 1.5 = 5.5$ m

Coefficient of active earth pressure

$$k_a = \frac{1-\sin\phi}{1+\sin\phi} = \frac{1-\sin 30°}{1+\sin 30°} = \frac{1}{3}$$

Coefficientof passive earth pressure

$$k_p = \frac{1+\sin\phi}{1-\sin\phi} = \frac{1+\sin 30°}{1-\sin 30°} = 3$$

The length '$x$' as shown in figure above is given by

$$x = \left(\sqrt{\frac{k_a}{3}}\right)h = \left(\sqrt{\frac{1}{3\times 3}}\right)4.5 = 1.5 \text{ m}$$

Assuming triangular base pressure distribution below the footing,

$$L = \frac{3}{2}x = \frac{3}{2}(1.5) = 2.25 \text{ m}$$

**Stability against overturning:**

The preliminary dimensions of the retaining wall as assumed are shown below along with earth forces acting on it.

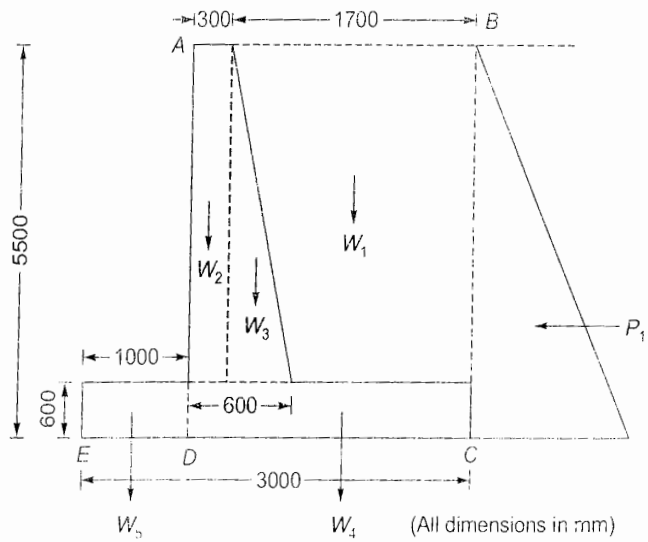

Lateral force on wall due to active earth pressure

$$P_1 = \frac{1}{2}k_a\gamma h^2 = \frac{1}{2}\left(\frac{1}{3}\right)(18)(5.5)^2$$

$$= 90.75 \text{ kN per meter length of wall.}$$

∴ Overturning moment (about point $E$) = $M_o$

$$= P_1\left(\frac{h}{3}\right) = 90.75\left(\frac{5.5}{3}\right) = 166.375 \text{ kNm/m length of wall.}$$

Stabilising moment will be provided by weight of wall and soil.

Weight of soil ($W_1$) = 18 (1.7) (5.5 – 0.6)

$$= 149.94 \text{ kN/m acting at } \frac{1.7}{2} = 0.85 \text{ m from point } C.$$

∴ Moment ($M_1$) = 149.94 × 0.85 = 127.45 kN/mm about $C$

Weight of rectangular portion of stem ($W_2$)

$$= 0.3\,(5.5 - 0.6)\,25$$

$$= 36.75 \text{ kN/m acting at } \left(1.7 + \frac{0.3}{2}\right) = 1.85 \text{ m from } C.$$

∴ Moment ($M_2$) = 36.75 × 1.85 = 67.99 kNm/m about $C$.

Weight of triangular portion of stem ($W_3$)

$$= \frac{1}{2}(0.6 - 0.3)(5.5 - 0.6)(25 - 19)$$

$$= 4.41 \text{ kN/m acting at } \left(1.7 - \frac{0.3}{3}\right) = 1.6 \text{ m from } C.$$

∴ Moment ($M_3$) = 4.41 × 1.6 = 7.06 kNm/m about $C$.

Weight of base slab portion DC ($W_4$)

$$= 0.6 \times (3 - 1)25 = 30 \text{ kN/m acting at } \frac{2}{2} = 1 \text{ m from } C.$$

Moment ($M_4$) = 30 × 1 = 30 kNm/m about $C$.

Weight of base slab portion ED ($W_5$)

$$= 0.6 \times 1 \times 25 = 15 \text{ kN/m acting at } \left(2 + \frac{1}{2}\right) = 2.5 \text{ m from } C.$$

∴ Moment ($M_5$) = 15 × 2.5 = 37.5 kNm/m about $C$.

∴ Total weight ($W$) = $W_1 + W_2 + W_3 + W_4 + W_5$ = 236.1 kN/m

Total restoring moment about $C$

$$(M_w) = M_1 + M_2 + M_3 + M_4 + M_5 = 270 \text{ kNm/m}$$

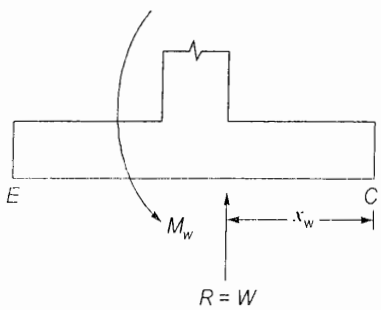

$$x_w = \frac{M_w}{R} = \frac{M_w}{W} = \frac{270}{236.1} = 1.14 \text{ m from } C$$

∴ Stablising moment about $E$

$$M_A = W(L - x_w) = 236.1\,(3 - 1.14) = 439.15 \text{ kNm/m about } E$$

∴ $$\text{FOS against overturning} = \frac{0.9M_r}{M_o} = \frac{0.9(439.15)}{166.375} = 2.4 > 1.4 \quad \text{(OK)}$$

∴ Retaining wall is safe against overturning.

**Check for soil pressure at base:**

Resultant upward reaction = $R = W = 236.1$ kN

Distance of resultant ($R$) from and $C$= $L_R = \frac{M_o + M_w}{R} = \frac{166.375 + 270}{236.1} = 1.85$ m from $C$.

∴ $$\text{Eccentricity } (e) = L_R - \frac{L}{2} = 1.85 - \frac{3}{2} = 0.35 \text{ m} < \frac{L}{6} (= 0.5 \text{ m}) \quad \text{(OK)}$$

i.e., $$\frac{6e}{L} = \frac{6 \times 0.35}{3} = 0.7 < 1 \quad \text{(OK)}$$

∴ $$\text{Soil pressure at base } (q) = \frac{R}{L}\left(1 \pm \frac{6e}{L}\right) = \frac{236.1}{3}\left(1 \pm \frac{6 \times 0.35}{3}\right)$$

$$= \begin{cases} 133.79 \text{ kN/m}^2 < 200 \text{ kN/m}^2 (SBC) \text{ (OK)} \\ 23.61 \text{ kN/m}^2 > 0 \text{ (OK)} \end{cases}$$

**Check for stability against sliding:**

$$\text{Sliding force } (P_a) = P_1 = 90.75 \text{ kN/m}$$

$$\text{Restoring force } (F) = \mu R = 0.5\,(236.1) = 118.05 \text{ kN/m}$$

∴ $$\text{FOS against sliding} = \frac{0.9F}{P_a} = \frac{0.9(118.05)}{90.75} = 1.17 < 1.4 \quad \text{(Not OK)}$$

∴ A shear key is required to generate the passive resistance.

$$\text{Passive resistance required } (P_p) = 1.4\,(90.75) - 0.9\,(118.05) = 20.181 \text{ kN/m}$$

Provide a shear key of 300 × 300 mm at a distance of 1500 mm from $E$ so that stem reinforcement can be taken directly to shear key.

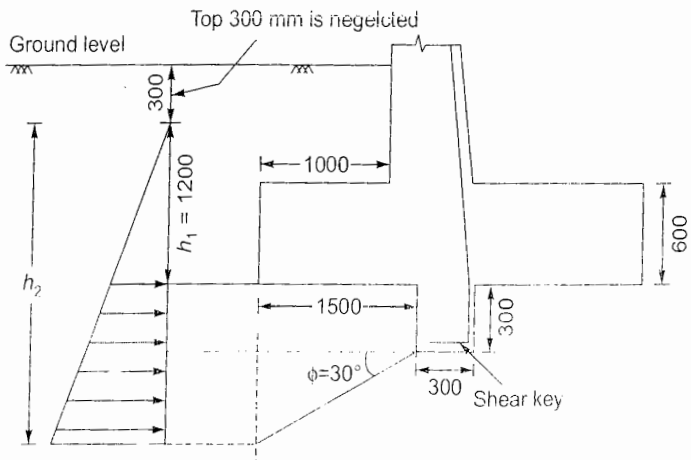

$$h_1 = 1500 - 300 = 1200 \text{ mm} = 1.2 \text{ m}$$

$$h_2 = h_1 + 300 + 1500 \tan 30°$$

$$= 1200 + 300 + 1500 \tan 30°$$

$$= 2366.03 \text{ mm} \simeq 2366 \text{ mm} = 2.366 \text{ m}$$

$\therefore$ Passive resistance $(P_p) = \frac{1}{2} k_p \gamma \left(h_2^2 - h_1^2\right)$

$$= \frac{1}{2}(3)(18)\left(2.366^2 - 1.2^2\right)$$

$$= 112.26 \text{ kN/m} > 20.81 \text{ kN/m} \quad \text{(OK)}$$

**Design of toe slab:**

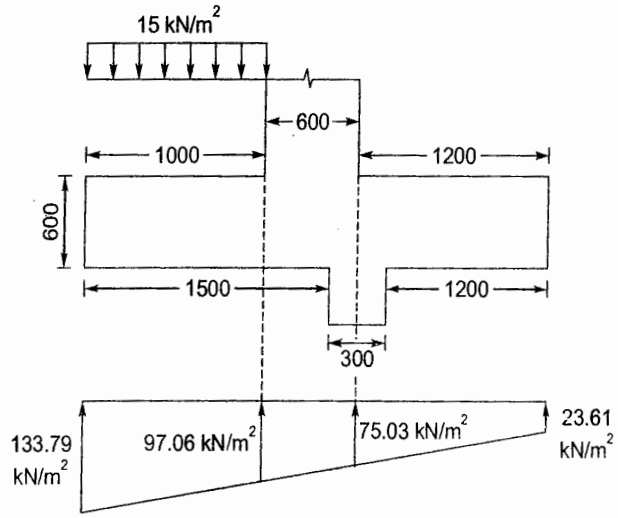


Downward acting load of toe slab $= 0.6 \times 25 = 15 \text{ kN/m}^2$

Let clear cover = 75 mm and dia. of bar = 20 mm

$\therefore$ Effective depth of toe slab $(d) = 600 - 75 - \frac{20}{2} = 515$ mm

$\therefore$ Factored moment at the face of stem $(M_u)$

$$= 1.5\left[\frac{1}{2}(1.33.79 + 97.06)(1)\left(\frac{97.06 + 2 \times 133.79}{97.06 + 133.79}\right)\frac{1}{3} - 1.5 \times 1 \times \frac{1}{2}\right]$$

$$= 1.5\,[60.77 - 7.5] = 79.91 \text{ kNm/m}$$

Factored shear force (at distance '$d$' from stem face)

$$V_u = 1.5\left[\frac{1}{2}(133.79 + 115.98)(1 - 0.515)\right] = 90.85 \text{ kN/m}$$

Nominal shear stress, $\tau_u = \frac{V_u}{bd} = \frac{90.85 \times 1000}{1000 \times 515} = 0.176 \text{ N/mm}^2$

$$\frac{p_t}{100} = \frac{A_{st}}{bd} = \frac{f_{ck}}{2f_y}\left[1 - \sqrt{1 - 4598\frac{R}{f_{ck}}}\right]$$

$$\text{where } R = \frac{M_u}{bd^2} = \frac{79.91\times10^6}{1000\times515^2} = 0.3013 \text{ N/mm}^2$$

$$\therefore \quad \frac{p_t}{100} = \frac{A_{st}}{bd} = \frac{20}{2(415)}\left[1-\sqrt{1-4.598\frac{0.3013}{20}}\right] = 0.0008495$$

$$\therefore \quad p_t = 0.085\% \text{ (Too small)}$$

$$\frac{A_{st\,min}}{bd} \geq \frac{0.85}{f_y}$$

$$\Rightarrow \quad p_{t\,min} = \frac{85}{f_y} = \frac{85}{415} = 0.205\%$$

Let 0.3% reinforcement is provided.

$$\therefore \quad A_{st} = \frac{0.3}{100}(1000)(515) = 1545 \text{ mm}^2/\text{m}$$

$$\therefore \quad \text{Spacing of 20 mm dia. bars} = \frac{1000A_\phi}{A_{st}} = \frac{1000\times\frac{\pi}{4}(20)^2}{1545} = 203.3 \text{ mm c/c}$$

Provide 20 mm dia. bars @ 180 mm c/c

Design shear strength of concrete for 0.3% steel and M20 concrete ($\gamma_c$)

$$= 0.388 \text{ N/mm}^2 > \tau_v (= 0.176 \text{ N/mm}^2) \qquad \text{(OK)}$$

$$\text{Development length } (L_d) = \frac{0.87f_y}{4(1.6\tau_{bd})}\phi = \frac{0.87(415)}{4(1.6\times1.2)}\phi = 47\phi$$

$$= 47 \times 20 = 940 \text{ mm (beyond the stem face)}$$

$$\text{Distribution reinforcement @ 0.12\%} = \frac{0.12}{100}\times1000\times515 = 618 \text{ mm}^2/\text{m}$$

$$\therefore \quad \text{Spacing of 16 mm dia. distribution bars} = \frac{1000\times\frac{\pi}{4}\times16^2}{618} = 325.3 \text{ mm c/c but} \not> 300 \text{ mm}$$

Provide 16 $\phi$ distribution bars @ 280 mm c/c

Design of heel slab:

Load due to soil overburden = (5.5 – 0.6) 18 = 88.2 kN/m²

Self weight of heel slab = 0.6 × 25 = 15 kN/m²

∴ Total downward acting load = 88.2 + 15 = 103.2 kN/m²

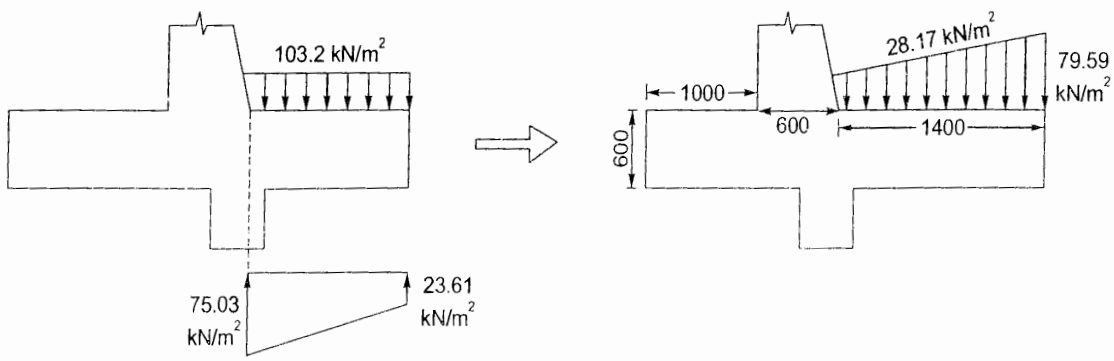

Factored moment at stem face $(M_u) = 1.5\left[\frac{1}{2}(28.17+79.59)1.4\left(\frac{2\times 79.59+28.17}{79.59+28.17}\right)\frac{1.4}{3}\right] = 91.8$ kNm/m

Factored shear face at stem face $(V_u) = 1.5\left[\frac{1}{2}(28.17+79.59)1.4\right] = 113.15$ kN/m

Effective depthof heel slab $(d) = 600 - 75 - \frac{20}{2} = 515$ mm

$$\therefore \quad \frac{p_t}{100} = \frac{A_{st}}{bd} = \frac{f_{ck}}{2f_y}\left[1-\sqrt{1-4.598\frac{R}{f_{ck}}}\right]$$

$$\text{where } R = \frac{M_u}{bd^2} = \frac{91.8\times 10^6}{1000\times 515^2} = 0.346 \text{ N/mm}^2$$

$$= \frac{20}{2(415)}\left[1-\sqrt{1+4.598\frac{0.346}{20}}\right] = 0.000978$$

$$\therefore \quad p_t = 0.098\%$$

But, $$p_{t\,min} = \frac{85}{f_y} = \frac{85}{415} = 0.205\%$$

Provide 0.3% reinforcement.

$$\therefore \quad A_{st} = \frac{0.3}{100}\times 1000\times 515 = 1545 \text{ mm}^2/\text{m}$$

$$\therefore \quad \text{Spacing of 20 mm dia. bars} = \frac{1000A_\phi}{A_{st}} = \frac{1000\times\frac{\pi}{4}\times 20^2}{1545} = 203.3 \text{ mm c/c}$$

Provide 20 mm dia. bars @ 180 mm c/c.

$$\text{Nominal shear stress } (\tau_v) = \frac{V_u}{bd} = \frac{113.15\times 10^3}{1000\times 515} = 0.22 \text{ N/mm}^2$$

Design shear strength of concrete $(\tau_c) = 0.388$ N/mm$^2 > \tau_v$ (= 0.22 N/mm$^2$) (OK)

$$\text{Development length } (L_d) = \frac{0.87f_y}{4(1.6\gamma_{bd})}\phi = 47\phi = 47(20) = 940 \text{ mm} \quad \text{(beyond stem face)}$$

Distribution reinforcement @ 0.12% $= \frac{0.12}{100}\times 1000\times 515 = 618$ mm$^2$ i.e. 16$\phi$ bars @ 280 mm c/c

**Design of stem:**

Height of stem above base = 5.5 – 0.6 = 4.9 m

Let clear cover = 50 mm and bar dia. = 20 mm

$\therefore$ Effective depth of stem at base $(d) = 600 - 50 - \frac{20}{2} = 540$ mm

Factored moment at base of stem $(M_u) = \frac{1}{6}k_a\gamma h^3 = \frac{1}{6}\left(\frac{1}{3}\right)(18)(4.9)^3 = 117.65$ kNm/m

$$\therefore \quad R = \frac{M_u}{bd^2} = \frac{117.65\times 10^6}{1000\times 540^2} = 0.403 \text{ N/mm}^2$$

$$\therefore \quad \frac{p_t}{100} = \frac{A_{st}}{bd} = \frac{f_{ck}}{2f_y}\left[1-\sqrt{1-4.598\frac{R}{f_{ck}}}\right]$$

$$= \frac{20}{2(415)}\left[1-\sqrt{1-4.598\frac{0.403}{20}}\right] = 0.0011433$$

$$\therefore \quad p_t = 0.114\%$$

But $$p_{t\,min} = \frac{85}{f_y} = \frac{85}{415} = 0.205\%$$

Provide 0.3% reinforcement.

$$\therefore \quad A_{st} = \frac{0.3}{100}\times 1000\times 540 = 1620 \text{ mm}^2/\text{m}$$

$$\therefore \quad \text{Spacing of 20 mm dia. bars} = \frac{1000A_\phi}{A_{st}} = \frac{1000\times\frac{\pi}{4}\times 20^2}{1620} = 193.9 \text{ mm c/c}$$

Provide 20 mm dia. bars @ 180 mm c/c.

Cricitcal section for shear will be at a distance '*d*' above the base of stem i.e., (4.9 – 0.54) = 4.36 m below the top of stem.

$$\therefore \quad \text{Factored shear force } (V_u) = 1.5\left[\frac{1}{2}k_a\gamma h^2\right]$$

$$= 1.5\left[\frac{1}{2}\left(\frac{1}{3}\right)(18)(4.36)^2\right] = 85.54 \text{ kN/m}$$

$$\therefore \quad \text{Nominal shear stress } (\gamma_u) = \frac{V_u}{bd} = \frac{85.54\times 10^3}{1000\times 540} = 0.158 \text{ N/mm}^2$$

$$< \tau_c (= 0.388 \text{ N/mm}^2) \qquad \text{(OK)}$$

Provide 16 $\phi$ distribution @ 280 mm c/c.

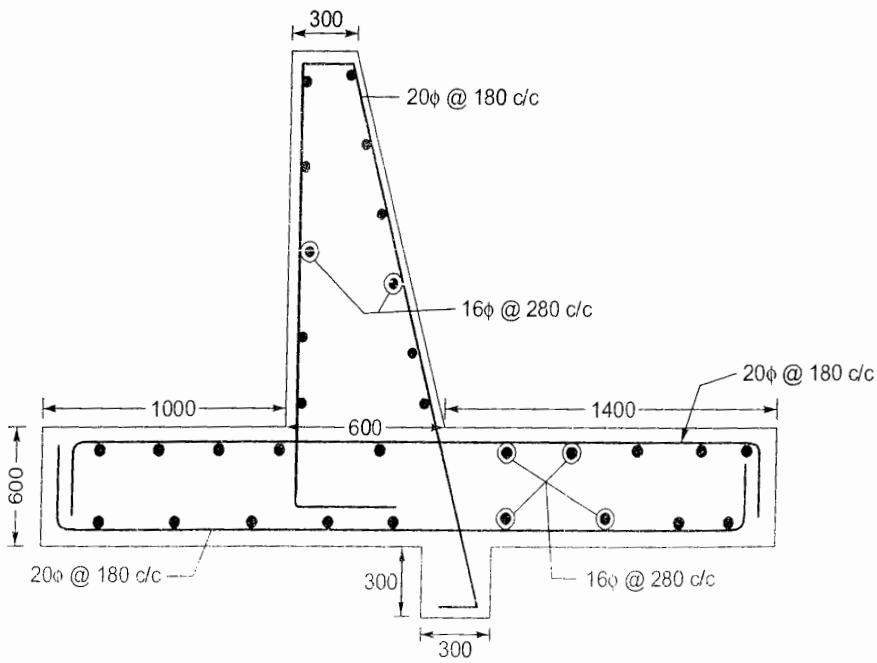


Reinforcement details

2.8 A reinforced concrete beam 400 mm × 650 mm (effective) in section is reinforced with 3 bars of 28 mm ϕ. If the effective span is 5 m, find the concentrated load the beam can support at the centre. Assume M20 concrete and Fe250 steel ($m$ = 13.33).

[SSC JE - 2009 : 15 Marks]

Solution:

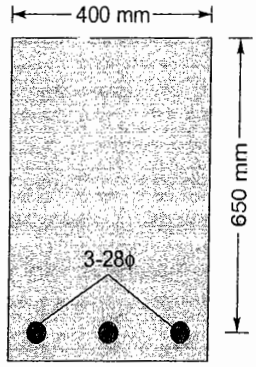


Effective span of beam ($l$) = 5 m

M20 concrete.

Fe250 steel.

Modular ratio ($m$) = 13.33

Let effective cover = 50 mm

∴ Overall depth of beam ($D$) = 650 + 50 = 700 mm

Area of tension steel ($A_{st}$) = $\frac{\pi}{4} \times 28^2 \times 3 = 1847.3 \text{ mm}^2$

Self weight of beam = 0.4 × 0.7 × 25 = 7 kN/m

**Actual depth of neutral axis:**

$$0.5\, b n_a^2 = m A_{st} (d - n_a)$$

$$\Rightarrow \quad 0.5\,(400)\, n_a^2 = 13.33\,(1847.3)\,(650 - n_a)$$

$$\Rightarrow \quad 200\, n_a^2 + 24624.509\, n_a - 16005930.85 = 0$$

$$\therefore \quad n_a = 227.95 \text{ mm}$$

**Critical depth of neutral axis:**

Critical depth of neutral axis, $n_c = \left[\frac{1}{1+\frac{\sigma_{st}}{m\sigma_{cbc}}}\right] d = \left[\frac{1}{1+\frac{230}{13.33(7)}}\right] 650 = 187.6 \text{ mm}$

Thus, $n_a > n_c$

⇒ Section is over-reinforced.

∴ Moment of resistance, $M = 0.5\sigma_{cbc} b n_a \left(d - \frac{n_a}{3}\right)$

$$= 0.5(7)(400)227.95\left(650 - \frac{227.95}{3}\right)$$

$$= 183.19 \text{ knm}$$

Moment due to self weight of beam

$$M_d = 7 \times \frac{5^2}{8} = 21.875 \text{ kNm}$$

Moment due to concentrated load W

$$M_w = \frac{Wl}{4} = W\left(\frac{5}{4}\right) = 1.25 \text{ W kNm}$$

$$\therefore \quad M_d + M_w = M$$

$$\Rightarrow \quad 21.875 + 1.25\, W = 183.19$$

$$\Rightarrow \quad W = 129.052 \text{ kN}$$

∴ Beam can support a maximum concentrated load of 129.052 kN.

**2.9 Design a column to carry a load of 590 kN. Height of the column is 3.5 m effective, one side of the column is restricted to 250 mm. Use $\sigma_{cc}$ = 5 N/mm², $\sigma_{sc}$ = 190 N/mm² and 10 mm ϕ lateral ties.**

[SSC JE - 2009 : 15 Marks]

**Solution:**

Axial load, $P = 590\text{ kN}$

Effective length of column, $l = 3.5\text{ m}$

$$\sigma_{cc} = 5\text{ N/mm}^2$$

$$\sigma_{sc} = 190\text{ N/mm}^2$$

$$P = \sigma_{cc}(A_g - A_{sc}) + \sigma_{sc}A_{sc}$$

$$\Rightarrow \quad 590 \times 10^3 = 5(A_g - A_{sc}) + 190\,A_{sc}$$

Let 1% reinforcement is provided.

$$\therefore \quad A_{sc} = 1\% \text{ of } A_g = \frac{A_g}{100}$$

$$\therefore \quad 590 \times 10^3 = 5\left(A_g - \frac{A_g}{100}\right) + 190\left(\frac{A_g}{100}\right)$$

$$\Rightarrow \quad 590 \times 10^3 = \frac{99 \times 5}{100}A_g + \frac{190}{100}A_g$$

$$\Rightarrow \quad A_g = 86131.4\text{ mm}^2$$

Now, one side of column = 250 mm

$$\therefore \quad \text{Other side of column} = \frac{86131.4}{250} = 344.5\text{ mm} \simeq 350\text{ mm (say)}$$

∴ Column size is 350 × 250 mm.

$$\therefore \quad \text{Area of steel } (A_{sc}) = 1\% \text{ of } A_g = \frac{350 \times 250}{100} = 875\text{ mm}^2$$

$$\therefore \text{ No. of 16 mm dia. bars required} = \frac{875}{\frac{\pi}{4}(16)^2} = 4.35 \simeq 6\text{(say)}$$

$$\text{No. of 20 mm dia. bars required} = \frac{875}{\frac{\pi}{4}(20)^2} = 2.8 \simeq 4\text{ (say)}$$

∴ Provide 4-20ϕ bars at the corners at a clear cover of 40 mm.

**Design of ties:**

$$\text{Tie diameter } (\phi_t) \geq \begin{cases} 20/4 = 5\text{ mm} \\ 6\text{ mm} \end{cases} = 6\text{ mm}$$

But given 10 mm dia. ties are to be provided which is greater than 6 mm (OK)

$$\text{Pitch} \leq \begin{cases} \text{Least lateral dimension} = 250\text{ mm} \\ 16\phi = 16 \times 20 = 320\text{ mm} \\ 300\text{ mm} \end{cases} = 250\text{ mm}$$

∴ Provide 10ϕ ties @ 200 m c/c

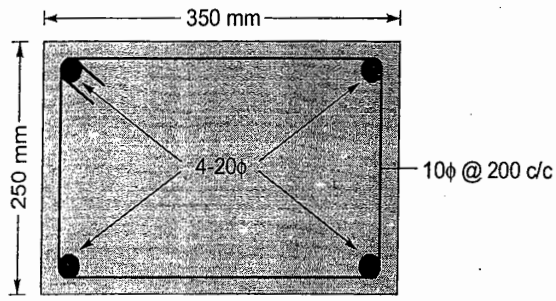


Reinforcement details

2.10 Design a cantilever slab to carry a superimposed load of 4188 N/m$^2$. The overhang of the slab is 1.2 m. Adopt M20 concrete and Fe415 steel.

[SSC JE - 2009 : 30 Marks]

Solution:

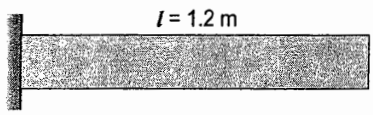


Overhang of slab = Clear span ($l$) = 1.2 m

Superimposed load = 4188 N/m$^2$ = 4.188 kN/m$^2$

$$\text{Let depth of slab} = \frac{\text{span}}{10} = \frac{1200}{10} = 120 \text{ mm}$$

Let slab depth ($D$) = 150 mm

Using 10 mm dia. bars, effective slab depth

$$d = 150 - 20 - \frac{1}{2}(10) = 125 \text{ mm}$$

Self weight of slab = 0.15 × 25 = 3.75 kN/m$^2$

∴ Total load = 3.75 + 4.188 = 7.938 kN/m$^2$

∴ Factored load ($w$) = 1.5 × 7.938 = 11.907 kN/m$^2$

$$\therefore \quad \text{Factored moment } (M) = 11.907 \times 1.2 \times \frac{1.2}{2} = 8.573 \text{ kNm/m width of slab}$$

For Fe 415, $M_{u\,lim} = 0.138\, f_{ck}\, bd^2$

⇒ $8.573 \times 10^6 = 0.138\,(20)\,(1000)\,d^2$ [Given M20 concrete is to be used]

⇒ $d = 55.733 \text{ mm} < 125 \text{ mm}$ (OK)

Reinforcement requirement:

$$\frac{p_t}{100} = \frac{A_{st}}{bd} = \frac{f_{ck}}{2f_y}\left[1 - \sqrt{1 - 4.598\frac{R}{f_{ck}}}\right]$$

$$\text{where } R = \frac{M}{bd^2} = \frac{8.573 \times 10^6}{1000 \times 125^2} = 0.549 \text{ N/mm}^2$$

$$= \frac{20}{2(415)}\left[1 - \sqrt{1 - 4.598 \times \frac{0.549}{20}}\right] = 0.0015719$$

∴ $p_t = 0.157\%$

Also, $$\frac{A_{st\,min}}{bd} = \frac{0.85}{f_y}$$

$$\Rightarrow \quad p_{t\,min} = \frac{85}{f_y} = \frac{85}{500} = 0.17\% > p_t\,(= 0.157\%)$$

Provide 0.17% steel.

$$\Rightarrow \quad A_{st} = \frac{0.17}{100} \times 1000 \times 125 = 212.5 \text{ mm}^2$$

$$\therefore \quad \text{Using 8 mm } \phi \text{ bars, spacing} = \frac{1000 A_\phi}{A_{st}} = \frac{1000 \times \frac{\pi}{4} \times 8^2}{212.5} = 236.54 \text{ mm c/c} \simeq 200 \text{ mm c/c (say)}$$

Provide 8 mm $\phi$ bars @ 200 mm c/c.

Also provide nominal distribution reinforcement @ 0.12% i.e.,

$$= \frac{1000 \times \frac{\pi}{4} \times 8^2}{\frac{0.12}{100} \times 1000 \times 125} = 335\text{mm spacing} \simeq 300 \text{ mm c/c (say)}$$

Provide 8 mm $\phi$ bar @ 300 mm c/c

**Anchorage length:**

$$\text{Anchorage/development length } (L_d) = \left(\frac{0.87 f_y}{4\tau_{bd}}\right)\phi = \frac{0.87 \times 415 \times 8}{4 \times 1.6 \times 1.2} = 376.09 \text{ mm}$$

Thus main reinforcement bars must external beyond the support for a distance of atleast 375 mm. A 90° bend will provide an additional anchorage value of $8\phi = 8 \times 8 = 64$ mm.

**Deflection check:**

For cantilever, $$\left(\frac{l}{d}\right)_{basic} = 7$$

$$\text{Percentage reinforcement provided} = \frac{1000 A_\phi / s}{bd} \times 100 = \frac{1000 \times \frac{\pi}{4} \times 8^2/200}{1000 \times 125} \times 100 = 0.201\%$$

$$\therefore \quad f_{st} = 0.58 \times 415 \times \frac{0.157}{0.201} = 188.01 \text{ N/mm}^2$$

$$\therefore \quad k_t = 2$$

$$\because \quad p_c = 0$$

$$\Rightarrow \quad k_c = 1$$

$$\therefore \quad \left(\frac{l}{d}\right)_{max} = \left(\frac{l}{d}\right)_{basic} k_t . k_c = 7 \times 2 \times 1 = 14$$

$$\left(\frac{l}{d}\right)_{prov.} = \frac{1200}{125} = 9.6 < 14 \qquad \text{(OK)}$$

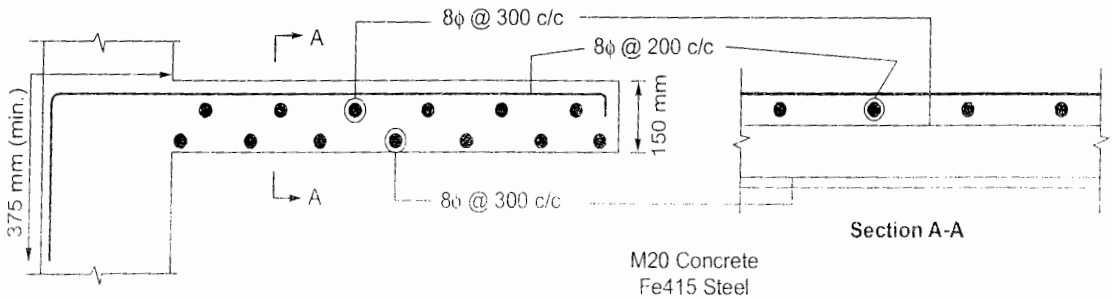


Reinforcement Details

**2.11 Design a cantilever beam with a clear span of 3 m which carries a superimposed load of 15 kN/m. Its depth varies from 500 mm at the fixed end to 150 mm at the free end. Show reinforcement with a neat sketch.**

[SSC JE - 2011 : 30 Marks]

**Solution:**

Clear span, $l = 3$ m

Superimposed load = 15 kN/m

Let width of beam, $b = 300$ mm

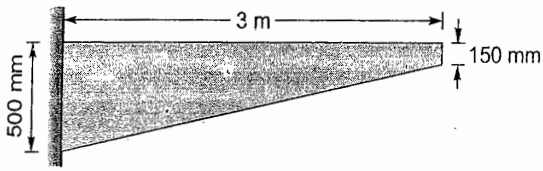


$$\text{Average depth of beam} = \frac{500+150}{2} = 325 \text{ mm (For purpose of load calculation)}$$

$\therefore$ Self weight of beam = 0.3 × 0.325 × 25 = 2.4375 kN/m = 2.44 kN/m

$\therefore$ Total load = 15 + 2.44 = 17.44 kN/m

$\therefore$ Factored load, $w = 1.5 \times 17.44 = 26.16$ kN/m

$\therefore$ Factored moment $M = 26.16 \times 3 \times \frac{3}{2} = 117.72$ kN/m

Let M25 concrete and Fe500 steel are used.

For Fe500 $M_{u\,lim} = 0.133\, f_{ck} bd^2$

$\Rightarrow$ $117.72 \times 10^6 = 0.133\,(25)\,(300)\, d^2$

$\Rightarrow$ $d = 343.53$ mm

But effective depth available (assuming 20 mm clear cover and 20 mm dia. bars with 8 mm stirrups)

$$= 500 - 20 - 8 - \frac{20}{2} = 462 \text{ mm} > 343.53 \text{ mm} \qquad \text{(OK)}$$

Thus depth of beam povided at the section of maximum moment is adequate.

**Reinforcement required:**

$$\frac{p_t}{100} = \frac{A_{st}}{bd} = \frac{f_{ck}}{2f_y}\left[1 - \sqrt{1 - 4.598\frac{R}{f_{ck}}}\right]$$

$$\text{where } R = \frac{M}{bd^2} = \frac{117.72 \times 10^6}{300 \times 462^2} = 1.838 \text{ N/mm}^2$$

$$= \frac{25}{2(500)}\left[1 - \sqrt{1.4.598 \times \frac{1.838}{25}}\right] = 0.0046598$$

$\therefore$ $p_t = 0.466\%$

$\Rightarrow$ $A_{st} = \frac{0.466}{100} \times 300 \times 462 = 645.876 \text{ mm}^2$

$\therefore$ No. of 20 mm dia. bars required

$$= \frac{645.876}{\frac{\pi}{4} \times 20^2} = 2.06 \simeq 3 \text{ nos. (say)}$$

Percentage of tension reinforcement provided

$$= \frac{3 \times \frac{\pi}{4} \times 20^2}{300 \times 462} \times 100 = 0.68\%$$

**Shear reinforcement design:**

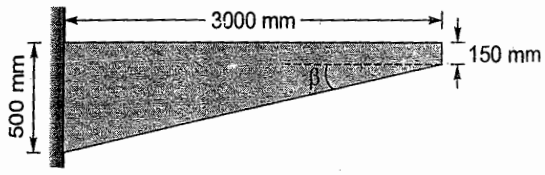


$$\tan\beta = \frac{500-150}{3000} = 0.1167$$

Factored shear force, $V = wl = 26.16 \times 3 = 78.48$ kN

$\therefore$ Nominal shear stress, $$\tau_v = \frac{V - \left(\frac{M}{d}\right)\tan\beta}{bd} = \frac{78.48 \times 10^3 - \frac{117.72 \times 10^6}{462}(0.1167)}{300 \times 462}$$

$$= 0.352 \text{ N/mm}^2$$

For M25 concrete and $p_t = 0.68\%$, design shear strength of concrete $(\gamma_c) = 0.553$ N/mm$^2$

Thus, $\tau_v < \tau_c$

However, $\tau_u > 0.5\tau_c$

and thus a minimum nominal shear reinforcement has to be provided i.e.,

$$\frac{A_{sv\,min}}{bs_v} \geq \frac{0.4}{0.87 f_y}$$

Using 2 legged 8 mm dia. stirrups,

$$A_{sv} = 2 \times \frac{\pi}{4} \times 8^2 = 100.53 \text{ mm}^2$$

$$\therefore \quad \frac{A_{sv\,min}}{bs_v} \geq \frac{0.4}{0.87 f_y}$$

$$\Rightarrow \quad s_v = \frac{2.175 f_y A_{sv\,min}}{b} = \frac{2.175(500)(100.53)}{300} = 364.42 \text{ mm c/c}$$

But $$s_v = \begin{cases} 0.75d = 0.75 \times 462 = 346.5 \text{ mm} \\ 300 \text{ mm} \end{cases} = 300 \text{ mm c/c}$$

$\therefore$ Provide 2 legged 8 mm dia. stirrups @ 280 mm c/c.

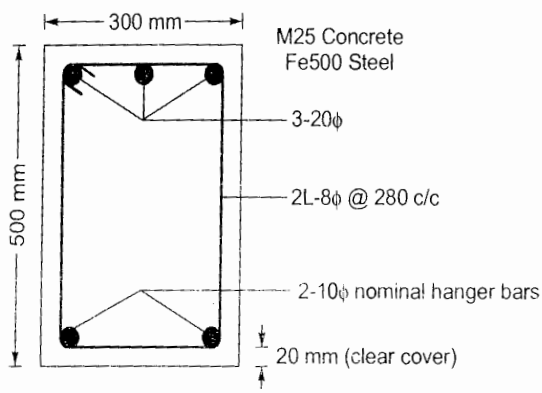


Reinforcement details at support section

**2.12 A simply supported beam of 4.5 m effective span is carrying a live load of 25 kN/m. The size of the beam has to be restricted to 250 mm × 380 mm depth. Design the beam for bending using limit state method. The design coefficients are $K = 0.138$, $\tau = 0.80$, $K_u = 0.479$. Use M20 grade concrete and Fe415 steel.**

**[SSC JE - 2011 : 30 Marks]**

**Solution:**

Effective span of beam, $l = 4.5$ m

Live load = 25 kN/m

Beam size = 250 × 380 mm

∴ Dead load of beam = 0.25 × 0.38 × 25 = 2.375 kN/m

∴ Total load = 25 + 2.375 = 27.375 kN/m

∴ Factored load ($w$) = 1.5 × 27.375 = 41.0625 kN/m = 41.06 kN/m (say)

∴ Factored moment for which beam is to be designed is

$$M = \frac{wl^2}{8} = \frac{41.06 \times 4.5^2}{8} = 103.9 \text{ kNm}$$

M20 concrete and Fe415 steel are to be used.

For Fe415, limiting moment of resistance is,

$$M_{u\,lim} = 0.138\, f_{ck}\, bd^2$$

Let effective cover = 50 mm

∴ Effective depth of beam ($d$) = 380 – 50 = 330 mm

∴ $M_{u\,lim} = 0.138\, f_{ck}\, bd^2$

$= 0.138\,(20)\,(250)\,(330)^2$ Nmm

$= 75.141$ kNm

Thus, $M > M_{u\,lim}$

⇒ Doubly reinforced section is required.

$$p_{t\,lim} = 41.61\left(\frac{f_{ck}}{f_y}\right)\left(\frac{x_{u\,lim}}{d}\right) = 41.61\left(\frac{20}{415}\right)(0.479) = 0.961\%$$

∴ $$A_{st\,lim} = \frac{p_{t\,lim}}{100} bd = \frac{0.961}{100} \times 250 \times 330 = 792.825 \text{ mm}^2$$

Let 20 mm dia. bars are provided as compression reinforcement.

∴ $$d' = 25 \text{ (clear cover)} + 8 \text{ (stirrup)} + \frac{1}{2}(20) = 43 \text{ mm}$$

∴ $$\Delta A_{st} = \frac{(M - M_{u\,lim})}{0.87 f_y (d - d')} = \frac{(103.9 - 75.141)10^6}{0.87(415)(330 - 43)} = 277.54 \text{ mm}^2$$

∴ $$A_{st} = A_{st\,lim} + \Delta A_{st} = 792.825 + 277.54 = 1070.365 \text{ mm}^2$$

If three bars in tension zone are provided then diameter of bar required is given by,

$$3 \times \frac{\pi}{4} d^2 = A_{st}$$

⇒ $$d = \sqrt{\frac{1070.365 \times 4}{3\pi}} = 21.31 \text{ mm}$$

If four bars are provided then bar dia. required

$$= \sqrt{\frac{1070.365 \times 4}{4\pi}} = 18.46\text{mm} \simeq 20 \text{ mm (say)}$$

∴ Provide 4 nos. 20 mm dia. bars in tension zone.

∴ $$A_{st\,provided} = 4 \times \frac{\pi}{4} \times 20^2 = 1256.64 \text{ mm}^2$$

∴ $$\text{Actual effective depth } (d) = 380 - 25 \text{ (clear cover)} - 8 \text{ (stirrup)} - \frac{1}{2}(20)$$

$$= 337 \text{ mm} > 330 \text{ mm (assumed above)} \quad \text{(OK)}$$

Now, $$\frac{d'}{d} = \frac{43}{337} = 0.1276$$

∴ $$f_{sc} = 346.55 \text{ N/mm}^2$$

∴ $$A_{sc\,reqd.} = \frac{0.87 f_y \Delta A_{st}}{f_{sc} - 0.447 f_{ck}}$$

Now, $$A_{st\,lim\,prov.} = \frac{0.961}{100}(250)(337) = 809.64 \text{ mm}^2$$

∴ $$(\Delta A_{st})_{prov.} = A_{st\,provided} - A_{st\,lim\,prov.}$$

$$= 1256.64 - 809.64 = 447 \text{ mm}^2$$

∴ $$A_{sc\,reqd.} = \frac{0.87 f_y \Delta A_{st}}{f_{sc} - 0.447 f_{ck}} = \frac{0.87(415)(447)}{346.55 - 0.447(20)} = 478.03 \text{ mm}^2$$

∴ $$\text{No. of 20 mm dia. bars required} = \frac{478.03}{\frac{\pi}{4}(20)^2} = 1.5 \simeq 2 \text{ nos. (say)}$$

∴ Provide 2 nos. 20 mm dia. bars as compression reinforcement.

**Check for section not to become over-reinforced:**

For section not to become over-reinforced.

$$x_u \le x_{u\,lim}$$

Actual effective depth provided $(d) = 380 - 25 - 8 - \frac{1}{2}(20) = 337$ mm

∴ $$\frac{d'}{d} = \frac{43}{337} = 0.1276$$

∴ $$f_{sc} = 346.55 \text{ N/mm}^2$$

$$p_{t\,prov} = \frac{1256.64}{250 \times 337} \times 100 = 1.49\%$$

$$p_{c\,prov.} = \frac{2 \times \frac{\pi}{4} \times 20^2}{250 \times 337} \times 100 = 0.746\%$$

Minimum percentage of compression reinforcement required.

$$p_c^* = \frac{0.87 f_y (p_t - p_{t\,lim})}{f_{sc} - 0.447 f_{ck}} = \frac{0.87(415)(1.49 - 0.961)}{346.55 - 0.447(20)} = 0.566\%$$

Thus, $$p_c > p_c^*$$

⇒ Section is under-reinforced.

Check for deflection:

$\therefore \quad p_t = 1.49\%$ and $f_{st} = 0.58 \times 415 \times \dfrac{1070.365}{1256.64} = 205.02\ \text{N/mm}^2$

$\therefore \quad k_t = 0.99$

$p_c = 0.746\%$

$\Rightarrow \quad k_c = 1.199$

For simply supported beam, $\left(\dfrac{l}{d}\right)_{basic} = 20$

$$\therefore \quad \left(\frac{l}{d}\right)_{max} = \left(\frac{l}{d}\right)_{basic} k_t k_c$$

$$= 20\,(0.99)\,(1.199) = 23.74$$

$$\left(\frac{l}{d}\right)_{actual} = \frac{4500}{337} = 13.35 < 23.74 \text{ (OK)}$$

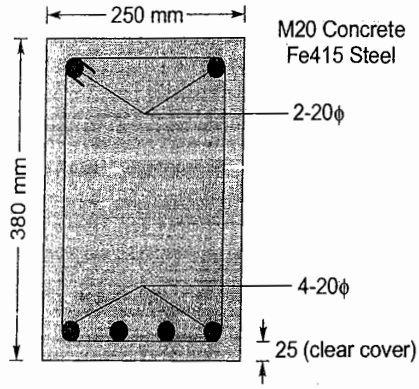

Reinforcement details

**2.13 Design a beam of 4.8 m span carrying a total load of 15 kN/m inclusive of self weight. The beam is laterally supported throughout.**

[SSC JE - 2011 : 30 Marks]

**Solution:**

Span of beam, $l = 4.8$ m

Total load the beam is required to carry including its self weight = 15 kN/m

$\therefore$ Factored load, $w = 1.5 \times 15 = 22.5$ kN/m

$\therefore$ Factored moment, $M = \dfrac{wl^2}{8} = \dfrac{22.5 \times 4.8^2}{8} = 64.8$ kNm

$\therefore$ Grade of concrete and grade of steel are not given.

$\therefore$ Assume grade of concrete as M20 and grade of steel as Fe415.

**Beam depth required:**

For Fe415, ultimate moment of resistance,

$$M_{u\,lim} = 0.138\, f_{ck}\, bd^2$$

Let width of beam, $b = 300$ mm

$\therefore \quad M_{u\,lim} = 0.138\, f_{ck}\, bd^2$

$\Rightarrow \quad 64.8 \times 10^6 = 0.138\,(20)\,(300)\, d^2$

$\Rightarrow \quad d = 279.75$ mm

This effective depth is coming out to be less than width of beam.

$\Rightarrow$ Beam width can be reduced.

Let revised beam width, $b = 250$ mm

$\therefore \quad M_{u\,lim} = 0.138\, f_{ck}\, bd^2$

$\Rightarrow \quad 64.8 \times 10^6 = 0.138\,(20)\,(250)\, d^2$

$\Rightarrow \quad d = 306.45$ mm

Let clear cover = 25 mm

Dia. of shear stirrups = 8 mm

Dia. of reinforcing bars = 20 mm

∴ Overall beam depth required,

$$D = 306.45 + \frac{1}{2}(20) + 8 + 20 = 344.45 \text{ mm}$$

Adopt, $D = 350 \text{ mm}$

∴ $$d = 350 - 20 - 8 - \frac{1}{2}(20) = 312 \text{ mm} > 306.45 \text{ mm} \quad \text{(OK)}$$

**Reinforcement required:**

$$\frac{p_t}{100} = \frac{A_{st}}{bd} = \frac{0.5 f_{ck}}{f_y}\left[1 - \sqrt{1 - 4.598\frac{R}{f_{ck}}}\right]$$

where $R = \frac{M}{bd^2} = \frac{64.8 \times 10^6}{250 \times 312^2} = 2.663 \text{ N/mm}^2$

$$= \frac{0.5(20)}{415}\left[1 - \sqrt{1 - 4.598 \times \frac{2.663}{20}}\right]$$

⇒ $p_t = 0.909\%$

∴ $$A_{st} = \frac{p_t}{100}bd = \frac{0.909}{100}(250)(312) = 709.02 \text{ mm}^2$$

∴ No. of 20 mm dia. bars required

$$= \frac{709.02}{\frac{\pi}{4}(20)^2} = 2.3 \simeq 3 \text{ nos. (say)}$$

Percentage of reinforcement provided

$$p_{t_{prov}} = \frac{3 \times \frac{\pi}{4} \times 20^2}{250 \times 312} \times 100 = 1.208\%$$

Limiting percentage steel $$p_{t_{lim}} = 41.61\left(\frac{f_{ck}}{f_y}\right)\left(\frac{x_{u\,lim}}{d}\right) = 41.61\left(\frac{20}{415}\right)(0.48) = 0.963\%$$

Thus, $p_{t_{prov}} > p_{t_{lim}}$

⇒ Section is over-reinforced.

Instead of revising the beam-section, increase the grade of concrete.

Let M25 concrete is used.

∴ $$\frac{p_t}{100} = \frac{A_{st}}{bd} = \frac{0.5(25)}{415}\left[1 - \sqrt{1 - 4.598 \times \frac{2.663}{25}}\right]$$

⇒ $p_t = 0.861\%$

⇒ $$A_{st} = \frac{0.861}{100}(250)(312) = 671.58 \text{ mm}^2$$

$$p_{t_{lim}} = 41.61\left(\frac{25}{415}\right)(0.48) = 1.203\%$$

∴ No. of 16 mm dia. bars required

$$= \frac{671.58}{\frac{\pi}{4}(16)^2} = 3.34 \simeq 4 \text{ nos. (say)}$$

∴ Percentage reinforcement provided

$$p_{t_{prov}} = \frac{4 \times \frac{\pi}{4} \times 16^2}{250 \times 312} \times 100 = 1.03\% < 1.203\% \quad \text{(OK)}$$

**Design of shear reinforcement:**

Factored shear force, $V = \frac{wl}{2} = 22.5 \times \frac{4.8}{2} = 54$ kN

Percentage reinforcement provided,

$$p_{t_{prov}} = 1.03\%$$

Nominal shear stress, $\tau_v = \frac{V}{bd} = \frac{54 \times 1000}{250 \times 312} = 0.692$ N/mm$^2$

For M25 concrete and 1.03% steel, design shear strength of concrete (Table 19 of IS 456 : 200),

$$\tau_c = 0.6479 \text{ N/mm}^2$$

ALTERNATIVELY:

$\tau_c$ can be computed as,

$$\tau_c = 0.85\sqrt{0.8f_{ck}}\,\frac{\left(\sqrt{5\beta+1}-1\right)}{6\beta}$$

where, $\beta = \begin{bmatrix} \frac{0.8f_{ck}}{6.89p_t} \\ 1 \end{bmatrix}$ (whichever is more)

$$= \begin{bmatrix} \frac{0.8 \times 25}{6.89 \times 1.03} \\ 1 \end{bmatrix} = \begin{bmatrix} 2.818 \\ 1 \end{bmatrix} = 2.818$$

∴ $$\tau_c = 0.85\sqrt{0.8(25)}\,\frac{\left(\sqrt{5(2.818)+1}-1\right)}{6(2.818)}$$

$$= 0.649 \text{ N/mm}^2$$

(which is almost same as the value taken from IS 456 : 2000)

∴ Shear reinforcement needs to be designed for the shear force of

$$V_{us} = (\tau_v - \tau_c)\,bd$$

$$= (0.692 - 0.6479)\,250(312) \text{ N}$$

$$= 3.4398 \text{ kN} \simeq 3.44 \text{ kN}$$

Using 2 legged 8 mm dia. stirrups,

$$A_{sv} = 2 \times \frac{\pi}{4} \times 8^2 = 100.53 \text{ mm}^2$$

∴ Spacing of shear stirrups is given by

$$V_{us} = 0.87 f_y A_{sv} \frac{d}{s_v}$$

⇒ $$3.44 \times 10^3 = 0.87(415)(100.53)\frac{312}{s_v}$$

⇒ $$s_v = 3291.99 \text{ mm}$$

But $$s_v \le \begin{bmatrix} 0.75d \\ 300 \text{ mm} \end{bmatrix} = \begin{bmatrix} 0.75(312)\text{mm} \\ 300 \text{ mm} \end{bmatrix} = \begin{bmatrix} 234 \text{ mm} \\ 300 \text{ mm} \end{bmatrix} = 234 \text{ mm}$$

∴ Provide spacing $s_v = 200$ mm (say) < 234 mm

Also minimum shear reinforcement is given by,

$$\frac{A_{sv\,min}}{bs_v} \ge \frac{0.4}{0.87 f_y}$$

⇒ $$s_v = \frac{2.175 f_y A_{sv}}{b} = \frac{2.175(415)(100.53)}{250} = 362.96 \text{ mm}$$

∴ Provided 2 legged 8 mm dia. stirrups @ 200 mm c/c

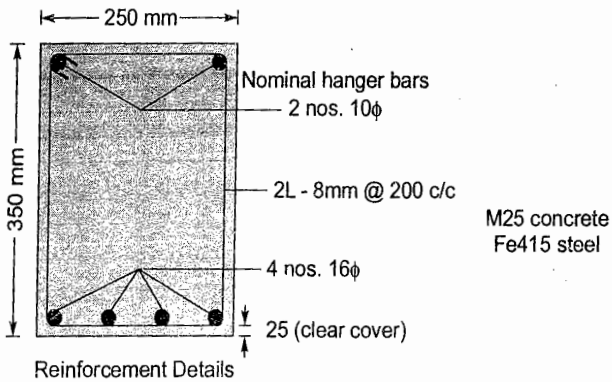

Reinforcement Details

2.14 A singly reinforced beam having a width of 250 mm is reinforced with 3 bars of 16 mm diameter at an effective depth of 400 mm. If M20 grade concrete and Fe415 HYSD bars are used, compute for the section.

(i) Working moment of resistance.

(ii) Ultimate moment of resistance.

[SSC JE - 2012 : 15 + 15 = 30 Marks]

**Solution:**

Width of beam, $b = 250$ mm

Area of steel reinfocement, $A_{st} = 3$ nos. – 16 ϕ

$$= 3 \times \frac{\pi}{4} \times 16^2 = 603.2 \text{ mm}^2$$

Effective depth of beam, $d = 400$ mm

M20 concrete and Fe415 steel are used.

Percentage reinforcement provided,

$$p_t = \frac{A_{st}}{bd} \times 100 = \frac{603.2}{250 \times 400} \times 100 = 0.603\%$$

Limiting percentage of steel reinforcement,

$$p_{t\,lim} = 41.61\left(\frac{f_{ck}}{f_y}\right)\left(\frac{x_{u\,lim}}{d}\right) = 41.61\left(\frac{20}{415}\right)(0.48) = 0.963\%$$

∴ $p_t < p_{t\,lim}$

⇒ Section is under-reinforced and $f_{st} = 0.87 f_y$ and $x_u < x_{u\,lim}$.

∴ Moment of resistance of the beam section is given by,

$$M = 0.87 f_y A_{st} (d - 0.42 x_u)$$

Depth of neutral axis ($x_u$) can be computed as

$$C = T$$

$$\Rightarrow \quad 0.362 f_{ck} b x_u = 0.87 f_y A_{st}$$

$$\Rightarrow \quad x_u = \frac{0.87(415)(603.2)}{0.362(20)(250)} = 120.32 \text{ mm}$$

$$\therefore \quad M = 0.87 f_y A_{st} (d - 0.42 x_u)$$

$$= 0.87 (415) (603.2) (400 - 0.42 \times 120.32) = 76.11 \text{ kNm}$$

∴ Working moment of resistance

$$= \frac{76.11}{1.5} = 50.74 \text{ kNm}$$

The beam section reaches its ultimate moment of resistance when $x_u = x_{u\,\text{lim}}$

For Fe415, ultimate moment of resistance is given by

$$M_{u\,\text{lim}} = 0.138 f_{ck} bd^2$$

$$= 0.138 (20) (250) (400)^2 \text{ Nmm}$$

$$= 110.4 \text{ kNm}$$

**2.15 Design a square column section subjected to concentrated load of 1000 kN at service. Consider concrete grade of M25 and steel grade Fe415.**

**[SSC JE - 2012 : 10 Marks]**

**Solution:**

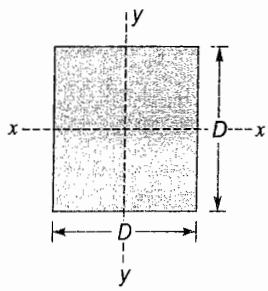


Concentrated service load = 1000 kN

∴ Factored load, $P = 1.5 \times 1000 = 1500$ kN

M25 concrete and Fe415 are to be used.

∵ Column length is not given.

∴ It is assumed that $e_{x\,\min}$ and $e_{y\,\min}$ both are less than 0.05 $D$ so that the following expression is applicable i.e.,

$$P = 0.4 f_{ck} A_c + 0.67 f_y A_s$$

Let side of square column is '$D$' and 1% steel is provided.

∴ Area of steel reinforcement,

$$A_s = 1\% \text{ of gross column area}$$

$$= 1\% \text{ of } A_g$$

$$= 0.01 D^2$$

∴ Area of concrete, $A_c = A_g - A_s = D^2 - 0.01 D^2 = 0.99 D^2$

$$\therefore \quad P = 0.4 f_{ck} A_c + 0.67 f_y A_s$$

$$\Rightarrow \quad 1500 \times 1000 = 0.4 (25) (0.99 D^2) + 0.67 (415) (0.01 D^2)$$

$$\Rightarrow \quad D = 343.9 \text{ mm}$$

Adopt $D = 350$ mm

∴ Area of steel, $A_s = 1\%$ of $A_g = 0.01 (350)^2 = 1225$ mm$^2$

∴ No. of 25 mm dia. bars required $= \dfrac{1225}{\frac{\pi}{4}(25)^2} = 2.5$

No. of 20 mm dia. bars required = $\dfrac{1225}{\frac{\pi}{4}(20)^2} = 3.89$ which is close to 4.

∴ Provide 4 nos. – 20 mm dia. bars at the corners of the square column.

**Design of column ties:**

Tie diameter, $\phi_t \geq \begin{bmatrix} \phi_{main}/4 \\ 6 \text{ mm} \end{bmatrix} = \begin{bmatrix} 20/4 \text{ mm} \\ 6 \text{ mm} \end{bmatrix} = \begin{bmatrix} 5 \text{ mm} \\ 6 \text{ mm} \end{bmatrix} = 6 \text{ mm}$

Tie spacing, $s_t \leq \begin{bmatrix} D \\ 16 \cdot \phi_{main} \\ 300 \text{ mm} \end{bmatrix} = \begin{bmatrix} 350 \text{ mm} \\ 16 \times 20 = 320 \text{ mm} \\ 300 \text{ mm} \end{bmatrix} = 300 \text{ mm}$

∴ Provide 6 mm dia. ties @ 250 mm c/c with a clear cover of 40 mm.

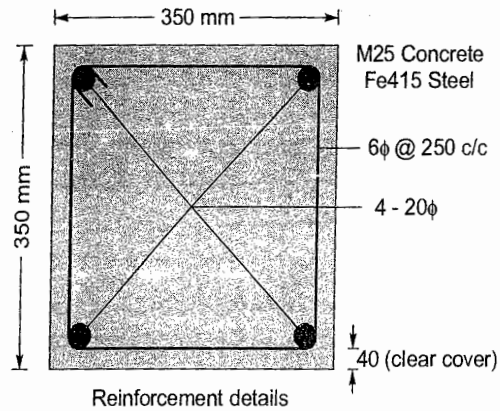

Reinforcement details

**2.16 Design a cantilever beam which projects beyond the fixed end by 3 m. The superimposed load on it is 10 kN/m. Use M20 grade ($\sigma_{cbc}$ = 7 N/mm²) of concrete and Fe415 steel ($\sigma_{st}$ = 230 N/mm²). Assume moderate exposure conditions.**

[SSC JE - 2013 : 30 Marks]

**Solution:**

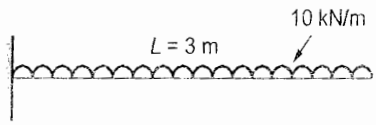


$\sigma_{cbc} = 7 \text{ N/mm}^2$

$\sigma_{st} = 230 \text{ N/mm}^2$

For cantilever beam, $\dfrac{L}{d} \leq 7$

⇒ $d \geq \dfrac{L}{7} = \dfrac{3000}{7} = 428.57 \text{ mm}$

Let overall depth of beam, $D$ = 500 mm

Effective cover = 50 mm

∴ Effective depth, $d$ = 500 – 50 = 450 mm

Let width of beam, $b$ = 300 mm

∴ Self-weight of beam = 0.3 × 0.5 × 25 = 3.75 kN/m

Superimposed load = 10 kN/m

∴ Total load, $w$ = 3.75 + 10 = 13.75 kN/m

Bending moment, $M = \dfrac{WL^2}{2} = \dfrac{13.75 \times 3^2}{2} = 61.875 \text{ kNm}$

For M20 concrete, $\sigma_{cbc} = 7\ N/mm^2$

For Fe415 steel, $\sigma_{st} = 230\ N/mm^2$

$m = 13.33$

$Q = 0.91$

$j = 0.9$

$\therefore$ Modulur ratio, $m = Qbd^2$

$\Rightarrow$ $61.875 \times 10^6 = 0.91\,(300)\,d^2$

$\Rightarrow$ $d = 476\ mm > 450\ mm$

$\therefore$ $D = 476 + 50 = 526\ mm$

$D = 530$ m so that $d = 530 - 50 = 480\ mm > 476\ mm$

$\therefore$ Revised self-weight of beam $= 0.3 \times 0.53 \times 25 = 3.975\ kN/m$

Superimposed load $= 10\ kN/m$

$\therefore$ Revised total load $= 13.975\ kN/m$

$\therefore$ Revised bending moment, $M = 13.975 \times \dfrac{3^2}{2} = 62.8875\ kN/m$

$\therefore$ $M = Qbd^2$

$\Rightarrow$ $62.8875 \times 10^6 = 0.91\,(300)\,d^2$

$\Rightarrow$ $d = 479.96\ mm \simeq 480\ mm$ (OK)

**Tension reinforcement:**

Area of tension reinforcement, $A_{st} = \dfrac{M}{\sigma_{st} jd} = \dfrac{62.8875 \times 10^6}{230 \times 0.9 \times 480} = 632.925\ mm^2$

Using 20 mm diameter bars, number of bars required $= \dfrac{632.925}{\frac{\pi}{4}(20)^2} = 2.01$

Using 16 mm diameter bars, number of bars required $= \dfrac{632.925}{\frac{\pi}{4}(16)^2} = 3.15 \simeq 4$ nos. (say)

$\therefore$ Provide 4 nos. 16 mm $\phi$ diameter bars.

**Shear reinforcement:**

Nominal shear stress, $\tau_v = \dfrac{V}{bd} = \dfrac{wl}{bd} = \dfrac{13.975 \times 3 \times 10^3}{300 \times 480} = 0.29\ N/mm^2$

Percentage tension reinforcement provided

$$p_t = \frac{4 \times \frac{\pi}{4} \times 16^2}{300 \times 480} \times 100 = 0.56\%$$

For 0.56% steel and M20 concrete, shear strength of concrete, $\tau_c = 0.3\ N/mm^2$

$\because$ $\tau_v \simeq \tau_c$

$\therefore$ Provide nominal shear reinforcement

Using 2-legged, 6 mm diameter bars as shear reinforcement, spacing required,

$$s_v = \frac{\sigma_{st} A_{sv}}{0.4b} = \frac{230 \times \frac{\pi}{4} \times 6^2 \times 2}{0.4 \times 300} = 108.38\ mm$$

∴ Provide 2-legged 6 mm diameter bars @ 100 mm/cc

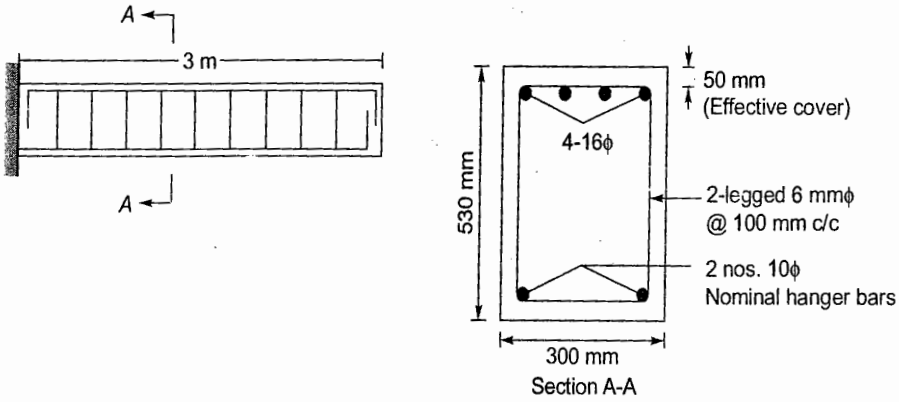


**Reinforcement details**

**2.17 A rectangular, singly reinforced beam 300 mm wide and 500 mm effective depth is used as a simply supported beam over an effective span of 6 m. The reinforcement consists of 4 bars of 20 mm dia. If the beam carries a load of 12 kN/m (inclusive of self weight), determine the stress developed in concrete and steel. Take $m$ = 19.**

[SSC JE - 2014 : 30 Marks]

**Solution:**

In this question, concrete grade and steel grade are not given. Therefore it is assumed that concrete is of grade M15 and steel of grade Fe415.

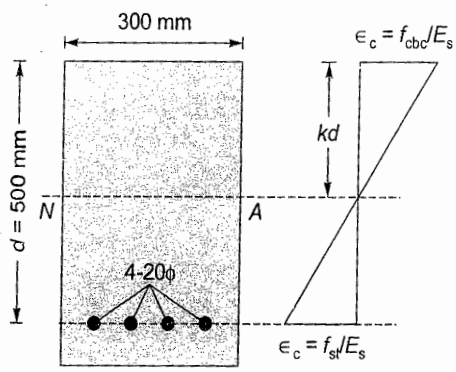


Given $m = 19$

$$\Rightarrow \quad \frac{280}{3\sigma_{cbc}} = 19$$

$$\Rightarrow \quad \sigma_{cbc} = \frac{280}{3 \times 19} = 4.9 \text{ N/m}^2 \approx 5 \text{ N/mm}^2$$

which corresponds to M15 concrete.

For Fe415, $\sigma_{st} = 230 \text{ N/mm}^2$

$$\text{Percentage tension steel, } p_t = \frac{A_{st}}{bd} \times 100 = \frac{4 \times \frac{\pi}{4} \times 20^2}{300 \times 500} \times 100 = 0.838\%$$

Let depth of neutral axis = $kd$ (from top of compression fibre)

$$\text{where,} \quad k = -\left(\frac{p_t m}{100}\right) + \left[\left(\frac{p_t m}{100}\right)^2 + \left(\frac{p_t m}{50}\right)\right]^{1/2}$$

$$= -\left(\frac{0.838 \times 19}{100}\right) + \left[\left(\frac{0.838 \times 19}{100}\right)^2 + \left(\frac{0.838 \times 19}{50}\right)\right]^{1/2} = 0.427$$

Neutral axis depth factor for balanced section = $k_b$

$$= \frac{93.33}{\sigma_{st} + 93.33} = \frac{93.33}{230 + 93.33} = 0.289$$

∴ $k > k_b$

⇒ Section is over-reinforced.

In this case, concrete will reach to its permissible value i.e., $f_{cbc} = \sigma_{cbc} = 5 \text{ N/mm}^2$

However stress in steel will not reach to its yield stress value i.e., $f_{st} < \sigma_{st}$ (= 230 N/mm²)

# Unit XI Steel Design

## 1. Structural Fasteners

1.1 A member of a truss ISA 125 × 95 is used to carry a tensile load of 180 kN. The angle section is connected to a 10 mm thick gusset plate, through the longer leg, by five power driven shop rivets, as shown in figure. Select a suitable angle thickness and rivet diameter.

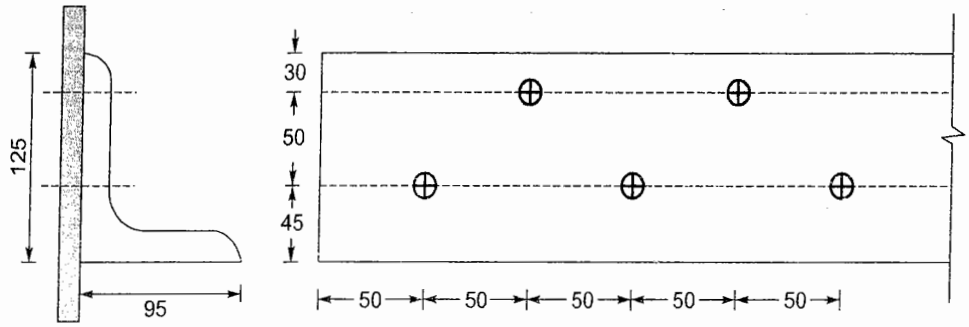


10 mm thick gusset plate

(All dimensions are in mm)

[SSC JE - 2005 : 15 Marks]

**Solution:**

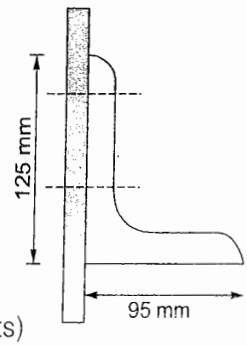


Let, $t$ = Angle thickness (in mm)

$d$ = Diameter of rivet hole (in mm)

Tensile load, $P = 180$ kN

Permissible tensile stress, $\sigma_t = 0.6\, f_y = 0.6 \times 250 = 150$ N/mm$^2$

∴ Net area required, $A_n = \dfrac{P}{\sigma_t} = \dfrac{180 \times 10^3}{150} = 1200$ mm$^2$

Trial-1

Let, $t$ = 10 mm and d = 21.5 mm (for 20 mm dia. rivets)

∴ Area of connected leg, $A_1 = \left(125 - 21.5 - \dfrac{10}{2}\right)10 = 985$ mm$^2$

Area of outstanding leg, $A_2 = \left(95 - \dfrac{10}{2}\right)10 = 900$ mm$^2$

∴ $k = \dfrac{3A_1}{3A_1 + A_2} = \dfrac{3(985)}{3(985) + 900} = 0.7665$

∴ Net area available $= A_1 + kA_2$

$= 985 + 0.7665\,(900)$

$= 1674.85$ mm$^2 > 1200$ mm$^2$ (OK)

Trial-2

Let $t$ = 10 mm and d = 19.5 mm (for 18 mm dia. rivets)

∴ $A_1 = \left(125 - 19.5 - \dfrac{10}{2}\right)10 = 1005$ mm$^2$

$$A_2 = \left(95 - \frac{10}{2}\right)10 = 900 \text{ mm}^2$$

$$\therefore \quad k = \frac{3A_1}{3A_1 + A_2} = \frac{3(1005)}{3(1005) + 900} = 0.7701$$

$$\therefore \quad A_{net} = A_1 + kA_2$$

$$= 1005 + 0.7701 \times 900$$

$$= 1698.09 \text{ mm}^2 > 1200 \text{ mm}^2 \quad \text{(OK)}$$

**Trial-3**

Let, $t = 8$ mm and $d = 19.5$ mm

$$\therefore \quad A_1 = \left(125 - 19.5 - \frac{8}{2}\right)8 = 812 \text{ mm}^2$$

$$A_2 = \left(95 - \frac{8}{2}\right)8 = 728 \text{ mm}^2$$

$$\therefore \quad k = \frac{3A_1}{3A_1 + A_2} = \frac{3(812)}{3(812) + 728} = 0.7699$$

$$\therefore \quad A_{net} = A_1 + kA_2 = 1372.49 \text{ mm}^2 > 1200 \text{ mm}^2 \quad \text{(OK)}$$

Thus a large number of combinations of angle thickness and rivet diameter are possible.

For economy adopt $t = 8$ mm

and $d = 19.5$ mm i.e., dia. of rivet = 18 mm

1.2 **Find the maximum load *P* that can be carried by the bracket connection shown in figure, if 6-20 mm diameter power driven shop rivets are used.**

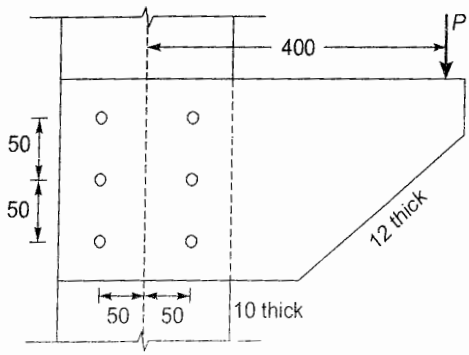


(All dimensions are in mm)

[SSC JE - 2005 : 18 Marks]

Solution:

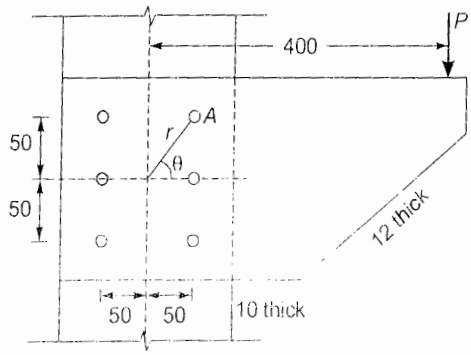


(All dimensions in mm)

Eccentricity of load ($e$) = 400 mm

Total no. of rivets ($n$) = 6

Nominal dia. of rivet = 20 mm

∴ Gross dia. of rivet = 20 + 1.5 = 21.5 mm

According to IS 800 : 1984 maximum permissible shear stress in power driven shop rivets = 100 MPa and in bearing = 300 MPa.

Shear strength of rivet, $P_s = \frac{\pi}{4}(21.5)^2(100)\ \text{N} = 36.31\ \text{kN}$

Bearing strength of rivet, $P_b = dt(300) = 21.5\,(10)\,300\ \text{N} = 64.5\ \text{kN}$

(Out of 10 mm and 12 mm thickness, lesser will be the governing thickness)

∴ Rivet value, $R_V = 36.31\ \text{kN}$

Rivet $A$ will be highly stressed.

Direct load on rivet $A$, $F_1 = \frac{P}{n} = \frac{P}{6}$

Load on rivet $A$ due to twisting moment

$$F_2 = \frac{Per}{\Sigma r^2}$$

where, $r = \sqrt{50^2 + 50^2} = 50\sqrt{2}\ \text{mm}$

and $\Sigma r^2 = 4\left(50\sqrt{2}\right)^2 + 2(50)^2 = 25000\ \text{mm}^2$

∴ $$F_2 = \frac{P(400)50\sqrt{2}}{25000} = 0.8\sqrt{2}P$$

$$\cos\theta = \frac{50}{r} = \frac{50}{50\sqrt{2}} = \frac{1}{\sqrt{2}}$$

∴ Resultant force on rivet $A$, $F = \sqrt{F_1^2 + F_2^2 + 2F_1F_2\cos\theta}$

$$= \sqrt{\left(\frac{P}{6}\right)^2 + \left(0.8\sqrt{2}P\right)^2 + 2\left(\frac{P}{6}\right)\left(0.8\sqrt{2}P\right)\left(\frac{1}{\sqrt{2}}\right)}$$

$$= 1.2548\,P$$

But $F \le R_v$

⇒ $1.2548\,P \le 36.31\ \text{kN}$

⇒ $P \le 28.94\ \text{kN}$

∴ Maximum load ($P$) = 28.94 kN ≃ 28 kN (say)

1.3 The bracket shown in figure consists of pair of mild steel plates riveted to the flange of 305 mm × 152 mm I-column. If the resultant force on the critical rivet is limited to 45 kN, determine the load $P$, the bracket can support.

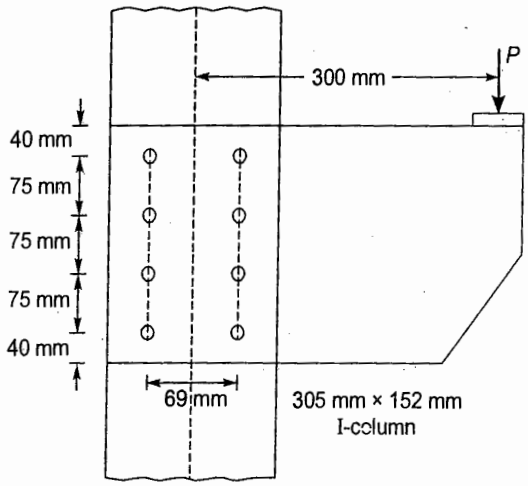


[SSC JE - 2007 : 15 Marks]

Solution:

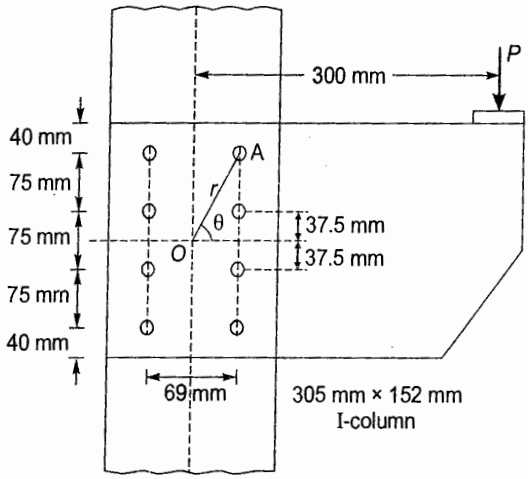


Eccentricity of load ($e$) = 300 mm

Highly stressed rivet will be rivet $A$ located closest to the load ($P$)

$$r = \sqrt{\left(\frac{69}{2}\right)^2 + \left(75 + \frac{75}{2}\right)^2} = 117.67 \text{ mm}$$

Total no. of rivets, $n = 8$

$\therefore$ Direct load on each rivet, $F_1 = \frac{P}{n} = \frac{P}{8}$

Load on rivet A due to twisting moment

$$F_2 = \frac{Per}{\Sigma r^2} = \frac{P(300)(117.67)}{\Sigma r^2}$$

Now, $\Sigma r^2 = 4(117.67)^2 + 4(37.5^2 + 34.5^2) = 65770.92 \text{ mm}^2$

$\therefore$ $$F_2 = \frac{P(300)(117.67)}{65770.92} = 0.5367\,P$$

$\therefore$ Resultant force on rivet $A$, $F = \sqrt{F_1^2 + F_2^2 + 2F_1F_2\cos\theta}$

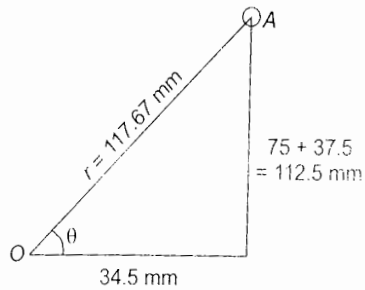


$$\cos\theta = \frac{34.5}{117.67} = 0.2932$$

$$\therefore \quad F = \sqrt{\left(\frac{P}{8}\right)^2 + (0.5367P)^2 + 2\left(\frac{P}{8}\right)(0.5367P)(0.2932)} = 0.5857\,P$$

Given resultant force on critical rivet is limited to 45 kN

$\therefore \quad F \le 45$ kN

$\Rightarrow \quad 0.5857\,P \le 45$

$\Rightarrow \quad P \le 76.83$ kN

Now the bracket consists of a pair of mild steel plates.

$\therefore$ Maximum load that the bracket can carry

$= 2 \times 76.83 = 153.66$ kN $\simeq 153$ kN (say)

**1.4 Calculate the size of the weld required for the welded bracket loaded as shown in figure.**

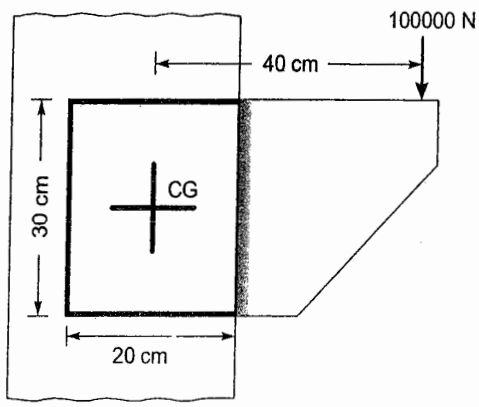


**[SSC JE - 2007 : 15 Marks]**

**Solution:**

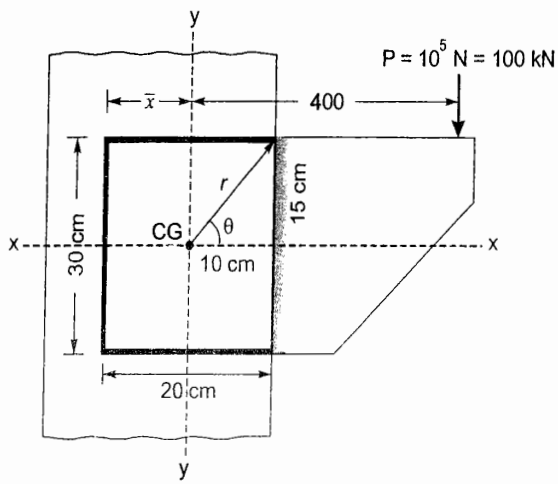


Let $\quad t$ = throat thickness of weld.

$\because$ Welding is done on all the four edges and thus CG of weld groups will lie in the middle i.e.,

$$\bar{x} = \frac{200}{2} = 100 \text{ mm}$$

Moment of inertia about $x$-$x$, $\quad I_{xx} = 2 \times \frac{t \times 300^3}{12} + 2\left[\frac{200 \times t^3}{12} + 200t(150)^2\right]$

$= 4.5\,t \times 10^6 + 9\,t \times 10^6$

(Ignoring term containing $t^3$ as it will be very small)

$= 13.5\,t \times 10^6$ mm$^4$

Moment of inertia about *y-y*, $I_{yy} = 2\left[300 \times \frac{t^3}{12} + 300t(100)^2\right] + 2 \times t \times \frac{200^3}{12}$

$= 6\,t \times 10^6 + 1.33\,t \times 10^6$

$= 7.33\,t \times 10^6 \text{ mm}^4$

(Ignoring term containing $t^3$ as it will be very small)

∴ Polar moment of inertia, $J = I_{xx} + I_{yy} = 20.83\,t \times 10^6 \text{ mm}^4$

$r = \sqrt{100^2 + 150^2} = 180.28 \text{ mm}$

$\cos\theta = \frac{100}{180.28} = 0.5547$

Direct shear stress, $\tau_{V_{f_1}} = \frac{100 \times 10^3}{2(200+300)t} = \frac{100}{t} \text{ N/mm}^2$

Shear stress due to twisting moment,

$$\tau_{V_{f_2}} = \frac{T}{J} r = \frac{100 \times 10^3 (400)}{20.83t \times 10^6} \times 180.28 = \frac{346.19}{t}$$

∴ Resultant stress $(\tau) = \sqrt{\tau_{V_{f_1}}^2 + \tau_{V_{f_2}}^2 + 2\tau_{V_{f_1}}\tau_{V_{f_2}}\cos\theta}$

$$= \sqrt{\left(\frac{100}{t}\right)^2 + \left(\frac{346.19}{t}\right)^2 + 2\left(\frac{100}{t}\right)\left(\frac{346.19}{t}\right)0.5547}$$

$$= \frac{410.19}{t} \text{ N/mm}^2$$

But $\tau \le 108 \text{ N/mm}^2$

⇒ $\frac{410.19}{t} \le 108$

⇒ $t \ge 3.8 \text{ mm}$

∴ Minimum size of weld $(s) = \frac{t}{0.7} = \frac{3.8}{0.7} = 5.43 \text{ mm} \simeq 6 \text{ mm}$

∴ Provide fillet weld of 6 mm size.

1.5 Find the suitable pitch for single riveted lap joint for plates 1 cm thick, if $\sigma_t = 150 \text{ N/mm}^2$, $\sigma_s = 100 \text{ N/mm}^2$ and $\sigma_b = 300 \text{ N/mm}^2$

[SSC JE - 2008 : 12 Marks]

Solution:

Diameter of rivet using Unwin's formula $(\phi) = 6.01\sqrt{t} = 6.01\sqrt{10} = 19 \text{ mm} = 18 \text{ mm (say)}$

∴ Gross dia. of rivet, $d = 18 + 1.5 = 19.5 \text{ mm}$

Shear strength of rivet. $P_s = \frac{\pi}{4} d^2 \sigma_s = \frac{\pi}{4}(19.5)^2\, 100 \text{ N} = 29.86 \text{ kN}$

Bearing strength of rivet, $P_b = dt\sigma_b = (19.5)\,10\,(300) \text{ N} = 58.5 \text{ kN}$

∴ Rivet value, $R_v$ = 29.86 kN = Strength of rivet per pitch length

Tearing strength of plate, $P_t = (s - d)\, t\sigma_t$

$= (s - 19.5)\, 10\, (150)$ N

$= 1500\,(s - 19.5)$ N

Equating strength of rivet per pitch length with tearing strength of plate will give the most economical pitch.

∴ $1500\,(s - 19.5) = 29.86 \times 10^3$

⇒ $s = 39.41$ mm $\simeq$ 40 mm

But pitch $\not< 2.5\,\phi = 2.5\,(18) = 45$ mm

∴ Provide pitch of 45 mm using 18 mm diameter rivets.

**1.6 Calculate the maximum load that the bracket shown in figure can carry if the size of the weld on flange is 8 mm and that on the web is 5 mm. The allowable shear stress is 102.5 N/mm².**

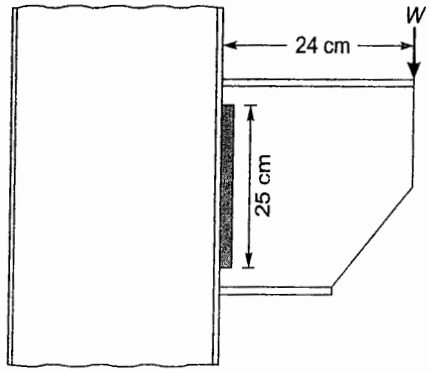


**[SSC JE - 2008 : 18 Marks]**

**Solution:**

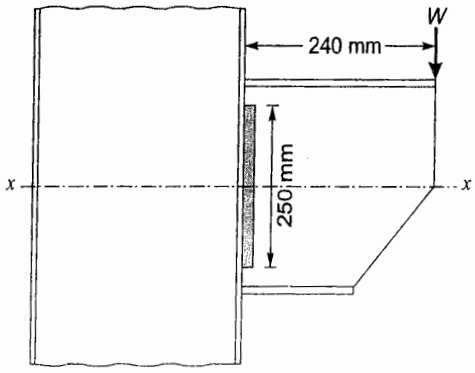


Size of weld on flange = 8 mm

Size of weld on web = 5 mm

∴ Effective throat thickness of weld

$t = 0.7 \times$ (lesser weld size)

$= 0.7(5) = 3.5$ mm

∴ Moment of inertia about $x$-$x$,

$$I_{xx} \text{ of weld} = 2 \times 3.5 \times \frac{250^3}{12} = 9.115 \times 10^6 \text{ mm}^4$$

$$\text{Direct shear stress in the weld} = \frac{W}{\text{Area of weld}} = \frac{W}{2 \times 250 \times 3.5} = \frac{W}{1750} \text{ N/mm}^2$$

Shear stress in weld due to moment $= \frac{6M}{td^2} = \frac{6(W)(240)}{2\times3.5\times250^2} = \frac{W}{303.8}$ N/mm$^2$

$\therefore$ Combined resultant stress $= \sqrt{\left(\frac{W}{1750}\right)^2 + \left(\frac{W}{303.8}\right)^2}$

$= \frac{W}{299.323}$ N/mm$^2$ $\leq 102.5$ N/mm$^2$

$\therefore \quad \frac{W}{299.323} \leq 102.5$

$\Rightarrow \quad W \leq 102.5 \times 299.323$ N $= 30.68$ kN

$\therefore$ Maximum load ($W$) $= 30.68$ kN $\simeq 30.5$ kN (say)

**1.7 What are the advantages and disadvantages of welded joints?**

**[SSC JE - 2009 : 12 Marks]**

**Solution:**

**Advantages of welded joints:**

1. Welded joints are more economical than riveted or bolted joints because splice plates and rivets are not required.
2. Welded joints are more rigid than riveted joints. The cover plates, connecting angles etc. in riveted joints make the joint more flexible.
3. It is because of welding that now it is very easy to join tubular sections.
4. Due to fusion of two metal pieces, the structure obtained is continuous. Thus welded joints give better architectural appearance.
5. Welding process does not make large sound as compared to riveted joints and thus less noise pollution is there.
6. Because of the absence of splice plates, connecting angles etc, the drawing detailing also gets reduced there by saving in cost and time.
7. The efficiency of welded joint is more than that of riveted joint.

**Disadvantages of welded joints:**

1. More skilled personnel are required for making welds in the metal.
2. The inspection of welded joint is difficult and expensive.
3. The heat generated during the welding process may distort the connecting members.
4. Welded joints are more prone for brittle failure as compared to other joints.

1.8 Determine the maximum load in the rivets of the eccentric connection shown in figure.

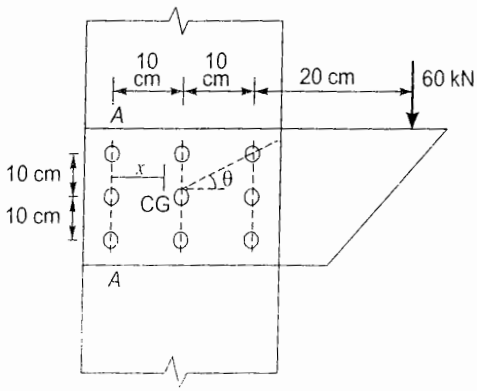


[SSC JE - 2009 : 18 Marks]

Solution:

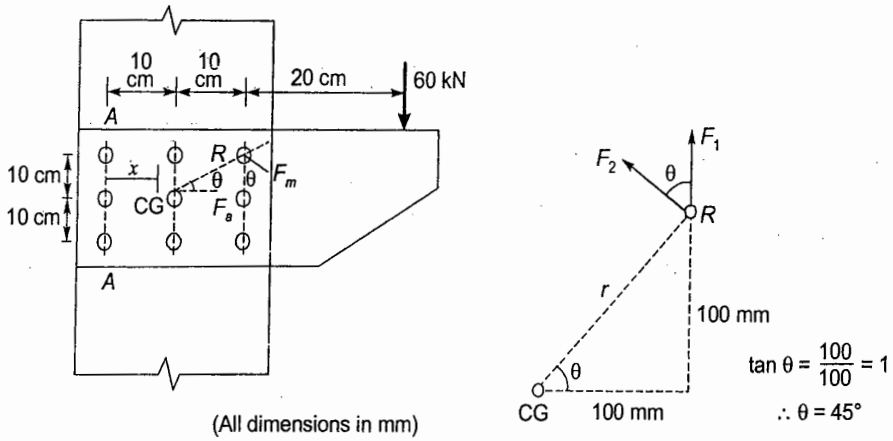


Eccentricity of load ($P$) from CG = $e$ = 200 + 100 = 300 mm

No. of rivets ($n$) =9

Load ($P$) = 60 kN

It is assumed that load is shared equally by all the rivets.

$\therefore$ Load coming on one rivet $(F_1) = \frac{P}{n} = \frac{60}{9} = 6.67$ kN

Rivet '$R$' will be highly stressed.

Load on rivet '$R$' due to moment i.e., eccentricity of axial load $(F_2) = \frac{Per}{\Sigma r^2}$

where, $r = \sqrt{100^2 + 100^2} = 100\sqrt{2}$ mm

$$\Sigma r^2 = 4\left(100\sqrt{2}\right)^2 + 2(100)^2 + 2(100)^2 + 0$$

$$= 120000 \text{ mm}^2$$

$$\therefore \quad F_2 = \frac{Per}{\Sigma r^2} = \frac{60(300)100\sqrt{2}}{120000} = 15\sqrt{2} \text{ kN}$$

$\therefore$ Resultant force on rivet '$R$' $= \sqrt{F_1^2 + F_2^2 + 2F_1F_2\cos\theta}$

$$= \sqrt{6.67^2 + \left(15\sqrt{2}\right)^2 + 2(6.67)15\sqrt{2}\cos 45°}$$

$$= 26.36 \text{ kN}$$

$\therefore$ Maximum force/load on the rivet = 26.36 kN

1.9 Classify welded joints according to type of joints.

[SSC JE - 2014 : 20 Marks]

Solution:

Classification of welded joints: According to the type of joint, welded joints are classified as:

(i) Butt/groove welded
(ii) Lap/fillet welded
(iii) Tee welded
(iv) Corner welded
(v) Slot welded
(vi) Plug welded

All these welded joints are shown in figure below.

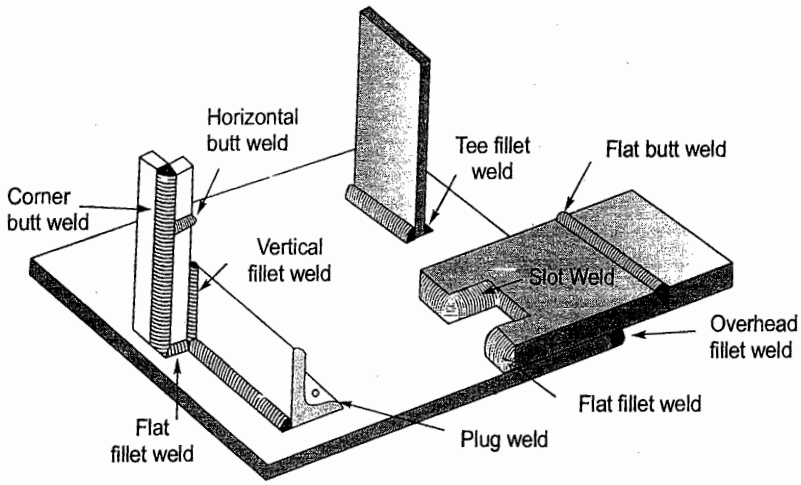


***Various types of welded joints***

**1.10 A single rivet lap joint is used to connect 12 mm thick plates by providing 20 mm dia rivets at 50 mm pitch. Determine the strength of the joint and joint efficiency. Take working stress in shear in rivets = 80 N/mm², working stress in bearing in rivets = 250 N/mm² and working stress in axial tension in plates = 156 N/mm².**

[SSC JE - 2014 : 40 Marks]

Solution:

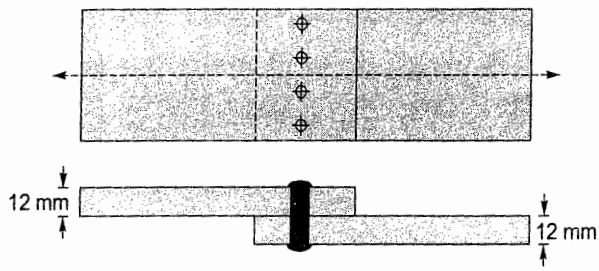


Pitch, $p = 50$ mm

Nominal diameter of rivet, $\phi = 20$ mm

$\therefore$ Gross diameter of rivet, $d = 20 + 1.5 = 21.5$ mm

Here rivets are in single shear.

$\therefore$ Strength of rivet in shear, $p_s = \frac{\pi}{4} d^2 (\tau_{v_t})$

$$= \frac{\pi}{4}(21.5)^2 (80) \text{N} = 29.04 \text{ kN} \quad \text{...(i)}$$

Strength of rivet in bearing, $p_b = dt\tau_b$

$$= (21.5)\, 12\, (250) \text{ N}$$

$$= 64.5 \text{ kN} \quad \text{...(ii)}$$

Tearing strength of plate, $p_t = (p - d)\, t\, \sigma_{at}$

$$= (50 - 21.5)\, 12\, (156) \text{ N}$$

$$= 53.352 \text{ kN} \quad \text{...(iii)}$$

$\therefore$ Strength of joint = Minimum of (i), (ii) and (iii)

= 29.04 kN

Strength of solid plate per pitch length

$$= pt\sigma_{at} = 50 \times 12 \times 156 \text{ N} = 93.6 \text{ kN}$$

$$\therefore \quad \text{Efficiency of joint} = \frac{\text{Strength of joint}}{\text{Strength of solid plate}} \times 100$$

$$= \frac{29.04}{93.6} \times 100 = 31.03\%$$

## 2. Tension, Compression and Flexural Member

2.1 A tension member is a truss consists of a pair of angle ISA 100 × 65 × 10 mm welded on either side of a 12 mm thick gusset plate, using a 7 mm weld. Design the welded joint as shown in figure.
Properties of ISA 100 × 65 × 10
Area = 15.51 cm$^2$
$C_x$ = 3.37 cm

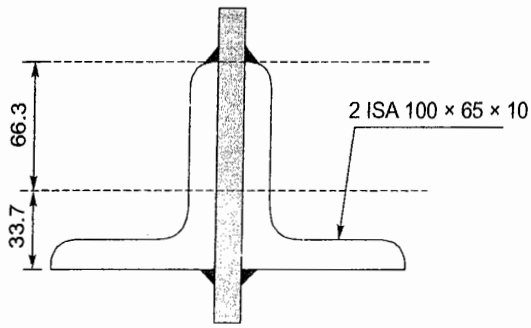


[SSC JE - 2005 : 12 Marks]

Solution:

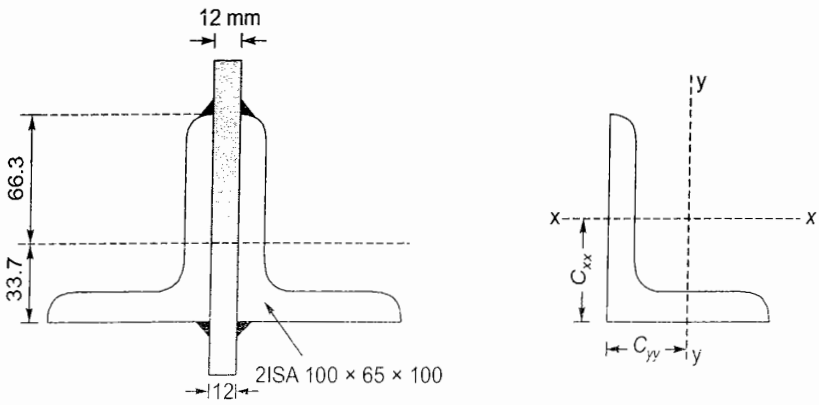


(All dimension in mm)

For ISA 100 × 65 × 10, $A$ = 1551 mm$^2$

$C_{xx}$ = 33.7 mm

$C_{yy}$ = 16.3 mm

Maximum tension that the member can carry

= Tensile strength of member

= $0.6 f_y (2A)$

= $0.6 \times 250 (2 \times 1551)$ N

= 465.3 kN

Size of weld ($s$) = 7 mm

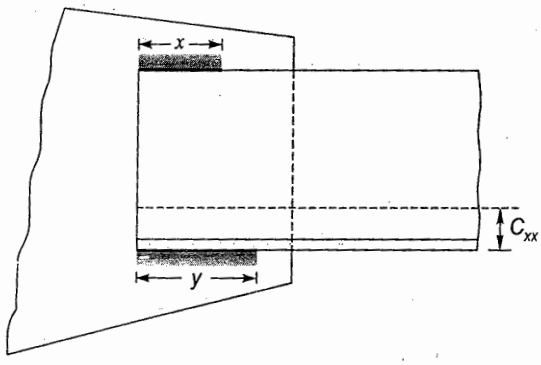


Total length of weld = $2(x + y)$

Permissible shear stress in weld = 108 N/mm²

Strength of weld per mm length = $0.7 \times 7 \times 108 = 529.2$ N/mm

$\therefore \quad 529.2 \times 2(x + y) = 465.3 \times 10^3$

($\because$ Max. tension that the member can carry = strength of weld)

$\Rightarrow \quad x + y = 439.63$ ...(i)

Taking moments about bottom weld,

$$529.2 \times (2x)(100) = 465.3 \times 10^3 \times (C_{xx})$$

$$\Rightarrow \quad 105840x = 465.3 \times 10^3 (33.7)$$

$$\Rightarrow \quad x = 148.15 \text{ mm}$$

$$\therefore \quad y = 439.63 - x = 439.63 - 148.15 = 291.48 \text{ mm}$$

$\therefore$ Provide $x \simeq 150$ mm and $y \simeq 295$ mm weld length at top and bottom respectively.

**2.2 An RSJ 55 cm deep and 19 cm wide having flange and web thicknesses of 1.5 cm and 0.99 cm respectively is used as a beam. Calculate the moment of resistance at a section where maximum stress is 100 N/mm².**

**[SSC JE - 2009 : 10 Marks]**

**Solution:**

Maximum stress is limited to 100 N/mm².

Moment of inertia of the section about $x$-$x$

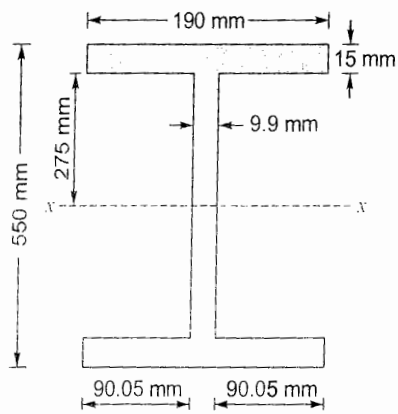


$$I_{xx} = 190 \times \frac{550^3}{12} - (180.1)\frac{520^3}{12}$$

$$= 523.98 \times 10^6 \text{ mm}^4$$

$\therefore$ Section modulus, $$Z_{xx} = \frac{I_{xx}}{y} = \frac{523.98 \times 10^6}{275}$$

$$= 1.905 \times 10^6 \text{ mm}^3$$

$\therefore$ Moment of resistance of the section

$$M = fZ_{xx} = 100 \times 1.905 \times 10^6 \text{ Nmm}$$

$$= 190.5 \text{ kNm}$$

2.3 Compute the allowable compressive load on an axially loaded steel column having a cross-section as shown in the figure and an effective length of 3.5 m.

For the purpose of computing the cross-sectional area, the moment of inertia and the radius of gyration, the maximum width of the outstand should be taken out not more than 16 times the thickness of the flange. Also, the maximum depth of web should be taken not more than 50 times its thickness.

Use the following data:

| $l/r$ | Allowable stress in axial compression (kg/cm$^2$) |
|---|---|
| 60 | 1130 |
| 70 | 1075 |
| 80 | 1007 |
| 90 | 928 |
| 100 | 840 |

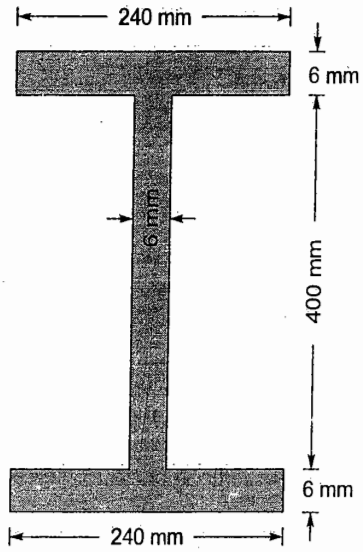


[SSC JE - 2011 : 15 Marks]

**Solution:**

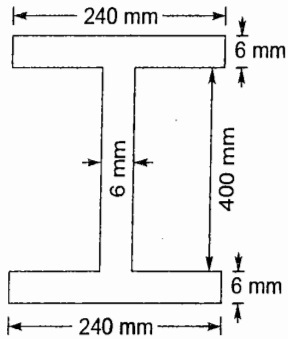


Flange outstand $\leq$ 16 × Flange thickness = 16 × 6 = 96 mm

Maximum web depth $\leq$ 50 × Web thickness = 50 × 6 = 300 mm

Thus the effective section is shown below:

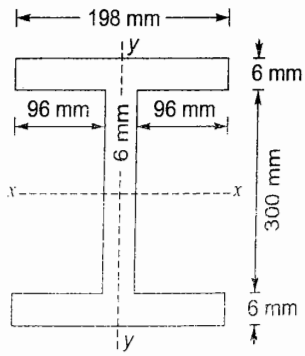


$\therefore$ Cross-sectional area, $A = (198 \times 6) \times 2 + 300 \times 6 = 4176 \text{ mm}^2$

Moment of inertia about $x$-$x$ $\quad I_{xx} = \dfrac{198 \times (300+6+6)^3}{12} - \dfrac{192 \times 300^3}{12}$

$= 69.13 \times 10^6 \text{ mm}^4$

Moment of inertia about $y$-$y$, $\quad I_{yy} = \dfrac{6 \times 198^3}{12} \times 2 + \dfrac{300 \times 6^3}{12}$

$= 7.77 \times 10^6 \text{ mm}^4$

Thus, $\quad I_{yy} < I_{xx}$

$\therefore$ Minimum radius of gyration,

$$r_{min} = r_{yy} = \sqrt{\frac{I_{yy}}{A}} = \sqrt{\frac{7.77 \times 10^6}{4176}} = 43.135 \text{ mm}$$

Effective length of column, $\quad l = 3500 \text{ mm}$

$\therefore$ Slenderness ratio, $\quad \lambda = \dfrac{l}{r_{min}} = \dfrac{3500}{43.135} = 81.141$

∴ From given table, allowable compressive stress after interpolation,

$= 997.9861 \text{ kg/cm}^2 = 97.9 \text{ N/mm}^2$

∴ Allowable compressive load $= 97.9 \times 4176 \text{ N}$

$= 408.83 \text{ kN} \simeq 41.7 \text{ tons}$

**2.4 Design a built-up column composed of two channel sections placed back to back, carrying an axial load of 1345 kN. Effective length of column is 4.95 m. [Take $f_y$ = 250 kN/mm²]**

**[SSC JE - 2012 : 20 Marks]**

**Solution:**

Axial load = 1345 kN

Effective length ($l$) = 4.95 m

$f_y = 250 \text{ N/mm}^2$

Let allowable compressive stress in the column = 110 N/mm²

∴ Cross-sectional area required

$$= \frac{1345 \times 10^3}{110} = 12227.3 \text{ mm}^2$$

∴ Area of one channel section required

$$= \frac{12227.3}{2} = 6113.65 \text{ mm}^2$$

Try ISMC 400 @ 448.61 N/m

$A = 6293 \text{ mm}^2$ $\quad D = 400 \text{ mm}$

$b_f = 100 \text{ mm}$ $\quad C_{yy} = 24.2 \text{ mm}$

$I_{xx} = 15082.8 \times 10^4 \text{ mm}^4$ $\quad I_{yy} = 504.8 \times 10^4 \text{ mm}^4$

$r_{xx} = 154.8 \text{ mm}$ $\quad r_{yy} = 28.3 \text{ mm}$

$g = 60 \text{ mm}$

∴ Area provided by two channels

$= 2 \times 6293 = 12586 \text{ mm}^2 > 12227.3 \text{ mm}^2$ (OK)

The two channels are so placed that $I_{xx} = I_{yy}$ for the built up column

Now, $I_{xx} = I_{yy}$

∴ $r_{min}$ is kept equal to $r_{xx}$

⇒ $r_{min} = r_{xx} = 154.8 \text{ mm}$

∴ $$\lambda = \frac{l_{eff}}{r_{min}} = \frac{l}{r_{xx}} = \frac{4950}{154.8} = 31.977$$

For $f_y = 250 \text{ N/mm}^2$ and $\lambda = 31.977$

$\sigma_{ac} = 143.81 \text{ N/mm}^2 > 110 \text{ N/mm}^2$ (OK)

∴ Load carrying capacity $= 143.81 \times 12586 \text{ N} = 1809.99 \text{ kN} > 1345 \text{ kN}$ (OK)

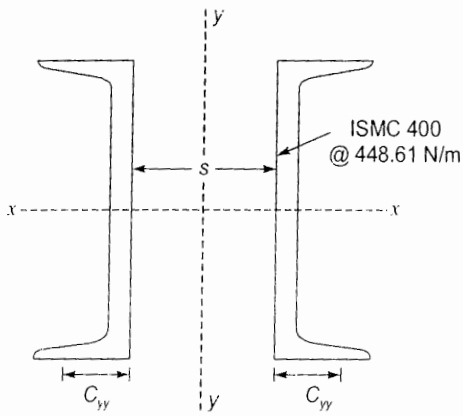

$$\therefore \quad 2I_{xx} = 2\left[I_{yy} + A\left(\frac{s}{2} + C_{yy}\right)^2\right]$$

$$\Rightarrow \quad 2 \times 15082.8 \times 10^4 = 2\left[504.8 \times 10^4 + 6293\left(\frac{s}{2} + 24.2\right)^2\right]$$

$$\Rightarrow \quad s = 256 \text{ mm}$$

$\therefore$ Place two channels at a clear spacing of 256 mm.

**Design of lacing:**

Let lacing bars are inclined at 45° with the vertical.

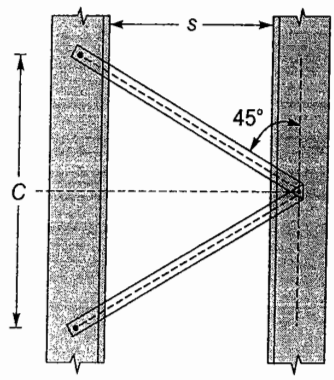


Spacing for lacing bars,

$$C = 2(s + g + g) \cot 45°$$

(For ISMC 400 @ 448.61 N/m value of $g$ = 60 mm)

$$= 2(256 + 60 + 60)(1) = 752 \text{ mm}$$

$$\therefore \quad \frac{C}{r_{yy}} = \frac{752}{28.3} = 26.57 < 50 \qquad \text{(OK)}$$

Also $\quad 0.7\lambda = 0.7 \times 31.977 = 22.38$

$$\therefore \quad \frac{C}{r_{yy}} > 0.7\lambda \qquad \text{(Not safe)}$$

$\therefore$ Change 45° inclination to 60° i.e., 26.57 > 22.38

$$\therefore \quad C = 2(256 + 60 + 60) \cot 60° = 434.17 \text{ mm}$$

$$\therefore \quad \frac{C}{r_{yy}} = \frac{434.17}{28.3} = 15.34 < 0.7\lambda \qquad \text{(OK)}$$

Maximum shear force in lacing,

$$V\,2.5 \text{ of axial load} = \frac{2.5}{100} \times 1345 = 33.625 \text{ kN}$$

$\therefore$ Shear in each panel, $\quad \dfrac{V}{N} = \dfrac{33.625}{2} = 16.81 \text{ kN}$

$\therefore$ Compressive force in lacing bar

$$= \frac{V}{N} \operatorname{cosec} 60° = 16.81 \times \frac{2}{\sqrt{3}} = 19.41 \text{ kN}$$

Let 20 mm diameter rivets are used.

∴ For 20 mm dia. rivets, width of lacing flat = 60 mm

Gross dia. of rivet = 20 + 1.5 = 21.5 mm

∴ Minimum thickness of lacing flat

$$\geq \frac{1}{40} \text{ (Length of lacing flat between inner rivets)}$$

$$= \frac{1}{40}(256+60+60) \text{ cosec } 60°$$

$$= 10.85 \text{ mm} \simeq 14 \text{ mm (say)}$$

∴ Provide 60 ISF 14.

∴ Minimum radius of gyration ($r$) = $\frac{t}{\sqrt{12}} = \frac{14}{\sqrt{12}} = 4.0415$ mm

$$\lambda = \frac{l}{r} = \frac{256 \text{ cosec } 60°}{4.0415} = 73.14 < 145 \quad \text{(OK)}$$

For $f_y = 250$ N/mm² and $\lambda = 73.14$, $\sigma_{ac} = 108.546$ N/mm²

∴ Compressive load carrying capacity of lacing flat

$$= \sigma_{ac} \times \text{width of flat} \times \text{thickness of flat}$$

$$= 108.546 \times 60 \times 14 \text{ N}$$

$$= 91.18 \text{ kN} > 23.77 \text{ kN} \quad \text{(OK)}$$

Tensile strength of lacing flat = $(B-d)\, t\sigma_{at} = (60-21.5)\, 14\, (0.6 \times 250)$ N

$$= 80.85 \text{ kN} > 23.77 \text{ kN} \quad \text{(OK)}$$

**Design of connections:**

∵ 20 mm dia. rivets are assumed and let two lacing flats are connected at one point.

∴ Two way shear strength of rivet,

$$P_s = 2 \times \frac{\pi}{4} d^2 \times \tau_{v_f}$$

$$= 2 \times \frac{\pi}{4} \times (21.5)^2 \times 100 \text{ N} = 72.61 \text{ kN}$$

Bearing strength of rivet, $P_b = dt\sigma_b = (21.5)(14)\,300 \text{ N} = 90.3$ kN

∴ Strength of rivet = 72.61 kN

Force on rivet from lacing flat = $2\left(\frac{V}{N}\right)\cot\theta = 2\,(16.81)\cot 60° = 19.41$ kN

∴ No. of rivets required = $\frac{\text{Force on rivet}}{\text{Strength of rivet}} = \frac{19.41}{72.61} = 0.27 \simeq 1$

Provide one 20 mm diameter rivet.

**Desing of tie plate:**

Effective depth of tie plate ($d'$) = $(s + 2C_{yy})$

$$= (256 + 2 \times 24.2)$$

$$= 304.4 \text{ mm}$$

∴ Overall depth of tie plate ($d$) = $d' + 2 \times$ Edge distance

$$= 304.4 + 2 \times 40$$

$$= 384.4 \text{ mm} \simeq 385 \text{ mm (say)}$$

Thickness of tie plate $\geq \frac{1}{50}(s+2g) = \frac{1}{50}(256 + 2 \times 60)$

$$= 7.52 \text{ mm} = 8 \text{ mm (say)}$$

Length of tie plate = $s + 2b_f = 256 + 2 \times 100 = 456$ mm

∴ Provide a tie plate of size 456 × 385 × 8 mm and connect it with 20 mm dia. rivets.

**2.5 Calculate the moment of resistance of the compound steel section shown in the figure. The compound section consists of two steel sections ISMB 200 @ 25.4 kg/m ($I_{XX}$ = 2235.4 cm$^4$, $A_{XX}$ = 32.33 cm$^2$) with a single cover plate, 40 cm wide and 16 mm thick connected to the top flange.**

**Assume bending stress = 150 MPa.**

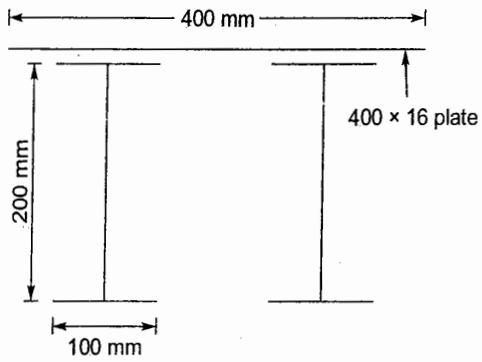


**[SSC JE - 2013 : 15 Marks]**

**Solution:**

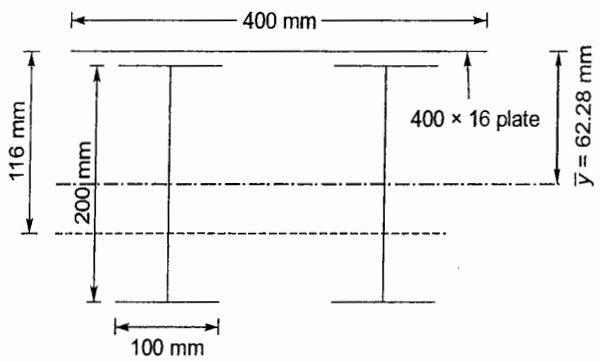


Distance of centroid of section from top of cover plate = $\bar{y}$

$$= \frac{2 \times 3233 \times (100+16) + 400 \times 16 \times 8}{2 \times 3233 + 400 \times 16} = 62.28 \text{ mm}$$

∴ $I_{xx} = 2I_{xx}$ ($I$-section) + $I_{xx}$ (Plate)

$$= 2\left[2235.4 \times 10^4 + 3233(116-62.28)^2\right] + \frac{400 \times 16^3}{12} + 400 \times 16(62.28-8)^2$$

$$= 82.361 \times 10^6 \text{ mm}^4$$

∴ Section modulus,

$$Z_{xx} = \frac{I_{xx}}{y_{max}} = \frac{82.361 \times 10^6}{(216-\bar{y})} = \frac{82.361 \times 10^6}{(216-62.28)} = 53.58 \times 10^4 \text{ mm}^3$$

∴ Moment of resistance, $M = f_b \times Z_{xx} = 150 \times 53.58 \times 10^4$ Nmm = 80.37 kNm

2.6 A mild steel T-section has the following cross-section dimensions:

| | | |
|---|---|---|
| Total depth | = | 200 mm |
| Width of flange | = | 120 mm |
| Thickness of flange | = | 20 mm |
| Thickness of web | = | 20 mm |

If the yield stress, $\sigma_y = 250$ MPa, determine the plastic moment capacity of the section. Also calculate the shape factor for the section.

[SSC JE - 2013 : 15 Marks]

Solution:

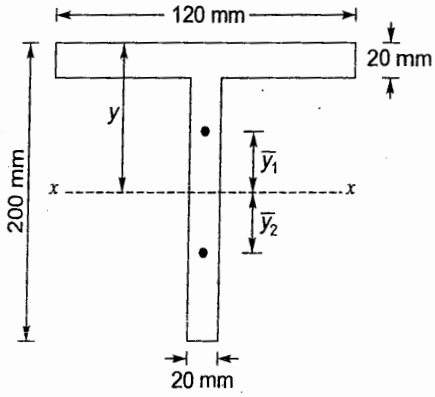


Plastic moment capacity, $M_P = \sigma_y Z_P$

where $Z_p$ = Plastic section modulus

$$= \frac{A}{2}(\bar{y}_1 + \bar{y}_2)$$

Let $x$-$x$ be the equal area axis dividing the section into two equal halves.

Let distance of axis $x$-$x$ from top = $y$

$\therefore$ Area of bottom portion of $T$-beam = $\frac{1}{2}$(Total area of T-beam)

$$\Rightarrow \quad (200 - y)\,20 = \frac{1}{2}\left[120 \times 20 + (200 - 20)20\right]$$

$$\Rightarrow \quad 40\,(200 - y) = 6000$$

$$\Rightarrow \quad y = 50 \text{ mm}$$

Distance of centroid of upper half from $x$-$x$ = $\bar{y}_1$

$$= \frac{120 \times 20 \times (50 - 10) + (50 - 20)20(50 - 20)/2}{120 \times 20 + (50 - 20)20} = 35 \text{ mm}$$

Distance of centroid of lower half from $x$-$x$

$$= \bar{y}_2 = \frac{(200 - y)}{2} = 75 \text{ mm}$$

$\therefore$ Plastic section modulus, $Z_p = \frac{A}{2}(\bar{y}_1 + \bar{y}_2) = \frac{6000}{2}(35 + 75) = 330000 \text{ mm}^3$

$\therefore$ Plastic moment capacity, $M_p = \sigma_y Z_p$

$$= (250 \times 330000) \text{ Nmm}$$

$$= 82.5 \text{ kNm}$$

■■■■