Unit - II
2.1 Sources, Circuit Reduction and Problems

Dr.Santhosh.T.K.

Syllabus

UNIT – II **14 Periods**

DC Circuit Analysis: Voltage source and current sources, ideal and practical, Kirchhoff's laws and applications to network solutions using mesh analysis, - Simplifications of networks using series- parallel, Star/Delta transformation, DC circuits-Current-voltage relations of electric network by mathematical equations to analyse the network (Superposition theorem, Thevenin's theorem, Maximum Power Transfer theorem), Transient analysis of R-L, R-C and R-L-C Circuits.

AC Steady-state Analysis: AC waveform definitions - Form factor - Peak factor - study of R-L - R-C -RLC series circuit - R-L-C parallel circuit - phasor representation in polar and rectangular form - concept of impedance - admittance - active - reactive - apparent and complex power - power factor, Resonance in R-L-C circuits - 3 phase balanced AC Circuits

DC

Steady-state

AC

Transient → Motors → Starter

Fan → Switch.

why?

capacitor →

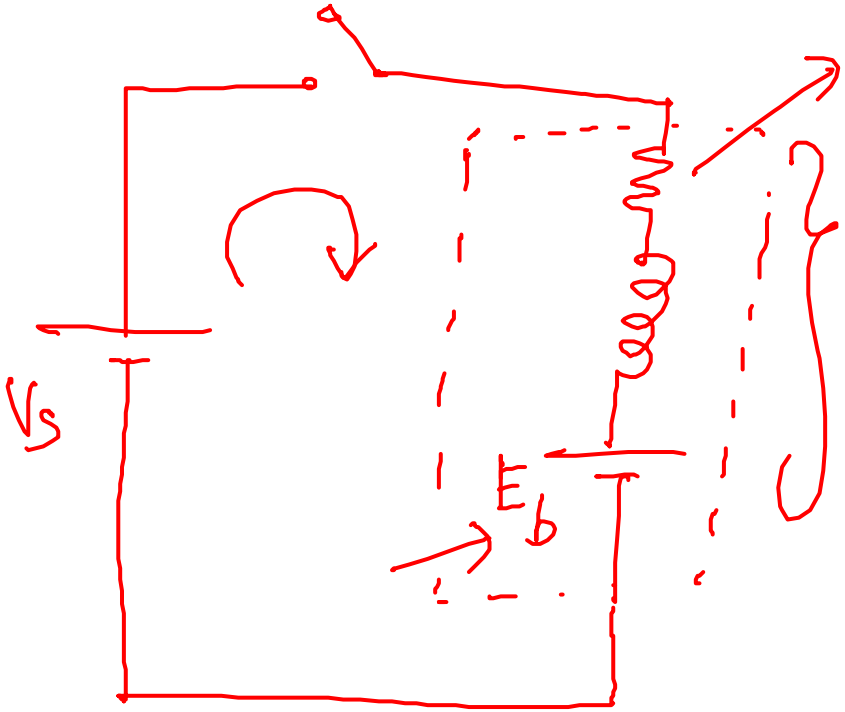

DC Motor

$E_b \propto N$

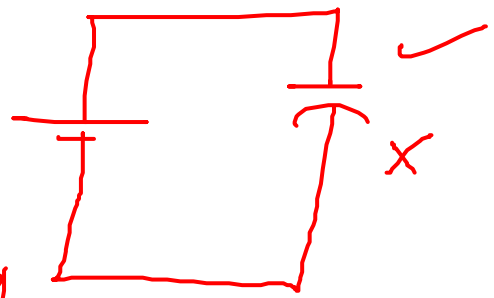

1m

Need for circuit Analysis

Diode → IN4007

→ 1A, 1000V

→ PIV

Datasheet

Simulation tools

Time to market

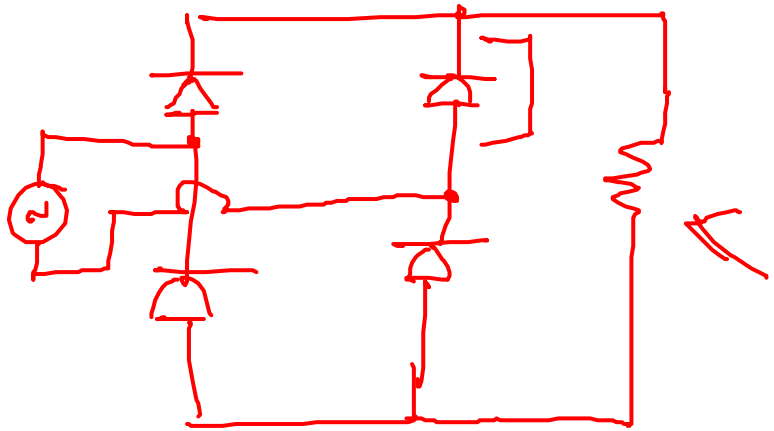

DC circuit Analysis

Sources → V, I → Ideal, practical

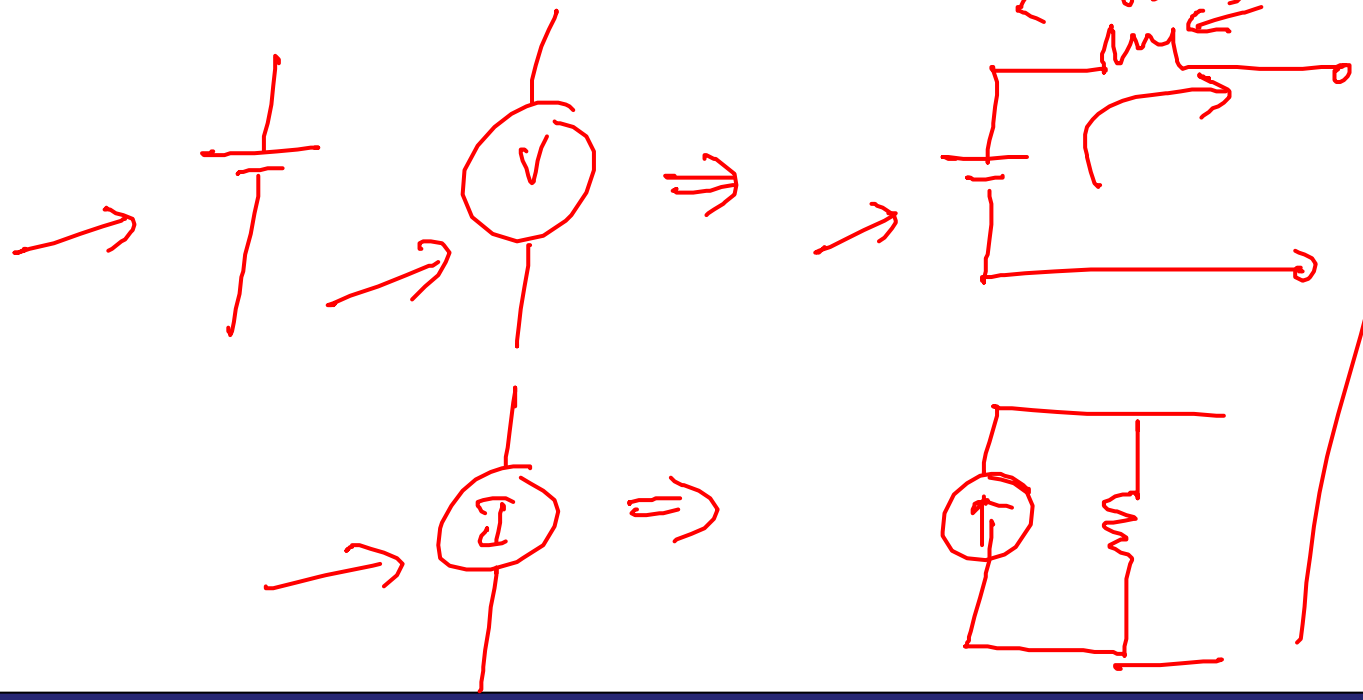

$V = IR$

Dependent & Independent

Reliability

1N4007 → PoF → 1 in mil, 10 in mil

CE → IS13252, IEC 60950-1

Engineering Problem Solving

- All engineers share a considerable amount of common ground, particularly when it comes to problem solving.
- Circuit analysis has long been a traditional introduction to **the art of problem solving from an engineering perspective.**
- *Analysis* is the process through which we determine the scope of a problem, obtain the information required to understand it, and compute the parameters of interest.
- *Design* is the process by which we synthesize something new as part of the solution to a problem.
- A crucial part of design is analysis of potential solutions!

Relationship of Circuit Analysis to Engineering

In addition to preparing for further study in electrical engineering, we also will develop:

- a methodical approach to problem solving
- the ability to determine the goal or goals of a particular problem
- skill at collecting the information needed to effect a solution, and
- opportunities for practice at verifying solution accuracy.

Problem-Solving Strategies

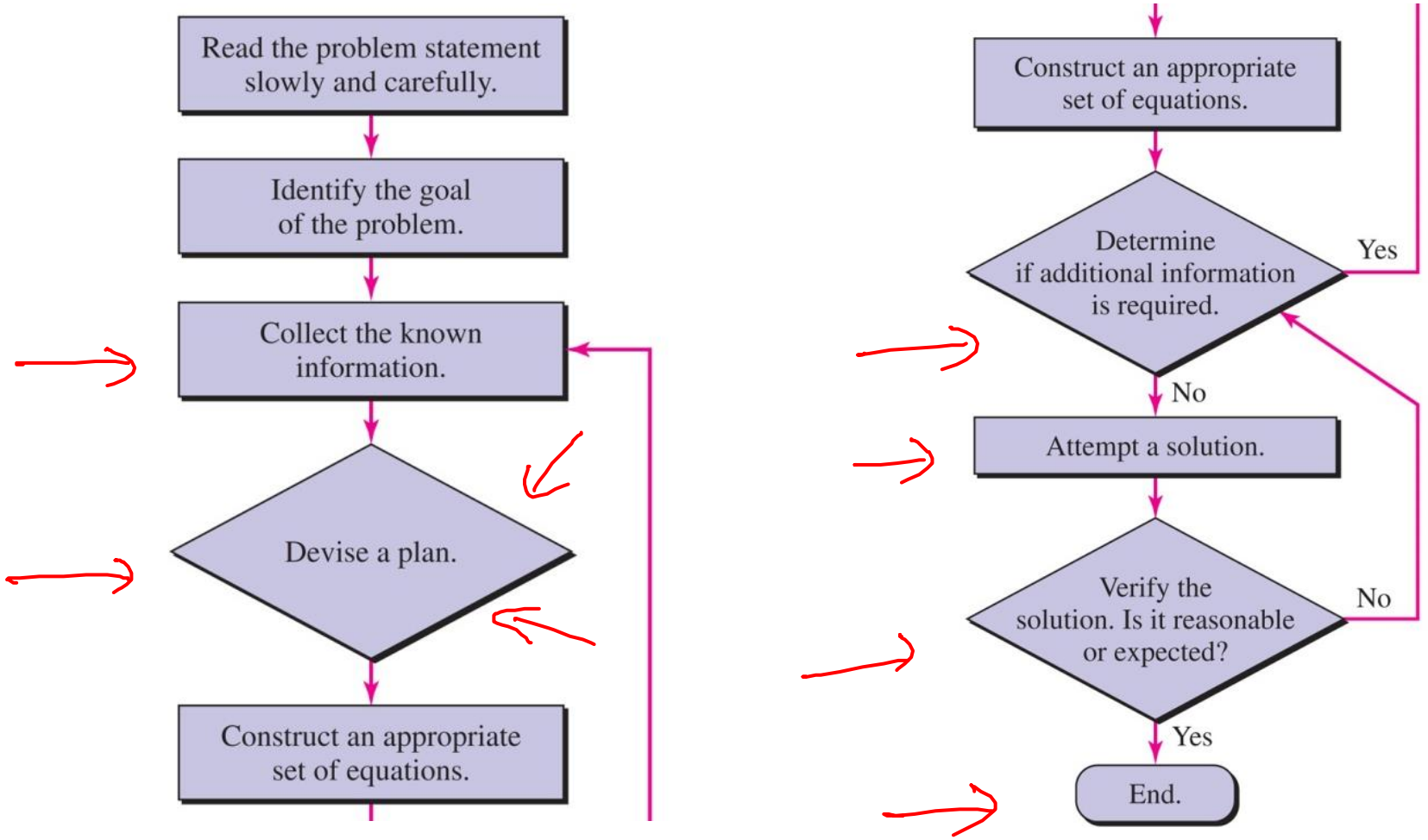

Circuit Analysis (DC) ⟶ AC

Toolchest
- Division
- Reduction

$\Rightarrow R_{eq_1} = R_1 + R_2$

- Same I ✓
- Connected ✓

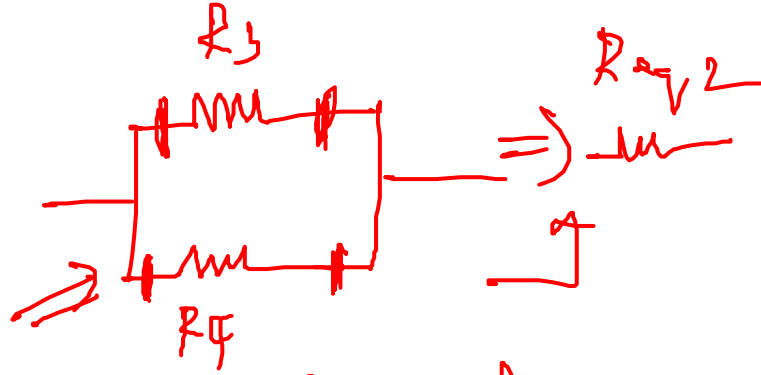

$$\frac{1}{Req_2} = \frac{1}{R_3} + \frac{1}{R_f}$$

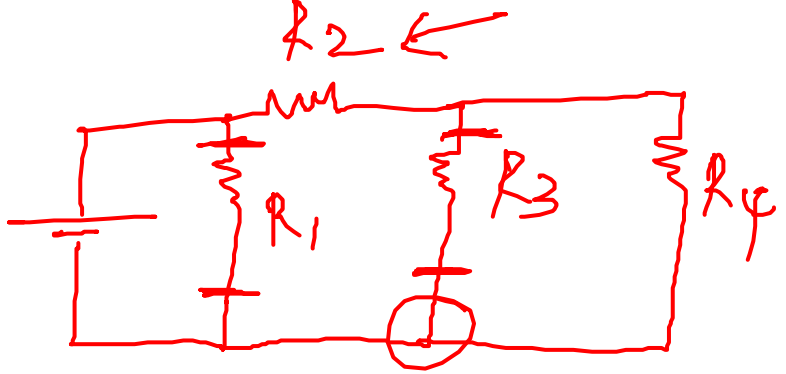

R_1 & R_3 ⟶

Law of Voltage division

Series →

$$V_{R_1} = \frac{R_1}{R_1 + R_2} V_s$$

$$V_{R_2} = \frac{R_2}{R_1 + R_2} V_s$$

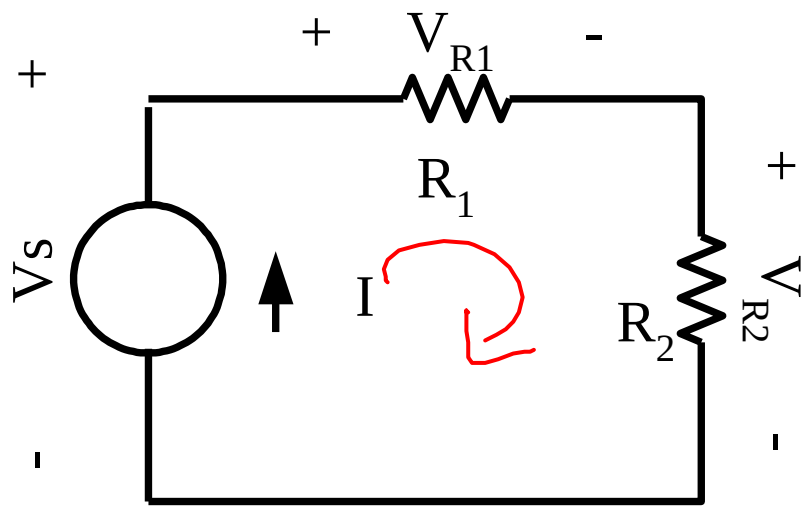

Law of Current division

Parallel → Voltage - same

$$I_{R_1} = \frac{R_2}{R_1 + R_2} I$$

$$I_{R_2} = \frac{R_1}{R_1 + R_2} I$$

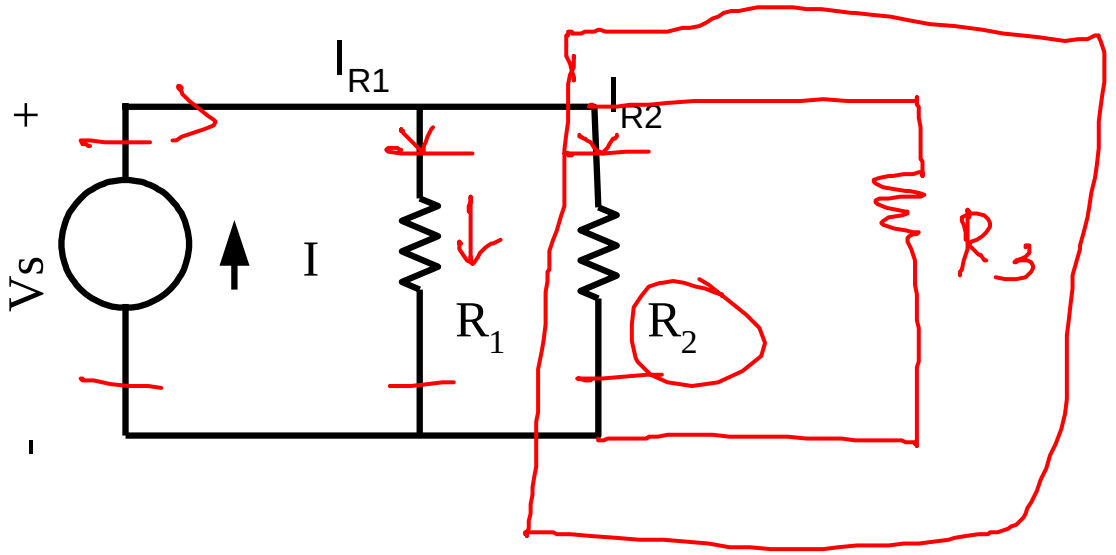

Division Rules

Sample Problems

Determine the equivalent resistance between terminals A and B of the figure shown below.

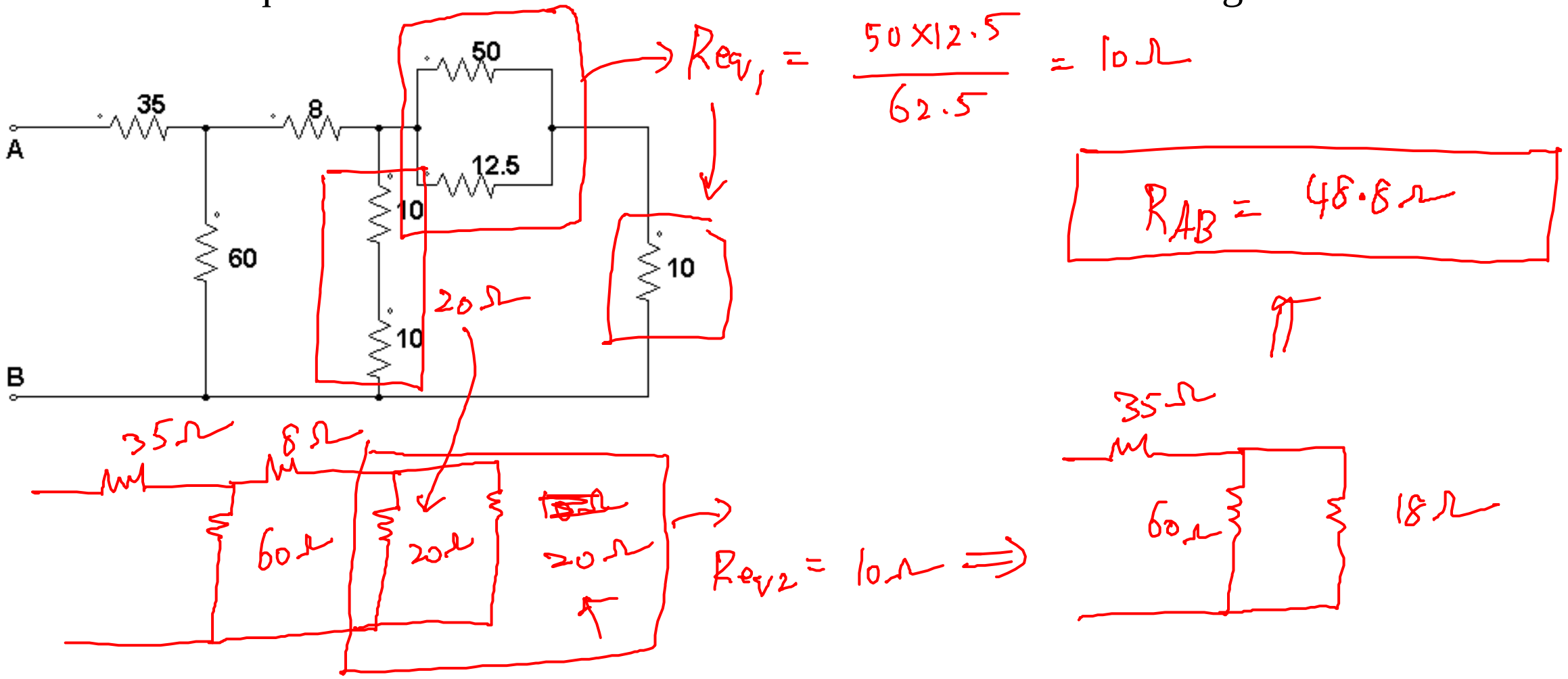

Exercise Problem

Determine the current I_3.

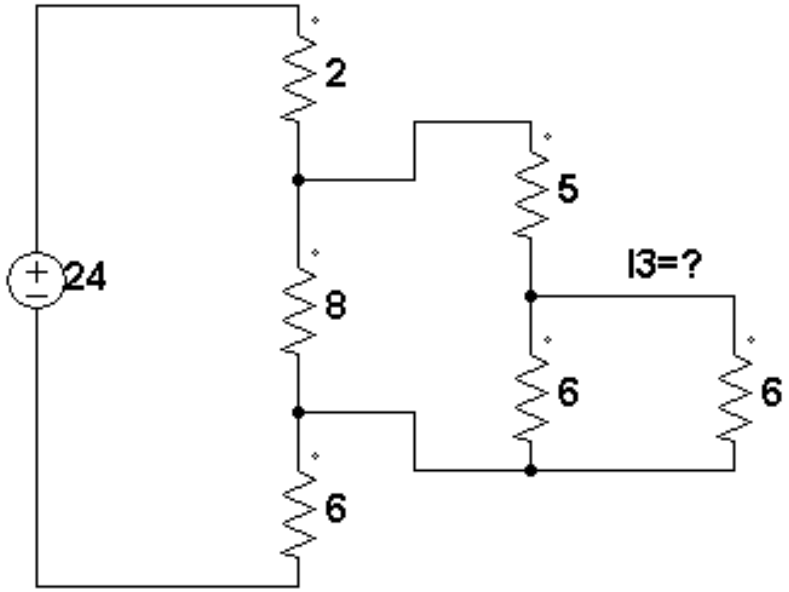

Summary

DC

Circuit Analysis → V, I

DC

Toolchest → Reduction, Division.