JSS MAHAVIDYAPEETHA

JSS Science and Technology University

Sri Jayachamrajendra College of Engineerging

Microcontrollers and Applications

(22EI530)

"AUTOMATIC VEHICLE HEADLIGHT CONTROL BASED ON LIGHT CONDITIONS USING STM32"

Event-II

By:

Meghana G
(02JST23UEI037)

K B Vedika
(02JST23UEI029)

Sanjana S Pai
(02JST23UEI055)

Pratheeksha M
(02JST23UEI047)

Submitted to:

Dr. Sheela N

Asst. Professor

Dept. of Electronics and Instrumentation,

SJCE, JSSSTU

DEPARTMENT OF ELECTRONICS AND INSTRUMENTATION ENGINEERING

2025-2026

CONTENT

- Introduction
- Objective
- Circuit diagram
- Working Procedure
- Code
- Result
- Components required and total cost
- Conclusion

AUTOMATIC VEHICLE HEADLIGHT CONTROL BASED ON LIGHT CONDITIONS USING STM32

INTRODUCTION

The rapid growth of automotive technology has increased the need for intelligent and energy-efficient vehicle systems that enhance both safety and driving comfort. One such important feature is the automatic control of vehicle headlights, which plays a vital role in ensuring proper visibility during night driving, foggy weather, tunnels, and low-light conditions. In conventional vehicles, headlights are manually operated by the driver, which may lead to delayed switching, improper brightness levels, and unnecessary battery usage. To overcome these limitations, an Automatic Vehicle Headlight Control System is introduced.

This project focuses on designing and implementing an Automatic Vehicle Headlight Control System using an embedded controller. The system continuously monitors the surrounding light intensity using a light sensor and automatically switches the headlights ON or OFF depending on environmental conditions. When the ambient light level decreases, such as during night or in dark areas, the headlights turn ON automatically, and when sufficient light is available, they turn OFF, thereby eliminating the need for manual operation.

In addition to automatic switching, the system also adjusts the brightness of the headlights using Pulse Width Modulation (PWM) technique. PWM allows the system to control the intensity of the headlights by varying the duty cycle of the signal applied to the light source. This ensures optimal illumination for the driver while minimizing power consumption and reducing stress on the vehicle battery.

The project integrates key components such as a light sensor, a microcontroller, and power electronics to achieve efficient and reliable headlight control. The microcontroller acts as the brain of the system, processing sensor data and generating appropriate PWM signals to regulate the headlight brightness. This embedded-based approach makes the system compact, cost-effective, and highly adaptable for real-world automotive applications.

Overall, the proposed system enhances driving convenience, improves road safety, prevents unnecessary battery drain, and contributes to the development of smarter and more energy-efficient vehicles. This project demonstrates a practical and meaningful application of embedded systems in modern automotive technology.

OBJECTIVE

The main objectives of the Automatic Vehicle Headlight Control Based on Light Conditions project are:

- To design and implement an automatic headlight control system using an embedded controller.
- To automatically switch vehicle headlights ON and OFF based on surrounding light intensity.
- To adjust the brightness of headlights according to ambient light conditions using PWM control.
- To minimize battery power consumption and prevent unnecessary battery drain.
- To reduce driver effort and improve overall road safety.
- To demonstrate a real-time automotive embedded system application using sensors and microcontrollers.

BLOCK DIAGRAM:

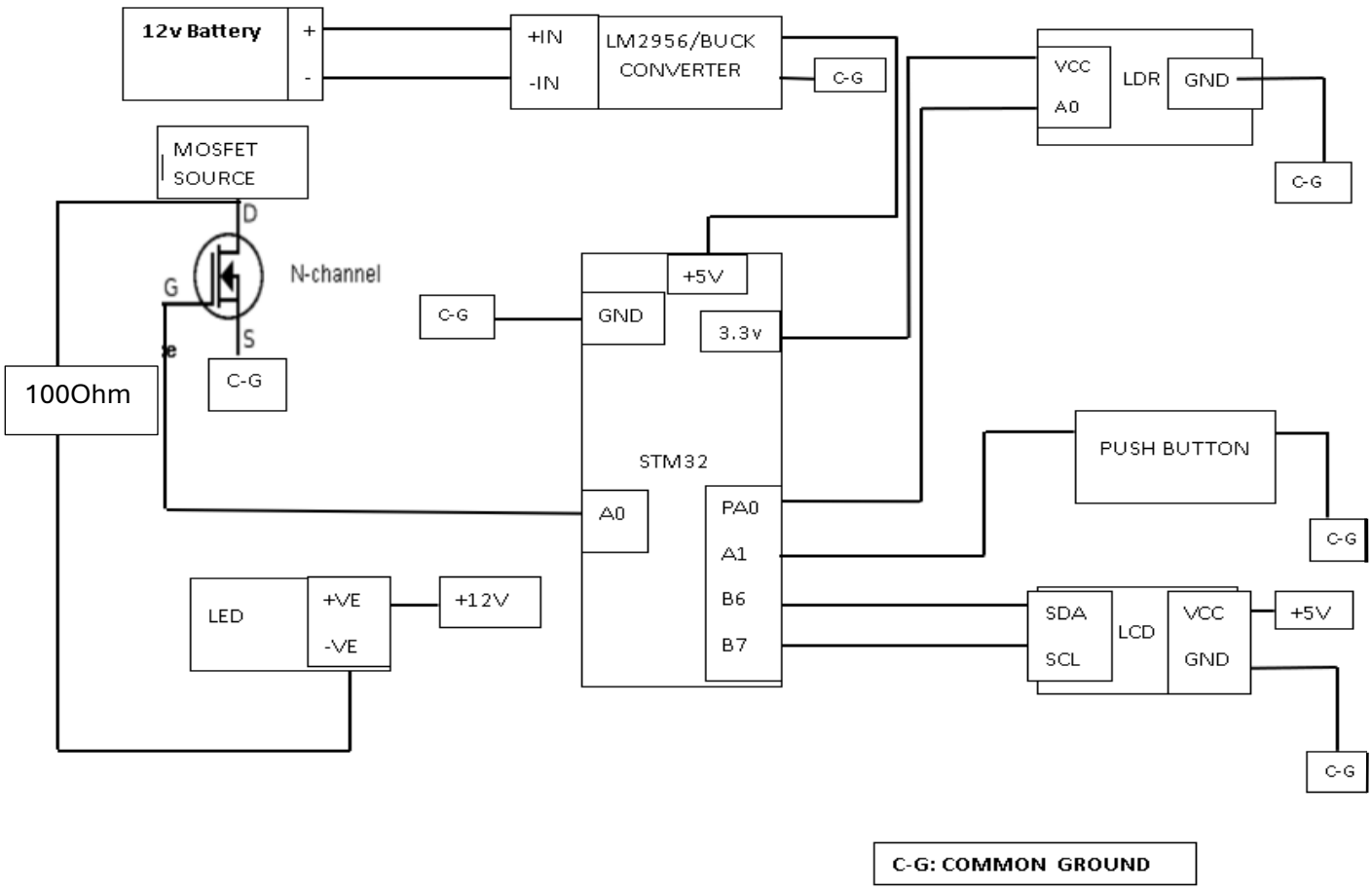

WORKING PROCEDURE

1. **Power Supply Initialization**
   The system is powered using a 12V vehicle battery. This 12V supply is directly used to power the LED headlight. The same 12V is also fed into the LM2596 buck converter, which steps down the voltage to 5V. This regulated 5V is supplied to the STM32 microcontroller, LCD display, and other low-power components. All components share a common ground to ensure proper operation.
2. **Microcontroller Setup**
   The STM32 microcontroller acts as the central control unit of the system. It is powered by 5V, and internally regulated to 3.3V for its core operation. The program is loaded into the microcontroller using the ST-LINK interface through SWDIO and SWCLK pins.
3. **Ambient Light Detection**
   An LDR (Light Dependent Resistor) is used to sense the ambient light intensity. The LDR output varies according to the surrounding light conditions and is connected to an ADC pin (PA0) of the STM32.
   - In bright conditions, the LDR resistance is low, producing a higher voltage level.
   - In dark conditions, the resistance increases, producing a lower voltage level.
4. **Decision Making by STM32**
   The STM32 continuously reads the analog voltage from the LDR using its internal ADC. The sensed value is compared with a predefined threshold value programmed in the controller.
   - If the ambient light is **below the threshold**, the system identifies it as a low-light condition.
   - If the ambient light is **above the threshold**, it is treated as sufficient daylight.
5. **Automatic Headlight ON/OFF Control**
   Based on the LDR reading:
   - In low-light conditions, the STM32 sends a control signal to the gate of the N-channel MOSFET.
   - The MOSFET turns ON and allows current to flow from the 12V supply to the LED headlight, switching it ON.
   - In bright conditions, the MOSFET is turned OFF, cutting the power supply to the LED, and the headlight turns OFF automatically.

6. **Brightness Control using PWM**
   The STM32 generates a PWM signal on pin PA8, which is applied to the gate of the MOSFET through a gate resistor. By varying the duty cycle of the PWM signal, the brightness of the LED headlight is controlled.
   - Higher duty cycle → Higher brightness
   - Lower duty cycle → Reduced brightness
     This helps in providing optimal illumination while minimizing power consumption.
7. **Manual Control using Push Button**
   A push button connected to pin PA1 allows manual control or mode switching if required (for example, enabling or disabling automatic mode). When the button is pressed, the STM32 detects the input and performs the corresponding predefined operation.
8. **Display of System Status**
   An LCD module connected via I2C (PB6 – SCL, PB7 – SDA) displays system information such as headlight status (ON/OFF), brightness level, or operating mode. This provides a user-friendly interface for monitoring the system.
9. **Overall System Operation**
   The system continuously monitors ambient light, automatically controls headlight switching, adjusts brightness using PWM, and updates the display in real time. This ensures efficient energy usage, improved driving convenience, and enhanced vehicle safety.

CODE

```
#include <Wire.h>
#include <LiquidCrystal_I2C.h>

// Change to 0x3F if your LCD needs it
LiquidCrystal_I2C lcd(0x27, 16, 2);
int ldrValue = 0;
int pwmValue = 0;
// Adjust these thresholds after testing
#define DAY_THRESHOLD      1300

// Pin definitions
#define LDR_PIN     PA0
#define BUTTON_PIN  PA1
#define LED_PWM     PA8
#define EVENING_THRESHOLD
2600

void setup(){
  pinMode(LDR_PIN,
INPUT_ANALOG);
```

```
  pinMode(BUTTON_PIN,
INPUT_PULLUP);
  pinMode(LED_PWM, PWM);
  Wire.begin();
  lcd.init();
  lcd.backlight();
  lcd.setCursor(0,0);
  lcd.print("Auto Headlight");
  lcd.setCursor(0,1);
  lcd.print("System Ready ");
  delay(1500);
  lcd.clear();
  analogWrite(LED_PWM, 0);   // LED
OFF initially
}

void loop(){
  ldrValue = analogRead(LDR_PIN);   //
0–4095
  if (digitalRead(BUTTON_PIN) ==
LOW)   // Ignition ON
  {
    lcd.setCursor(0,0);
    lcd.print("Ignition ON   ");
    /* LDR module behavior:
      Bright light → LOW ADC
      Dark         → HIGH ADC */

    if (ldrValue < DAY_THRESHOLD){
      // DAY MODE
      pwmValue = 0;  // LED OFF
      lcd.setCursor(0,1);
      lcd.print("Day Mode      ");
    }
    else if (ldrValue <
EVENING_THRESHOLD){
      // EVENING MODE
      pwmValue = 102;  // 40%
brightness
      lcd.setCursor(0,1);
      lcd.print("Evening Mode  ");
    }
    else{
      // NIGHT MODE
      pwmValue = 255;  // FULL
brightness
      lcd.setCursor(0,1);
      lcd.print("Night Mode    ");
    }analogWrite(LED_PWM,
pwmValue);
  }
  else{
    // Ignition OFF
    analogWrite(LED_PWM, 0);
    lcd.setCursor(0,0);
    lcd.print("Ignition OFF  ");
    lcd.setCursor(0,1);
    lcd.print("Light OFF     ");
  }delay(300);
}
```

RESULT:

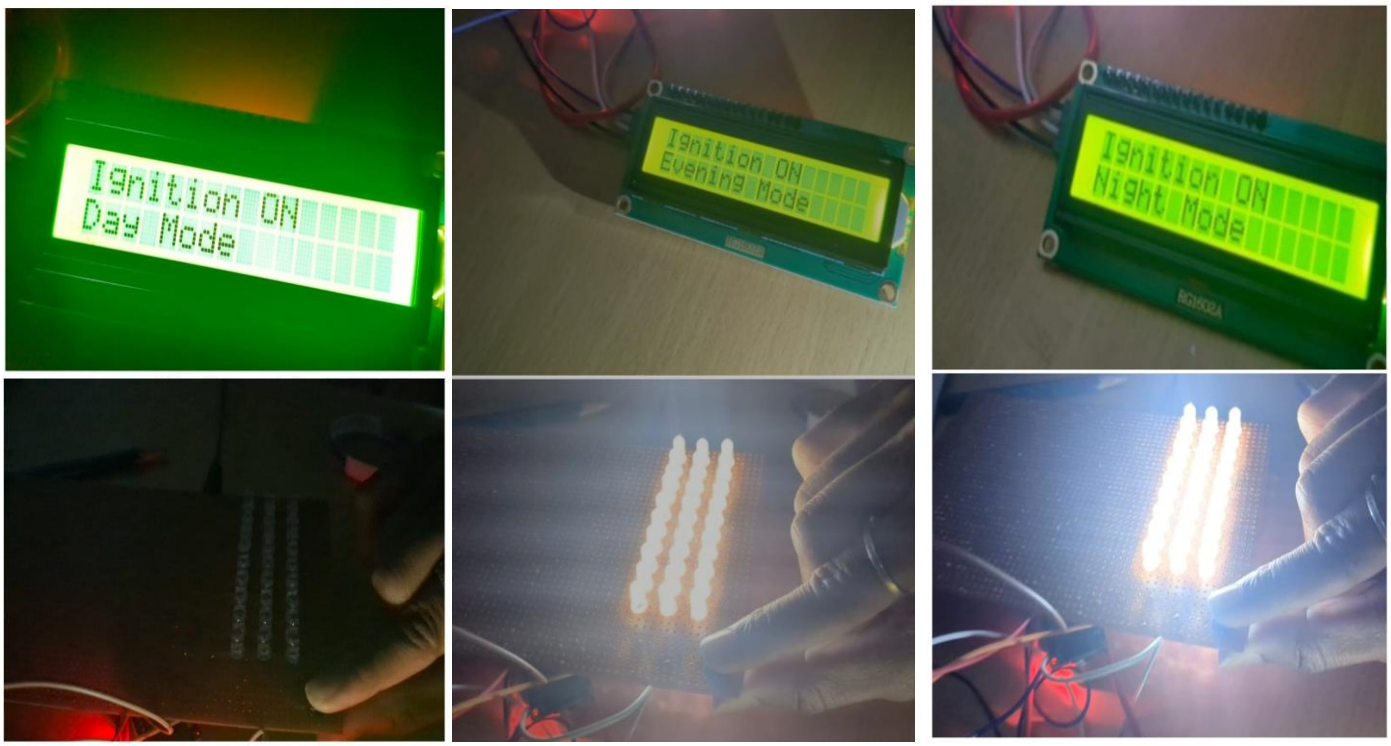

(a) (b) (c)

COMPONENTS REQUIRED:

Si No	Components Used	Cost
1	12V Adapter	180
2	STM32(STM32F103)	250
3	Mosfet source	40
4	Buck converter	180
5	Light sensor (LDR)	80
6	Display(LCD) 16*2	270
7	LEDs connected in series	60
8	Resistors,push button and switches	80

Total cost: 1,140Rs

CONCLUSION

The Automatic Vehicle Headlight Control System successfully demonstrates the use of embedded systems to enhance vehicle safety and energy efficiency. By automatically switching the headlights ON and OFF based on ambient light conditions and adjusting brightness using PWM, the system reduces driver effort and prevents unnecessary battery drain. The integration of sensors, a microcontroller, and power electronics makes the system reliable, cost-effective, and suitable for modern automotive applications. Overall, this project highlights a practical step toward smarter, safer, and more energy-efficient vehicles.

REFERENCE: chatgpt