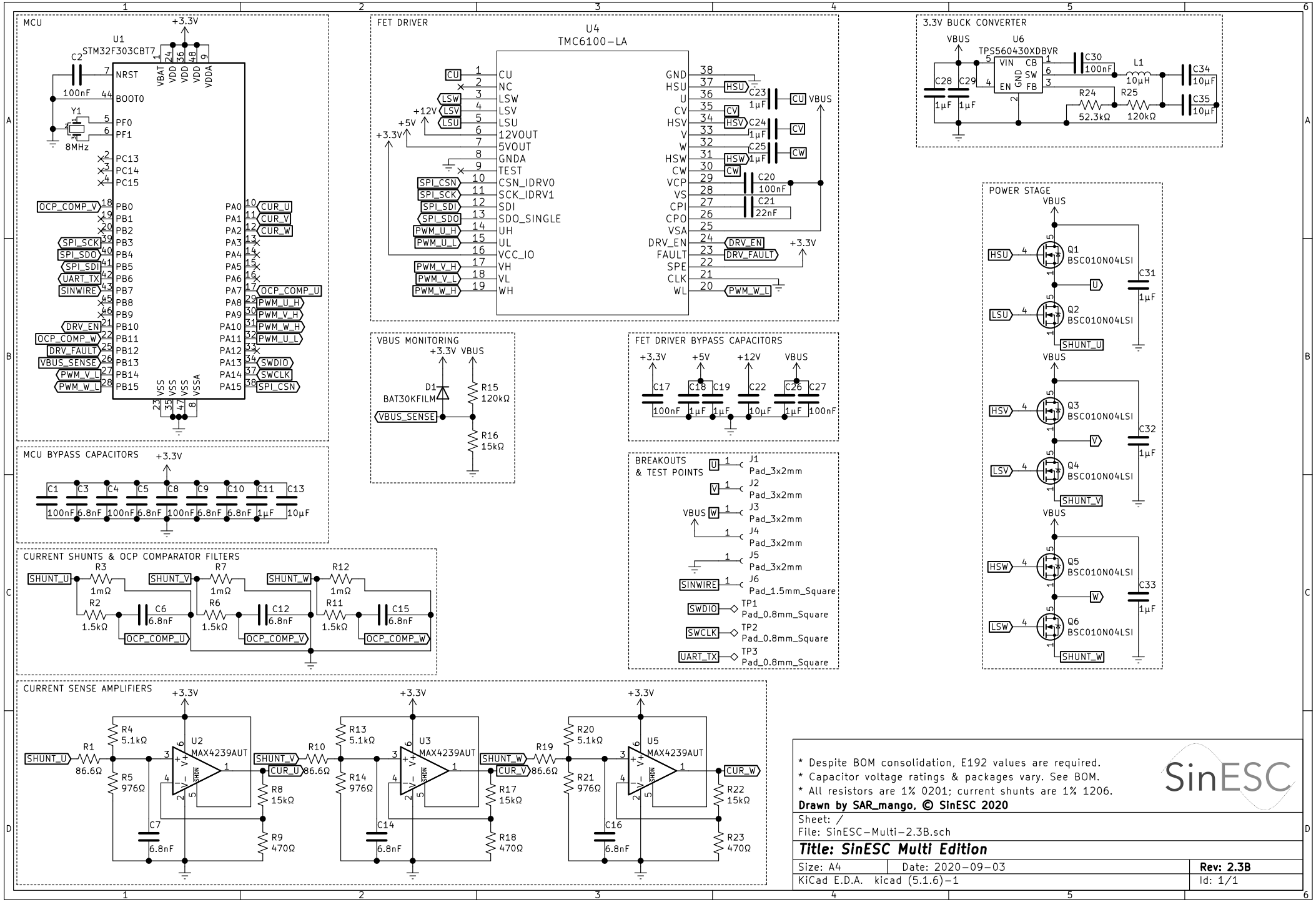
MCU
U1
STM32F303CBT7
+3.3V
C2
100nF
Y1
8MHz
NRST
BOOT0
PF0
PF1
PC13
PC14
PC15
PB0
PB1
PB2
PB3
PB4
PB5
PB6
PB7
PB8
PB9
PB10
PB11
PB12
PB13
PB14
PB15
PA0
PA1
PA2
PA3
PA4
PA5
PA6
PA7
PA8
PA9
PA10
PA11
PA12
PA13
PA14
PA15
VBAT
VDD
VDDA
VSS
VSSA
OCP_COMP_V
SPI_SCK
SPI_SDO
SPI_SDI
UART_TX
SINWIRE
DRV_EN
OCP_COMP_W
DRV_FAULT
VBUS_SENSE
PWM_V_L
PWM_W_L
CUR_U
CUR_V
CUR_W
OCP_COMP_U
PWM_U_H
PWM_V_H
PWM_W_H
PWM_U_L
SWDIO
SWCLK
SPI_CSN
FET DRIVER
U4
TMC6100-LA
CU
NC
LSW
LSV
LSU
12VOUT
5VOUT
GNDA
TEST
CSN_IDRV0
SCK_IDRV1
SDI
SDO_SINGLE
UH
UL
VCC_IO
VH
VL
WH
GND
HSU
U
CV
HSV
V
W
HSW
CW
VCP
VS
CPI
CPO
VSA
DRV_EN
FAULT
SPE
CLK
WL
+12V
+5V
C23
C24
C25
1µF
C20
100nF
C21
22nF
VBUS
3.3V BUCK CONVERTER
U6
TPS560430XDBVR
VIN
CB
SW
FB
GND
EN
C28
C29
1µF
C30
100nF
L1
10µH
C34
10µF
C35
10µF
R24
52.3kΩ
R25
120kΩ
POWER STAGE
Q1
BSC010N04LSI
Q2
BSC010N04LSI
Q3
BSC010N04LSI
Q4
BSC010N04LSI
Q5
BSC010N04LSI
Q6
BSC010N04LSI
C31
C32
C33
SHUNT_U
SHUNT_V
SHUNT_W
VBUS MONITORING
D1
BAT30KFILM
R15
120kΩ
R16
15kΩ
FET DRIVER BYPASS CAPACITORS
C17
C18
C19
C22
C26
C27
100nF
10µF
BREAKOUTS
& TEST POINTS
J1
Pad_3x2mm
J2
Pad_3x2mm
J3
Pad_3x2mm
J4
Pad_3x2mm
J5
Pad_3x2mm
J6
Pad_1.5mm_Square
TP1
Pad_0.8mm_Square
TP2
Pad_0.8mm_Square
TP3
Pad_0.8mm_Square
MCU BYPASS CAPACITORS
C1
C3
C4
C5
C8
C9
C10
C11
C13
6.8nF
1µF
10µF
CURRENT SHUNTS & OCP COMPARATOR FILTERS
R3
R7
R12
1mΩ
R2
R6
R11
1.5kΩ
C6
C12
C15
6.8nF
CURRENT SENSE AMPLIFIERS
U2
U3
U5
MAX4239AUT
R1
86.6Ω
R4
5.1kΩ
R5
976Ω
R8
15kΩ
R9
470Ω
C7
R10
R13
R14
R17
R18
C14
R19
R20
R21
R22
R23
C16
* Despite BOM consolidation, E192 values are required.
* Capacitor voltage ratings & packages vary. See BOM.
* All resistors are 1% 0201; current shunts are 1% 1206.
Drawn by SAR_mango, © SinESC 2020
SinESC
Sheet: /
File: SinESC-Multi-2.3B.sch
Title: SinESC Multi Edition
Size: A4
Date: 2020-09-03
Rev: 2.3B
KiCad E.D.A. kicad (5.1.6)-1
Id: 1/1