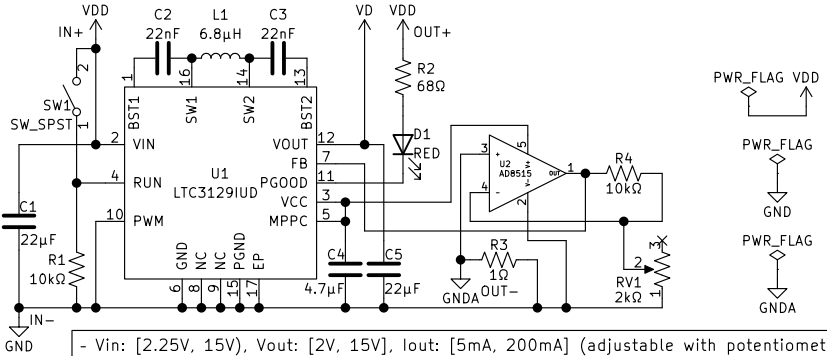

- Vin: [2.25V, 15V], Vout: [2V, 15V], Iout: [5mA, 200mA] (adjustable with potentiometer)
- High Iout and Vout not guaranteed with Vin below 5V or high battery ESR
- Revised to prevent feedback oscillations
- 0.8mm PCB required for Leadlight Pen Host
- Drawn by: E.S.

Sheet: /
File: Universal−Laser−Driver.sch

Universal Laser Driver

Size: User	Date: 2021−09−06	Rev: 1.2
KiCad E.D.A. kicad (5.1.10−1−10_14)		Id: 1/1