ANALYSIS OF DRIVE POWER ALTERNATIVES IN THE PAPER INDUSTRY

Mark D. Weaver, Member, IEEE John R. Holmquist, Senior Member, IEEE
Weyerhaeuser Company
Paper Company Engineering
Tacoma, Washington 98477

Abstract

When considering high horsepower drives for application in the paper industry there are several alternatives: mechanical drive turbines, constant speed electric motors with or without a mechanical variable speed drive, and variable speed electrical drives. The operating cost comparisons of steam turbine drives with motor drives should take into account the impacts on paper mill fuel chargeable to shaft power and utility tie-line flows. These impacts are greatly affected by the availability of back pressure turbine generating capacity in the paper mill powerhouse. An example calculation, comparing a turbine driven line shaft and sectional electric drive on a paper machine rebuild, is shown.

Introduction

At times, steam turbines have been selected to drive paper machine lineshafts and powerhouse fans or pumps when an electric drive was the more economical alternative. Conversely, electric motors have been selected where a significant opportunity for cogeneration exists. The analysis of these alternatives crosses the lines of mechanical and electrical engineering disciplines. The important step in the analysis of these alternatives is to gather the data on the load characteristics and most importantly, the powerhouse configuration of boilers, fuels and turbines. The cost of energy to operate the drive can be combined with maintenance cost, and capital cost to obtain the total cost of ownership for each drive alternate. This total ownership cost combined with consideration of the performance requirements of the process operated by the drive can be used to select the best drive alternate.

This paper addresses the specific problem of comparing steam turbine drives to electrical drives in high horsepower applications (greater than 200 hp). Mechanical or electrical slip energy drives, (e.g., eddy current couplings, hydrodynamic/hydrokinetic drives, wound rotor motor secondary resistor drives) and hydroviscous drives are not considered because they exhibit poor part-load efficiency characteristics. This paper considers only the DC motor drive.

A critical factor in the drive alternative analysis is the configuration of the powerhouse steam supply system. In this analysis, two different powerhouse conditions are examined. In the first condition there is existing, underutilized backpressure turbine generator (T-G) capacity in the powerhouse. In the second condition, T-G capacity is either not installed or fully utilized, and process steam is flowing through Pressure Reducing Valves (PRV). For both powerhouse conditions, the analysis assumes that there is a tie-line with sufficient capacity to handle any additional load.

The objective of this analysis is to identify, for four selected cases, the fuel chargeable to shaft power and the tie-line power associated with the paper machine drive application. Combined with local fuel and power costs, the energy cost impacts of each drive alternative will be known. Some aspects of the analysis deserve additional discussion.

Process Description

In modern paper mills, boiler steam may be generated at pressures of 600 to 1800 psig and 600 to 900°F. Typically, paper mills use process steam at 30 to 200 psig. Two methods are used to reduce steam pressure: expansion across a valve (throttling), and expansion in a steam turbine.

Throttling and Reversibility

Throttling is illustrated in Figure 1. This is an isenthalpic expansion: the heat content of the steam entering the valve is the same as that of the exiting steam. Enthalpy is reported in English units in British Thermal Units (Btu) per pound of steam. Since no work is extracted from the flow, throttling is also an irreversible process. While the energy efficiency of this process is 100%, work potential is wasted in throttling. The advantage of a turbine drive will result when work recovery is increased as a result of its use.

In the case of electrical systems, the flowing "fluid" is electrical current. Current flowing through a resistor is a case of an irreversible process because no work is done (Figure 2). If the current flows through a counter e.m.f., work is done and the process is reversible. An electric motor illustrates this case. In a motor, the current enters the higher voltage side and exits the lower side of the voltage source (Figure 3). Since the polarity of the counter e.m.f. can be reversed, thus causing work to to be transformed into electrical energy (Figure 4), this is a reversible process (since there are losses, it is not a completely reversible process). Electric machines are typically 93% to 98% efficient.

Turbine Performance

For this discussion, work efficiency is the ratio of extracted work to the available work in the flow of energy through the valves or turbines. Powerhouse turbines are typically 75% efficient in converting the work available in the steam to shaft power for the generator to convert to electrical energy. In a single stage, single valve mechanical drive turbine, the efficiency is on the order of 50%. In addition, there are energy losses associated with turbines due to radiation, friction, windage, leakage, etc. These losses are estimated at approximately 2% of shaft power recovered in the turbine.

Steam flow is varied by throttling some or all of the steam entering the turbine. In a single stage, single valve turbine, all the steam is throttled in a single valve ahead of the turbine. This throttling action contributes to the relatively poor work efficiency of this turbine. Low work efficiency is also due to the high pressure drop for which the stage is designed. As a result, a large amount of steam is required in order to create the same amount of work as a turbine with a higher work efficiency. These turbines are normally applied in the range of 200 to 1000 horsepower. Much larger than this, economics of work requires the application of multi-valve, multi-stage turbines.

Larger turbines, including powerhouse turbines, use a multi-valve, multi-stage arrangement. The flow through the turbine is varied by throttling only some of the steam flow. As the demand for steam increases, valves open sequentially in such a way that some valves are fully open and only one valve is throttling at any one time. As a consequence of this multi-valve arrangement, the characteristic curve of the turbine (flow versus horsepower) is complex. This curve (Willans Line) is usually shown as a smooth straight line for single speed turbines. The actual characteristic (Figure 5) shows cusps for each valve as they throttle through their range and another valve opens.

PPIC-88-561

0190-2172/88/0000/0094 $1.00 © 1988 IEEE

Authorized licensed use limited to: KIT Library. Downloaded on July 22,2025 at 13:29:37 UTC from IEEE Xplore. Restrictions apply.

Adjustable Speed Turbines

In an adjustable speed turbine, the Willans Line is curved. Turbine nozzles and blades are designed for a particular steam velocity acting at a characteristic angle. When the turbine is operated at the speed where the angle of the steam jet matches the apparent angle of the moving blades, the turbine is highly efficient. If the turbine is operated at a speed other than the design speed, the apparent angle of the steam jet does not match the design angle of the moving blades (Figure 6). The effect of this is to increase the amount of steam flow required for a given amount of work at the turbine shaft.

Figure 7 shows that at the low power end of the curve, the slope of the curve is almost 0. The actual power output of the turbine is dependent on the speed-torque characteristic of the load. If the turbine is driving a pump or a fan load, the load on the turbine will drop off as the cube of the speed. For example, a fan load will require 1/8 of the power at half speed that it requires at full speed. In this case, the turbine valve will be adjusted to the low end of the curve. In this region, more steam is required to make a unit of power than at the full load end. This property makes the turbines extremely difficult to control at low loads. In effect, the power gain of the turbine varies with the speed of the turbine. The case of an adjustable speed, constant torque load is not as bad as a fan load. In this case, half speed would represent about half the load on the turbine. The power gain of the turbine at half power is much closer to the power gain of the fully loaded turbine.

Incremental Efficiency

When existing utility equipment is incrementally loaded, it is important to use the incremental efficiency rather than the absolute efficiency. Incremental efficiency is the slope of the output/input curve at the operating load of the equipment. If the increment is a large percentage of the total load, then the average incremental efficiency is the slope of the straight line drawn through the points on the output/input curve corresponding to the output increment (Figure 8). Examples of such utility equipment might be electric transformers. When an electric drive is to be compared to a steam turbine drive, the transformer supplying the drive will be loaded in an incremental fashion. In this case, only the load losses due to the increment of current that will flow into the drive through the transformer should be charged against the electric drive alternative. On the other hand, if the transformer used to supply the drive is fully dedicated to the drive, then the absolute losses of the transformer should be charged against the electric drive alternative. This would include the no-load or fixed losses of the transformer, as well as the load losses of the transformer. By the same token, if an increment in steam flow from the boiler is required by the process addition, then the losses in the boiler resulting from that load addition are to be charged against that alternative when making projections of operating cost. This rule of incremental losses versus absolute losses should be applied when making evaluations.

It is possible to assign a proportional amount of the utility equipment's fixed losses to each user of the utility, but this is impractical when an addition to an existing mill is being evaluated. In the same vein, the proportional capital cost of the utility equipment could be distributed to the utility users. In some mills, the utilities are all operated by the powerhouse department. This department will often charge the internal users in a paper mill a fee for the use of utilities in much the same way that an electric utility charges customers for electric power. The fee includes components of energy cost, as well as the capital cost of the powerhouse equipment. This makes the evaluation of drive alternatives outside the powerhouse envelope much easier. In most mills the accounting procedures are oriented towards the total mill operating cost, thus forcing the use of incremental losses in utility equipment in alternative evaluations. The fixed losses and the depreciated value of the utility assets are already included in the mill asset base.

The energy demand of auxiliary equipment, such as drive room air conditioning and motor ventilation, was not considered in the analysis. These energy users would impact an electric drive much more than the turbine-lineshaft drive. On the other hand, the calculations were based on operating the paper machine at a high average speed. The average speed may be much lower. In an actual operating situation, the performance of the drive turbine through its expected load range needs to be considered.

Results of Alternatives Analysis

A good example of an adjustable speed-constant torque load is a paper machine. In Appendix I, the energy impacts of four drive alternatives for a typical paper machine rebuild are calculated. The four alternatives are:

Case 1 - Electric sectional drive with powerhouse turbine-generator capacity available.

Case 2 - Lineshaft turbine drive with powerhouse turbine-generator capacity available.

Case 3 - Electric sectional drive without powerhouse turbine-generator capacity available.

Case 4 - Lineshaft turbine drive without powerhouse turbine-generator available.

As discussed above, the results of the analysis consist of both the fuel energy and the electrical energy impacts of each alternative. The fuel required to serve the paper machine dryer heatsink is not included as this fuel is the same in all cases. The fuel chargeable to shaft power accounts for electric generation at the powerhouse turbine-generator and for the machine drive turbine.

	Fuel Chargeable to Shaft Power, Btu/hr	Electric Power Consumed (Produced) Net kW
CASE 1 Electric Drive with Turb.-Gen. Capacity Available	12.3×10^6	(1,319)
CASE 2 Turbine Drive with Turb.-Gen. Capacity Available	8.65×10^6	(522)
CASE 3 Electric Drive without Turb.-Gen. Capacity Available	0	1,415
CASE 4 Turbine Drive without Turb.-Gen. Capacity Available	4.18×10^6	471

In an actual analysis of drive alternatives, only two of the four cases investigated would be considered: either Cases 1 & 2 or Cases 3 & 4. The difference between these two sets of cases is the presence or absence of unutilized turbine generator capacity in the powerhouse. A turbine-generator can take advantage of the heatsink and produce valuable surplus work in the form of electric energy. This energy is

Authorized licensed use limited to: KIT Library. Downloaded on July 22,2025 at 13:29:37 UTC from IEEE Xplore. Restrictions apply.

used to displace tie-line electric energy flows and thus reduces the overall cost of operating the total mill.

Using the table data, the fuel and tie-line flows can be costed using local costs of fuel and purchased power. These results will vary widely with local values

Finally, in the decision to choose one alternative over the other, the question of operating cost has to be weighed with other factors, including capital, flexibility, operator experience, controllability, maintenance capability, speed of troubleshooting, mean time to repair, etc.

Conclusions

This paper has dealt with the problem of determining the energy impacts on operating cost of selected drive alternatives. A methodology was developed as outlined below.

1. Determine all the practical solutions that would provide both the shaft power required by the process and the heat required by the process. These solutions become the cases to be analyzed.

2. Determine or derive the efficiencies, incremental efficiencies, incremental losses, or losses of each piece of equipment in each case. These values should be found for each likely load condition in the duty cycle of the process.

3. Calculate the energy inputs for each case at the "metering points" for the mill. These metering points are usually the electric tie-line to the serving utility and the highest cost fuel flow to the power boiler.

4. Weigh each energy input at the various load conditions for each case according to the duty cycle of the process.

5. Using the the top incremental costs for purchased fuel and power, find the operating cost of each alternative for the life of the process plant.

6. Consider the sensitivity of the total analysis to the various assumptions; e.g., efficiencies, duty cycle, escalations, costs. An example of this would be to consider the impact of mechanical drive turbine efficiency. It may be that a multi-stage, multi-valve mechanical drive turbine would be the better choice over an electric drive where an electric drive would be the better choice over a single-stage, single valve mechanical drive turbine. Another area to look at is the optimization of the efficiency of the electric drive for a particular duty cycle.

Appendix I - Analysis of Alternatives

Paper Machine Drive - Adjustable Speed/Constant Torque

In this case the two alternatives to be considered are as follows:

1. Differential lineshaft with a steam turbine drive and an electric helper drive.

2. Complete electric sectional DC drive system.

Data:

Section	Load @ 80% Speed (hp) NRL	Load @ 100% Speed (hp) NRL	Motor Size (hp) RDC
Couch	230	288	300
Wire Turning	230	288	300
First Press	127	159	175
Second Press	187	234	250
Third Press	230	288	300
First Dryer	75	94	100
Second Dryer	134	168	175
Third Dryer	70	88	100
Top Size Press	56	70	75
Bottom Size Press	56	70	75
Fourth Dryer	110	138	150
Calender	105	132	150
Reel	30	38	40
Paper Rolls	10	12	
TOTAL	1,650	2,068	

Paper Machine Process Heat Requirement:
- 1×10^7 Btu/ton

Paper Machine Production @ 80% Speed:
- 10.7 ton/hr

Assumptions

- All process heat requirements will be met by 140 psig steam.

- Desuperheating water requirements will be provided by condensate from the dryer drainage system. Desuperheating will take place within the confines of the process heat sink (paper machine).

- The condensate mass returned from the process heat sink to the powerhouse is equal to 100% of the steam in-flow mass (never true but not significant).

- The condensate will be at saturation temperature at atmospheric pressure.

- Boiler header steam conditions are 600 psig/625°F.

- Thermo-compression motive steam is not required at the paper machine.

- The lineshaft drive alternative will require that one-third of the shaft load be met by an electric helper drive.

- The analysis will consider the paper machine shaft power requirements at an average machine speed of 80% of gear-in speed.

- The paper machine dryer sections represent the process heat sink.

Data and Constants

- Enthalpy of intermediate pressure steam - 1,214 Btu/lb - 140 psig/390°F.

- Enthalpy of returned condensate - 180 Btu/lb - 14.7 psig/212°F.

- Enthalpy of powerhouse high-pressure steam - 1,306 Btu/lb 600 psig/625°F.

Authorized licensed use limited to: KIT Library. Downloaded on July 22,2025 at 13:29:37 UTC from IEEE Xplore. Restrictions apply.

- Conversion constants:
  - 1 hp = 0.746 kW
  - 1 kW = 3,413 Btu/hr
  - 1 hp = 2,546 Btu/hr

- Powerhouse turbine-generator average, actual water rate - 37.1 lb/kW-hr - 600 psig/625°F to 140 psig (71% work efficiency).

- The work efficiency of the single valve, single stage mechanical drive turbine - 40%.

- Ten percent of the turbine-generator output is consumed by the powerhouse auxiliaries.

- The fuel energy chargeable to generated electrical power is based on a generator efficiency of 98%.

  E = (3413 Btu/kW-hr)(1/Gen.Eff.)(1/Blr.Eff.)(1+Blr.Aux.)

- The boiler thermal efficiency is 85% on oil and 65% on hog fuel.

- The fuel energy chargeable to drive turbine shaft power is:

  E = (2546 Btu/hp-hr)(1/Blr.Eff.)(1+Blr.Aux.)

Case 1: Electric Drive - Powerhouse Turbine-Generator Capacity is Available.

A. Find the paper machine steam flow requirement.
Flow = 107 Btu/ton x 10.7 ton/hr x 1/(1214 Btu/lb - 180 Btu/lb)
Flow = 103,482 lb/hr

B. Find the cogenerated electric power produced by the flow of steam through the turbine generator.
kW = (Flow/Water Rate) x Gen. eff.
kW = (**103,482 lb/hr**/37.1 lb/kWhr) x 0.98
kW = 2,734 kW

C. Find the fuel energy chargeable to electric power (the top increment of fuel is fuel oil).
Btu/hr = 3,413 Btu/kWhr x (1/Gen.eff.) x (1 / Blr.eff.) x (1 + Blr. Aux.) x **2,734 kW**
Btu/hr = 3,413 x (1/.98) x (1/.86) x (1 + 0.1) x **2,734**
Btu/hr = 12.3×10^6

D. Find the mechanical power in kW required at the paper machine journals.
kW = 1,650 hp x 0.746 kW/hp
kW = 1,231 kW

E. Find the total efficiency of the electrical system back to the powerhouse bus.
$Eff_{tot} = Eff_{gears} \times Eff_{motor} \times Eff_{bridge} \times Eff_{trans}$
Eff_{tot} = 0.97 x 0.91 x 0.99 x 0.99
Eff_{tot} = 0.87

F. Find electrical power input to the drive system at the powerhouse bus.
kW = **1,231 kW/0.87**
kW = 1,415 kW

G. Find the net electrical power produced or consumed by the paper machine drive system.
$kW_{net} = kW_{prod.} - kW_{cons.}$
kW_{net} = **2,734 kW - 1,415 kW**
kW_{net} = 1.319 kW (produced)

This case is illustrated in Figure number 9.

Case 2: Steam Turbine Drive - Powerhouse Turbine Generator Capacity is Available.

A. Find the hp required out of the lineshaft at the machine journals (2/3 of total drive power).
hp = 2/3 x 1,650 hp
hp = 1,100 hp

B. Find the power required from the lineshaft drive turbine.
hp_{out} = **1,100 hp**/[eff_{gears} x $eff_{differential}$ x $eff_{transfer\ case}$ x $eff_{line\ shaft}$]
hp_{out} = **1,100 hp**/[0.97 x 0.93 x 0.97 x 0.99]
hp_{out} = 1,270 hp

C. Find fuel energy chargeable to mechanical shaft power (the top increment of fuel is fuel oil)
Btu/hr = (2,546 Btu/hp-hr) x (1/Blr. eff.) x (1 + Blr.Aux.) x **1,270 hp**
Btu/hr = 2,546 x (1/0.85) x (1 + 0.10) x **1,270**
Btu/hr = 4.18×10^6 Btu/hr

D. Find the enthalpy of the drive turbine outlet steam.
Inlet Conditions - 600 psig/625°F
Outlet Conditions - 140 psig

H_{inlet} = 1,306 Btu/lb
H_{outlet} = 1,178 Btu/lb (assuming isentropic expansion)
$\kappa H_{isent.}$ = 1,306 - 1,178
$\kappa H_{isent.}$ = 128 Btu/lb
$\kappa H_{act.}$ = **128 Btu/lb** x Turb. eff.
$\kappa H_{act.}$ = **128 Btu/lb** x 0.40
$\kappa H_{act.}$ = 51.2 Btu/lb
H_{outlet} = 1,306 Btu/lb - **51.2 Btu/lb**
H_{outlet} = 1,255 Btu/lb (actual steam enthalpy)

E. Find the drive turbine's actual steam rate.
SR = 2,546 Btu/hp-hr/κH_{actual}
SR = 2,546/**51.2**
SR = 49.92 lb/hp-hr

F. Find the drive turbine steam flow.
Q_{steam} = SR x hp_{out}
Q_{steam} = **49.92 lb/hp-hr** x **1,270 hp**
Q_{steam} = 63,398 lb/hr

G. Find the heat to the paper machine dryers from the drive turbine exhaust.
Btu/hr = Q_{steam} x [H_{outlet} - $H_{condensate}$]
Btu/hr = **63,398 lb/hr** x [**1,255** - 180]
Btu/hr = 68.15×10^6 Btu/hr

H. Find the balance of heat required by the paper machine dryers.
Btu/hr = $Heat_{total}$ - $Heat_{turbine}$
Btu/hr = [10.7 Ton/hr x 10^7 Btu/ton] - **68.15×10^6**
Btu/hr = 107.0 x 10^6 Btu/hr - **68.15×10^6 Btu/hr**
Btu/hr = 38.85×10^6 Btu/hr

I. Find the steam flow through the powerhouse turbine-generator required to make up the balance of heat needed to dry paper, use 140 psig steam.
Q_{stm} = **38.85×10^6 Btu/hr**/[H_{140} - H_{cond}]
Q_{stm} = **38.85×10^6 Btu/hr**/[1,214 Btu/lb - 180 Btu/lb]
Q_{stm} = 37,573 lb/hr

J. Find the cogenerated electric power produced at the powerhouse turbine generator.
kW = **37,573 lb/hr**/[SR_{140} x Gen. eff.]
kW = **37,573 lb/hr**/[37.1 lb/kW-hr x .98]
kW = 992.5 kW

Authorized licensed use limited to: KIT Library. Downloaded on July 22,2025 at 13:29:37 UTC from IEEE Xplore. Restrictions apply.

K. Find the fuel energy chargeable to generated electric power.
Btu/hr = 3,413 Btu/kW-hr x (1/Gen. eff.) x (1/Blr.eff.) x (1 + Blr.Aux.) x **992.5 kW**
Btu/hr = 3,413 x (1/0.98) x (1/0.86) x 1.10 x **992.5 kW**
Btu/hr = 4.47 x 10^6 Btu/hr

L. Find the total fuel energy chargeable to both mechanical and electric power.
Btu/hr = **4.47 x 10^6 Btu/hr** + **4.18 x 10^6 Btu/hr**
Btu/hr = 8.65 x 10^6 Btu/hr

M. Find the total power input to the paper machine from the helper drives.
hp_{hlp} = 1/3 x hp_{tot}
hp_{hlp} = 1/3 x 1,650 hp
hp_{hlp} = 550 hp

N. Find the total work efficiency of the electrical helper drive system from the machine journals back to the powerhouse bus.
Eff_{tot} = Eff_{gear} x Eff_{motor} x Eff_{bridge} x Eff_{trans}
Eff_{tot} = 0.97 x 0.91 x 0.99 x 0.99
Eff_{tot} = 0.87

O. Find the electrical power input to the helper drive at the powerhouse bus.
kW = **550 hp** x 0.746 kW/hp x (1/Eff_{tot})
kW = **550 hp** x 0.746 kW/hp x (1/0.87)
kW = 471 kW

P. Find the net electrical power produced or consumed by the paper machine drive system.
kW_{net} = $kW_{prod.}$ - $kW_{cons.}$
kW_{net} = **992.5 kW - 471 kW**
kW_{net} = 521.5 kW

This case is illustrated in Figure number 10.

Case 3: Electric Drive with no Turbine Generator Capacity Available.

A. Find electrical power in kW at the machine journals.
kW = 1,650 hp x 0.746 kW/hp
kW = 1,231 kW

B. Find the total efficiency of the electrical system back to the powerhouse bus.
Eff. = Eff_{gears} x Eff_{motors} x Eff_{drive} x Eff_{trans}
Eff. = 0.97 x 0.91 x 0.99 x 0.99
Eff. = 0.87

C. Find the electrical power input ot the drive system at the powerhouse bus.
kW = **1,231 kW**/Eff.
kW = **1,231 kW/0.87**
kW = 1,415 kW

This case is illustrated in Figure number 11.

Case 4: Steam Turbine Drive Without Turbine-Generator Capacity Available.

A. Find the hp required out of the lineshaft at the machine journals (2/3 of total drive power).
hp = 2/3 x 1,650 hp
hp = 1,100 hp

B. Find the power required from the lineshaft drive turbine.
hp_{out} = **1,100 hp**/[eff_{gears} x $eff_{differential}$ x $eff_{transfer\ case}$ x $eff_{lineshaft}$]
hp_{out} = **1,100 hp**/[0.97 x 0.93 x 0.97 x 0.99]
hp_{out} = 1,270 hp

C. Find fuel energy chargeable to mechanical shaft power (the top increment of fuel is fuel oil).
Btu/hr = (2,546 Btu/hp-hr) x (1/Blr. eff.) x (1 + Blr.Aux.) x **1,270 hp**
Btu/hr = 2,546 x (1/0.85) x (1 + 0.10) x **1,270**
Btu/hr = 4.18 x 10^6 Btu/hr

D. Find the total power input to the paper machine from the helper drives.
hp_{hlp} = 1/3 x hp_{tot}
hp_{hlp} = 1/3 x 1,650 hp
hp_{hlp} = 550 hp

E. Find the total work efficiency of the electrical helper drive system from the machine journals back to the powerhouse bus.
Eff_{tot} = Eff_{gear} x Eff_{motor} x Eff_{bridge} x Eff_{trans}
Eff_{tot} = 0.97 x 0.91 x 0.99 x 0.99
Eff_{tot} = 0.87

F. Find the electrical power input to the helper drive at the powerhouse bus.
kW = **550 hp** x 0.746 kW/hp x (1/Eff_{tot})
kW = **550 hp** x 0.746 kW/hp x (1/0.87)
kW = 471 kW

This case is illustrated in Figure number 1.

Authorized licensed use limited to: KIT Library. Downloaded on July 22,2025 at 13:29:37 UTC from IEEE Xplore. Restrictions apply.

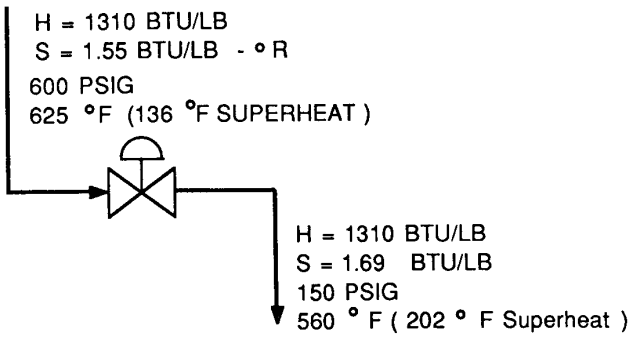

Fig. 1 Throttling

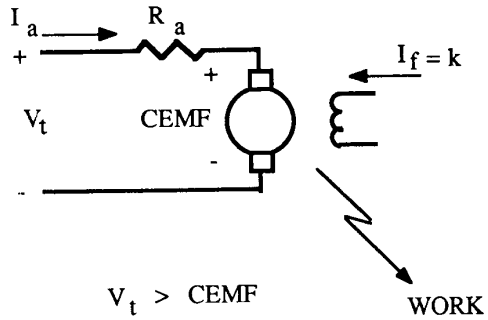

$V_t > CEMF$

$P_{in} = I_a V_t$

$P_{out} = CEMF * I_a$

$P_{Loss} = P_{in} - P_{out}$

$P_{Loss} = I_a^2 R_a$

Fig. 3 Electric Machine (Motor)

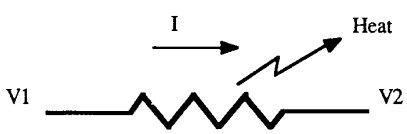

$P_{in} = V_1 I$

$P_{out} = V_2 I$

$P_{Loss} = P_{in} - P_{out}$

$P_{Loss} = I^2 R$

Fig. 2 Electrical Resistance

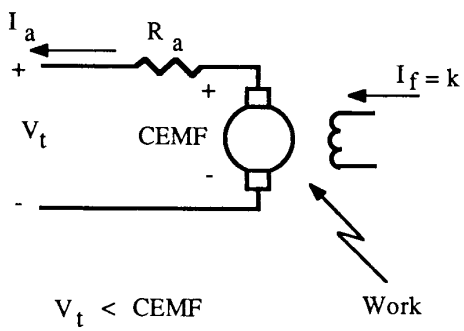

$V_t < CEMF$

$P_{out} = I_a V_t$

$P_{in} = CEMF * I_a$

$P_{Loss} = P_{in} - P_{out}$

$P_{Loss} = I_a^2 R_a$

Fig. 4 Electric Machine (Generator)

Authorized licensed use limited to: KIT Library. Downloaded on July 22,2025 at 13:29:37 UTC from IEEE Xplore. Restrictions apply.

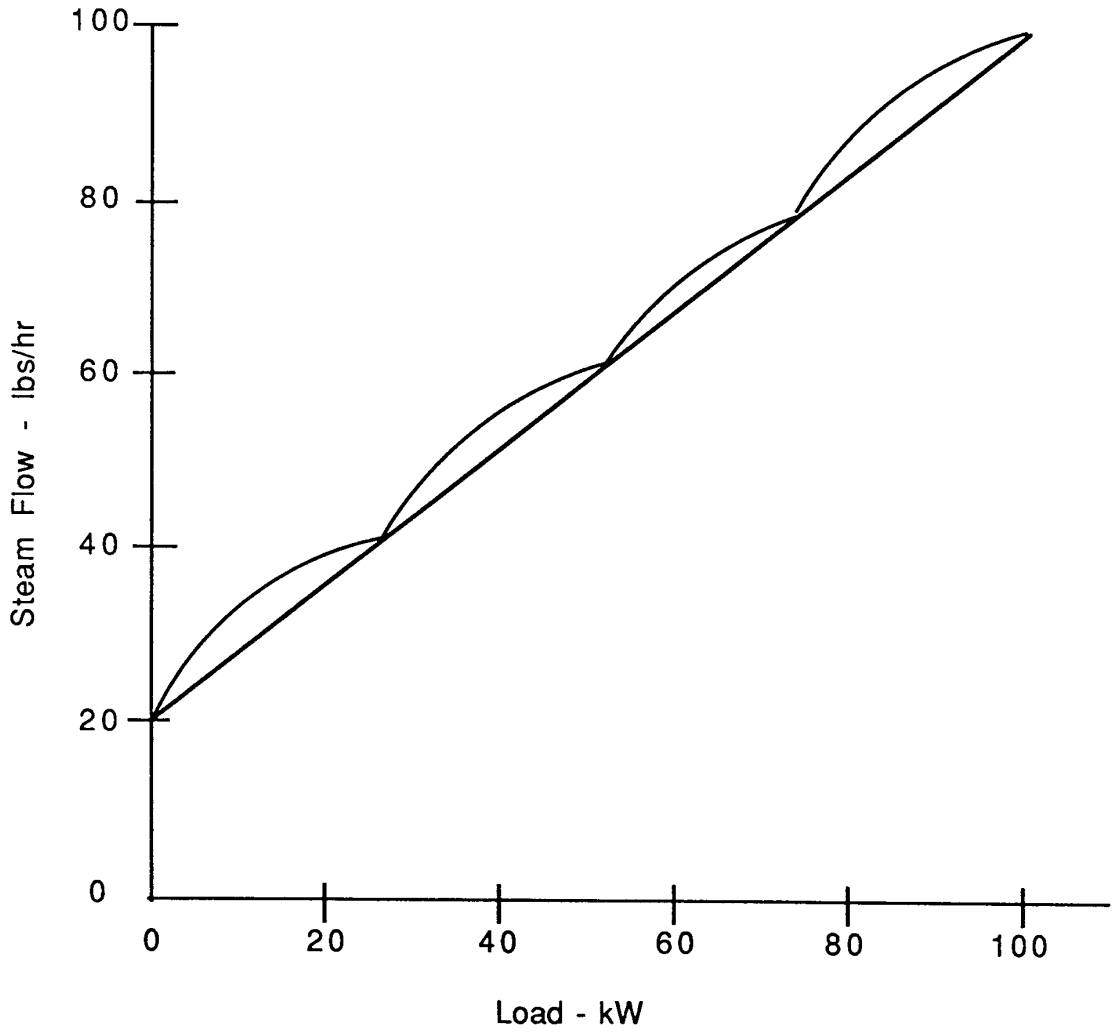

Fig. 5 Loci of control valve opening points.

Authorized licensed use limited to: KIT Library. Downloaded on July 22,2025 at 13:29:37 UTC from IEEE Xplore. Restrictions apply.

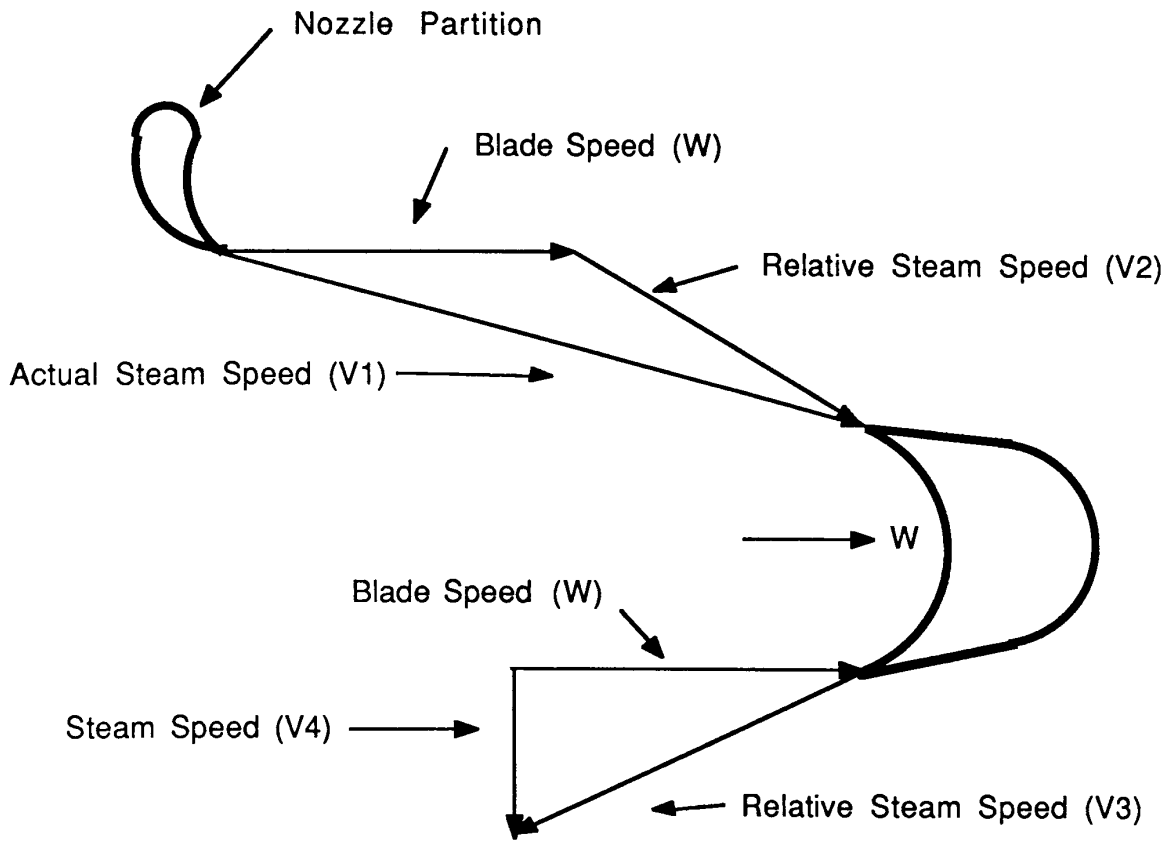

Absolute Steam Velocity = Vo

Bucket Speed = W

Relative Steam Velocity V2 = (Vo - W)

Actual Steam Velocity = V1

Nozzle Velocity Coefficient = V1/Vo

$$\text{Stage Efficiency} = \frac{V1^2 - V2^2 + V3^2 - V4^2}{Vo^2}$$

Fig. 6 Velocity diagram for a typical single row stage.

Authorized licensed use limited to: KIT Library. Downloaded on July 22,2025 at 13:29:37 UTC from IEEE Xplore. Restrictions apply.

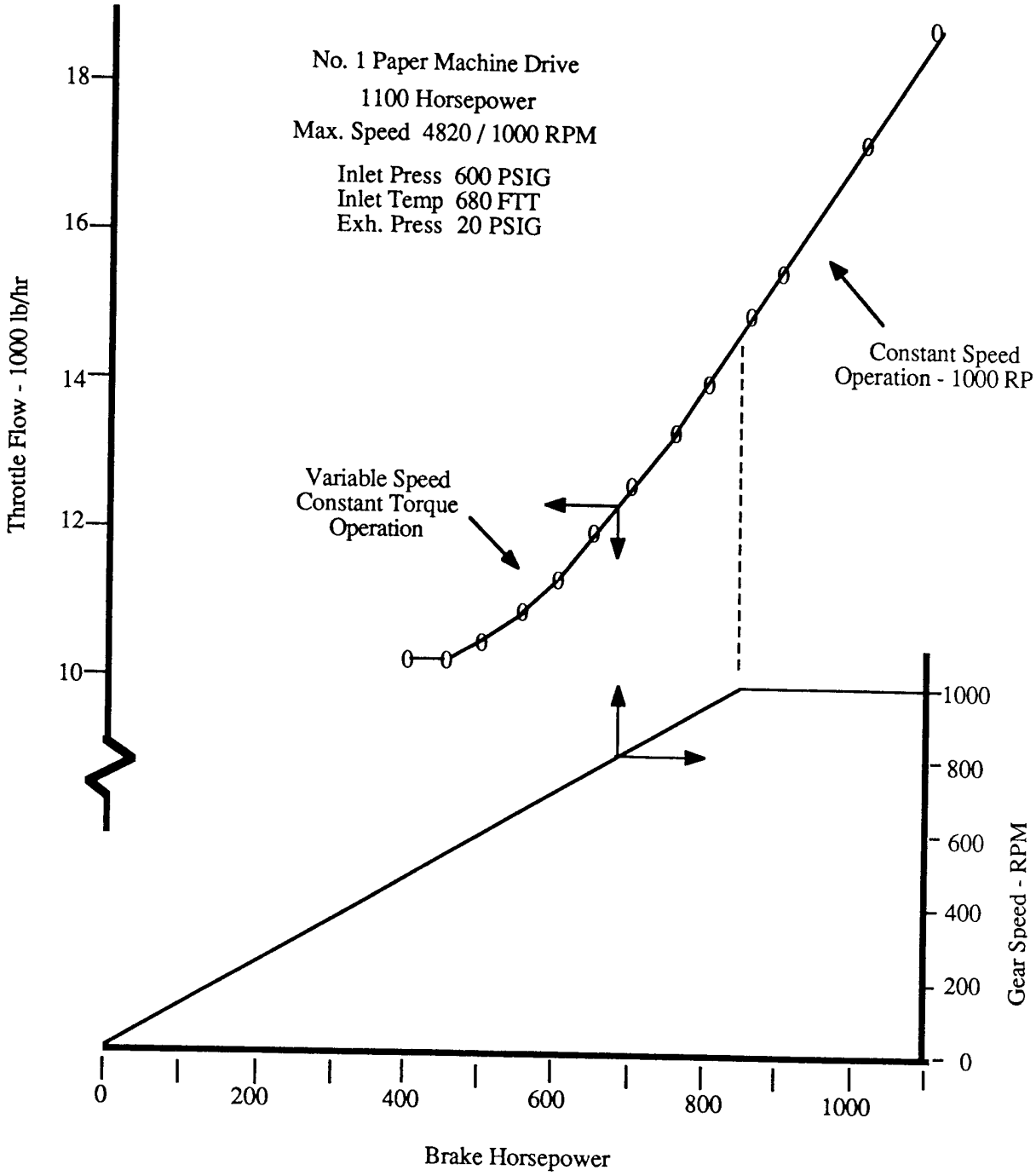

Fig. 7 Variable Speed Turbine

Authorized licensed use limited to: KIT Library. Downloaded on July 22,2025 at 13:29:37 UTC from IEEE Xplore. Restrictions apply.

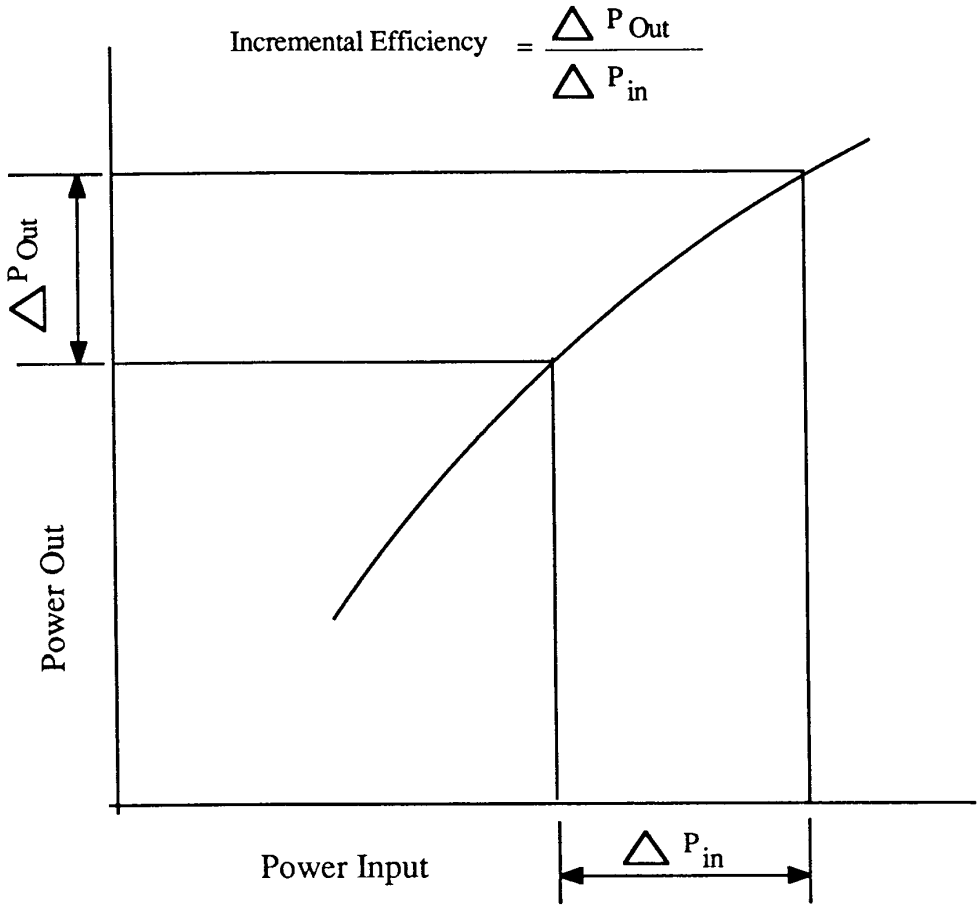

Fig. 8 Incremental Efficiency

Authorized licensed use limited to: KIT Library. Downloaded on July 22,2025 at 13:29:37 UTC from IEEE Xplore. Restrictions apply.

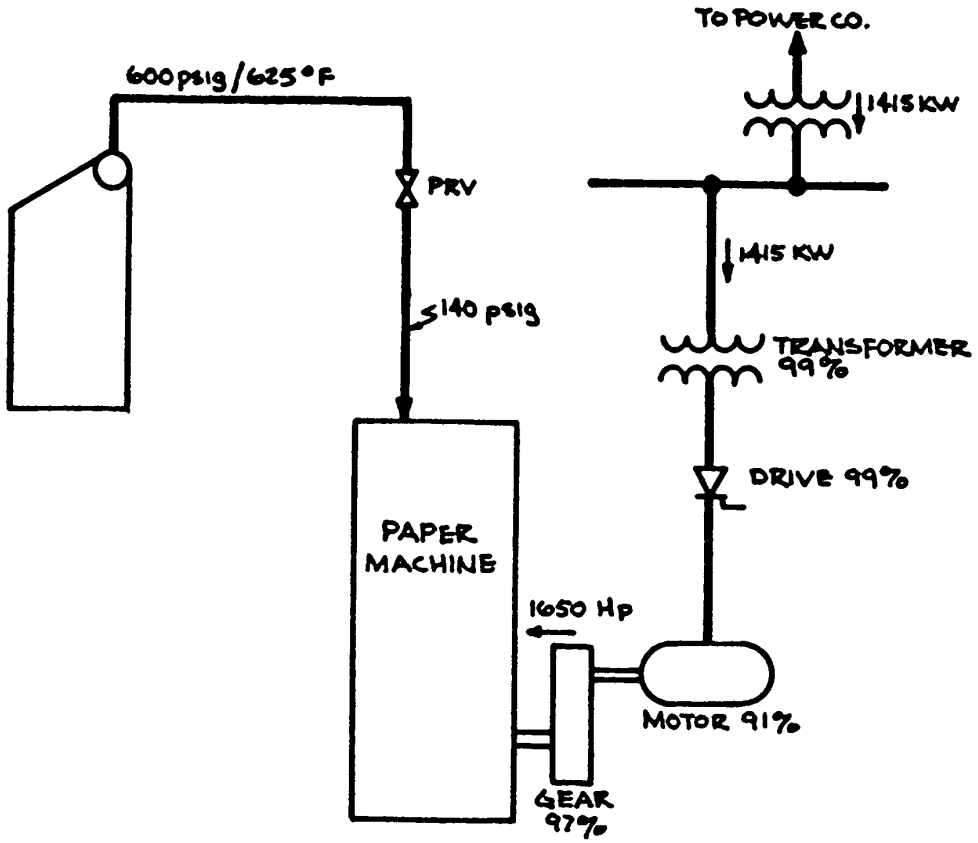

CASE 1

Fig. 9 Paper machine sectional electric drive with powerhouse turbine generator capacity available.

Authorized licensed use limited to: KIT Library. Downloaded on July 22,2025 at 13:29:37 UTC from IEEE Xplore. Restrictions apply.

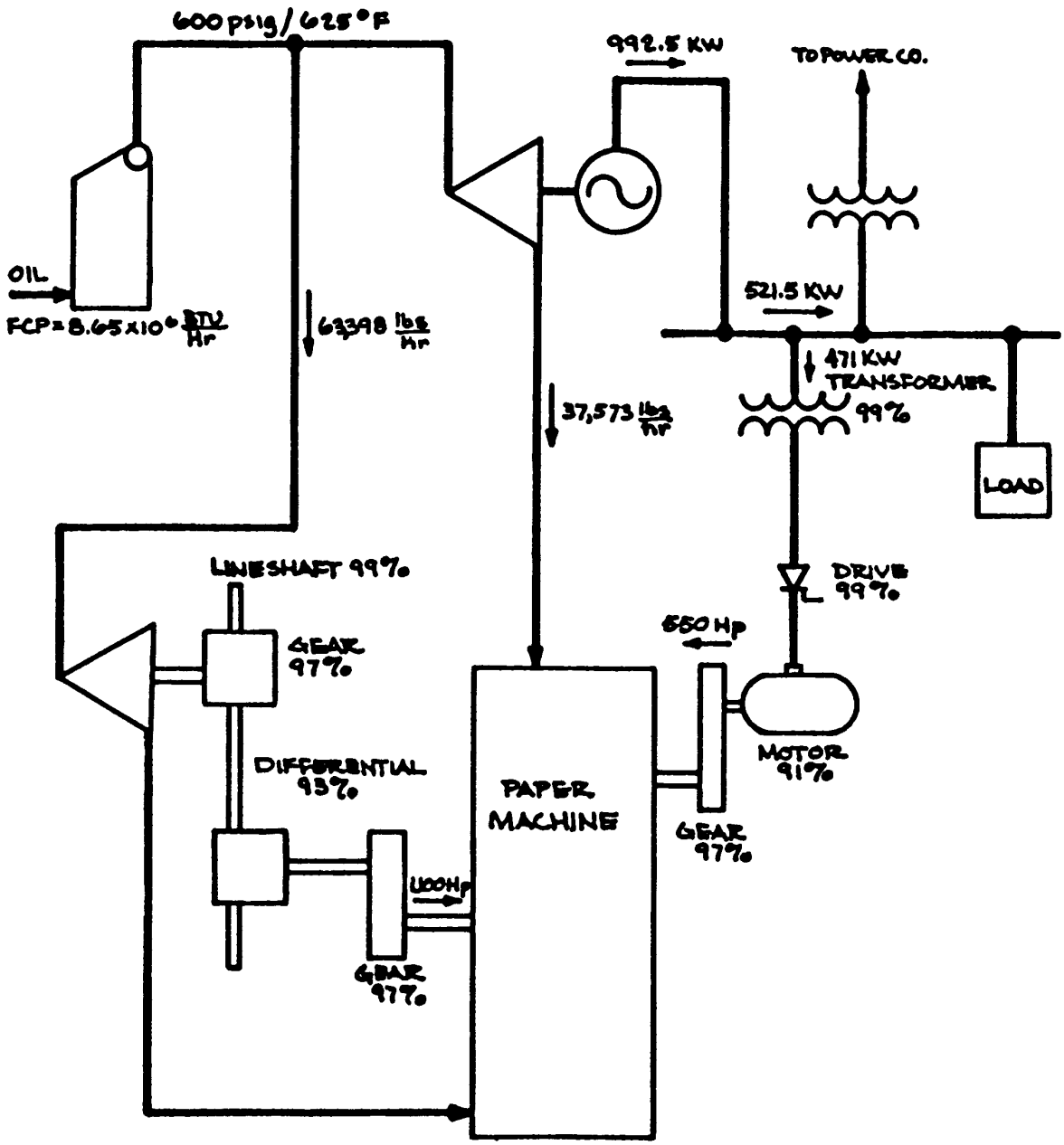

CASE 2

Fig. 10 Paper machine lineshaft with steam turbine drive with powerhouse turbine generator capacity available.

Authorized licensed use limited to: KIT Library. Downloaded on July 22,2025 at 13:29:37 UTC from IEEE Xplore. Restrictions apply.

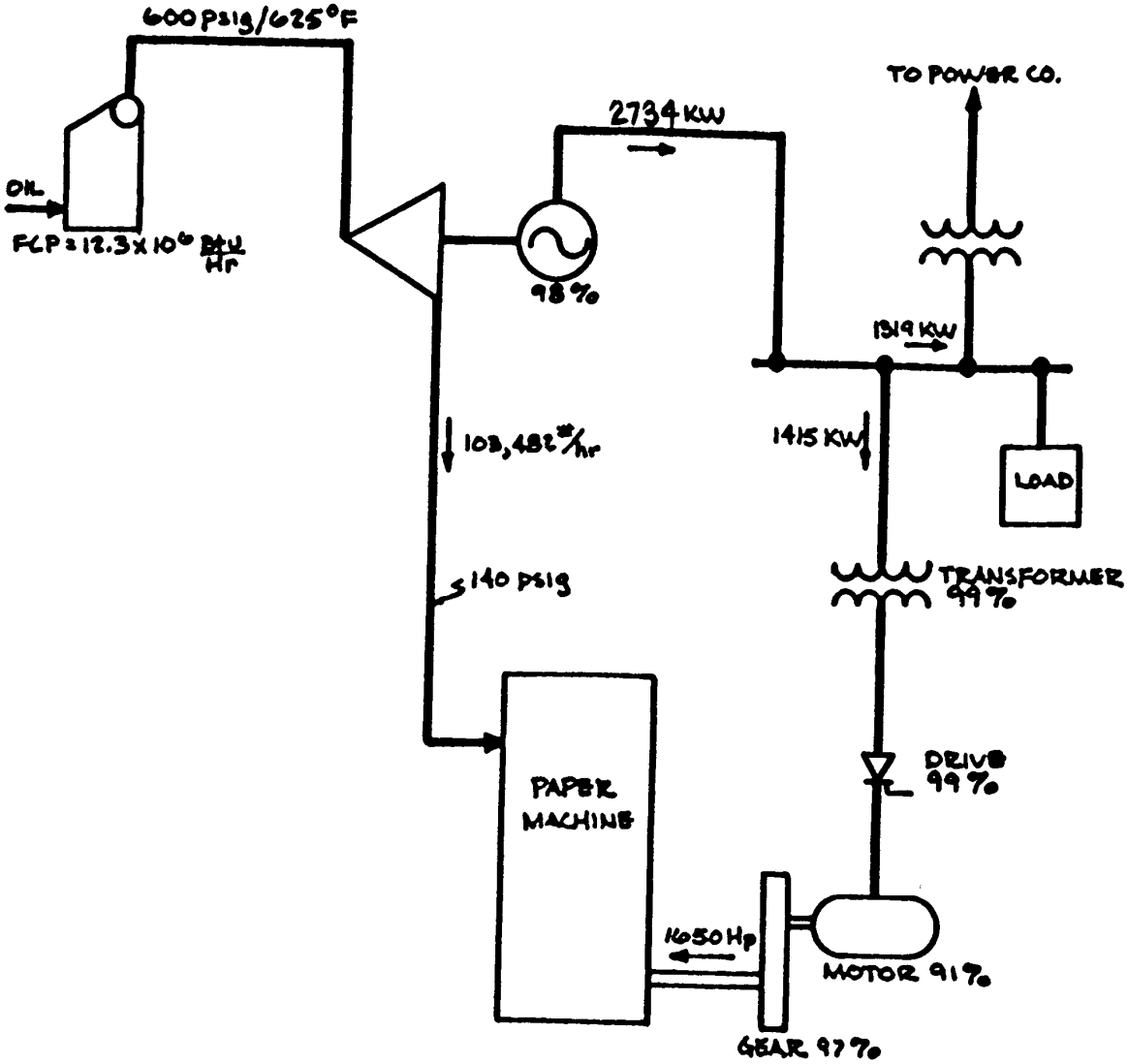

CASE 3

Fig. 11 Paper machine sectional electric drive without power house turbine generator capacity available.

Authorized licensed use limited to: KIT Library. Downloaded on July 22,2025 at 13:29:37 UTC from IEEE Xplore. Restrictions apply.

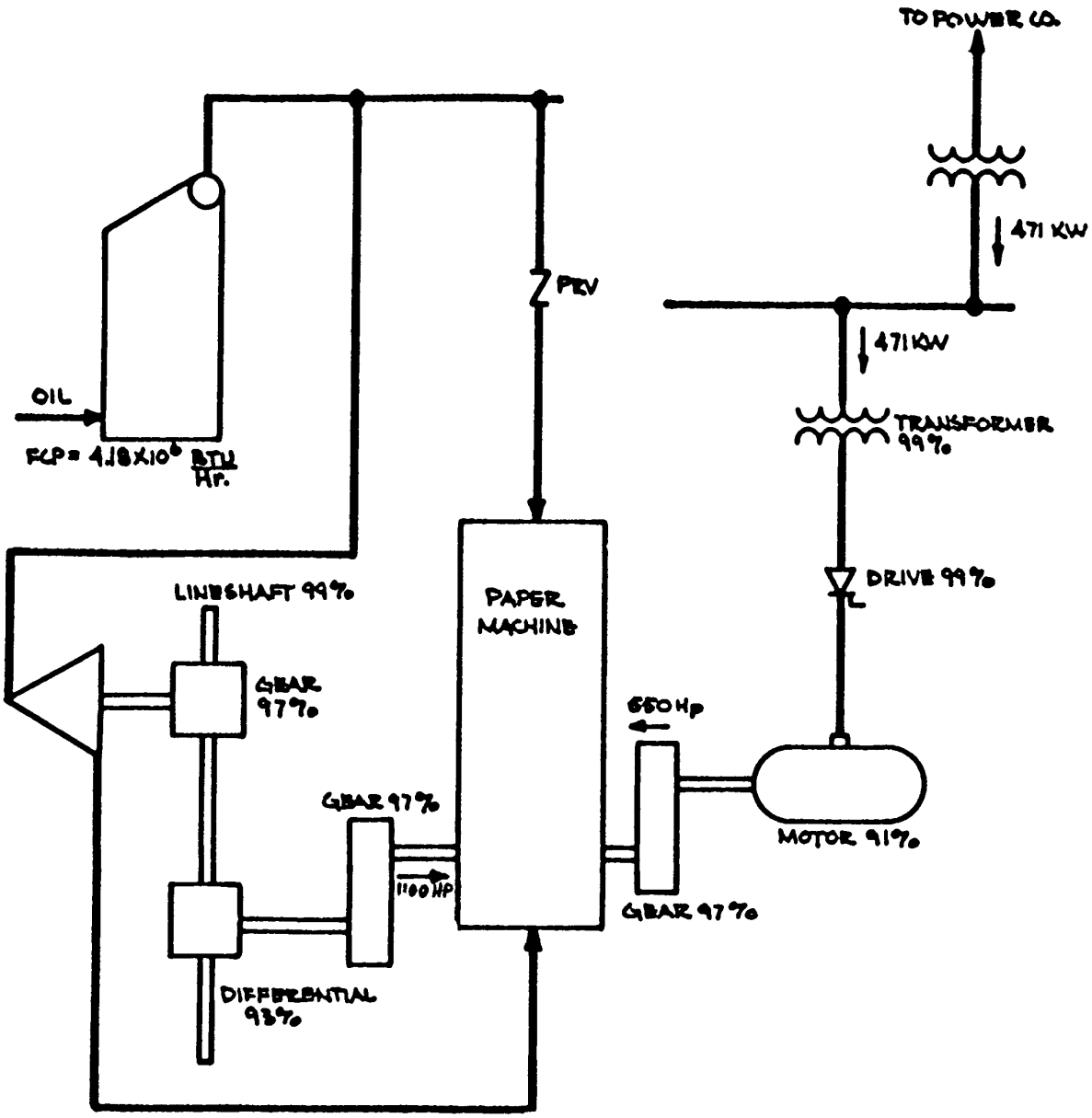

CASE 4

Fig. 12 Paper machine lineshaft with steam turbine drive without powerhouse turbine generator capacity available.

Authorized licensed use limited to: KIT Library. Downloaded on July 22,2025 at 13:29:37 UTC from IEEE Xplore. Restrictions apply.