Chaotic Jerk Circuit Usage in Communication Systems

Filips Capligins
Institute of Radioelectronics
Riga Technical University,
Riga, Latvia
filips.capligins@rtu.lv

Anna Litvinenko
Institute of Radioelectronics
Riga Technical University,
Riga, Latvia
anna.litvinenko@rtu.lv

Arturs Aboltins
Institute of Radioelectronics
Riga Technical University,
Riga, Latvia
arturs.aboltins_1@rtu.lv

Eriks Austrums
Institute of Radioelectronics
Riga Technical University,
Riga, Latvia
eriks.austrums@edu.rtu.lv

Artis Rusins
Institute of Radioelectronics
Riga Technical University,
Riga, Latvia
artis.rusins@edu.rtu.lv

***Abstract* — This paper presents a study of chaotic jerk circuit capabilities for communication system applications. The chaotic synchronization is achieved for a specific Sprott chaotic jerk circuit using controlled error feedback. A chaos shift keying (CSK) communication system that uses chaotic synchronization, and a modification of the jerk circuit, necessary for the chaotic switching, are proposed. Synchronization of the chaotic jerk circuits is examined using circuit simulation software *Multisim* and *LTSpice*, and a breadboard circuit.**

Keywords* — *chaos, chaotic synchronization, jerk circuit, chaos shift keying, chaotic communication

I. Introduction

Chaotic oscillators can produce determined, aperiodic, noise-like signals that can be quite effectively used in communication systems [1], [2]. Their main advantage for such use is security – chaotic signals are very hard to detect, intercept and decode without the use of specially matched circuits. Also, chaotic communication systems are highly sustainable to noise, jamming, interference and multipath propagation issues, similarly to many other spread spectrum communication techniques.

Chaotic jerk circuits are relatively new – they have been discovered at the beginning of 21st century [3]. Their capabilities for use in communication systems have not been yet fully discovered [4]. There are propositions of jerk circuit communication systems that use chaotic masking [5], [6] or differential chaos shift keying (DCSK) modulation [7], but none of the researches address the implementation of the jerk circuits in the chaos shift keying (CSK) communication systems with chaotic synchronization. In this paper, the possibility of such communication system is investigated via simulations and experimental study on the beadboard.

The paper consists of five sections: the first one includes the introduction, the second one is dedicated to the description of the chaotic oscillator – a specific Sprott jerk circuit; the third section describes the synchronization scheme used. Section IV describes the proposed CSK communication system; Section V provides conclusions.

II. Sprott Jerk Circuit

A *jerk* is a third-time derivative of some variable x, which would correspond to the first-time derivative of acceleration in a mechanical system. Therefore, a *jerk equation* is a third-order time differential equation. For some ranges of specific conditions, jerk equations can provide chaotic solutions. For example, a very simple jerk equation (1) can provide chaotic solutions for $\alpha < 0.27$ [8].

$$\dddot{x} + \ddot{x} + x + \alpha^2 \exp\left(\frac{\dot{x}}{\alpha}\right) = 0 \tag{1}$$

The third-order differential equation (1) can be decomposed into a system of three first-order equations (2) and slightly modified, so that exponential function describes a simplified mathematical model of a typical silicon diode.

$$\begin{cases} \dot{x} = y \\ \dot{y} = z \\ \dot{z} = -z - x - 10^{-9}\left[\exp\left(\frac{y}{0.026}\right) - 1\right] \end{cases} \tag{2}$$

The chaotic circuit (see Fig. 1) used in this research is a jerk circuit – it can be considered as an analog computer that calculates (2) using discrete electronic components and the voltage as a variable.

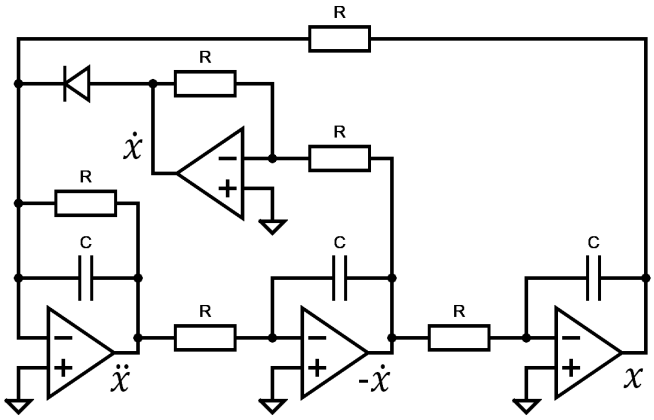

Fig. 1. Schematic of Sprott jerk circuit [8] used in current research.

Authorized licensed use limited to: KIT Library. Downloaded on July 22,2025 at 13:30:38 UTC from IEEE Xplore. Restrictions apply.

This jerk circuit [8] consists of three consequent integrators, an invertor, a diode and two feedback loops. When prototyping a chaotic communications system, an essential property for the generator is its ability to produce chaotic oscillations using a wide range of component nominal values. Unlike many chaotic generators, the component values are not critical for the given scheme [8]. All resistors and capacitors can have the same arbitrary values that are chosen as R = 10 kΩ and C = 100 nF for this study. Also, 1N4007 diode and UA741 operational amplifiers have been used. Fig. 2 illustrates a chaotic attractor of the jerk circuit simulated in *LTSpice* – a corresponding subset of chaotic trajectories for two circuit state variables (x and $\dot{x}$) in the phase plane. These trajectories almost never repeat themselves through oscillations, and therefore they are one of the simplest ways to empirically observe that a nonlinear dynamical system indeed exhibits a chaotic behavior.

The studies of the chaotic jerk circuit and the synchronization scheme, discussed below, are carried out using simulations with *Multisim* and *LTSpice* models with a maximum time step of 10^{-4} s, as well as with discrete electronic components assembled on a breadboard. The operational amplifiers are powered by a bipolar ± 15 V power supply.

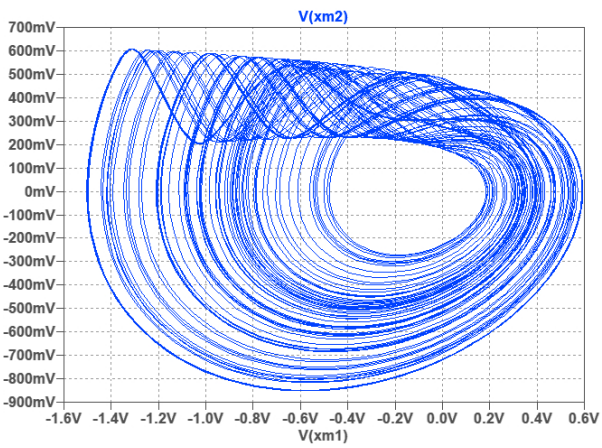

Fig. 2. Sprott jerk circuit attractor projection in the phase plane, where x axis represents the voltage of state variable x, but y axis – the voltage of $\dot{x}$ state variable, simulated in *LTSpice*.

III. Synchronization Scheme

The synchronization between two identical chaotic circuits occurs when their state variables (voltage, current) become the same even if both circuits had different initial conditions. According to [9], two jerk circuits can be synchronized using a controlled error feedback method, called practical finite-time synchronization. This method is designed specifically for jerk circuits, and it aims to attain fast convergence speed for the synchronization and to reduce the cost of the possible communication system by using a simple controller circuit, attached to the slave jerk circuit. This synchronization method uses a single output signal from the master jerk circuit to control the slave jerk circuit, which is a desirable feature in a communication system.

This chaotic synchronization technique uses a controller at the slave circuit that operates with the difference between the chaotic outputs from the master circuit and the slave oscillator (see Fig. 3). Both outputs are the sum of all three state variables (x, $\dot{x}$ and $\ddot{x}$) of each chaotic jerk circuit, while their difference, observed at the first stage of controller circuit, represents the synchronization error. This error is further applied in a negative feedback to each state variable of the slave circuit, reducing the synchronization error.

In order to apply practical finite-time synchronization for the specific jerk circuit (see Fig. 1), controller parameters are calculated according to the equation system, described in [9]. For the chosen jerk circuit component values, controller parameters determine controller resistor values as: R_{C1} = 48.2843 kΩ, R_{C2} = 5.8579 kΩ and R_{C3} = 14.1421 kΩ. Also, calculated parameters determine that the sign of synchronization error voltage through resistors R_{C1} and R_{C3} must be inverted.

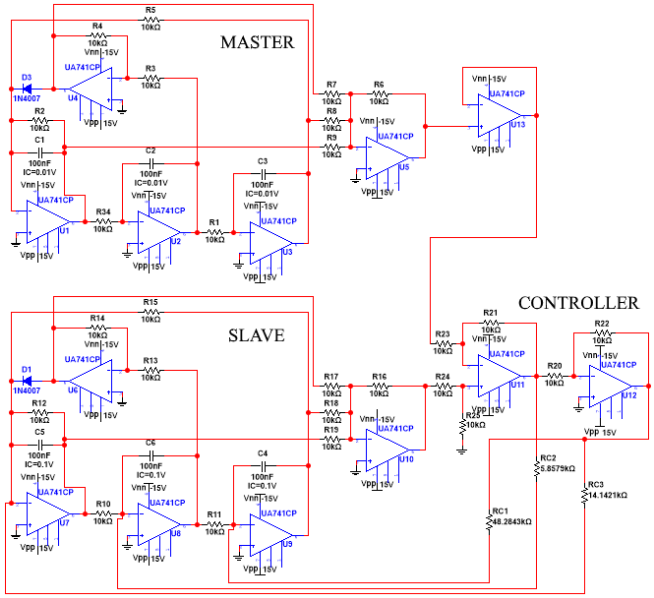

Fig. 3. Schematic of synchronized jerk circuits in *Multisim* that uses method, proposed in [9].

Practical implementation of this synchronization requires that parameters match in both circuits, which would make possible to achieve very low synchronization error voltage values. The breadboard circuit used in this research did not operate as accurate as simulated circuits. Probable reasons for that are low tolerances of electronic components used. Anyhow, the breadboard circuit was able to achieve partial synchronization using schematic as in Fig. 3, but synchronization results in simulations with *Multisim* and *LTSpice* software were considerably better – the specific synchronization error values are compared in the next section.

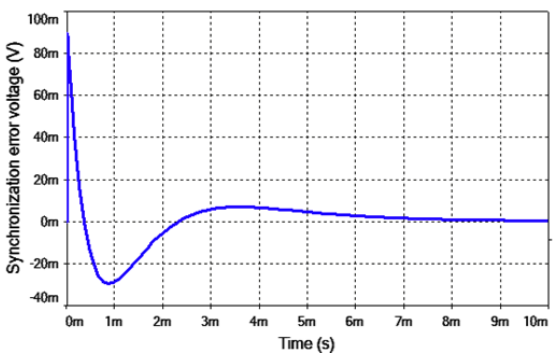

Fig. 4. Synchronization error reducing due to the synchronization effect between master and slave jerk circuits, obtained in *Multisim*.

Authorized licensed use limited to: KIT Library. Downloaded on July 22,2025 at 13:30:38 UTC from IEEE Xplore. Restrictions apply.

The time needed for circuits to minimize synchronization error to some minimal achievable level is about the same for simulations and breadboard circuit, and is approximately equal to 10 ms, as it can be seen for the *Multisim* model in the Fig. 4. The synchronization time is related to the dominant frequency of the jerk circuit, which is close to 100 Hz. This frequency can be altered by using different *R* and *C* values. Also, the correlation graph on the Fig. 5 illustrates the sustainability of the chaotic synchronization in *Multisim*, as an example.

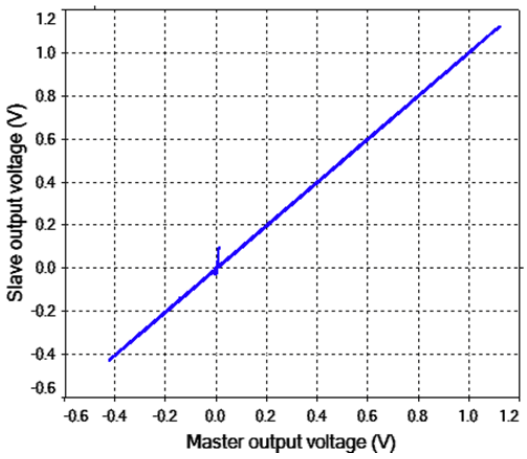

Fig. 5. Correlation graph for synchronized jerk circuits, obtained in *Multisim*.

IV. CSK Communication System

A communication system based on the chaotic jerk circuits can be set up, using the CSK method. Chaos shift keying is a basic modulation technique for digital data transmission using chaotic oscillators. The transmitter usually has two chaotic oscillators (master circuits) that are switched in transmission. The receiver also has two chaotic oscillators (slave circuits), that can be synchronized only with the appropriate master chaotic oscillator signal from the transmitter. Depending on which master chaotic oscillator is transmitting, one of the slave oscillators at the receiver gets synchronized whereas another one – does not. Synchronization error from both slave oscillators can be compared to determine which master oscillator did the transmission. By switching (electronically) between master chaotic oscillators in the transmitter, a binary data can be coded – one of the oscillators transmits a chaotic signal representing bit "1", but another one – representing bit "0". Therefore, the receiver can retrieve sent data bits from the received chaotic symbols by estimating the difference of its oscillator's synchronization error difference. One way of detection in CSK compares rms of error signals, calculated over a period equal to the bit duration, but another common detection method calculates the correlations between each slave oscillator output and input signals, which are compared over the same period.

The main drawback of CSK modulation is speed – data transmission speed is limited to the time necessary for a synchronization to occur after the switching. Nevertheless, the main advantage is high resistance to channel noise – synchronization in CSK systems can usually be observed even when the signal level is far below the noise level.

In this paper, a possibility to use chaotic jerk circuit in CSK communication system is investigated. For this task, a modified version of the jerk circuit shown in Fig. 1 is proposed (see Fig. 6) that only alters the direction of the diode. In the modified jerk mathematical equation, only two signs of (2) must be modified to represent the general behavior of the modified jerk circuit, as shown in (3).

$$\begin{cases} \dot{x} = y \\ \dot{y} = z \\ \dot{z} = -z - x + 10^{-9}\left[\exp\left(\frac{-y}{0.026}\right) - 1\right] \end{cases} \tag{3}$$

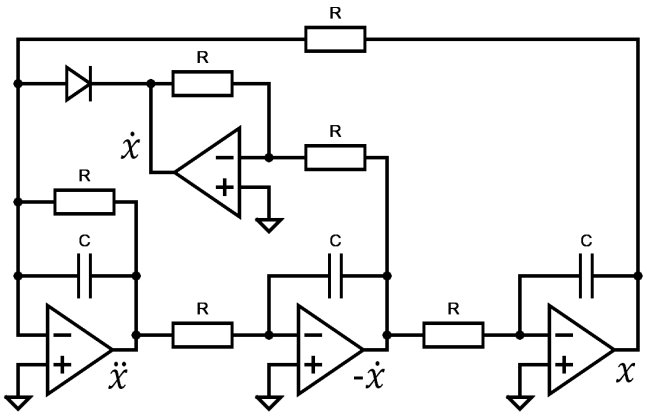

Fig. 6. Schematic of the modified chaotic jerk circuit with inverse diode connection.

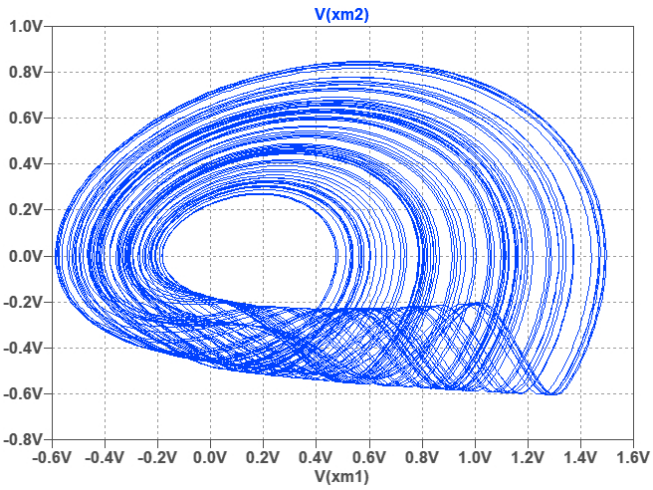

Fig. 7. Modified jerk circuit attractor projection in the phase plane, where x axis represents the voltage of state variable x, but y axis – the voltage of $\dot{x}$ state variable, simulated in *LTSpice*.

Simulations and experimental measurements have verified that the modified jerk circuit exhibits similar chaotic behavior as the original one. The attractor of the modified jerk circuit (see Fig. 7) has dynamics like the original circuit, but for the opposite voltage values. Moreover, the synchronization between modified master and slave jerk circuits can be achieved using the same error feedback controller, with the same parameters, achieving very similar synchronization error. But if two different types of slave and master jerk circuits are connected, the synchronization does not occur, and the observed synchronization error rms voltage is relatively

Authorized licensed use limited to: KIT Library. Downloaded on July 22,2025 at 13:30:38 UTC from IEEE Xplore. Restrictions apply.

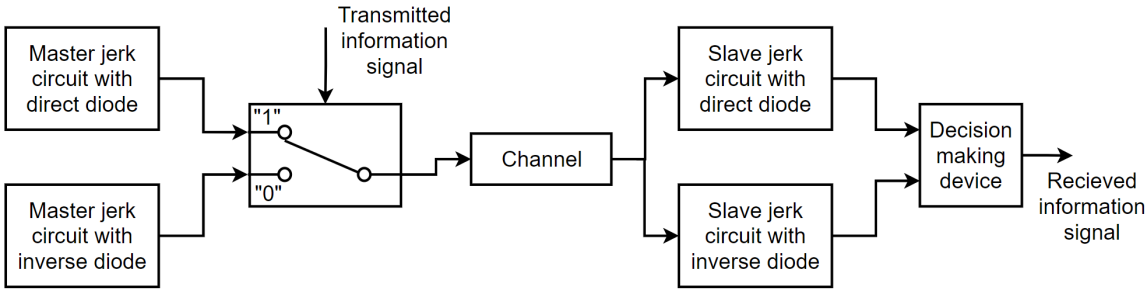

Fig. 8. Proposed CSK communication system (baseband equivalent scheme) based on the chaotic synchronization of the jerk circuits with direct and inverse diode connection.

high. The average values of the synchronization error rms voltage, when two different or two equal jerk circuits are connected, has been calculated using simulations in *LTSpice* and *Multisim*, and measured using physical circuits on a breadboard (see Table I).

Both *Multisim* and *LTSpice* simulations predict an excellent capability to distinguish whether the same or different jerk circuits are trying to synchronize. Breadboard designed jerk circuits have shown higher levels of synchronization error signals for both direct and inverse diode connections in the master and slave systems, although the difference between errors has a ratio of about 13, which still makes it possible to correctly estimate the transmitted bit.

TABLE I. SYNCHRONIZATION ERRORS AT DIFFERENT CIRCUIT CONNECTION COMBINATIONS

	Same circuits average sync. error rms, mV	***Different circuits average sync. error rms, mV***	***Ratio***
Multisim	4,06	2930,0	721,67
LTSpice	0,53	456,5	866,22
Breadboard	55,50	720,5	12,98

This property can be used for the CSK communication system, as shown in Fig. 8. In order to switch between different types of master jerk circuits, the transmitter can use a single master chaotic jerk oscillator with switchable diodes attached for both directions, where only one of them is connected at the same time – the connection is determined by an electronic switch that alters its state depending on which bit is being transmitted. The receiver is equipped with both types of controlled slave jerk circuits that receive the transmitted chaotic signal. Estimation of the difference between the synchronization error rms voltage values of both slave jerk circuits should be used to detect and retrieve the transmitted data bit.

V. CONCLUSION

A new application of chaotic jerk circuit for the communication system has been presented. The controlled error feedback synchronization method was successfully used for the chaotic synchronization of two jerk circuits. To implement the CSK modulation, a modification of the Sprott jerk circuit has been used, that has an inverse diode connection.

Simulations and experimental measurements show a distinct difference between the synchronization error for two equal and for two different types of jerk circuits coupled – this feature can be used in the proposed CSK communication scheme. The diode connection in the master circuit schematic can be altered to achieve a simple switching algorithm for the CSK application.

However, some additional experimental studies are necessary for the validation of the proposed communication system concept. One of the first steps of further studies will be the evaluation of the synchronization sustainability to the channel noise and slave input voltage drop for all four possible connections between master and slave chaotic jerk circuits with direct and inverse diodes.

ACKNOWLEDGMENT

This work has been supported by the Riga Technical University 2019/2020 project for strengthening scientific personnel capacity Nr. MP-2019/5, “Advanced security wireless sensor network communication system with chaotic synchronization.”

REFERENCES

[1] J. Jankovskis, D. Stepins, S. Tjukovs, and D. Pikulins, “Examination of different spread spectrum techniques for EMI suppression in dc/dc converters,” *Elektron. ir Elektrotechnika*, vol. 6, no. 6, pp. 60–64, 2008.

[2] D. Pikulins, “Exploring types of instabilities in switching power converters: The complete bifurcation analysis,” *Elektron. ir Elektrotechnika*, vol. 20, no. 5, pp. 76–79, 2014.

[3] J. C. Sprott and S. J. Linz, “Algebraically Simple Chaotic Flows,” *Int. J. Chaos Theory Appl.*, vol. 5, no. 2, p. 285, 2000.

[4] J. Mendoza, L. Araque-Lameda, and E. Colina-Morles, “Understanding chaos through a Jerk circuit,” *2016 Technol. Appl. to Electron. Teach. (TAEE), Sev.*, pp. 1–5, 2016.

[5] A. Sambas, W. S. Mada Sanjaya, M. Mamat, and Halimatussadiyah, “Design and analysis bidirectional chaotic synchronization of Rossler circuit and its application for secure communication,” *Appl. Math. Sci.*, vol. 7, no. 1–4, pp. 11–21, 2013.

[6] A. Sambas, M. S. Ws, M. Mamat, N. V Karadimas, and O. Tacha, “Numerical Simulations in Jerk Circuit and It ’ s Application in a Secure Communication System,” *Recent Adv. Telecommun. Circuit Des. WSEAS 17th Int. Conf. Commun. Rhodes Island, Greece July 16-19, 2013*, pp. 190–196, 2013.

[7] J. Liu, J. C. Sprott, S. Wang, and Y. Ma, “Simplest chaotic system with a hyperbolic sine and its applications in DCSK scheme,” *IET Commun.*, vol. 12, no. 7, pp. 809–815, 2018.

[8] J. C. Sprott, “A new chaotic jerk circuit,” *IEEE Trans. Circuits Syst. II Express Briefs*, vol. 58, no. 4, pp. 240–243, 2011.

[9] P. Louodop, M. Kountchou, H. Fotsin, and S. Bowong, “Practical finite-time synchronization of jerk systems: Theory and experiment,” *Nonlinear Dyn.*, vol. 78, no. 1, pp. 597–607, 2014.

Authorized licensed use limited to: KIT Library. Downloaded on July 22,2025 at 13:30:38 UTC from IEEE Xplore. Restrictions apply.