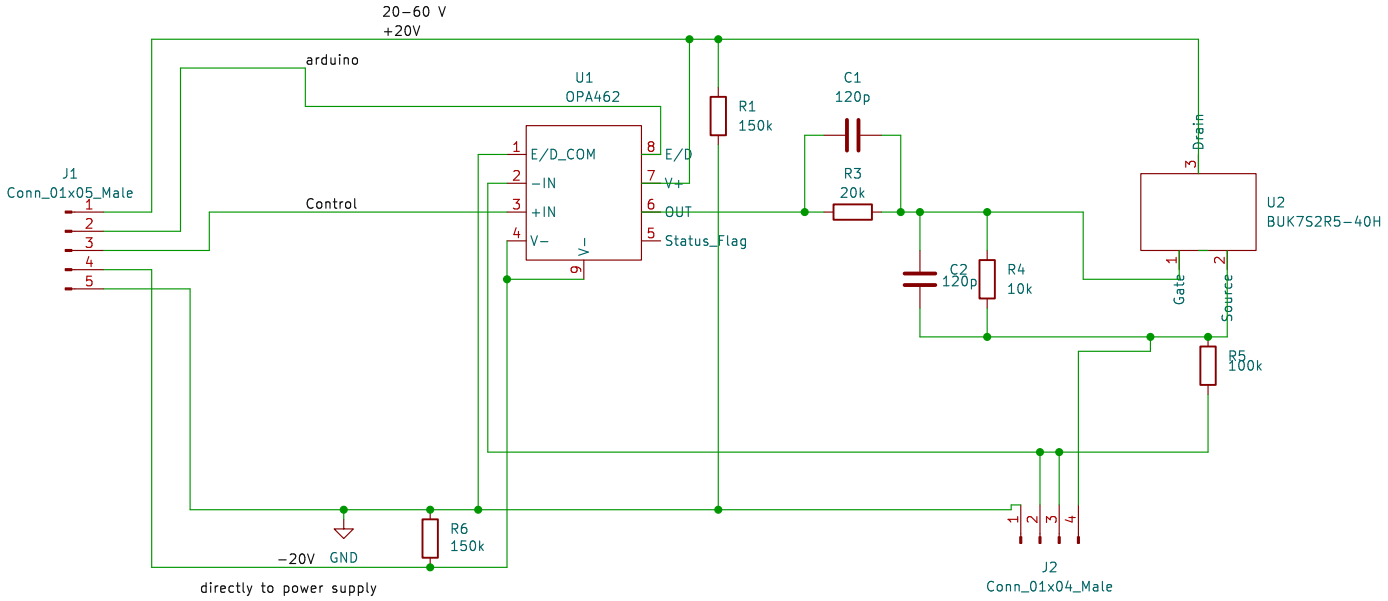

Author: Shilin Ray
SBC / Northwestern University
Sheet: /
File: LED Driver.kicad_sch

Title: LED driver

Size: A5	Date: 2023-02-01	**Rev: v1a**
KiCad E.D.A. kicad 7.0.2		Id: 1/1