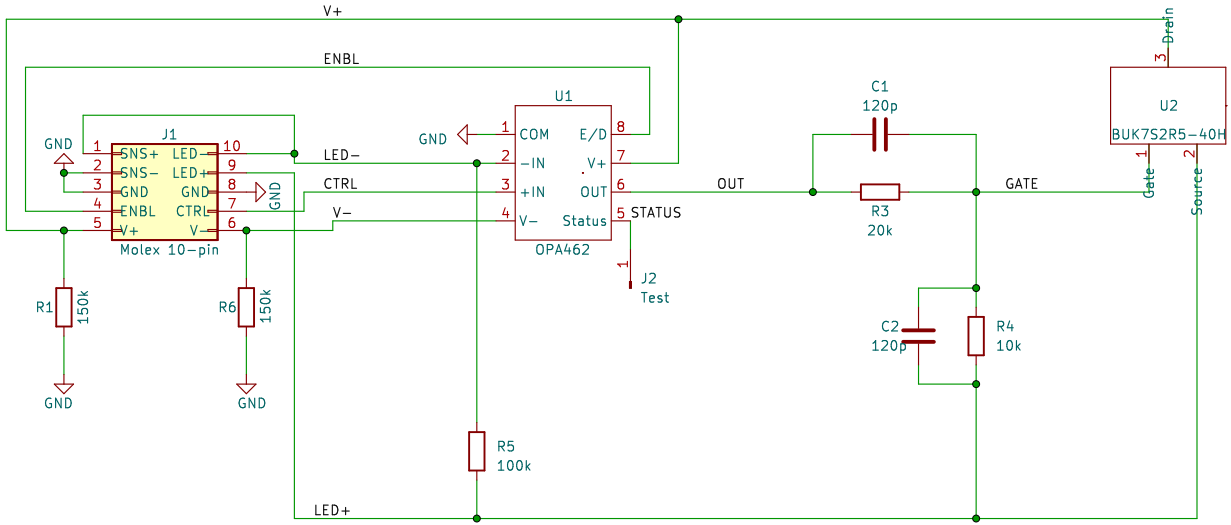

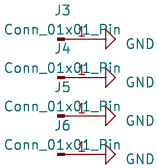

Author: Shilin Ray
Modified by: Zhiheng Sheng

SBC / Northwestern University

Sheet: /
File: LED Driver.kicad_sch

Title: LED driver

Size: A5	Date: 2023−02−01	**Rev: v2a**
KiCad E.D.A. kicad 7.0.2		Id: 1/1