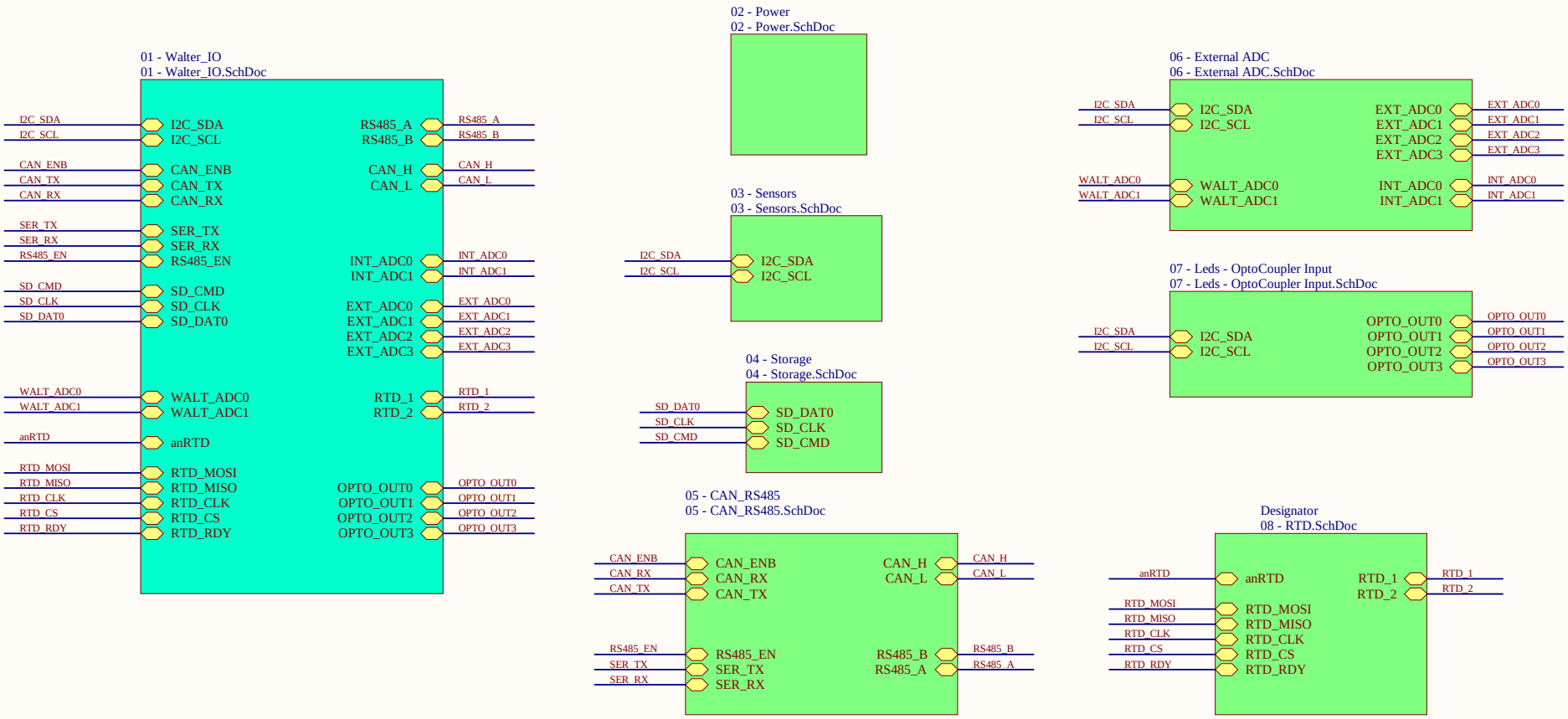

Title *			
Size: A4	Number: *	Revision: *	
Date: 1/25/2025	Time: 12:39:45 PM	Sheet * of 9	
File: 00 - Main.SchDoc			

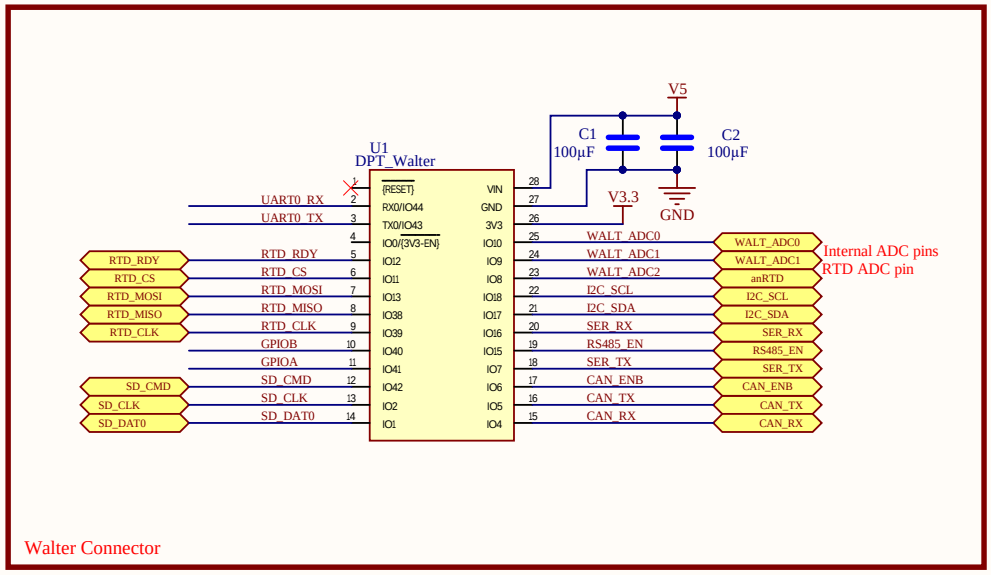

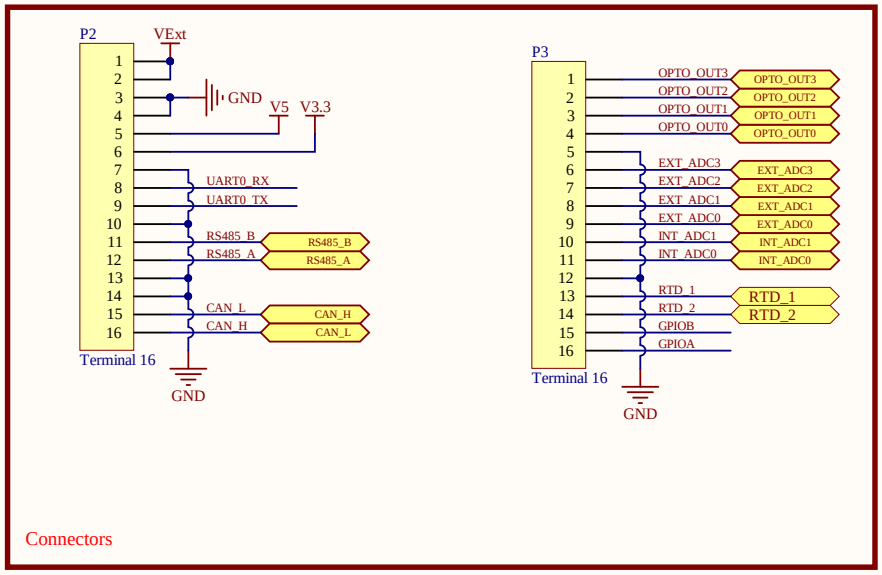

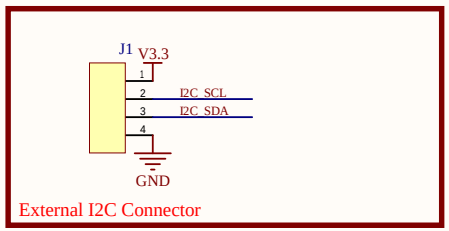

Title *			
Size: A4	Number: *	Revision: *	
Date: 1/25/2025	Time: 12:39:45 PM	Sheet * of *	
File: 01 - Walter_IO.SchDoc			

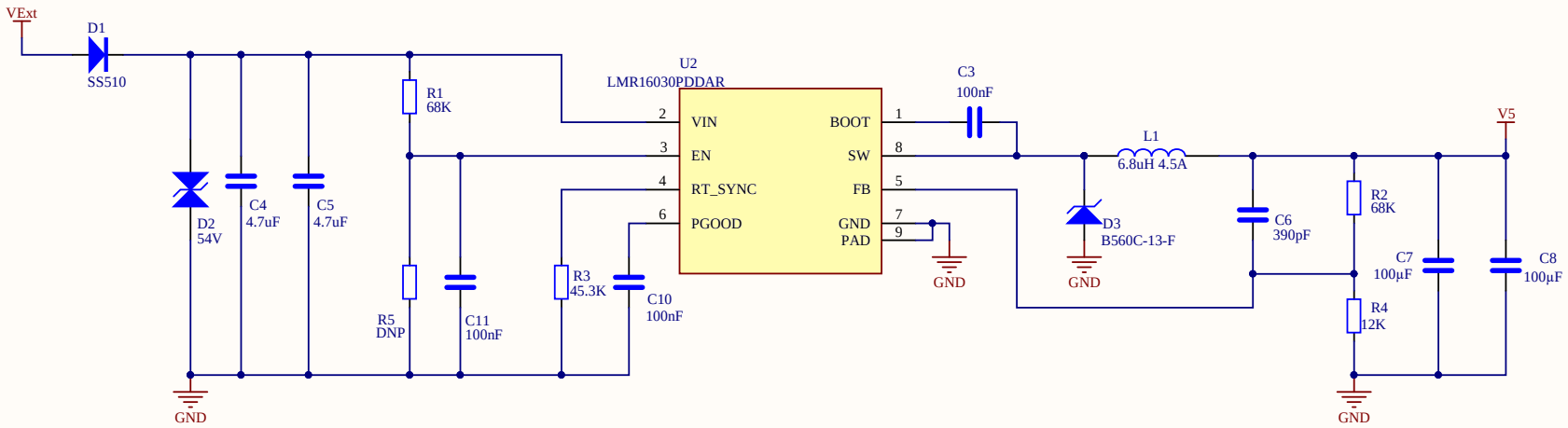

Title *			
Size: A4	Number: *	Revision: *	
Date: 1/25/2025	Time: 12:39:45 PM	Sheet * of *	
File: 02 - Power.SchDoc			

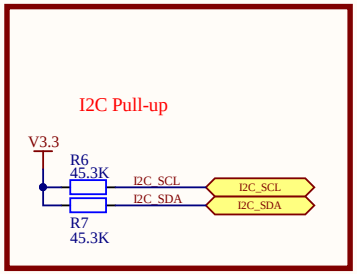

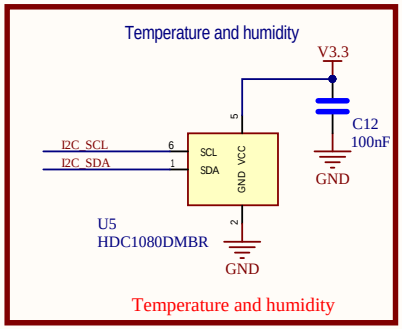

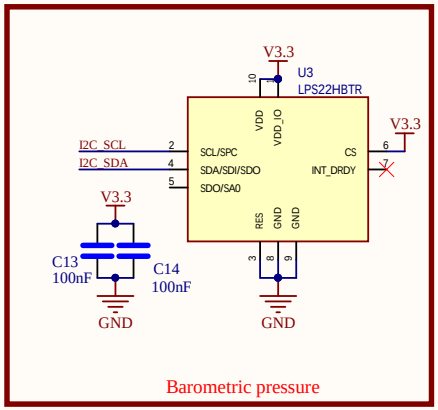

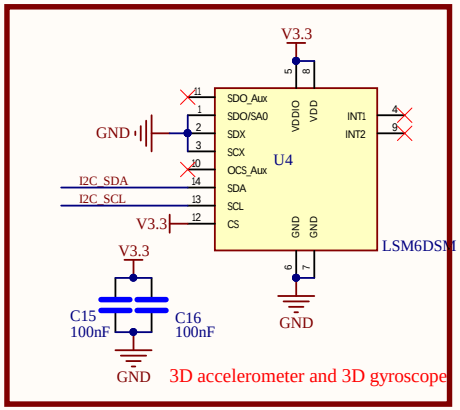

Title *			*
Size: A4	Number: *	Revision: *	*
Date: 1/25/2025	Time: 12:39:45 PM	Sheet * of *	*
File: 03 - Sensors.SchDoc			

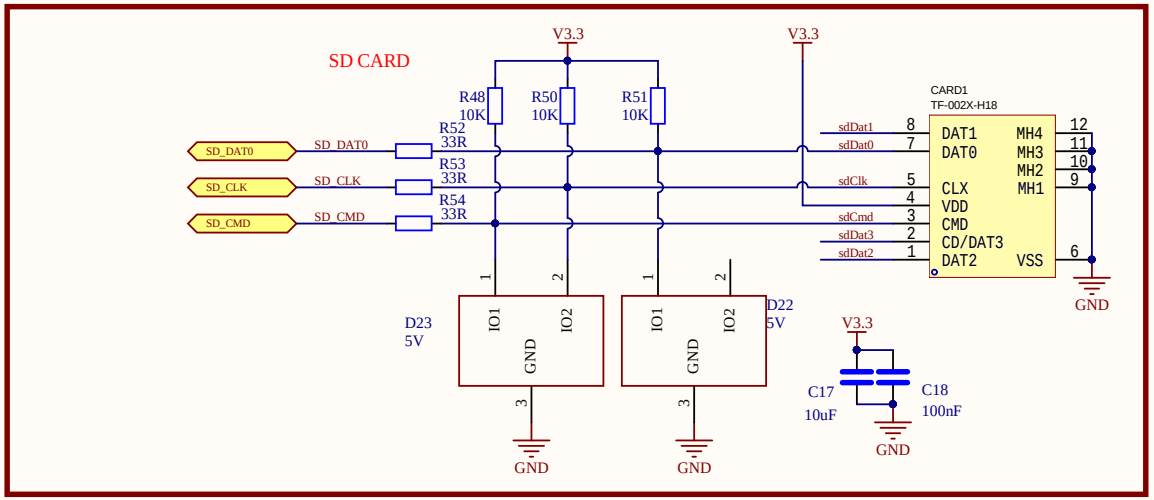

Title *			
Size: A4	Number: *	Revision: *	
Date: 1/25/2025	Time: 12:39:45 PM	Sheet * of *	
File: 04 - Storage.SchDoc			

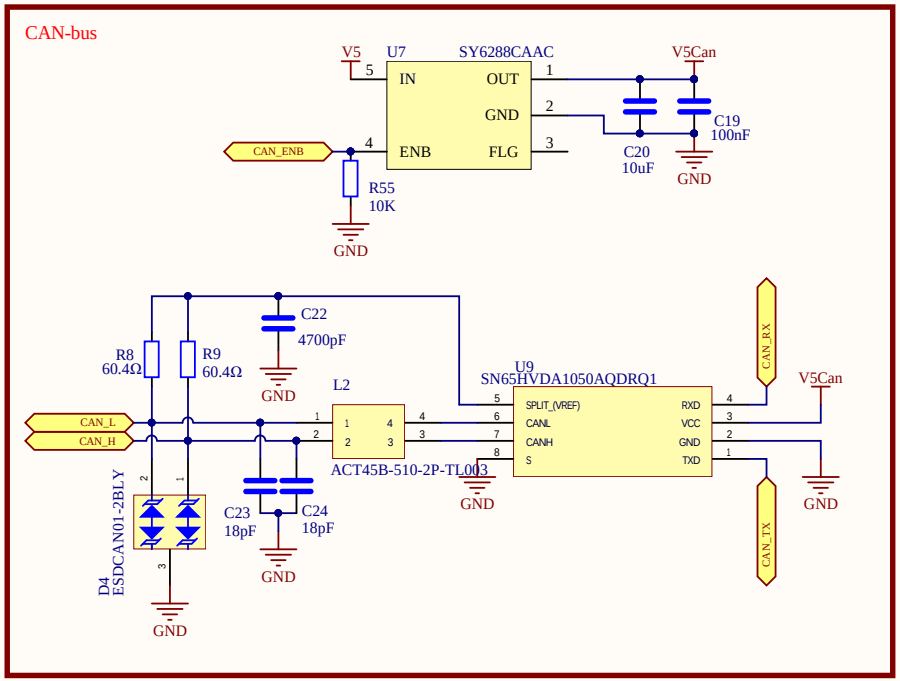

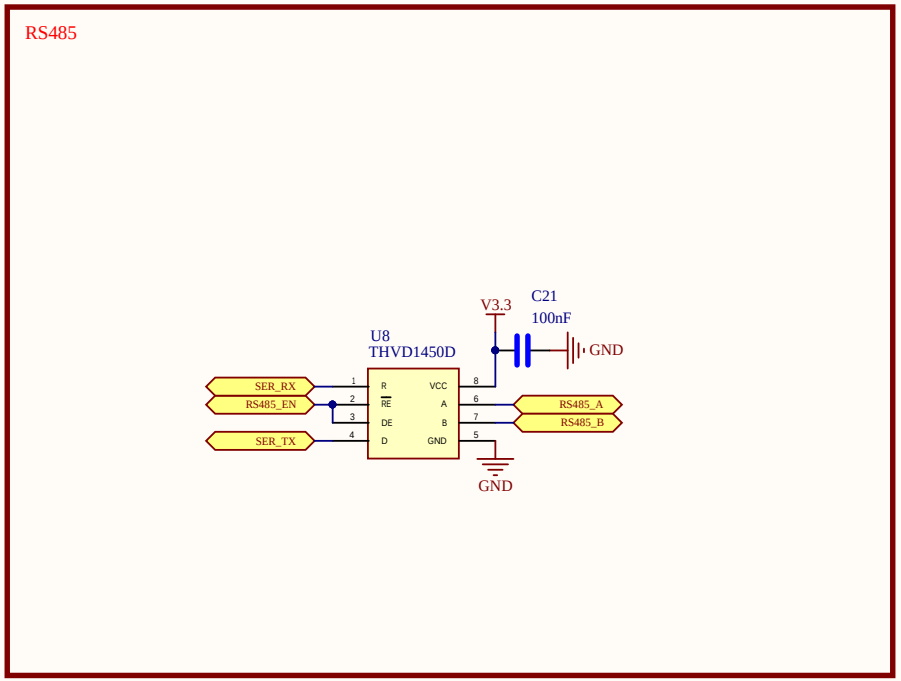

Title *			
Size: A4	Number: *	Revision: *	
Date: 1/25/2025	Time: 12:39:45 PM	Sheet * of *	
File: 05 - CAN_RS485.SchDoc			

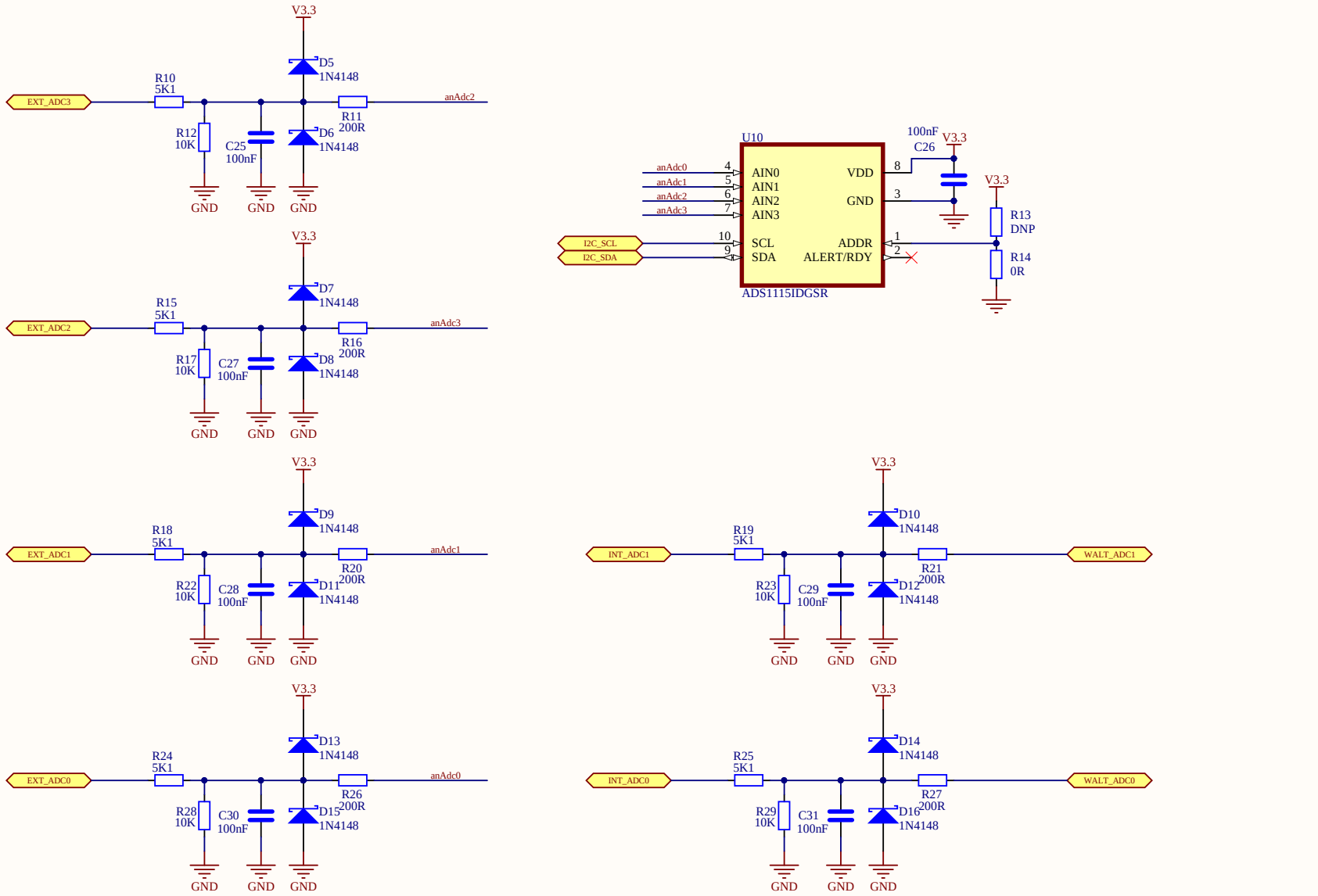

Title *			*
Size: A4	Number: *	Revision: *	*
Date: 1/25/2025	Time: 12:39:45 PM	Sheet * of *	*
File: 06 - External ADC.SchDoc			

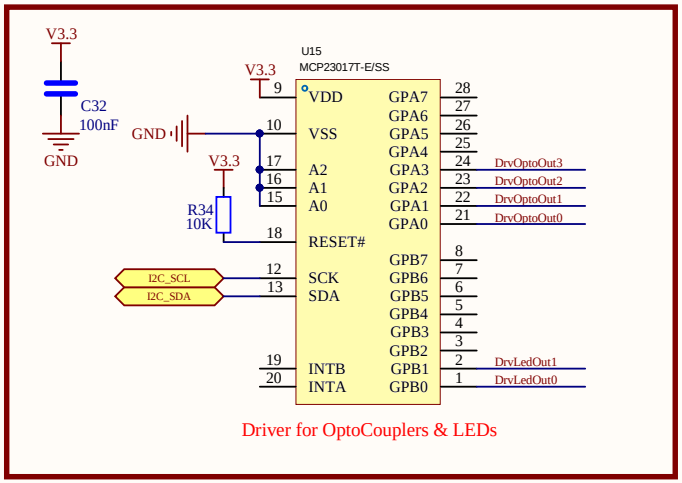

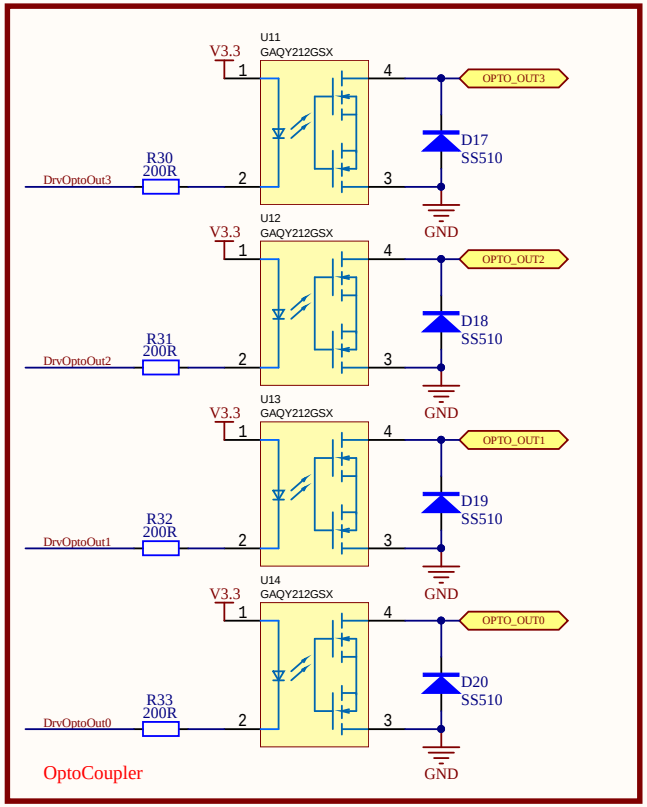

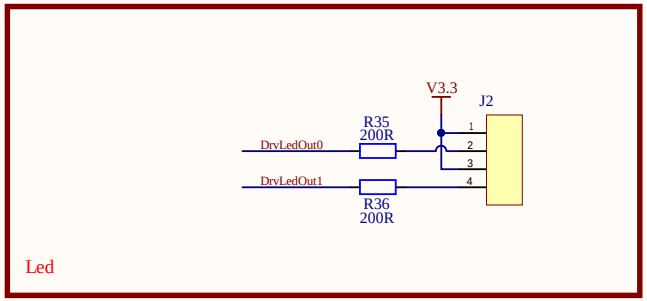

Title *			
Size: A4	Number: *	Revision: *	
Date: 1/25/2025	Time: 12:39:45 PM	Sheet * of *	
File: 07 - Leds - OptoCoupler Input.SchDoc			

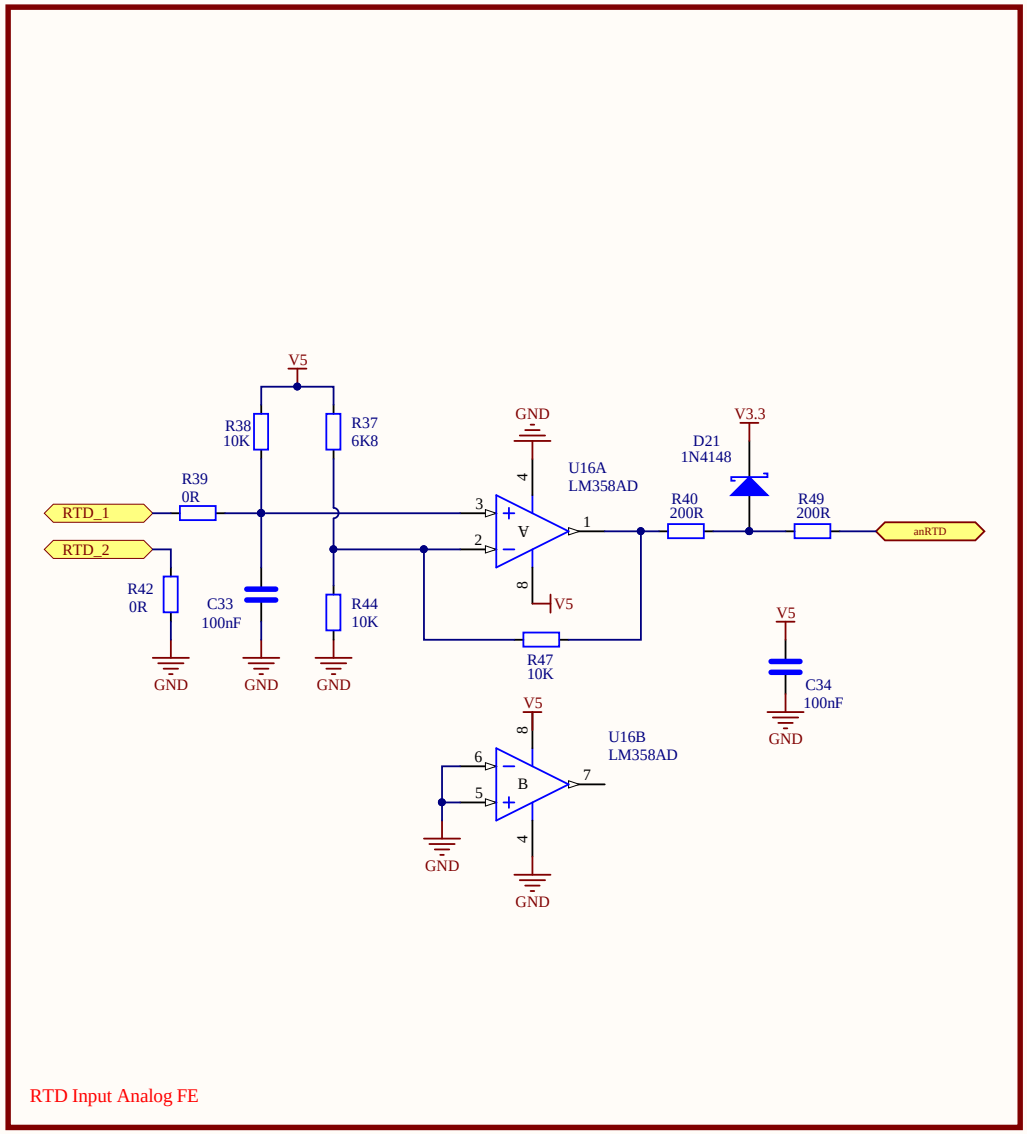

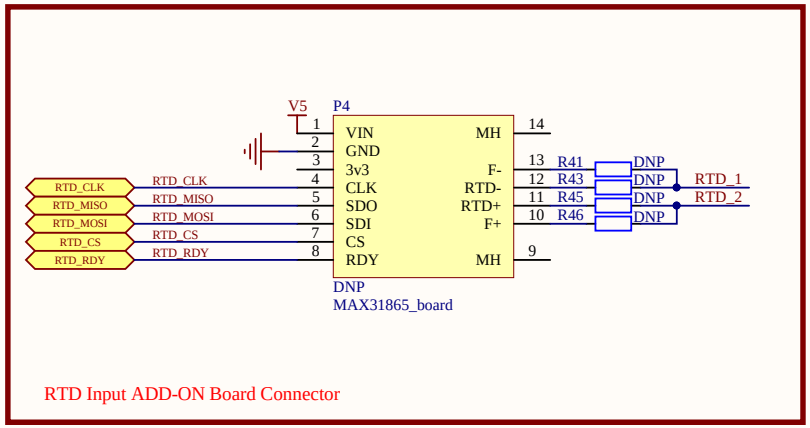

Title *			
Size: A4	Number: *	Revision: *	
Date: 1/25/2025	Time: 12:39:46 PM	Sheet * of *	
File: 08 - RTD.SchDoc			

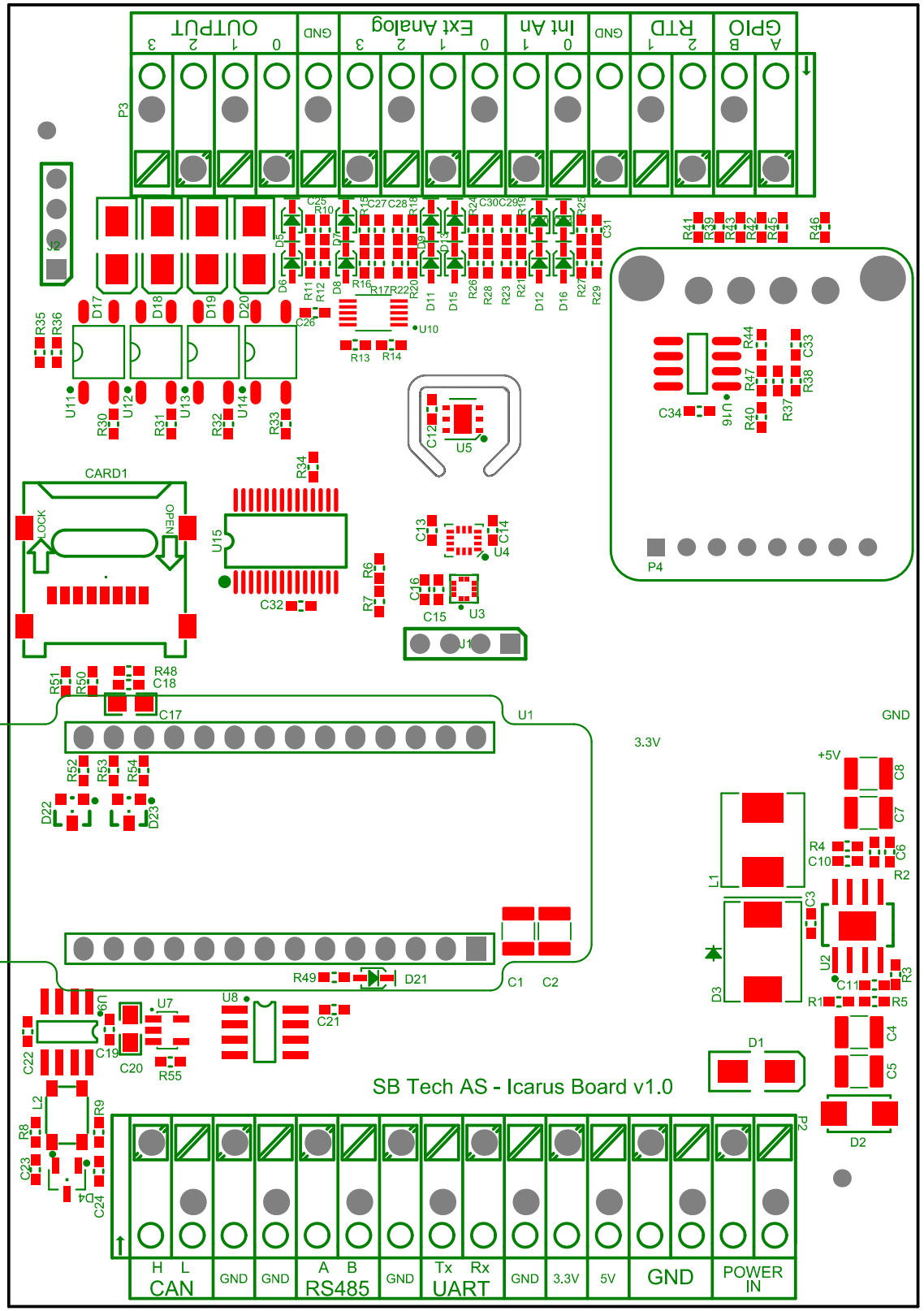

OUTPUT
GND
Ext Analog
Int An
GND
RTD
GPIO
P3
J2
CARD1
LOCK
OPEN
U15
U5
U4
U3
U1
P4
U10
U16
U7
U8
U9
U2
D1
D2
D3
D4
L1
L2
P2
3.3V
GND
+5V
SB Tech AS - Icarus Board v1.0
H L
CAN
GND
GND
A B
RS485
GND
Tx Rx
UART
GND
3.3V
5V
GND
POWER IN

Connector	Value	Description	Designator	Quantity	JLCPCB	Footprint
100uF	100uF	63V 330uF 6MR x30% 1210 Multilayer Ceramic Capacitors MLCC - SMD/SMT ROHS	C1, C2, C7, C8	4	C49998	C_1210_32 25Metric
100nF	100nF	25 V 100 nF X7R ±10% 0603 Multilayer Ceramic Capacitors MLCC - SMD/SMT ROHS	C9, C10, C11, C12, C13, C14, C15, C16, C17, C18, C19, C20, C21, C22, C23, C24, C25, C26, C27, C28, C29, C30, C31, C32, C33, C34	26	C14663	C_0603_1 608Metric
4.7uF	4.7uF 100V	100 V 4.7 µF X7R ±10% 1210	C5, C6	2	C85386	C_1210_32 25Metric
10kpF	10kpF	50V 10kpF X7R ±10% 0603 Multilayer Ceramic Capacitors MLCC - SMD/SMT ROHS	C31	1	C1617	C_0603_1 608Metric
22kpF	22kpF		C17, C25	2	C1523	C_0603_1 608Metric
470kpF	470kpF		C27	1	C1623470	C_0603_1 608Metric
1kpF	1kpF	50V 1kpF X7R ±10% 0603 Multilayer Ceramic Capacitors MLCC - SMD/SMT ROHS	C29, C33	2	C1588	C_0603_1 608Metric
TF-SD2.0-SMB	TF-SD2.0-SMB	Card Slot Connector Load: TF card(Push type) SMD SD Card / Memory Card Connector ROHS	SD4011	1	C112	TF_SD2.0-S MB_P1.85
DIODE-SCHOTTKY-40V-1A-DO214AC	SS310		D1, D17, D18, D19, D20	5	C29832	DIOM 5126X2 40X245
SMBJ54CA-M3	SMJ	600W Transient Surge Protection TVS/DIOD ROHS	D2	1	C138213	SMB(DO-2 14AA)
SMBC 13	SMBC 13	3 Watts 13 Volts 5 % Bi-Directional Zener Diodes ROHS	D3	1	C149120	SMC (DO-2 15AB)
P6SCA30S-MLY	SOD-323-MLY	600W 30V 1 Channel Surge Protection TVS/DIOD ROHS	D4	1	C1479834	SOTM3F33 X100-2N
1N4148-SOD-123	1N4148	1N4148	D5, D6, D7, D8, D9, D10, D11, D12, D13, D14, D15	11	C2128353	SOD323_ST M_NW
1N5819-SOD-123-PHOENIX-CONTACT	SOD-123		D16, D18	2	C191023839	TO-252-2 SC-63
Conn_01x02_Male	Conn_01x02_Male	SIP 2.54mm Pitch Single Row Right Angle Header, Vertical ROHS	J1, J2	2	C2144845	PinHeader _1x02_P2 54mm_Verti cal
5.6uH 4.5A	5.6uH 4.5A	5.6uH 4.5A 30% 5x5x2.4mm SMD/Unshielded Wire Power Inductors ROHS	L1	1	C2158575	INDUCTOR SWPA5040
NC7SB3157-P-TL003	NC7SB3157-P-TL003	3-CHANNEL SPST ANALOG SWITCH, 0.7 OHM, 2.5 V TO 5.5 V, SC70-6 ROHS	U2	1	C179564	NC7SB3157 P-TL003
Terminal Block	Terminal Block	5.08mm Pitch 2-Position Screw Terminal Block ROHS	J3, P3	2	C2128354	CONN-TH_2P 5.08MM
100nF	100nF	25V 100nF X7R ±10% 0603 Multilayer Ceramic Capacitors MLCC - SMD/SMT ROHS	C4	1	C1148659	C_0603_1 608Metric
10k	10k		R1	1	C1148609	R_0603_1 608Metric
100nF	100nF		R5, R15, R51, R45, R48	5		R_0603_1 608Metric
68.4R	68.4R, 0805	125mW Thick Film Resistors - Automotive, AEC-Q200 Qualified ROHS	R6, R9, R37	3	C123690	R_0603_1 608Metric
1K1, 1%	1K1		R52, R36, R38, R39, R35	5	C17539	R_0603_1 608Metric
100R *NA	100R		R11, R16, R30, R31, R36, R37, R40, R41, R42, R43, R46, R38, R40, R49	14	C17977172	R_0603_1 608Metric
10R, 1%	10R		R12, R27, R32, R33, R39, R38, R42, R47, R48, R50, R51, R55	14	C17945	R_0603_1 608Metric
0R	0R		R13, R35, R58	3	C113420	R_0603_1 608Metric
10R	10R	125mW Thick Film Resistors - TSV - AEC-Q200 Qualified ROHS	R52, R53, R54	3	C17414	R_0603_1 608Metric
100P	100P, 2KV		C3	1		C_0805_2 012Metric
AMR40305-YG1HR	AMR40305-YG1HR	300p~500pF 2KV 10%Tolerance 3000mV~5000mV 3A X7R~X5V SMD/SMT DC-DC Converters ROHS	L3	1	C376906	AMR40305 YG1HR
PS25H4	PS25H4FR	25Mpps~50Mbps Ultra-low Propagation Delay Precision Isolators ROHS	U4	1	C2827823	IN-SOIC8_3 9X4.9MM_P1 27MM_L
LSM6DS3TR	LSM6DS3		U8	1	C179539	QFN-16_3X3mm_P0.5mm_EP1.64x1.64mm
AMS1085CM-3.3/NOPB	AMS1085		U9	1	C102237	TO-263-3_ TabPin2-3N-Tab
PCA9306DCUR	PCA9306CA	2.5V~5.5V 300mA Active Low 1.8V, 2.5V, 3.3V Load Switch ICs 2.5 V to 5 V Power Distribution Switches ROHS	U7	1	C2111055	SOTBF2X0 8P65X210
PCA9515ADR	PCA9515ADR		U6	1	C124612	SOIC127P6	
2.49kΩ±0.1%	2.49kΩ±0.1%		R59	1	C149764	R0402
2.49kΩ±0.1%	2.49kΩ±0.1%		R60	1	C149764	R0402
XC6111D309MR-G	XC6111D309	3.09V 1.8uA 1 Cell Voltage Detector ROHS	U10	1	C127695	SOP65P49 0X120-2DN
XC6210B332MR-G	XC6210B332	3.32V 600mA 1.8uA 1 Cell Low Dropout Voltage Regulator ROHS	U11, U12	2	C1567	SOP-8_L4.9 -W3.9-P1.27
MCP23017-E/SS	MCP23017-E/SS	16-Bit I/O Expander with Serial Interface	U13	1	C1588864	SSOP-28_L10.2-W5.3-P0.65
1N5819G	1N5819G	Low Power Schottky Quad Monolithic Amplifier	D21	1	C1623	SOD-M_