ELE 296 – Basic Electric Circuits and Electronics

- Dr. Barış Yüksekkaya
  barisy {at} ee.hacettepe.edu.tr
  http://www.ee.hacettepe.edu.tr/~barisy/ele296.html
- Textbook ve Assistive Materials
- Course Content
- Rules
- Introduction to Electric Circuits

Textbook and Materials

- Course Slides
- Electric Circuits
  Nilsson and Riedel – 10th Edition
- Electronic Devices & Circuit Theory
  Boylestad and Nashelsky – 11th Edition

Course Content

1. Circuit Components and Variables, Ohm's Law and Kirchoff's Laws
2. Circuit Analysis Techniques I - Node Voltage & Mesh Current Methods
3. Circuit Analysis Techniques II - Thevenin and Norton Equivalent Circuits
4. First Order RL and RC Circuits
5. Phasor Concept and AC Analysis of Circuits
6. Midterm (05.04.2019)
7. Introduction to Semiconductors
8. Diode Applications
9. BJT Analysis
10. FET Analysis
11. Operational Amplifier
12. Midterm (17.05.2019)
13. Logic Gates
14. Make-up Exams

Rules

- 1st Midterm 20% – 2nd Midterm 20% – Final 60%
- Make up for midterms are only possible if you have valid sick reports. Please don't ask to have a make up if you don't have one.
- There will not be a make up for the final exam.
- You can not leave the exam room for the first 30 mins.
- You may not join an exam if you are late more than 30 mins.

Introduction to Electric Circuits

- What is an electric circuit?

  An electric circuit is a mathematical model that approximates the behavior of an actual electrical system.

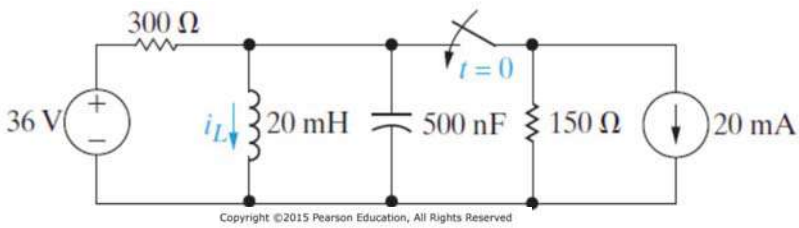

Circuit Variables

- Voltage
  - Definition – The energy per unit charge created by the separation of positive and negative charges.
  - Defn. Eq.:

$$\boxed{v = \frac{dw}{dq}}$$

v Voltage [Volt – V]
w Energy [Joule – J]
q Charge [Coulomb – C]

Circuit Variables

- Current
  - Definition – The rate of charge flow.
  - Defn. Eq.: $$\boxed{i = \frac{dq}{dt}}$$

    i Current [Ampere – A]
    q Charge [Coulomb – C]
    t Time [second – s]

Circuit Variables

- Current (cont.)
  - Current that will not change with time is Direct Current (DC).
  - Current that changes with time is Alternative Current (AC)
  - A positive current is equivalent to a negative current that is passing in the opposite direction.

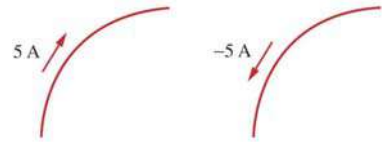

Copyright ©2015 Pearson Education, All Rights Reserved

Circuit Variables

- Ideal Basic Circuit Element
  - It does not exist as a realizable physical component. It is described mathematically in terms of current and/or voltage.
  - It cannot be subdivided into other elements.
  - It has only two terminals, which are points of connection to other circuit components;.

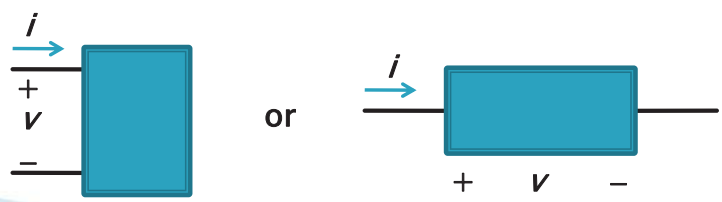

Copyright ©2015 Pearson Education, All Rights Reserved

Circuit Variables

- Power
  - Definition – The time rate of expending or absorbing energy.
  - Defn. Eq.:

$$p = \frac{dw}{dt}$$

p Power [Watt – W]
w Energy [Joule – J]
t Time [Second – s]

  - Therefore integrating power over time gives energy.

Circuit Variables

- Power (cont.)

$$p = \frac{dw}{dt} = \frac{dw}{dq} \cdot \frac{dq}{dt} = vi$$

$$\boxed{p = vi}$$

  - The power associated with a basic circuit element is simply the product of the current in the element and the voltage across the element.

Circuit Variables

- Power (cont.)
  - Real equation,

$$\boxed{p = \pm vi}$$

  - Which sign should we use?

"If the reference direction for the current is in the direction of the reference voltage drop across the terminals then the sign should be positive. Otherwise it should be negative."

Circuit Variables

- Passive Sign Convention:

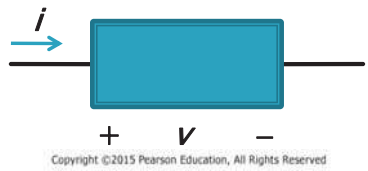

- If the current moves toward + terminal then the sign in the power equation is +. If current moves in the opposite direction then – is used.

- For the ideal basic circuit element above,

$$p = +vi = vi$$

Circuit Variables

- Question 1: Passive sign convention examples:

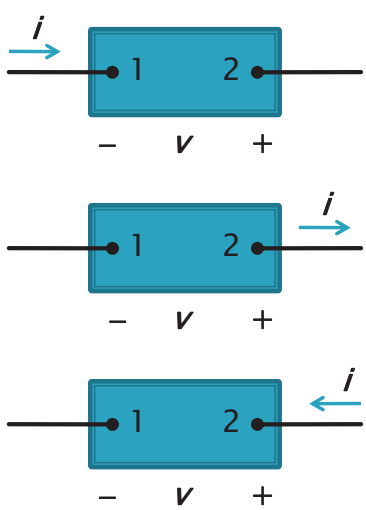

$$p = -vi$$

$$p = -vi$$

$$p = +vi = vi$$

Circuit Variables

- What does positive and negative power mean?
  - If the power is negative (that is, if $p<0$), power is being extracted from the circuit element. The element generates power to the circuit.
  - If the power is positive (that is, if $p>0$), power is being delivered to the circuit element. The element dissipates power.

Circuit Variables

- Question 2: Examples related to the sign of power

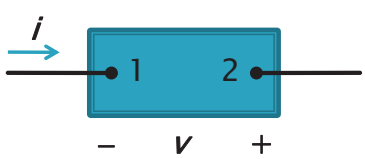

i=4A V=–10V
Generating or dissipating?
Dissipating

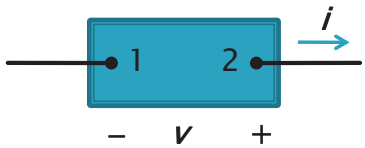

i=4A V=–10V
Generating or dissipating?
Dissipating

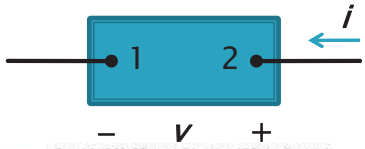

i=4A V=–10V
Generating or dissipating?
Generating

Copyright ©2015 Pearson Education, All Rights Reserved

Circuit Variables

The power in a circuit is always at balance!

According to the law of conservation of energy, the total generated power in a circuit should be equal to the total dissipated power.

It will be beneficial to check the power balance when analyzing circuits.

Circuit Variables

- Question 3: Find the powers of the elements below. Are they generating or dissipating power?

$$p = -vi = -(20)(4) = -80 \text{ W} \qquad p = vi = (20)(4) = 80 \text{ W}$$

Circuit Variables

- Question 3: Find the powers of the elements below. Are they generating or dissipating power?

Copyright ©2015 Pearson Education, All Rights Reserved

$$p = -vi = -(20)(4) = -80 \text{ W} \quad \Rightarrow \quad 80 \text{ W}$$ generate

$$p = vi = (20)(4) = 80 \text{ W} \quad \Rightarrow \quad 80 \text{ W}$$ dissipate

Course Contents

- ~~Circuit Components and Variables,~~ Ohm's Law and Kirchoff's Laws
- Circuit Analysis Techniques I - Node Voltage & Mesh Current Methods
- Circuit Analysis Techniques II - Thevenin and Norton Equivalent Circuits
- First Order RL and RC Circuits
- Phasor Concept and AC Analysis of Circuits
- Midterm
- Introduction to Semiconductors
- Diode Applications
- BJT Analysis
- FET Analysis
- Operational Amplifier
- Midterm
- Logic Gates
- Make-up Exams

ELE 296 Basic Electric Circuits and Electronics

- Circuit Components
  - Voltage and Current Sources
  - The Resistor
- Ohm's Law
- Kirchoff's Laws
  - Kirchoff Current Law
  - Kirchoff Voltage Law
- Simple Resistive Circuits
  - Resistors Connected in Series
  - Resistors Connected in Parallel

Circuit Components

- Ideal DC Voltage Source.

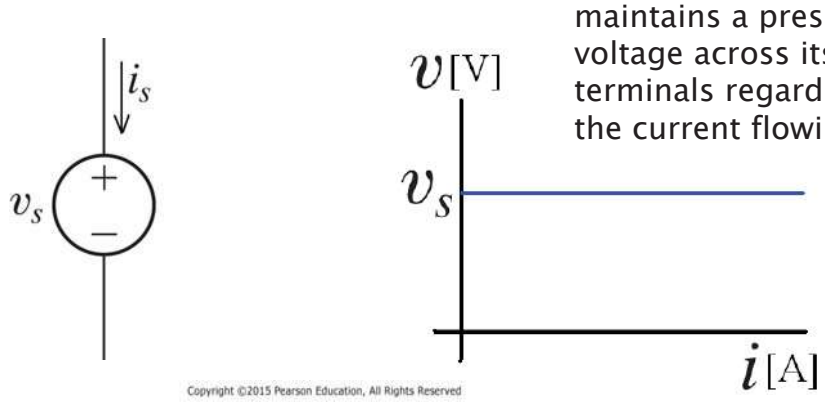

maintains a prescribed voltage across its terminals regardless of the current flowing

Copyright ©2015 Pearson Education, All Rights Reserved

- To specify an ideal independent voltage source, you must include the value of the supplied voltage and the reference polarity.

Circuit Components

- Ideal DC Current Source.

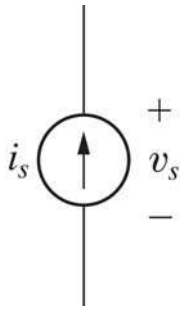

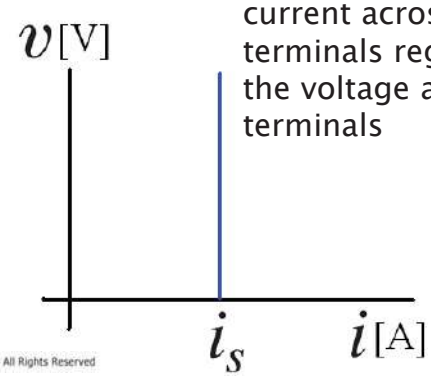

maintains a prescribed current across its terminals regardless of the voltage across terminals

Copyright ©2015 Pearson Education, All Rights Reserved

- To specify an ideal independent current source, you must include the value of the supplied current and its reference direction.

Circuit Components

- An independent source establishes a voltage or current in a circuit without relying on voltages or currents elsewhere in the circuit.The value of the voltage or current supplied is specified by the value of the independent source alone.

- A dependent source establishes a voltage or current whose value depends on the value of a voltage or current elsewhere in the circuit. In the context of this course we will only deal with independent sources.

Circuit Components

- Interconnections of Ideal Sources
  You have to check each constraint of each source in order to decide if the connection is valid or not.

- Qn. 1:

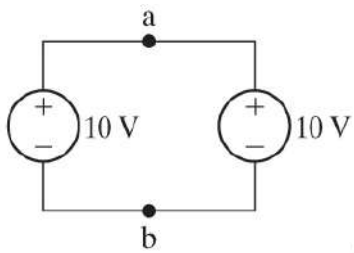

Valid

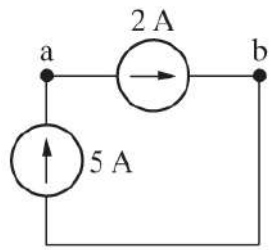

Copyright ©2015 Pearson Education, All Rights Reserved

Invalid

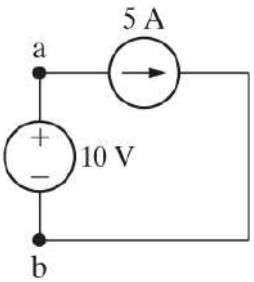

Valid

Circuit Components

- Electrical Resistance

  - **Resistance** is the capacity of materials to impede the flow of current (electric charge).

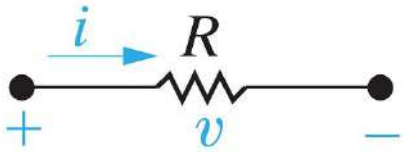

Copyright ©2015 Pearson Education, All Rights Reserved

v Voltage [Volt – V]
i Current [Ampere – A]
R Resistance [Ohm – Ω]

Circuit Components

- Resistance (cont.)

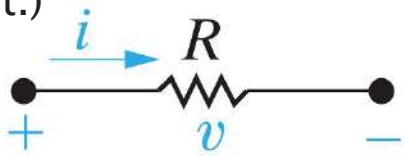

Copyright ©2015 Pearson Education, All Rights Reserved

Ohm's law is the algebraic relationship between voltage and current for a resistor.

$$\boxed{v = \pm Ri}$$

Positive or negative sign is a cause of the passive sign convention. For the above example the sign should be positive.

Circuit Components

- Resistance (cont.)
  Calculation of the power on a resistance

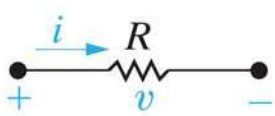

$$p = +vi = (Ri)i$$
$$= Ri^2 > 0$$

Copyright ©2015 Pearson Education, All Rights Reserved

$$\boxed{\begin{aligned} p &= -vi = -(-Ri)i \\ &= Ri^2 > 0 \end{aligned}}$$

Power on a resistor is **always** positive. Therefore, a resistor always dissipates power.

Circuit Components

- Qn. 2:
  For the circuit on the right
  (a) $v_g = 1$ kV and $i_g = 5$ mA,
  Find the value of the resistor and the power dissipated in the circuit.

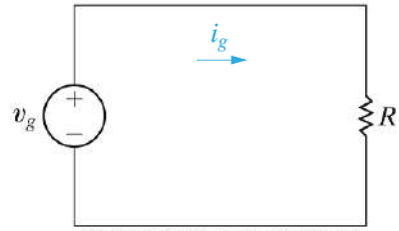

Copyright ©2015 Pearson Education, All Rights Reserved

$$R = +\frac{v_g}{i_g} = \frac{1000\text{ V}}{5\text{ mA}} = \frac{1000}{0.005} = 200{,}000\Omega = 200\text{ k}\Omega$$

$$p_R = Ri_g^2 = (200{,}000)(0.005)^2 = 5\text{ W}$$

Circuit Components

- Qn. 2 (cont.):

  (b) $i_g = 75$ mA and $p_g = -3$ W,
  Find the voltage v_g and the power dissipated by the resistor

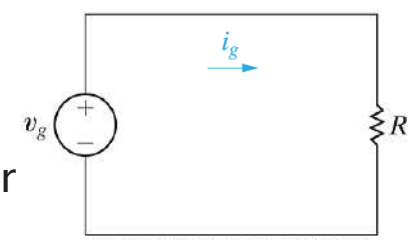

Copyright ©2015 Pearson Education, All Rights Reserved

$$p_g = -v_g i_g \quad \Rightarrow \quad v_g = -\frac{p_g}{i_g} = -\frac{(-3)}{0.075} = 40\text{ V}$$

$$\text{R} = \frac{\text{v}_\text{g}}{\text{i}_\text{g}} = \frac{40}{0.075} = 533.33\Omega$$

$$p_R = Ri_g^2 = (533.33)(0.075)^2 = 3\text{ W}$$

or... $\quad p_R = -p_g = -(-3) = 3\text{ W!}$

Law of Conservation of Energy

Kirchhoff's Laws

Kirchhoff's Current Law

The algebraic sum of all the currents at any node in a circuit equals zero..

- A node is a point where two or more circuit elements meet.

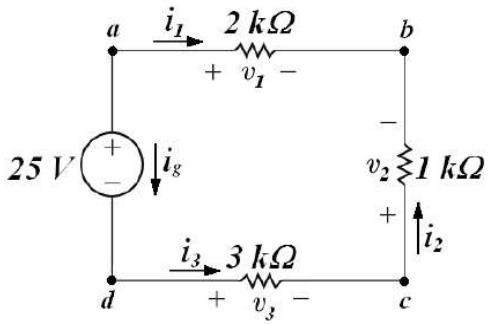

Copyright ©2015 Pearson Education, All Rights Reserved

$$\begin{aligned} &a: && i_g + i_1 = 0 \\ &b: && i_1 + i_2 = 0 \\ &c: && i_2 = i_3 \\ &d: && -i_g + i_3 = 0 \end{aligned}$$

Kirchhoff's Laws

- Qn. 3: Write the KCLs for each node (a–d).

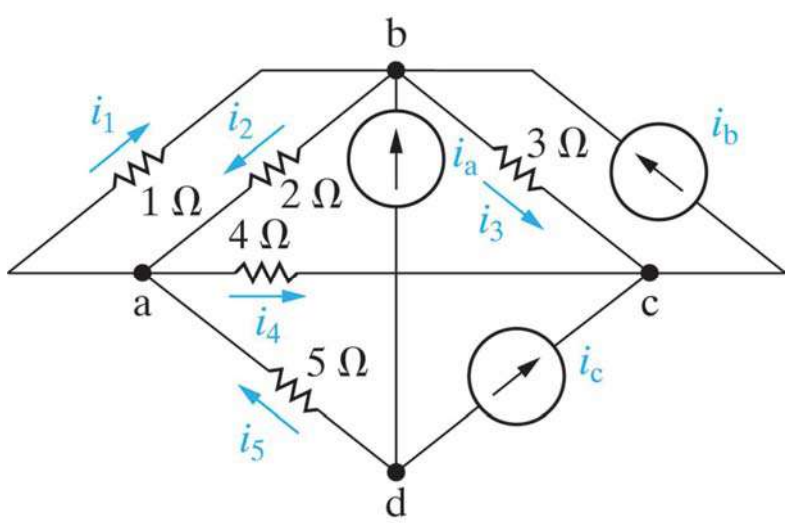

Copyright ©2015 Pearson Education, All Rights Reserved

Kirchhoff's Laws

Kirchhoff's Voltage Law

The algebraic sum of all the voltages around any closed path (loop or mesh) in a circuit equals zero.

- Starting at an arbitrarily selected node, we trace a closed path in a circuit through selected basic circuit elements and return to the original node without passing through any intermediate node more than once.

Kirchhoff's Laws

Kirchhoff's Voltage Law

The algebraic sum of all the voltages around any closed path (loop or mesh) in a circuit equals zero.

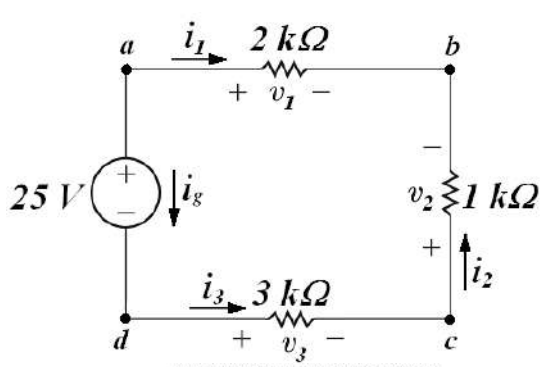

Copyright ©2015 Pearson Education, All Rights Reserved

Starting from the node a and summing clockwise.

$$+v_1 - v_2 - v_3 - 25 = 0$$

Kirchhoff's Laws

- Qn. 4: Write KVLs for each closed path (a–d).

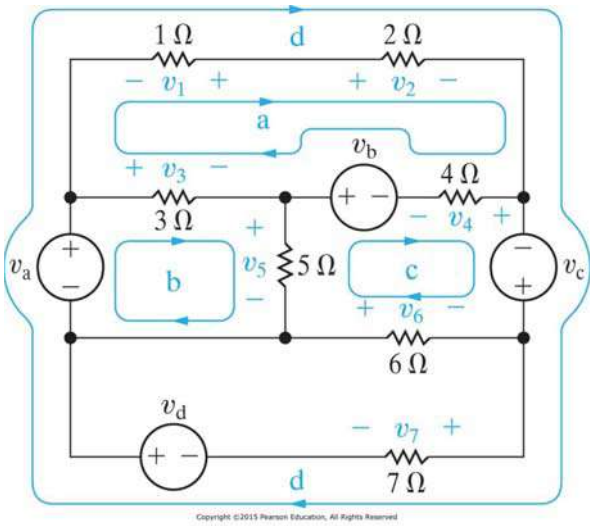

Simple Resistive Circuits

- Resistors in Series:
  According to KCL the currents on all resistors should be the same.

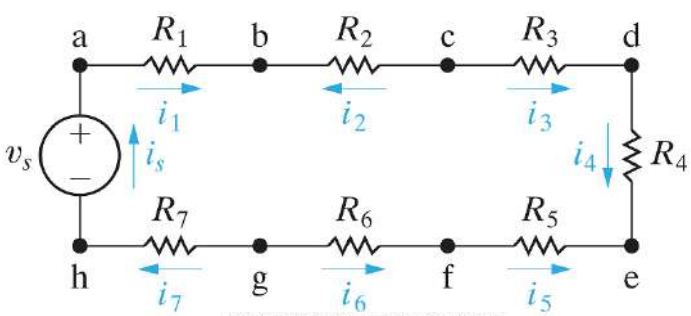

$$\boxed{i_1 = -i_2 = i_3 = i_4 = -i_5 = -i_6 = i_7 = i_s}$$

Simple Resistive Circuits

- Resistors in Series (cont.)
  Calculation of equivalent resistance.

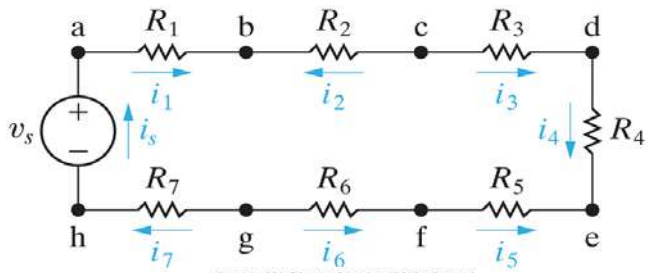

Copyright ©2015 Pearson Education, All Rights Reserved

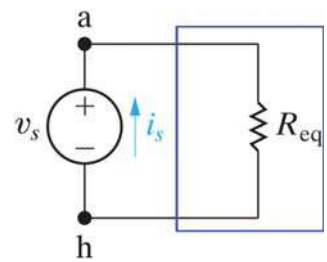

$$\text{KVL}: -v_s + R_1 i_s + R_2 i_s + \cdots + R_7 i_s = 0$$

$$\Rightarrow \quad v_s = (R_1 + R_2 + \cdots + R_7) i_s$$

$$\text{KVL}: -v_s + R_{eq} i_s = 0$$

$$\Rightarrow \quad v_s = (R_{eq}) i_s$$

Resistors in series are added: $R_{eq} = (R_1 + R_2 + \cdots + R_7)$

Equivalent resistance is higher than each resistor in the series circuit.

Simple Resistive Circuits

- Qn. 5: Which resistors are connected in series?

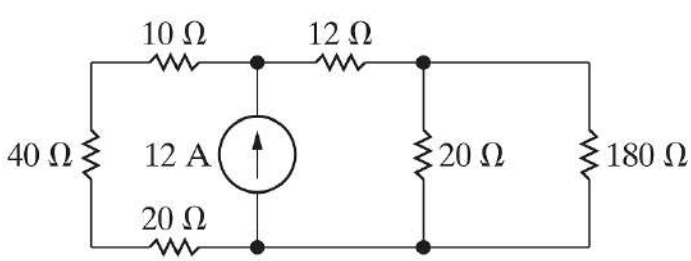

Copyright ©2015 Pearson Education, All Rights Reserved

Simple Resistive Circuits

- Qn. 5 (cont.): Which resistors are connected in series?

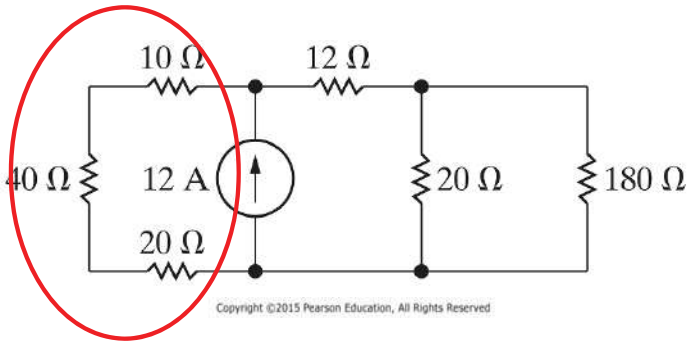

Simple Resistive Circuits

- Voltage Divider:
  Find the voltage on a resistor, e.g., R_4.

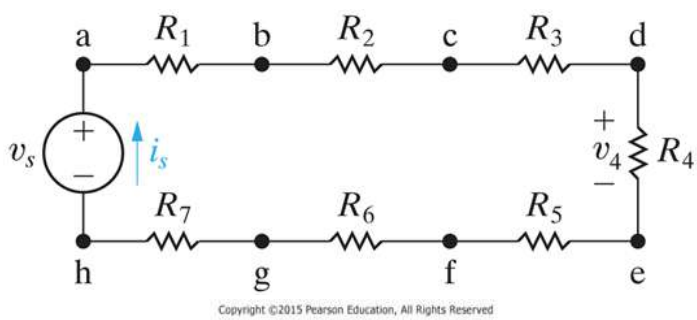

$$v_4 = R_4 i_s = R_4 \frac{v_s}{(R_1 + R_2 + \cdots + R_7)} = \frac{R_4}{R_{eq}} v_s$$

Voltage is divided linearly proportional with the resistance levels for series connected resistors.

Simple Resistive Circuits

- Resistors in Parallel:
  Both terminals shouldbe connected to each other. According to KVL theri voltages should be equal.

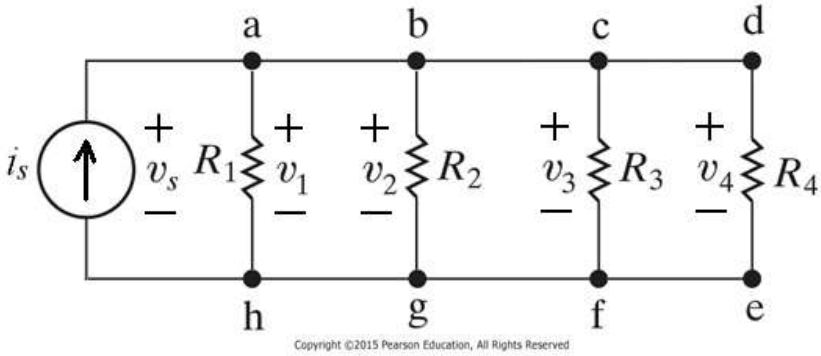

$$\boxed{v_1 = v_2 = v_3 = v_4 = v_s}$$

Simple Resistive Circuits

- Resistors in Parallel (cont.)
  Calculation of the equivalent resistance.

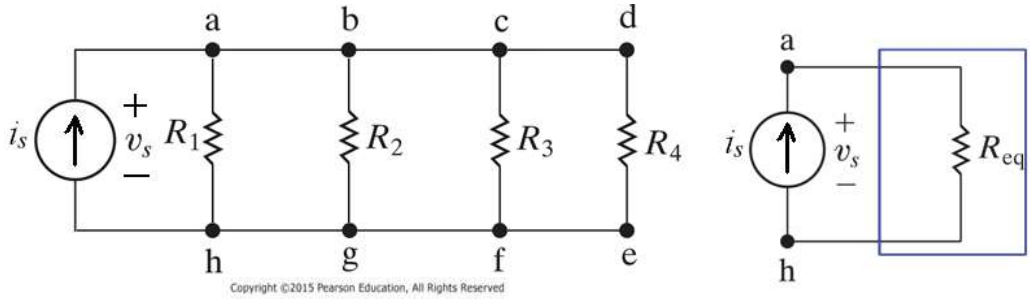

$$\text{KCL}: -i_s + v_s/R_1 + v_s/R_2 + \cdots + v_s/R_4 = 0 \qquad \text{KCL}: -i_s + v_s/R_{eq} = 0$$

$$\Rightarrow \quad i_s = (1/R_1 + 1/R_2 + \cdots + 1/R_4)v_s \qquad \Rightarrow \quad i_s = v_s/(R_{eq})$$

$$\boxed{\text{Resistors in Parallel:} \quad 1/R_{eq} = (1/R_1 + 1/R_2 + \cdots + 1/R_4)}$$

Equivalent resistance is smaller than each resistor in the parallel circuit.

Simple Resistive Circuits

- Qn. 6: Which resistors are connected in parallel?

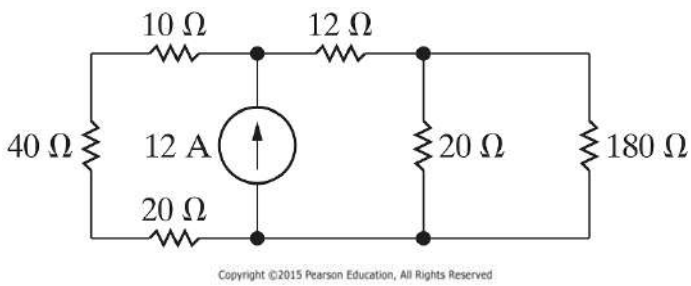

Simple Resistive Circuits

- Qn. 6 (cont.): Which resistors are connected in parallel?

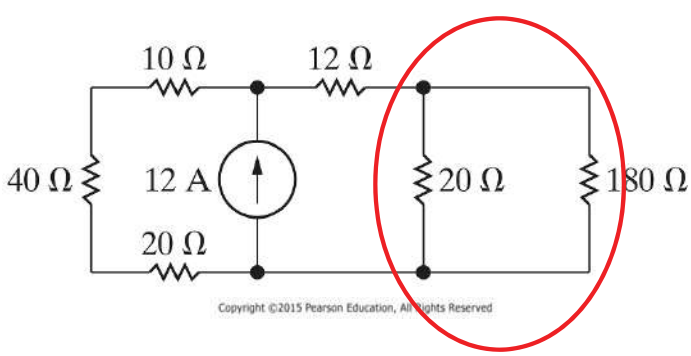

Simple Resistive Circuits

- Current Divider:
  Find the voltage on a resistor, e.g., R_3.

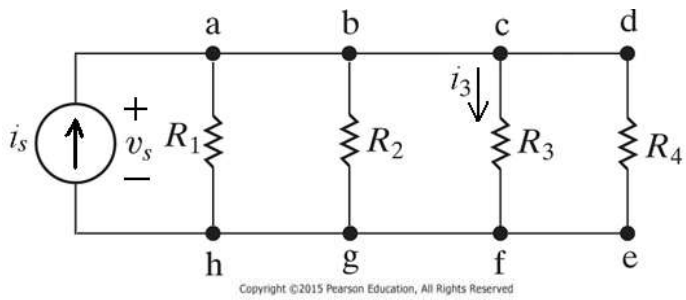

$$i_3 = \frac{v_s}{R_3} = \frac{R_{eq} i_s}{R_3} = \frac{R_{eq}}{R_3} i_s$$

Current is divided inversely proportional with the resistance levels for parallel connected resistors.

Simple Resistive Circuits

- Qn. 7: Find the equivalent resistance seen by the sources.

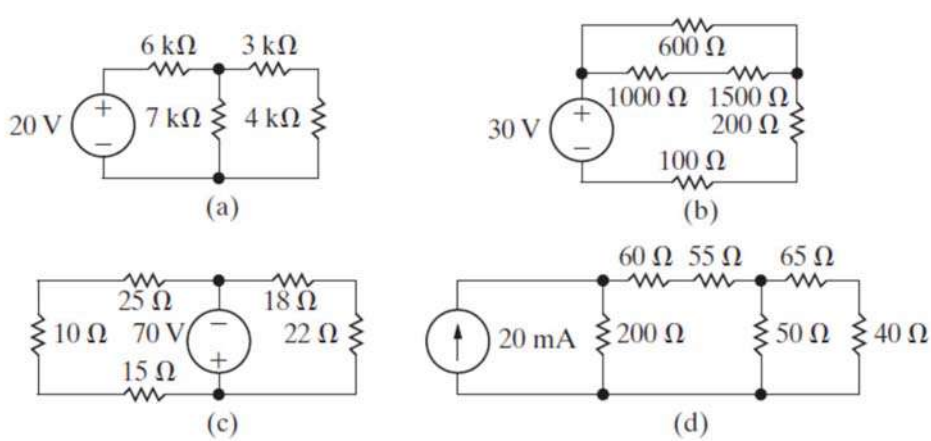

Simple Resistive Circuits

- Qn. 8: Find the equivalent resistance seen by the sources.

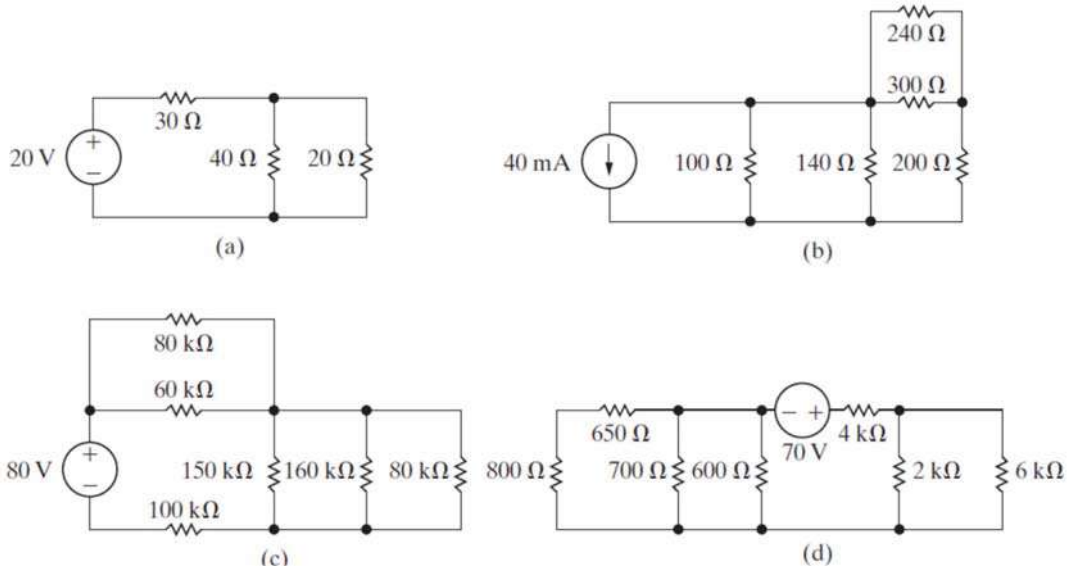

Simple Resistive Circuits

- Qn. 9: Find the equivalent resistance seen by the terminals ab.

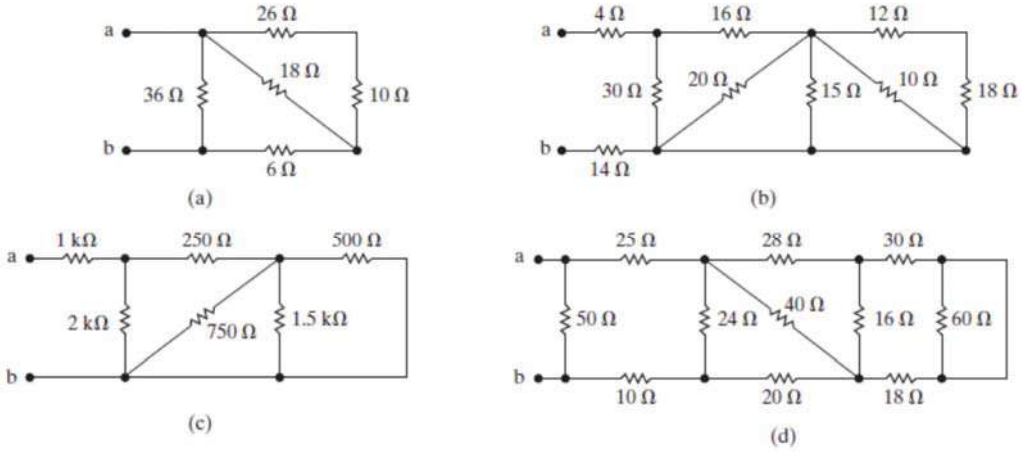

Course Content

- ~~Circuit Components and Variables, Ohm's Law and Kirchoff's Laws~~
- Circuit Analysis Techniques I - Node Voltage & Mesh Current Methods
- Circuit Analysis Techniques II - Thevenin and Norton Equivalent Circuits
- First Order RL and RC Circuits
- Phasor Concept and AC Analysis of Circuits
- Midterm
- Introduction to Semiconductors
- Diode Applications
- BJT Analysis
- FET Analysis
- Operational Amplifier
- Midterm
- Logic Gates
- Make-up Exams

Questions

- Qn. 10: Find i_0.

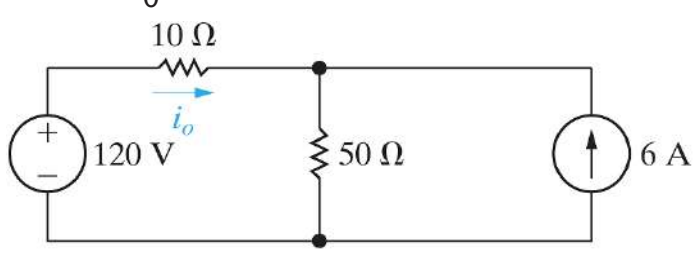

Copyright ©2015 Pearson Education, All Rights Reserved

•First define reference current directions and reference voltage polarities.

Questions

- Qn. 10 (cont.): Find i_0.

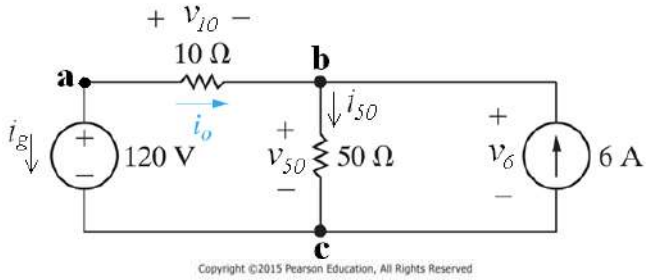

•Then use Ohm's Law, KCL, and KVL to find the current.

Questions

- Qn. 10 (cont.): Find i_0.

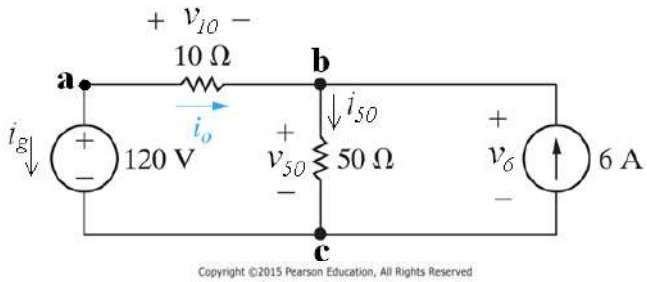

•Ohm's Law : $v_{50} = 50 i_{50}$; $v_{10} = 10 i_o$

Questions

- Qn. 10 (cont.): Find i_0.

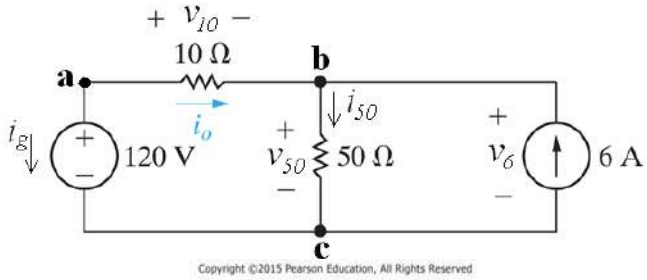

•Ohm's Law : $v_{50} = 50 i_{50}; \qquad v_{10} = 10 i_o$

•KCL : $a: i_g + i_o = 0; \qquad b: i_o + 6 = i_{50}$

Questions

- Qn. 10 (cont.): Find i_0.

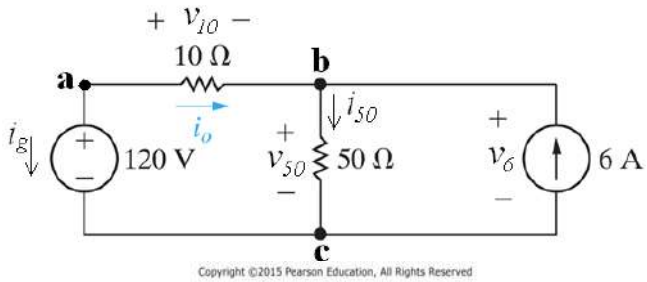

•Ohm's Law : $v_{50} = 50 i_{50}; \qquad v_{10} = 10 i_o$

•KCL : $a: i_g + i_o = 0; \qquad b: i_o + 6 = i_{50}$

•KVL : $\text{left}: -120 + v_{10} + v_{50} = 0; \qquad \text{right}: -v_{50} + v_6 = 0$

Questions

- Qn. 10 (cont.): Find i_0.

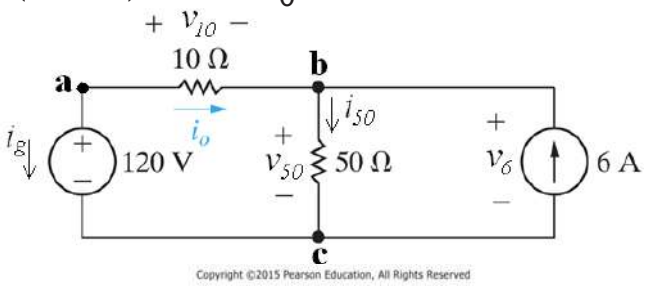

$$\left.\begin{array}{l} \text{left}: -120 + v_{10} + v_{50} = 0 \\ v_{50} = 50 i_{50}; \qquad v_{10} = 10 i_o \end{array}\right\} 10 i_o + 50 i_{50} = 120$$

$$\left.\begin{array}{l} 10 i_o + 50 i_{50} = 120 \\ \text{b}: i_o + 6 = i_{50} \end{array}\right\} 10 i_o + 50(i_o + 6) = 120$$

$$\boxed{60 i_o = -180 \Rightarrow i_o = -3 \text{ A}}$$

Questions

- Qn. 10 (cont.): Find i_0. Let's check the conservation of energy (power).

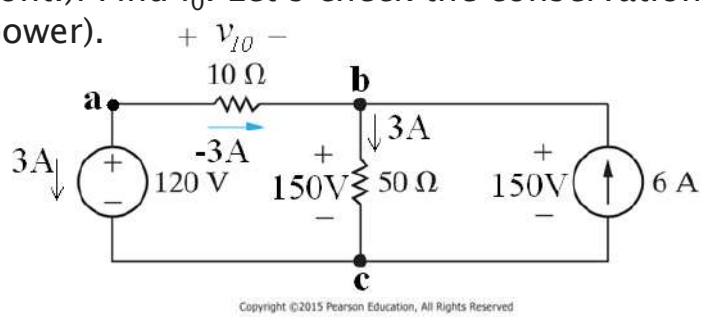

$$p_{120V} = (120)(3) = 360 \text{ W}$$

$$p_{10\Omega} = (10)(-3)^2 = 90 \text{ W}$$

$$p_{50\Omega} = (50)(3)^2 = 450 \text{ W}$$

$$p_{6A} = -(150)(6) = -900 \text{ W}$$

Questions

- Qn. 11: Is the connection below valid? If its valid then find the Powers of each circuit component.

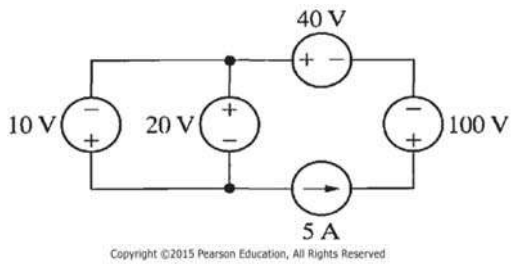

Questions

- Qn. 11 (cont.): Is the connection below valid? If its valid then find the Powers of each circuit component.

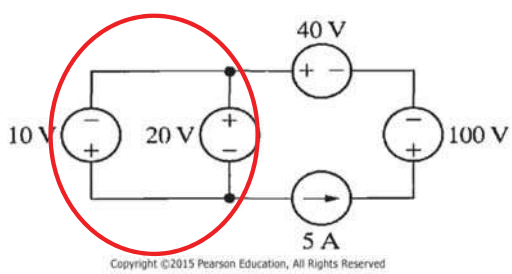

Not valid.

Questions

- Qn. 12: Is the connection below valid? If its valid then find the Powers of each circuit component.

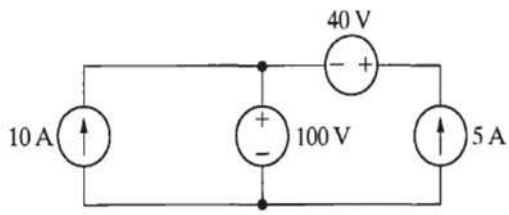

Copyright ©2015 Pearson Education, All Rights Reserved

Questions

- Qn. 12 (cont.): Is the connection below valid? If its valid then find the Powers of each circuit component.

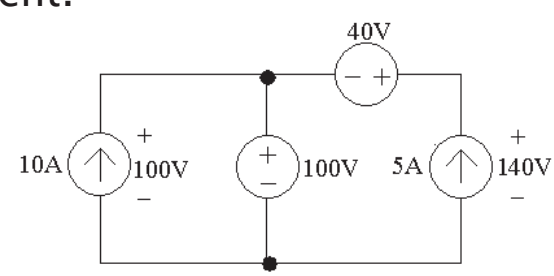

Copyright ©2015 Pearson Education, All Rights Reserved

Connection is valid.

$$P_{I1} = -(10A)(100V) = -1000W$$
$$P_{I2} = -(5A)(140V) = -700W$$
$$P_{V1} = +(15A)(100V) = 1500W$$
$$P_{V2} = +(5A)(40V) = 200W$$

Questions

- Qn. 13: For the circuit below, $i_0 = 1A$.
  - Find i_1.
  - Find powers dissipated by each resistor.
  - Show that powers are balanced.

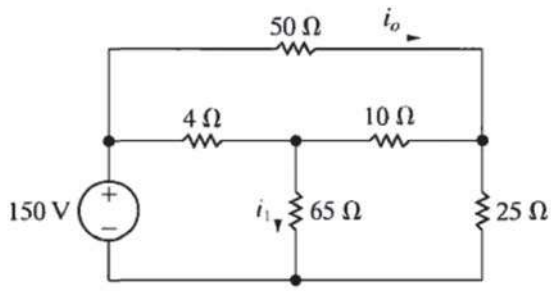

Copyright ©2015 Pearson Education, All Rights Reserved

Questions

- Qn. 13 (cont.):

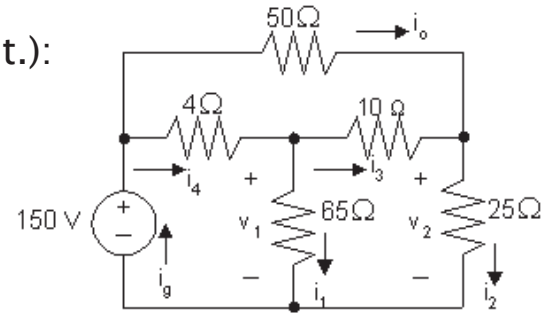

Copyright ©2015 Pearson Education, All Rights Reserved

$$\text{KVL}: v_2 = 150 - 50(1) = 100V$$

$$\text{Ohm}: i_2 = \frac{100}{25} = 4A$$

$$\text{KCL}: i_3 = i_2 - 1 = 3A$$

$$\text{KVL}: v_1 = 10i_3 + 25i_2 = 10(3) + 25(4) = 130V$$

$$\boxed{\text{Ohm}: i_1 = \frac{130}{65} = 2A}$$

- Moreover;

$$\text{KCL}: i_4 = i_1 + i_3 = 5A$$

$$\text{KCL}: i_g = i_0 + i_4 = 6A$$

Questions

- Qn. 13 (cont.):

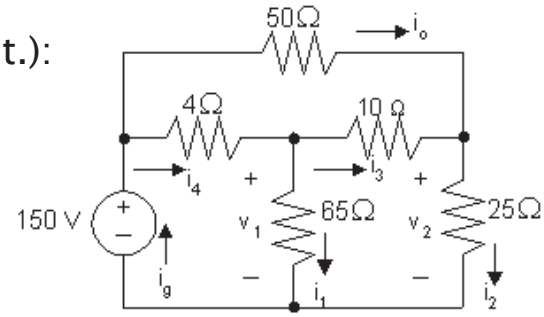

Copyright ©2015 Pearson Education, All Rights Reserved

$$P_{4\Omega} = (5)^2 4 = 100W$$
$$P_{50\Omega} = (1)^2 50 = 50W$$
$$P_{65\Omega} = (2)^2 65 = 260W$$
$$P_{10\Omega} = (3)^2 10 = 90W$$
$$P_{25\Omega} = (4)^2 25 = 400W$$

$$\sum P_{\Omega} = 100 + 50 + 260 + 90 + 400 = 900W$$
$$P_{150V} = -V_g i_g = -150 i_g = -150(6) = -900W$$

Questions

- Qn. 14: The variable resistance is selected such that V_a=60V. What is the value of the variable resistance R?

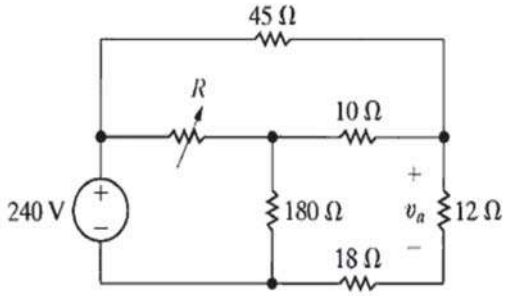

Copyright ©2015 Pearson Education, All Rights Reserved

Questions

- Qn. 14 (cont.):

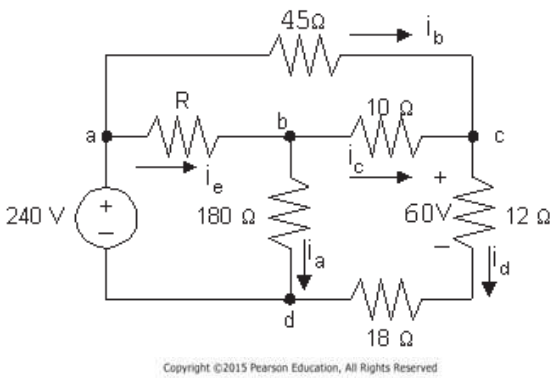

$$i_d = \frac{60}{12} = 5A \Rightarrow v_{cd} = 60 + 18(5) = 150V$$

$$-240 + v_{ac} + v_{cd} = 0 \Rightarrow v_{ac} = 240 - 150 = 90V$$

$$i_b = \frac{v_{ac}}{45} = \frac{90}{45} = 2A \Rightarrow i_c = i_d - i_b = 5 - 2 = 3A$$

$$v_{bd} = 10 i_c + v_{cd} = 10(3) + 150 = 180V \Rightarrow i_a = \frac{v_{bd}}{180} = \frac{180}{180} = 1A$$

$$i_e = i_a + i_c = 1 + 3 = 4A$$

$$-240 + v_{ab} + v_{bd} = 0 \Rightarrow v_{ab} = 240 - 180 = 60V$$

$$\boxed{R = \frac{v_{ab}}{i_e} = \frac{60}{4} = 15\Omega}$$

ELE 296 Basic Electric Circuits and Electronics

- Simple Resistive Circuits (Review)
- Circuit Analysis Techniques I
  - Node Voltage Method
  - Mesh Current Method

Rules

- 1st Midterm 20% – 2nd Midterm 20% – Final 60%
- Make up for midterms are only possible if you have valid sick reports. Please don't ask to have a make up if you don't have one.
- There will not be a make up for the final exam.
- You can not leave the exam room for the first 30 mins.
- You may not join an exam if you are late more than 30 mins.

Simple Resistive Circuits

- Resistors in Series (cont.)
  Calculation of equivalent resistance.

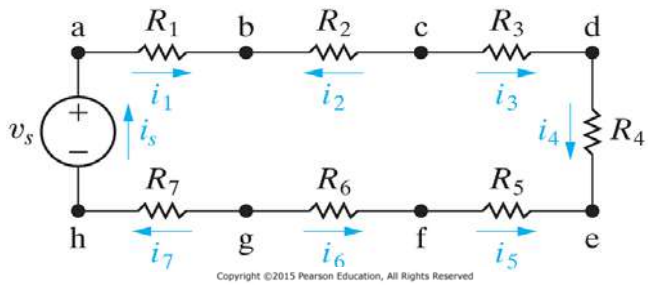

Copyright ©2015 Pearson Education, All Rights Reserved

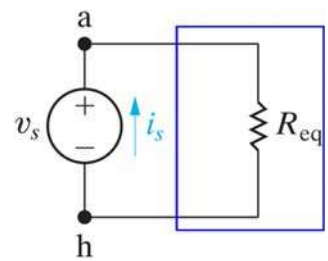

$$\text{KVL}: -v_s + R_1 i_s + R_2 i_s + \cdots + R_7 i_s = 0 \qquad \text{KVL}: -v_s + R_{eq} i_s = 0$$

$$\Rightarrow \quad v_s = (R_1 + R_2 + \cdots + R_7) i_s \qquad \Rightarrow \quad v_s = (R_{eq}) i_s$$

Resistors in series are added: $R_{eq} = (R_1 + R_2 + \cdots + R_7)$

Equivalent resistance is higher than each resistor in the series circuit.

Simple Resistive Circuits

- Voltage Divider:
  Find the voltage on a resistor, e.g., R_4.

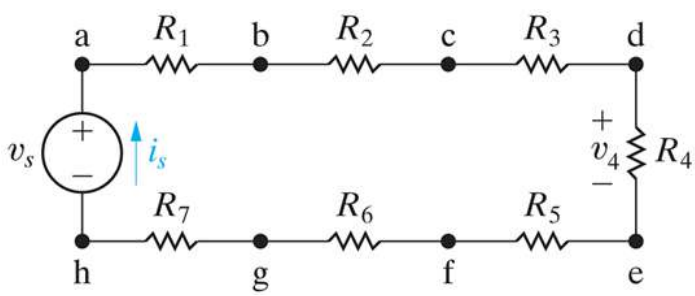

Copyright ©2015 Pearson Education, All Rights Reserved

$$v_4 = R_4 i_s = R_4 \frac{v_s}{(R_1 + R_2 + \cdots + R_7)} = \frac{R_4}{R_{eq}} v_s$$

Voltage is divided linearly proportional with the resistance levels for series connected resistors.

Simple Resistive Circuits

- Resistors in Parallel (cont.)
  Calculation of the equivalent resistance.

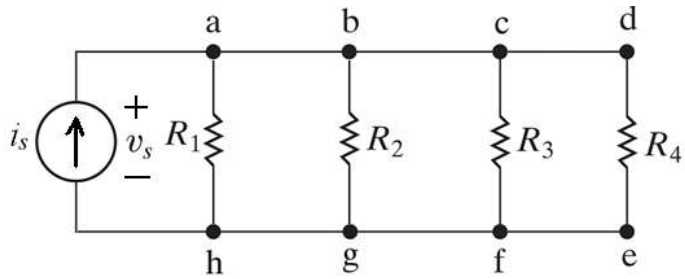

Copyright ©2015 Pearson Education, All Rights Reserved

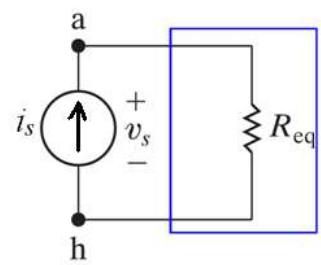

$$\text{KCL}: -i_s + v_s/R_1 + v_s/R_2 + \cdots + v_s/R_4 = 0 \qquad \text{KCL}: -i_s + v_s/R_{eq} = 0$$

$$\Rightarrow \quad i_s = (1/R_1 + 1/R_2 + \cdots + 1/R_4)v_s \qquad \Rightarrow \quad i_s = v_s/(R_{eq})$$

$$\boxed{\text{Resistors in Parallel:} \quad 1/R_{eq} = (1/R_1 + 1/R_2 + \cdots + 1/R_4)}$$

Equivalent resistance is smaller than each resistor in the parallel circuit.

Simple Resistive Circuits

- Current Divider:
  Find the voltage on a resistor, e.g., R_3.

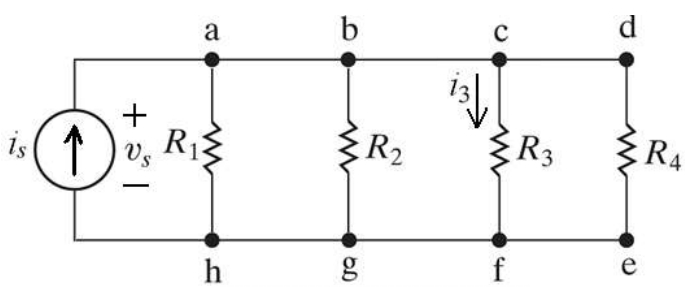

Copyright ©2015 Pearson Education, All Rights Reserved

$$i_3 = \frac{v_s}{R_3} = \frac{R_{eq} i_s}{R_3} = \frac{R_{eq}}{R_3} i_s$$

Current is divided inversely proportional with the resistance levels for parallel connected resistors.

Simple Resistive Circuits

- Qn. 1: Find v, i, and v_{10}.

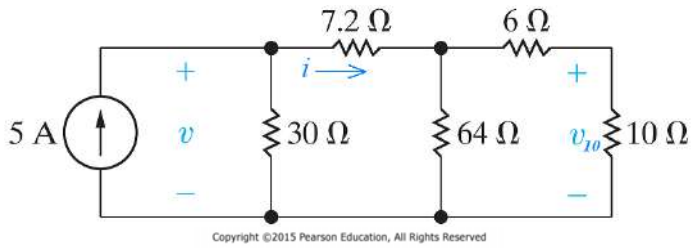

$$\text{Series} \quad : 6 + 10 = 16\Omega$$
$$\text{Parallel} \quad : 64 \,||\, 16 = 12.8\Omega$$
$$\text{Series} \quad : 12.8 + 7.2 = 20\Omega$$
$$\text{Parallel} \quad : 30 \,||\, 20 = 12\Omega$$

Equivalent Resistance

$$\text{Ohm} : v = R_{eq}(5) = (12)(5) = 60 \text{ V}$$
$$\text{KCL} : i = \frac{R_{eq}}{R}(5) = \frac{30 \,||\, 20}{20}(5) = 3 \text{ A}$$
$$\text{Ohm} : v' = i(64 \,||\, 16) = (3)(12.8) = 38.4 \text{ V}$$
$$\text{KVL} : v_{10} = \frac{10}{10+6} v' = \frac{10}{16}(38.4) = 24 \text{ V}$$

Simple Resistive Circuits

- Measurement of Current And Voltage:
  with ideal devices:

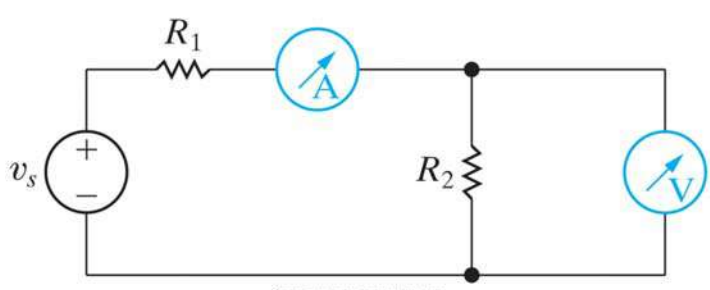

Amperemeter is connected in series. Internal resistance is 0.
Voltmeter is connected in parallel. Internal resistance is ∞.

Simple Resistive Circuits

- Measurement of Current And Voltage (cont.): with non-ideal analog devices:

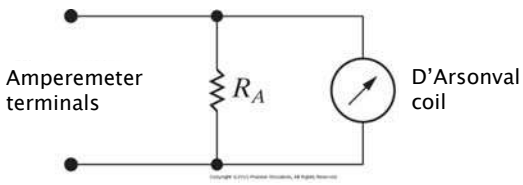

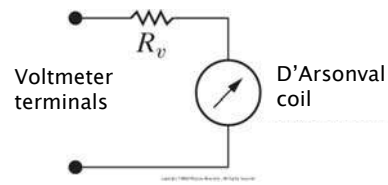

- The parallel resistance limits the current through the coil.
- The serial resistor limits the voltage on the coil.

A movement occurs in the analog device that is directly proportionally with the current.

Simple Resistive Circuits

- Qn. 2: A d'Arsonval coil with spec.s 50mV, 1mA will be used as an amperemeter to measure 1A. Find R_A.
  - Then, find the total resistance added to circuit.

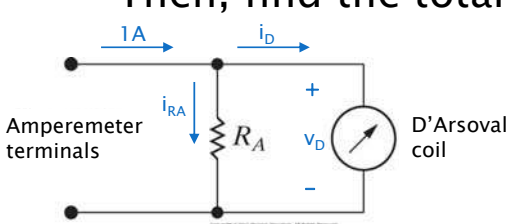

$$v_D = 50mV$$

$$i_D = 1mA$$

$$\text{KCL}: i_{RA} = 1A - i_D = 999mA$$

$$\text{Ohm}: R_A = \frac{v_D}{i_{RA}} = \frac{50}{999} \cong 50.05m\Omega$$

$$R_D = \frac{v_D}{i_D} = \frac{50}{1} = 50\Omega \;\Rightarrow\; R_{Eq} = R_A // R_D \cong 50m\Omega$$

or

$$R_{Eq} = \frac{v_D}{i_D + i_{RA}} = \frac{50mV}{1A} = 50m\Omega$$

Simple Resistive Circuits

- Resistance Measurement:
  with ideal devices:

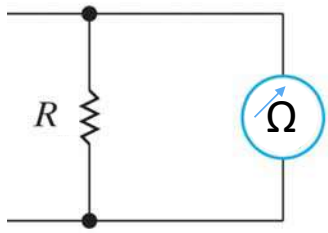

Ohmmeter is connected in parallel. Internal resistance is ∞.
When measuring resistance you should disconnect it from the circuit.

Simple Resistive Circuits

- Resistance Measurement (cont.):
  with non-ideal analog devices:

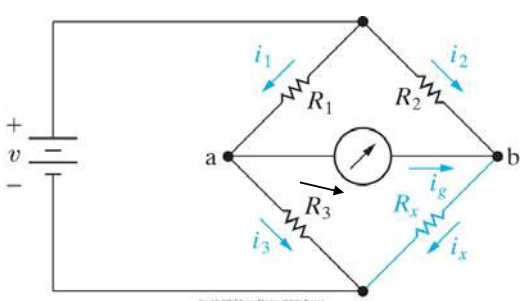

Set the variable resistance such that the current i_g is equal to zero.

$$i_g = 0 \;\Rightarrow\; v_{ab} = 0 \;\Rightarrow\; v_a = v_b$$

$$i_1 = i_3, \quad i_2 = i_x$$

$$i_1 R_1 = i_2 R_2$$

$$i_3 R_3 = i_x R_x \;\Rightarrow\; i_1 R_3 = i_2 R_x$$

$$\frac{i_1 R_1}{i_1 R_3} = \frac{i_2 R_2}{i_2 R_x} \;\Rightarrow\; R_x = \frac{R_2}{R_1} R_3$$

Simple Resistive Circuits

- Qn. 3: The Wheatstone bridge given is in balance when R1=100, R2=1000, and R3=150. What is Rx.

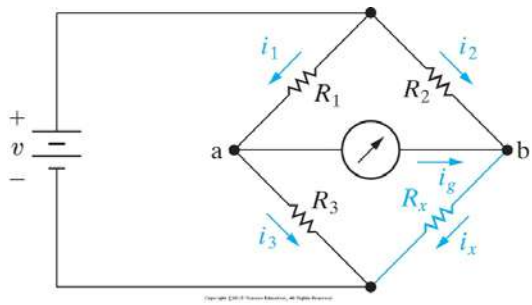

$$R_x = \frac{1000}{100} 150 = 1500\Omega$$

Simple Resistive Circuits

- Delta-Y (Pi-T) Equivalent Circuit:

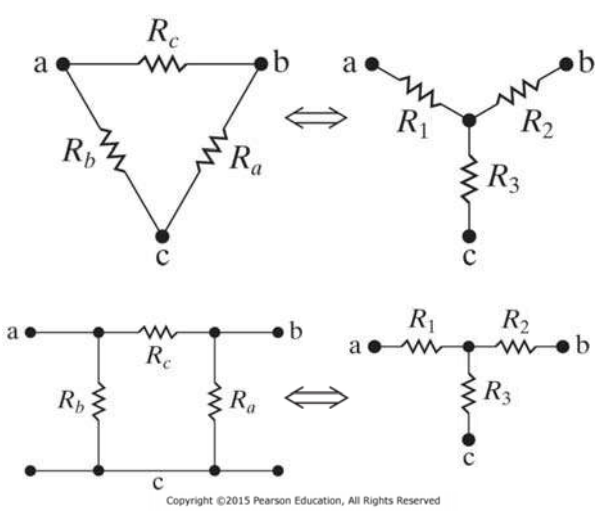

Copyright ©2015 Pearson Education, All Rights Reserved

$$R_1 = \frac{R_b R_c}{R_a + R_b + R_c}$$

$$R_2 = \frac{R_a R_c}{R_a + R_b + R_c}$$

$$R_3 = \frac{R_a R_b}{R_a + R_b + R_c}$$

Simple Resistive Circuits

- Delta–Y (Pi–T) Equivalent Circuit:

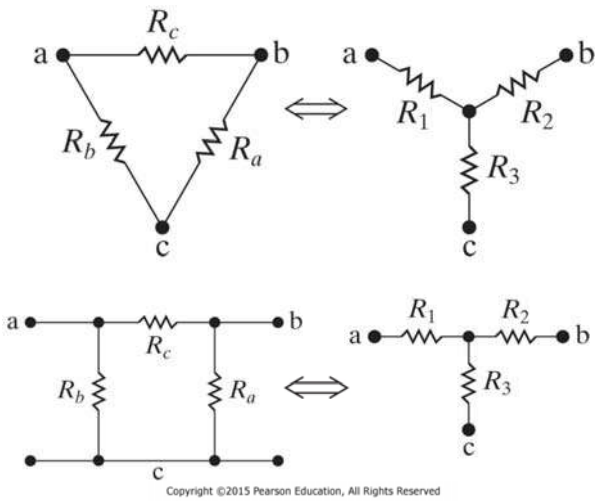

$$R_a = \frac{R_1R_2 + R_2R_3 + R_1R_3}{R_1}$$

$$R_b = \frac{R_1R_2 + R_2R_3 + R_1R_3}{R_2}$$

$$R_c = \frac{R_1R_2 + R_2R_3 + R_1R_3}{R_3}$$

Circuit Analysis Techniques

- Node
  Point that connects at least two circuit elements.
- Essential Node
  ?
- Mesh
  Path that has same start anc end nodes.
- Essential Mesh
  ?

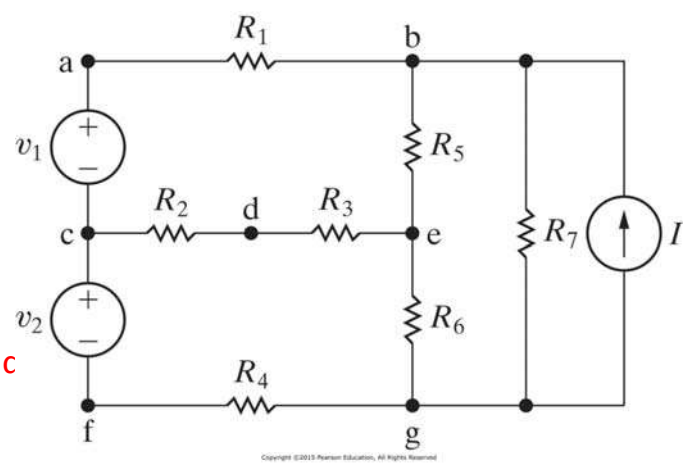

Circuit Analysis Techniques

- Node
  Point that connects at least two circuit elements.
- Essential Node
  Point that connects at least three circuit elements.
- Mesh
  Path that has same start and end nodes.
- Essential Mesh
  Loop that does not include another loop.

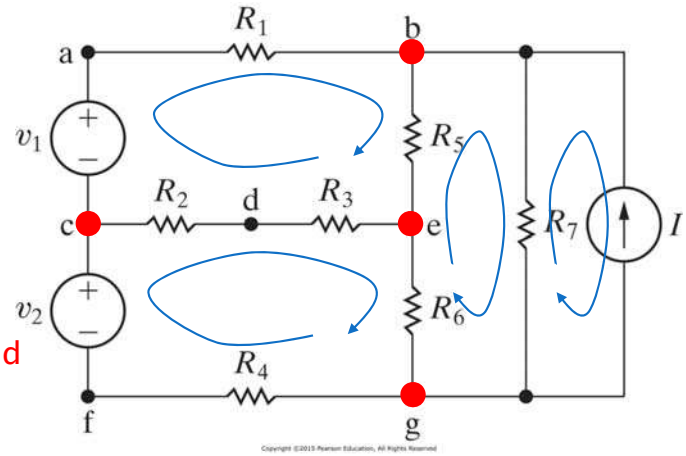

Circuit Analysis Techniques

- Node Voltage Method:
  - We use the KCL equations for the essential nodes.
  - The solution gives the voltages.

  - Node voltage method step-by-step:
    1. Define essential nodes
    2. Pick a reference node
    3. Give voltage names to essential nodes
    4. Solve KCL equations for each essential node except the reference
    5. Check the power balance

Circuit Analysis Techniques

- Qn. 4: Solve the circuit using node voltage method.
  Step 1 – Define essential nodes

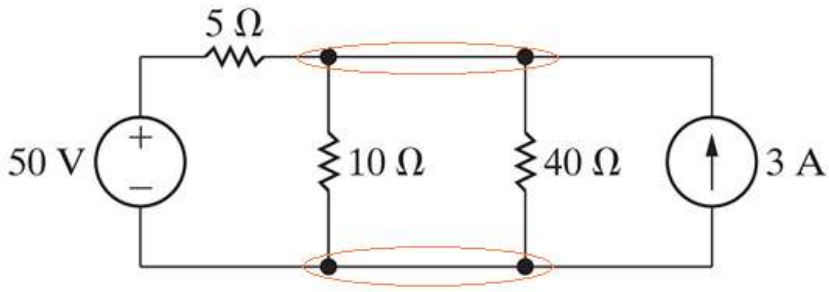

Copyright ©2015 Pearson Education, All Rights Reserved

Circuit Analysis Techniques

- Qn. 4 (cont.):
  Step 2 – Pick a refence node

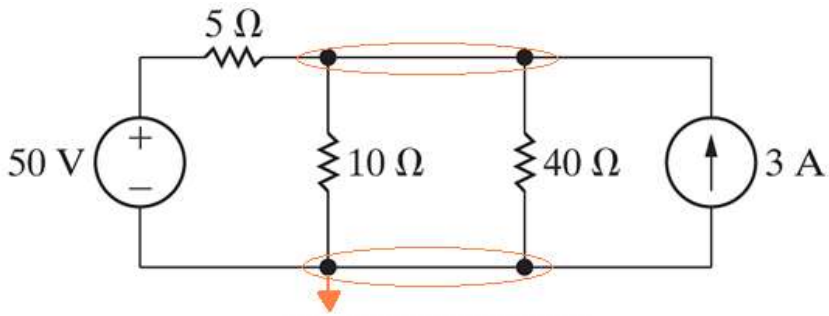

Copyright ©2015 Pearson Education, All Rights Reserved

Circuit Analysis Techniques

- Qn. 4 (cont.):
  Step 3 – Give voltage names to essential nodes

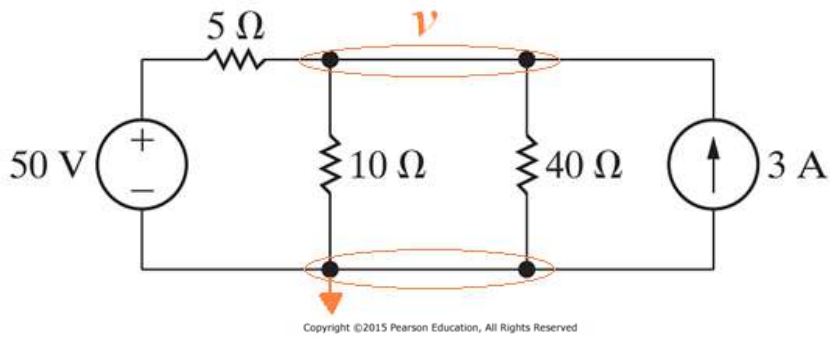

Circuit Analysis Techniques

- Qn. 4 (cont.):
  Step 4 – Solve KCL equations for each essential node except the reference

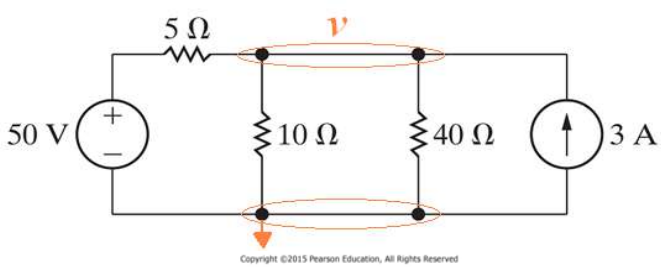

$$\frac{v-50}{5}+\frac{v-0}{10}+\frac{v-0}{40}-3=0$$

$$v=520/13=40V$$

Circuit Analysis Techniques

- Qn. 4 (cont.):
  Step 5 – Check the power balance

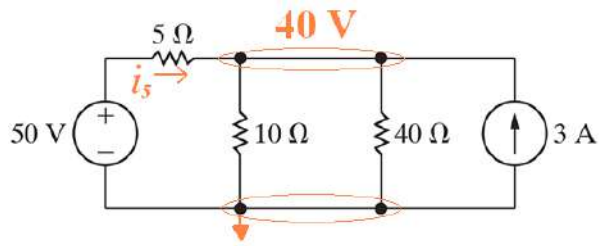

Copyright ©2015 Pearson Education, All Rights Reserved

$$i_5 = \frac{50-40}{5} = 2\text{ A}$$

$$p_5 = 5(2)^2 = 20\text{ W}$$

$$p_{50} = -(50)(2) = -100\text{ W}$$

$$p_{10} = (40)^2/10 = 160\text{ W}$$

$$p_{40} = (40)^2/40 = 40\text{ W}$$

$$p_3 = -(40)(3) = -120\text{ W}$$

$$\boxed{\sum p = -100 + 20 + 160 + 40 - 120 = 0}$$

Circuit Analysis Techniques

- Qn. 5:
  Find the given voltages and current.

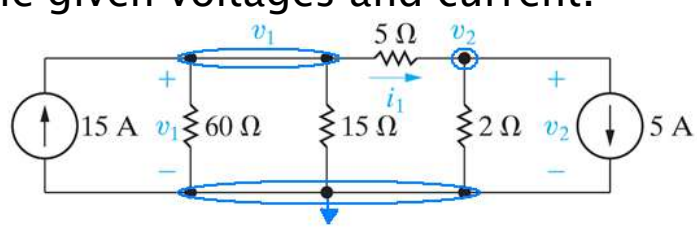

Copyright ©2015 Pearson Education, All Rights Reserved

$$v_1:\ -15 + \frac{v_1}{60} + \frac{v_1}{15} + \frac{v_1 - v_2}{5} = 0$$

$$v_2:\ \frac{v_2 - v_1}{5} + \frac{v_2}{2} + 5 = 0$$

$$\text{Standard form}: v_1\left(\frac{1}{60} + \frac{1}{15} + \frac{1}{5}\right) + v_2\left(-\frac{1}{5}\right) = 15$$

$$v_1\left(-\frac{1}{5}\right) + v_2\left(\frac{1}{5} + \frac{1}{2}\right) = -5$$

$$\text{Solution}:\ v_1 = 60\text{ V};\ \ v_2 = 10\text{ V}$$

Circuit Analysis Techniques

- Qn. 5 (cont.):
  Find the given voltages and current.

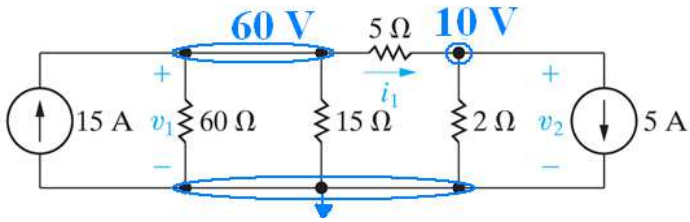

Copyright ©2015 Pearson Education, All Rights Reserved

$$p_{15A} = -(15)(60) = -900 \text{ W}; \quad p_{60} = {60^2}/{60} = 60 \text{ W};$$

$$p_{15\Omega} = {60^2}/{15} = 240 \text{ W}; \quad p_5 = {(60-10)^2}/{5} = 500 \text{ W};$$

$$p_2 = {10^2}/{2} = 50 \text{ W}; \quad p_{5A} = (5)(10) = 50 \text{ W}$$

$$\sum p = -900 + 60 + 240 + 500 + 50 + 50 = 0$$

Circuit Analysis Techniques

- Qn. 6:
  Find the power of current source.

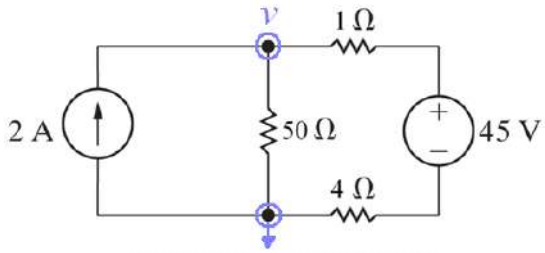

Copyright ©2015 Pearson Education, All Rights Reserved

$$\text{KCL } v: \; -2 + \frac{v}{50} + \frac{v-45}{1+4} = 0$$

$$\text{Standard form}: \; v\left(\frac{1}{50} + \frac{1}{5}\right) = 2 + \frac{45}{5}$$

$$\text{Solution}: v = \frac{550}{11} = 50 \text{ V}$$

Circuit Analysis Techniques

- Supernode:
  When a voltage source is between two essential nodes, we can combine those nodes to form a supernode.

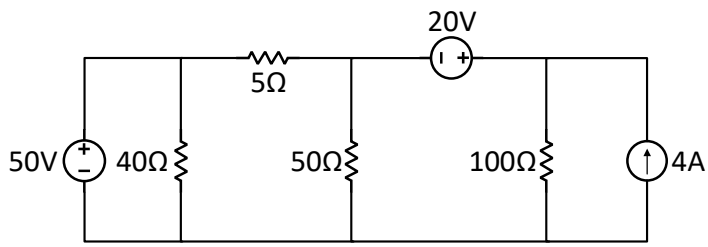

Step 6: Short circuit the voltage source temporarily to create a Supernode.

Circuit Analysis Techniques

- Qn. 7: Solve the circuit using node voltage method.
  Step 6 – Create supernode

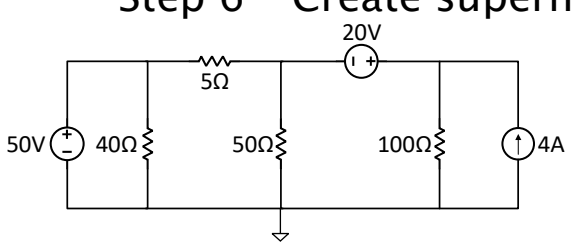

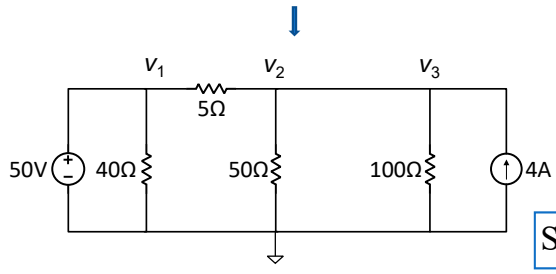

v_1 : $v_1 = 50$

supernode : $\dfrac{v_2 - 50}{5} + \dfrac{v_2}{50} + \dfrac{v_3}{100} - 4 = 0$

SN cons. : $v_3 - v_2 = 20$

$$v_2\left(\frac{1}{5} + \frac{1}{50}\right) + v_3\left(\frac{1}{100}\right) = 14$$

$$v_2(-1) + v_3(1) = 20$$

$$\boxed{\text{Solution}: v_1 = 50\text{ V}; \quad v_2 = 60\text{ V}; \quad v_3 = 80\text{ V};}$$

Circuit Analysis Techniques

- Qn. 7 (cont.):
  Step 5 – Check the power balance

$$i_{50V} = \frac{50}{40} + \frac{(50-60)}{5} = -0.75A$$

$$i_{20V} = \frac{80}{100} - 4 = -3.2A$$

$$v_{4A} = v_3 = 80V$$

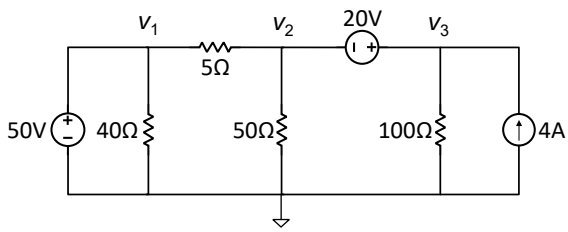

$$p_{50V} = -(50)(-0.75) = 37.5W \text{ W}$$

$$p_{20V} = -(20)(-3.2) = 64 \text{ W}$$

$$p_{4A} = -(80)(4) = -320 \text{ W}$$

$$p_{40} = (50)^2/(40) = 62.5 \text{ W}$$

$$p_5 = (60-50)^2/(5) = 20 \text{ W}$$

$$p_{50} = (60)^2/(50) = 72 \text{ W}$$

$$p_{100} = (80)^2/(100) = 64 \text{ W}$$

$$\boxed{\sum p = 0}$$

Circuit Analysis Techniques

- Qn. 8: Solve the circuit using node voltage method.

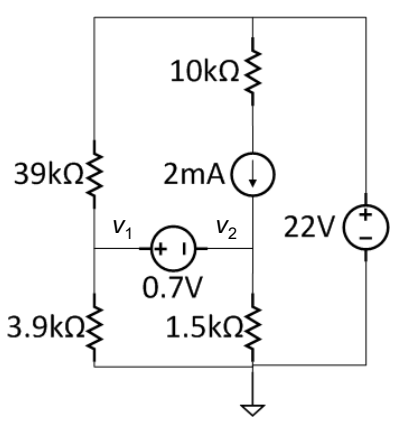

$$\text{supernode} : \frac{v_1}{3.9k} + \frac{v_1 - 22}{39k} + \frac{v_2}{1.5k} - 2\times10^{-3} = 0$$

$$\text{SN const.} : v_1 - v_2 = 0.7$$

$$v_1\left(\frac{1}{3.9k} + \frac{1}{39k}\right) + v_2\left(\frac{1}{1.5k}\right) = 22 + 2\times10^{-3}$$

$$v_1(1) + v_2(-1) = 0.7$$

$$\boxed{\text{Solution} : v_1 = 3.1946 \text{ V}; \quad v_2 = 2.4946 \text{ V};}$$

Circuit Analysis Techniques

- Qn. 8 (cont.):
  Step 5 – Check the power balance

$$i_{0.7V} = \frac{2.4946}{1.5\text{k}} - 2mA = -0.33693mA$$

$$i_{22V} = \frac{3.1946-22}{39\text{k}} - 2mA = -2.5mA$$

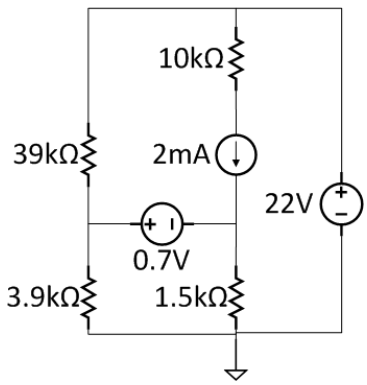

$$p_{22V} = +(22)(-2.5\times10^{-3}) = -54.6m\text{W}$$

$$p_{0.7V} = +(0.7)(0.33693\times10^{-3}) = -0.23585m\text{W}$$

$$p_{2mA} = (2-2.4946)(2\times10^{-3}) = -0.9892m\text{W}$$

$$p_{39} = (22-3.1946)^2/(39k) = 9.068m\text{W}$$

$$p_{3.9} = (3.1946)^2/(3.9k) = 2.617m\text{W}$$

$$p_{10} = (10k)(2\times10^{-3})^2 = 40m\text{W}$$

$$p_{1.5} = (2.4946)^2/(1.5k) = 4.14m\text{W}$$

$$\boxed{\sum p = 0}$$

Circuit Analysis Techniques

- Mesh Current Method:
  - We use the KVL equations for the essential meshes.
  - The solution gives the currents.

  - Node voltage method step-by-step :
    1. Define essential meshes
    2. Define currents to all essential meshes (with directions)
    3. Solve KVL equations for each essential mesh
    4. Check the power balance

Circuit Analysis Techniques

- Qn. 9: Solve the circuit using mesh current method.
  Step 1 – Define essential meshes
  Step 2 – Define currents to all essential meshes (with directions)

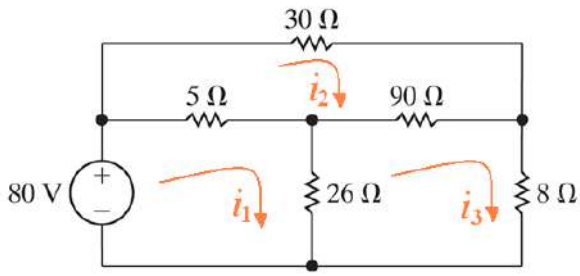

Copyright ©2015 Pearson Education, All Rights Reserved

Circuit Analysis Techniques

- Qn. 9 (cont.):
  Step 3 – Solve KVL equations for each essential mesh

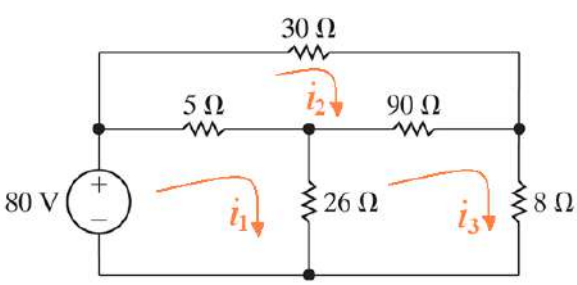

Copyright ©2015 Pearson Education, All Rights Reserved

$$i_1 : -80 + 5(i_1 - i_2) + 26(i_1 - i_3) = 0$$
$$i_2 : 30(i_2) + 90(i_2 - i_3) + 5(i_2 - i_1) = 0$$
$$i_3 : 8(i_3) + 26(i_3 - i_1) + 90(i_3 - i_2) = 0$$

$$i_1(5+26) + i_2(-5) + i_3(-26) = 80$$
$$i_1(-5) + i_2(30+90+5) + i_3(-90) = 0$$
$$i_1(-26) + i_2(-90) + i_3(8+26+90) = 0$$

$$\boxed{\text{Solution}: \; i_1 = 5\text{ A}; \;\; i_2 = 2\text{ A}; \;\; i_3 = 2.5\text{ A}}$$

Circuit Analysis Techniques

- Qn. 9 (cont.):
  Step 4 – Check the power balance

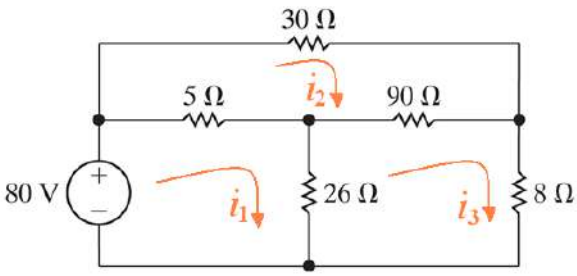

Copyright ©2015 Pearson Education, All Rights Reserved

$$p_{80V} = -(80)(5) = -400 \text{ W}$$
$$p_5 = (5)(5-2)^2 = 45 \text{ W}$$
$$p_{30} = (30)(2)^2 = 120 \text{ W}$$
$$p_{90} = (90)(2.5-2)^2 = 22.5 \text{ W}$$
$$p_{26} = (26)(5-2.5)^2 = 162.5 \text{ W}$$
$$p_8 = (8)(2.5)^2 = 50 \text{ W}$$

$$\boxed{\sum p = -400 + 45 + 120 + 22.5 + 162.5 + 50 = 0}$$

Circuit Analysis Techniques

- Qn. 10: Solve the circuit using mesh current method.

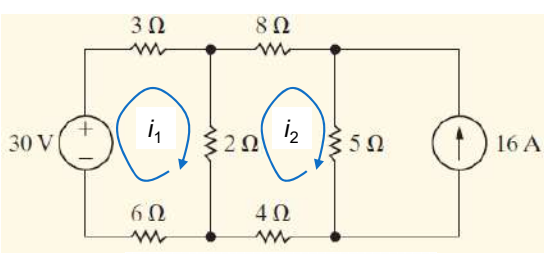

Copyright ©2015 Pearson Education, All Rights Reserved

$$i_1 : -30 + 3(i_1) + 2(i_1 - i_2) + 6(i_1) = 0$$
$$i_2 : 4(i_2) - 2(i_1 - i_2) + 8(i_2) + 5(i_2 + 16) = 0$$

$$i_1(3+2+6) + i_2(-2) = 30$$
$$i_1(-2) + i_2(4+2+8+5) = -80$$

$$\boxed{\text{Solution}: \ i_1 = 2 \text{ A}; \quad i_2 = -4 \text{ A};}$$

Circuit Analysis Techniques

- Qn. 10 (cont.):

$$\boxed{v_{16A} = 5(16 + (-4)) = 60V}$$

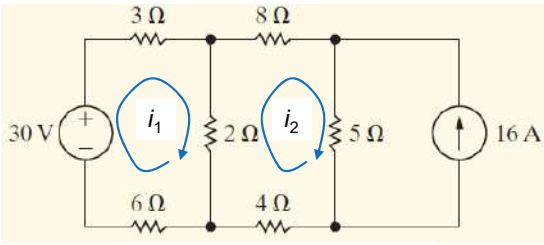

Copyright ©2015 Pearson Education, All Rights Reserved

$$p_{30V} = -(30)(2) = -60 \text{ W}$$
$$p_{2A} = -(60)(16) = -960 \text{ W}$$
$$p_3 = (3)(2)^2 = 12 \text{ W}$$
$$p_6 = (6)(2)^2 = 24 \text{ W}$$
$$p_2 = (2)(2 + (-4))^2 = 72 \text{ W}$$
$$p_8 = (8)(-4)^2 = 128 \text{ W}$$
$$p_4 = (4)(-4)^2 = 64 \text{ W}$$
$$p_5 = (5)(16 + (-4))^2 = 720 \text{ W}$$

$$\boxed{\sum p = 0}$$

Circuit Analysis Techniques

- Supermesh:

  When a current source is shared by two essential meshes, we can combine those meshes to form a supermesh.

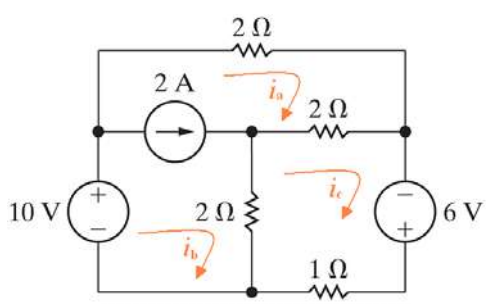

Copyright ©2015 Pearson Education, All Rights Reserved

Step 5: Create a supermesh by temporarily removing the branch with current source.

Circuit Analysis Techniques

- Qn. 11: Solve the circuit by using mesh current method.
  Step 5 – Create supermesh

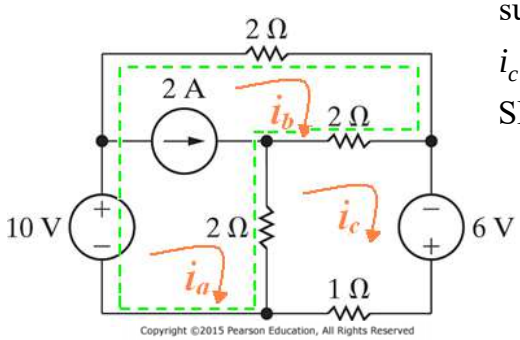

$$\text{supermesh}: -10 + 2i_b + 2(i_b - i_c) + 2(i_a - i_c) = 0$$
$$i_c \quad : -6 + 1i_c + 2(i_c - i_a) + 2(i_c - i_b) = 0$$
$$\text{SM const.}: 2 = i_a - i_b$$

$$i_a(2) + i_b(2+2) + i_c(-2-2) = 10$$
$$i_a(-2) + i_b(-2) + i_c(1+2+2) = 6$$
$$i_a(1) + i_b(-1) + i_c(0) = 2$$

$$\boxed{\text{Solution}: i_a = 7\text{ A}; \quad i_b = 5\text{ A}; \quad i_c = 6\text{ A};}$$

Circuit Analysis Techniques

- Qn. 11 (cont.):
  Step 4 – Check the power balance

$$v_{2A} = 10 - (7-6)2 = 8V$$

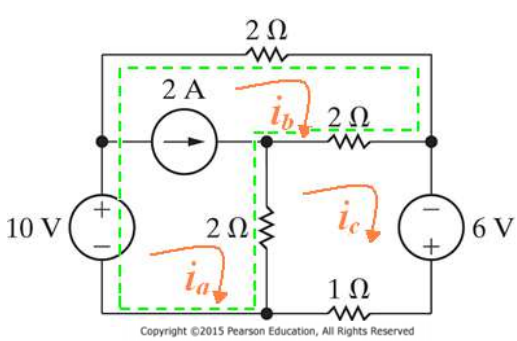

$$p_{10V} = -(10)(7) = -70\text{ W}$$
$$p_{6V} = -(6)(6) = -36\text{ W}$$
$$p_{2A} = (8)(2) = 16\text{ W}$$
$$p_{2\Omega üst} = (2)(5)^2 = 50\text{ W}$$
$$p_{2\Omega orta} = (2)(6-5)^2 = 2\text{ W}$$
$$p_{2\Omega alt} = (2)(7-6)^2 = 2\text{ W}$$
$$p_1 = (1)(6)^2 = 36\text{ W}$$

$$\boxed{\sum p = -70 - 36 + 16 + 50 + 2 + 2 + 36 = 0}$$

Circuit Analysis Techniques

- Qn. 12: Solve the circuit using mesh current method.

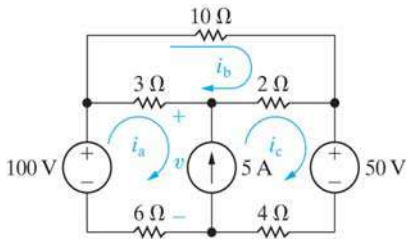

$$\text{supermesh}: -100 + 3(i_a - i_b) + 2(i_c - i_b) + 50 + 4i_c + 6i_a = 0$$
$$i_b \quad : 10i_b - 2(i_c - i_b) - 3(i_a - i_b) = 0$$
$$\text{SM const.}: 5 = i_c - i_a$$

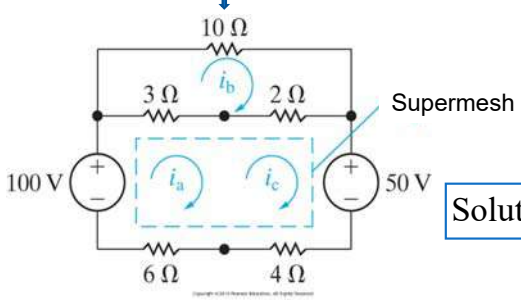

$$i_a(3+6) + i_b(-3-2) + i_c(2+4) = 50$$
$$i_a(-3) + i_b(10+2+3) + i_c(-2) = 0$$
$$i_a(-1) + i_b(0) + i_c(1) = 5$$

$$\boxed{\text{Solution}: i_a = 1.75\text{ A}; \quad i_b = 1.25\text{ A}; \quad i_c = 6.75\text{ A};}$$

Circuit Analysis Techniques

- Qn. 12 (cont.):
  Step 4 – Check the power balance

$$v_{5A} = 100 - (6)(1.75) - (3)(1.75 - 1.25) = 88V$$

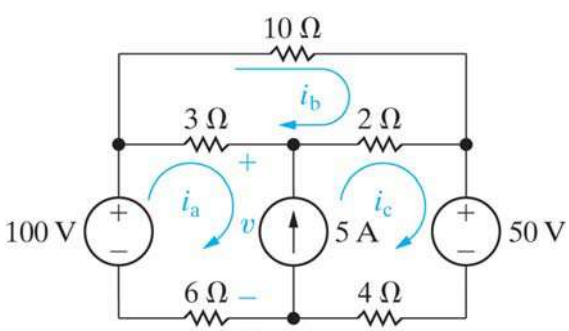

$$p_{100V} = -(100)(1.75) = -175\text{ W}$$
$$p_{50V} = +(50)(6.75) = 337.5\text{ W}$$
$$p_{5A} = -(88)(5) = -440\text{ W}$$
$$p_{10} = (10)(1.25)^2 = 15.625\text{ W}$$
$$p_3 = (3)(1.75 - 1.25)^2 = 0.75\text{ W}$$
$$p_2 = (2)(6.75 - 1.25)^2 = 60.5\text{ W}$$
$$p_6 = (6)(1.75)^2 = 18.375\text{ W}$$
$$p_4 = (4)(6.75)^2 = 182.25\text{ W}$$

$$\boxed{\sum p = 0}$$

Course Content

- ~~Circuit Components and Variables, Ohm's Law and Kirchoff's Laws~~
- ~~Circuit Analysis Techniques I - Node Voltage & Mesh Current Methods~~
- Circuit Analysis Techniques II - Thevenin and Norton Equivalent Circuits
- First Order RL and RC Circuits
- Phasor Concept and AC Analysis of Circuits
- Midterm
- Introduction to Semiconductors
- Diode Applications
- BJT Analysis
- FET Analysis
- Operational Amplifier
- Midterm
- Logic Gates
- Make-up Exams

Questions

- Qn. 13: a) d'Arsonval amperemeter can read max 5A of current. What is R_A.
  b) d'Arsonval voltmeter can read max 5V of voltage. What is R_v.

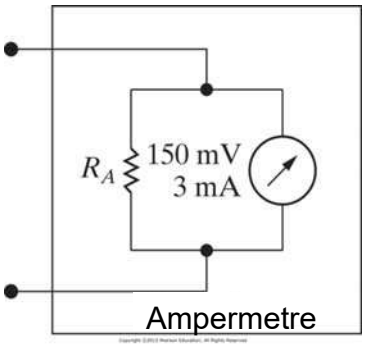

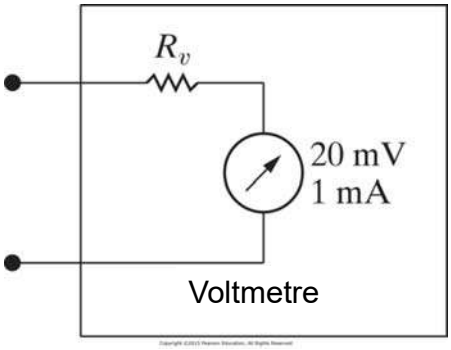

Questions

- Qn. 14: Find the given currents by using the mesh current method.

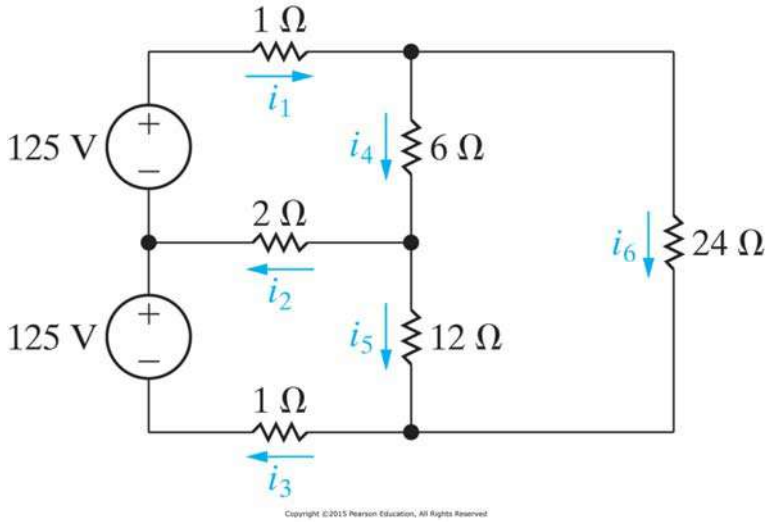

Questions

- Qn. 15: Find voltages of each node by using the node voltage method.

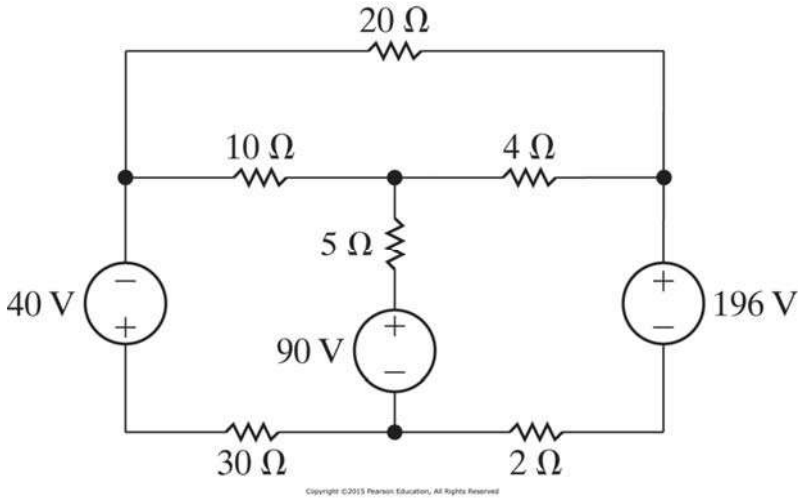

ELE 296 Basic Electric Circuits and Electronics

- Circuit Analysis Techniques II
  - Source Transformation
  - Thévenin Equivalent Circuit
  - Norton Equivalent Circuit
  - Maximum Power Transfer

Circuit Analysis Techniques

- Source Transformation:

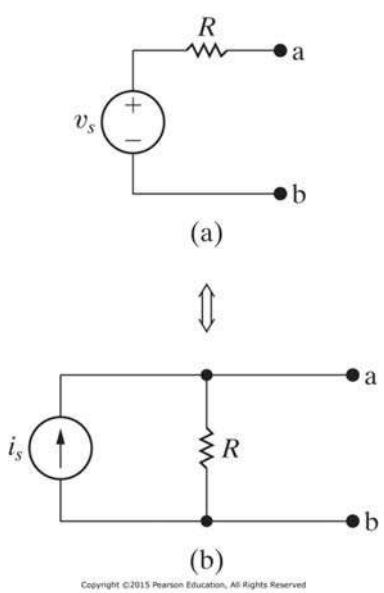

Copyright ©2015 Pearson Education, All Rights Reserved

The two circuits given can be equivalent in terms of the branch currents and output voltages.

Sometimes it is easier to analyze when a source transformation is realized. When can we say that these two circuits are equivalent.

In order to be equivalent the branch currents and the output voltages should be equal!!!

Circuit Analysis Techniques

- Source Transformation (cont.):

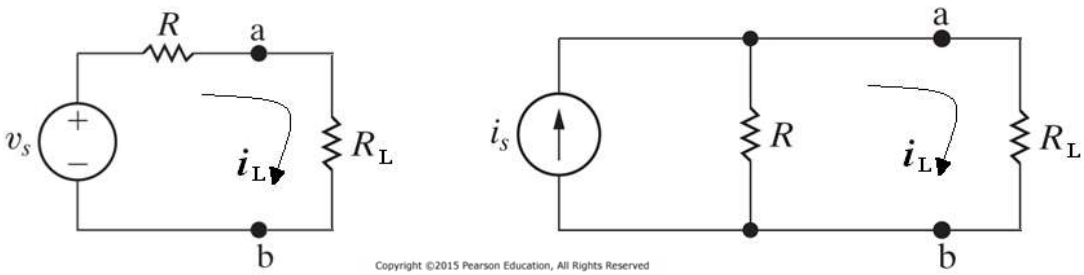

$$i_L = \frac{v_S}{R + R_L}$$

$$i_L = \frac{R}{R + R_L} i_S$$

Circuit Analysis Techniques

- Source Transformation (cont.):

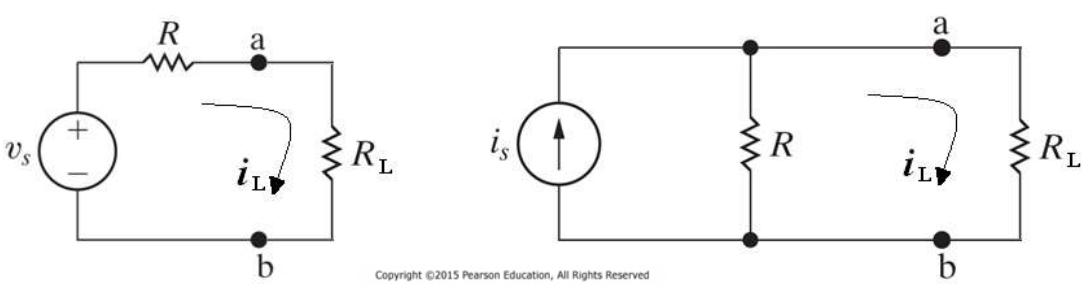

$$i_L = \frac{v_S}{R + R_L}$$

$$i_L = \frac{R}{R + R_L} i_S$$

$$i_L = \frac{v_S}{R + R_L} = \frac{R}{R + R_L} i_S$$

Circuit Analysis Techniques

- Source Transformation (cont.):

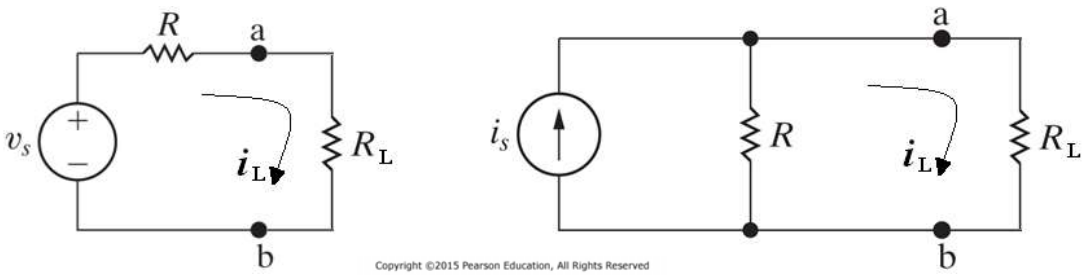

$$i_L = \frac{v_S}{R + R_L} \qquad i_L = \frac{R}{R + R_L} i_S$$

$$i_L = \frac{v_S}{R + R_L} = \frac{R}{R + R_L} i_S$$

$$\boxed{i_S = \frac{v_S}{R}}$$

Circuit Analysis Techniques

- Qn. 1: Use source transformation to find the power of 6V voltage source.

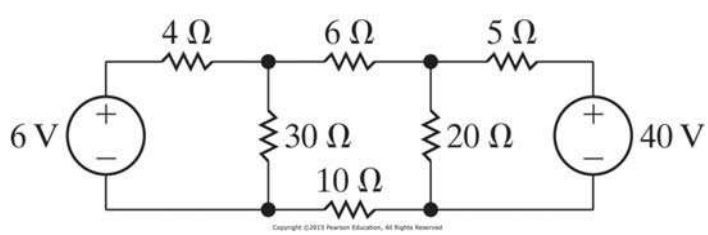

Circuit Analysis Techniques

- Qn. 1 (cont.): Use source transformation to find the power of 6V voltage source.

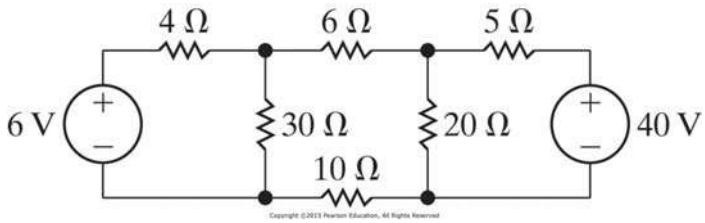

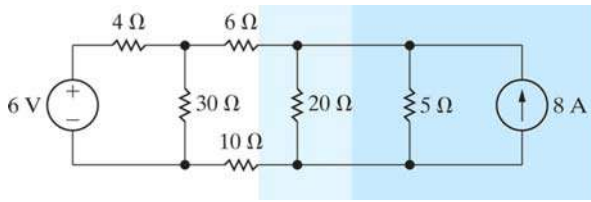

Copyright ©2015 Pearson Education, All Rights Reserved

Circuit Analysis Techniques

- Qn. 1 (cont.): Use source transformation to find the power of 6V voltage source.

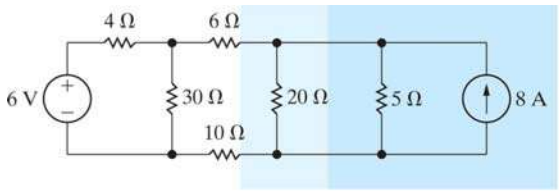

(a) İlk Adım

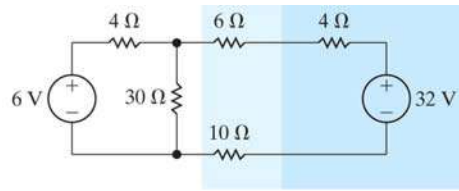

(b) İkinci Adım

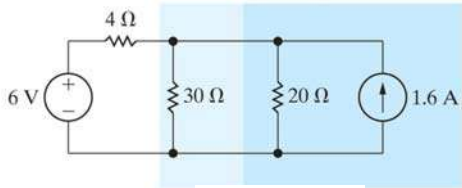

(c) Üçüncü Adım

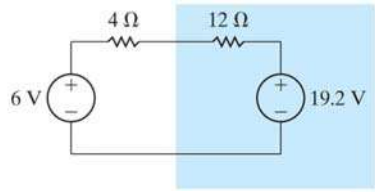

(d) Dördüncü Adım

Copyright ©2015 Pearson Education, All Rights Reserved

Circuit Analysis Techniques

- Qn. 1 (cont.): Use source transformation to find the power of 6V voltage source.

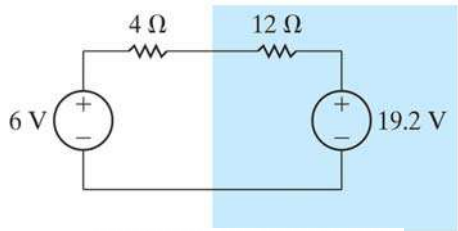

Copyright ©2015 Pearson Education, All Rights Reserved

$$i = \frac{19.2V - 6V}{16\Omega} = 0.825A$$

$$P_{6V} = +(6)(0.825) = 4.95W$$

Circuit Analysis Techniques

- Qn. 2: Use source transformation to find the voltage v.

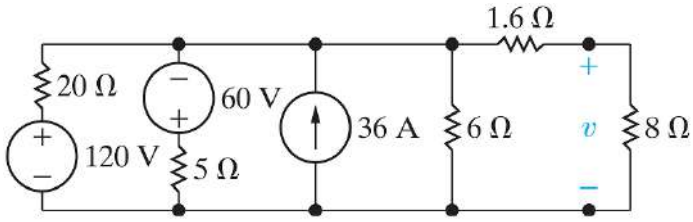

Copyright ©2015 Pearson Education, All Rights Reserved

Circuit Analysis Techniques

- Qn. 2 (cont.): Use source transformation to find the voltage v.

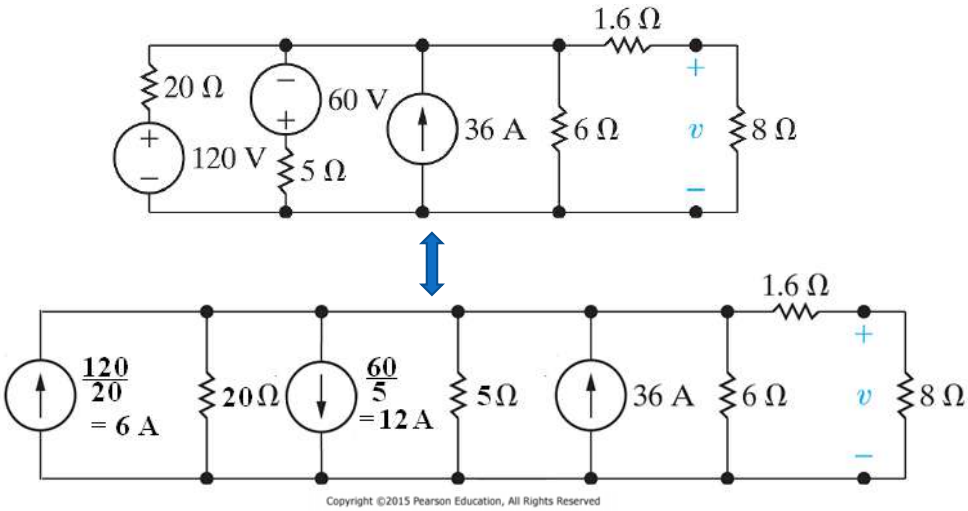

Copyright ©2015 Pearson Education, All Rights Reserved

Circuit Analysis Techniques

- Qn. 2 (cont.): Use source transformation to find the voltage v.

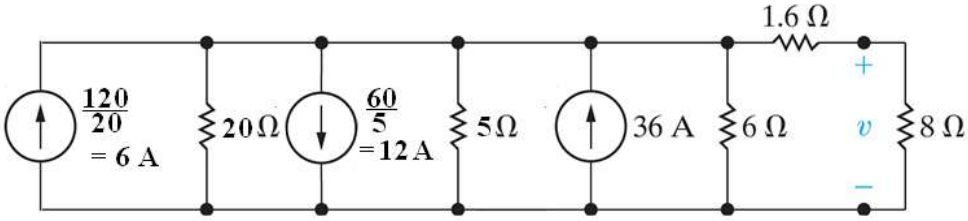

Copyright ©2015 Pearson Education, All Rights Reserved

Circuit Analysis Techniques

- Qn. 2 (cont.): Use source transformation to find the voltage v.

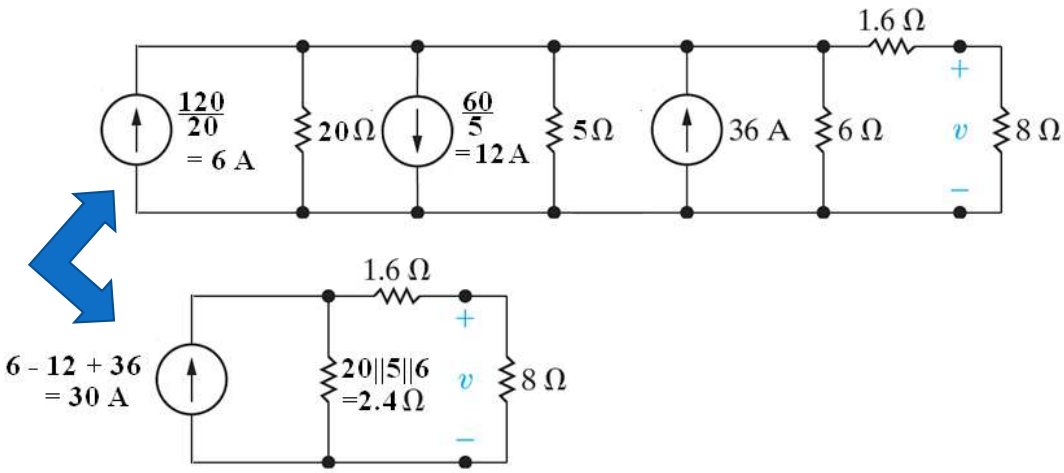

Copyright ©2015 Pearson Education, All Rights Reserved

Circuit Analysis Techniques

- Qn. 2 (cont.): Use source transformation to find the voltage v.

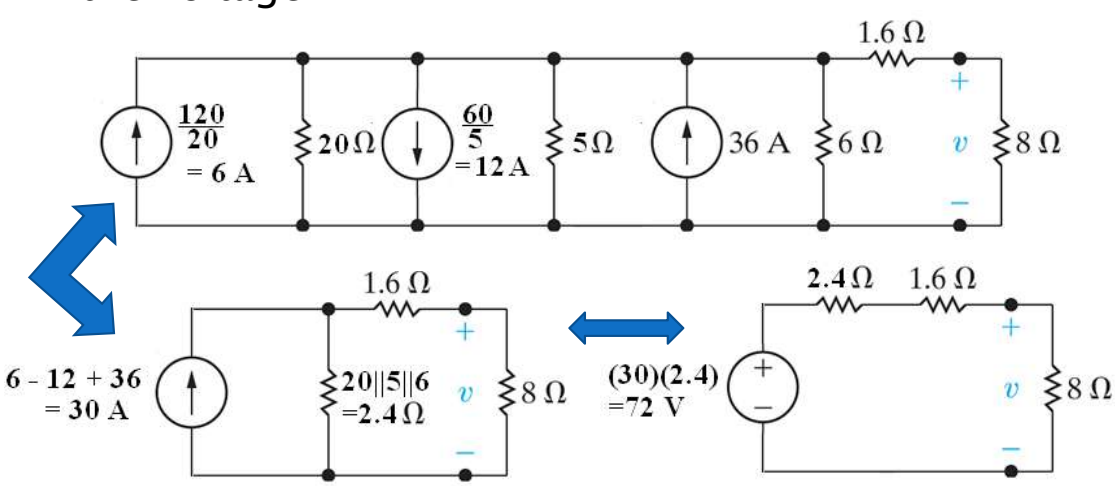

Copyright ©2015 Pearson Education, All Rights Reserved

$$v = \frac{8}{2.4+1.6+8}(72) = 48\text{ V}$$

Circuit Analysis Techniques

- Source Transformation (cont.):

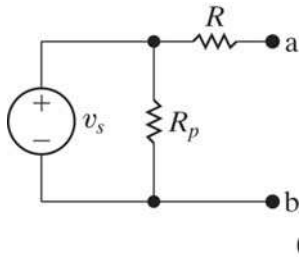

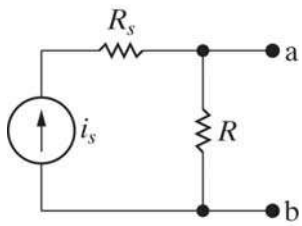

Copyright ©2015 Pearson Education, All Rights Reserved

What happens if there is a parallel or a serial resistor to the voltage or current source, respectively.

Since these resistors do not change the current or voltage on the terminals ab, you can remove them from the circuit and perform the analysis without them.

Circuit Analysis Techniques

- Source Transformation (cont.):

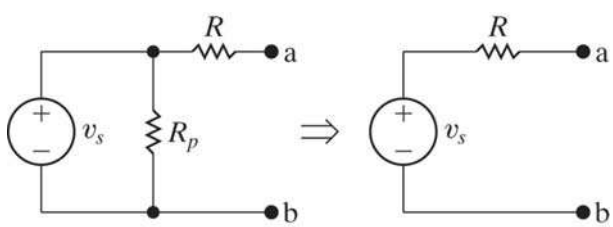

(a)

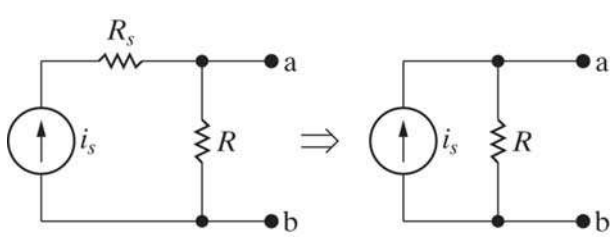

(b)

Copyright ©2015 Pearson Education, All Rights Reserved

Circuit Analysis Techniques

- Qn. 3: Use source transformation to find the voltage v_0.

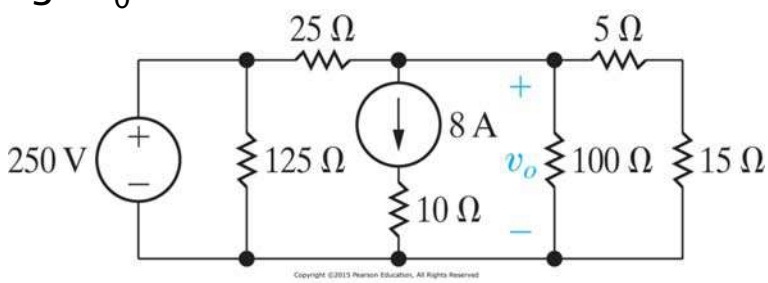

Circuit Analysis Techniques

- Qn. 3 (cont.): Use source transformation to find the voltage v_0.

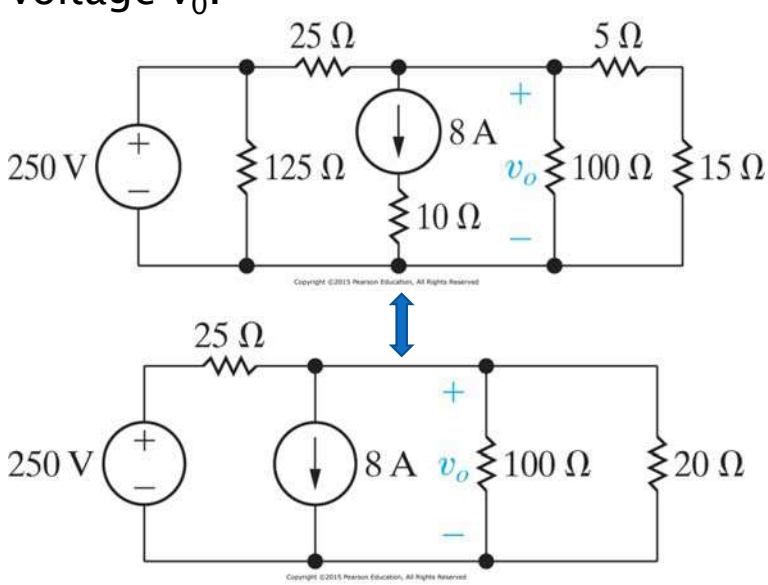

Circuit Analysis Techniques

- Qn. 3 (cont.): Use source transformation to find the voltage v_0.

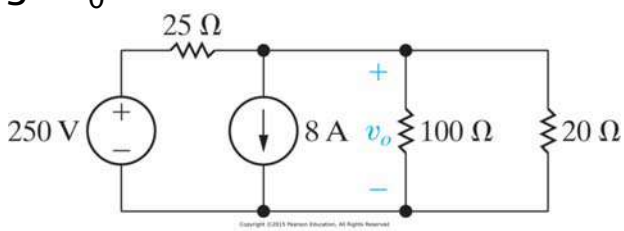

Circuit Analysis Techniques

- Qn. 3 (cont.): Use source transformation to find the voltage v_0.

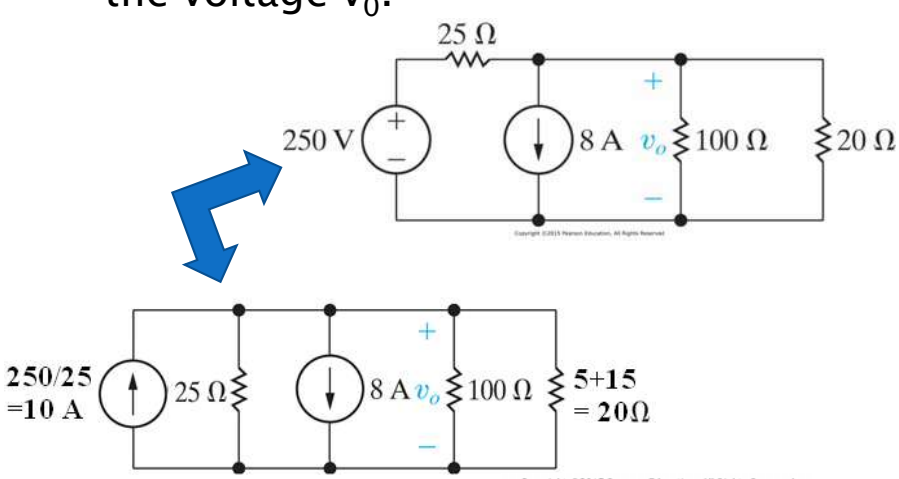

Copyright ©2015 Pearson Education, All Rights Reserved

Circuit Analysis Techniques

- Qn. 3 (cont.): Use source transformation to find the voltage v_0.

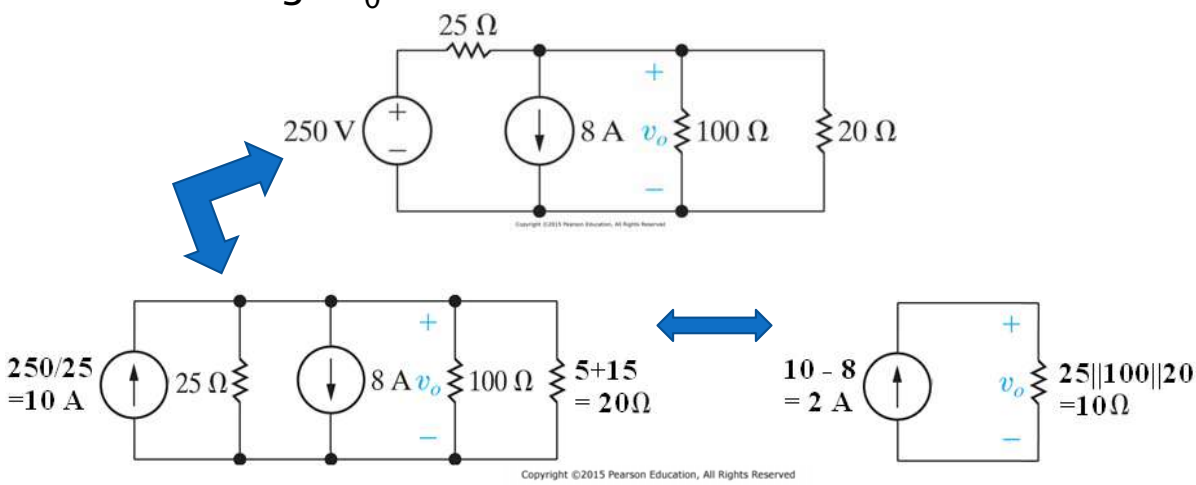

$$v_o = (2)(10) = 20\text{ V}$$

Circuit Analysis Techniques

- Source Transformation (cont.):
  - Keep in mind that source transformation can not be directly applied to every circuit. Use this method if you are sure that source transformation is applicable

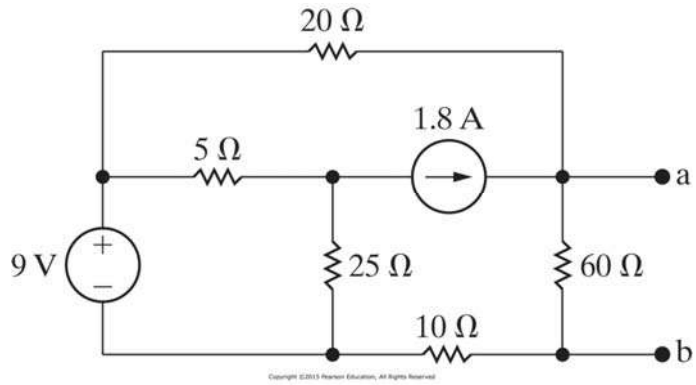

Circuit Analysis Techniques

- Thévenin and Norton Equivalent Circuits:
  - Sometimes we deal with only the voltage and current of the output terminals of a complex circuit.
  - For example, when we plug in a charger, we are interested in the voltage and current at the terminals of the charger.
  - Thévenin and Norton equivalent techniques help us define the needed terminal behaviors of output terminals.
  - These circuits may be used to represent any circuit made up of linear elements.

Circuit Analysis Techniques

- Thévenin Equivalent Circuit:

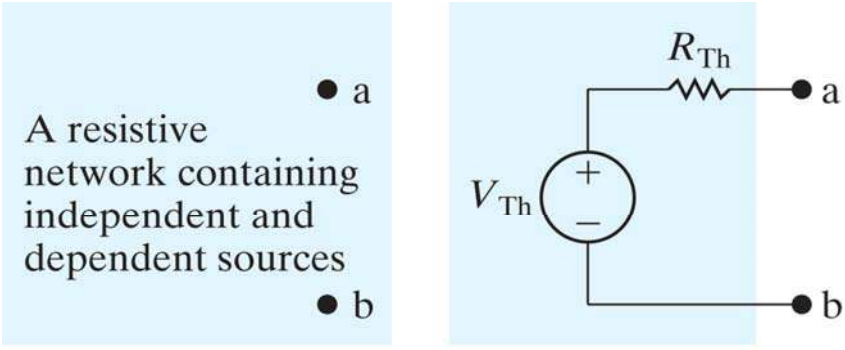

(a) (b)

Copyright ©2015 Pearson Education, All Rights Reserved

- Step 1: find open circuit voltage ($V_{oc}=V_{th}$).
- Step 2: Find short circuit current (I_{sc}).
- Step 3: $R_{th} = V_{th} / I_{sc}$

Circuit Analysis Techniques

- Qn. 4: Find Thévenin equivalent with respect to (w.r.t.) terminals ab.

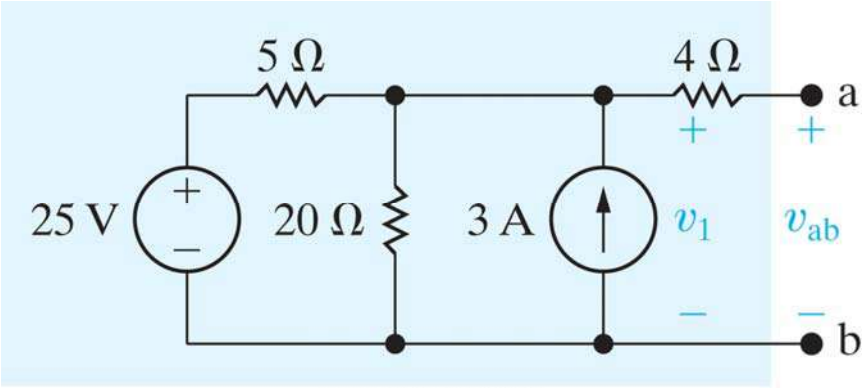

Copyright ©2015 Pearson Education, All Rights Reserved

Circuit Analysis Techniques

- Qn. 4 (cont.): Step 1: Find open circuit voltage ($V_{oc}=V_{th}$).

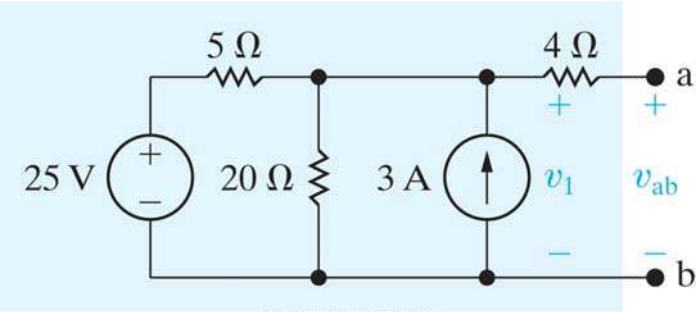

Copyright ©2015 Pearson Education, All Rights Reserved

$$\frac{V_1 - 25}{5} + \frac{V_1}{20} - 3 = 0 \qquad \Rightarrow V_1 = V_{th} = 32V$$

Circuit Analysis Techniques

- Qn. 4 (cont.) : Step 2: Find short circuit current (I_{sc}).

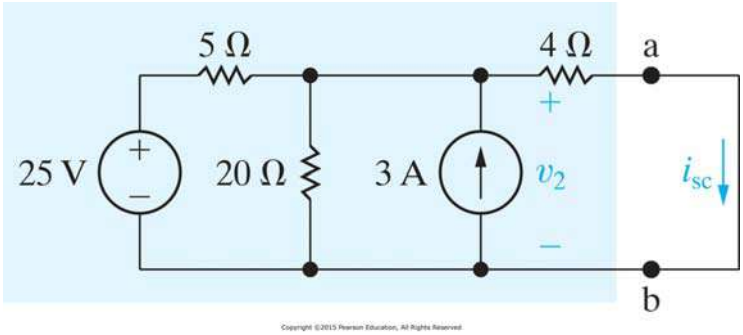

$$\frac{V_2 - 25}{5} + \frac{V_2}{20} - 3 + \frac{V_2}{4} = 0 \qquad \Rightarrow V_2 = 16V \qquad \Rightarrow I_{sc} = \frac{16V}{4\Omega} = 4A$$

Circuit Analysis Techniques

- Qn. 4 (cont.): Step 3: $R_{th} = V_{th} / I_{sc}$

$$R_{th} = \frac{32V}{4A} = 8\Omega$$

Circuit Analysis Techniques

- Qn. 4 (cont.): Step 3: $R_{th} = V_{th} / I_{sc}$

$$R_{th} = \frac{32V}{4A} = 8\Omega$$

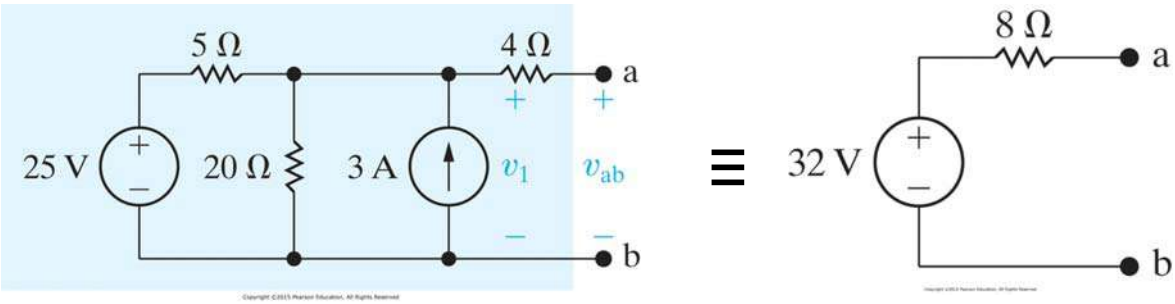

Circuit Analysis Techniques

- Qn 5: Find Thévenin equivalent w.r.t. terminals ab.

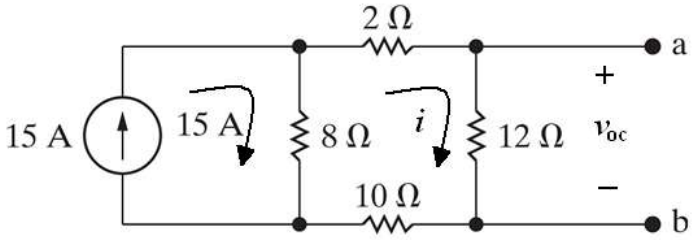

Copyright ©2015 Pearson Education, All Rights Reserved

$$12i + 10i + 8(i - 15) + 2i = 0$$
$$\Rightarrow i = 3.75A$$

$$\Rightarrow V_{oc} = V_{th} = 12i = 45V$$

Circuit Analysis Techniques

- Qn 5 (cont.): Find Thévenin equivalent w.r.t. terminals ab.

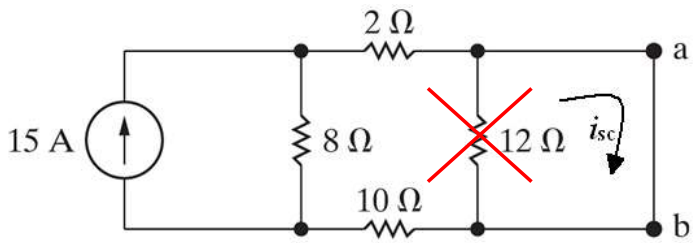

Copyright ©2015 Pearson Education, All Rights Reserved

$$i_{sc} = \frac{8}{20}15 = 6A$$

Copyright ©2015 Pearson Education, All Rights Reserved

Circuit Analysis Techniques

- Qn 5 (cont.): Find Thévenin equivalent w.r.t. terminals ab.

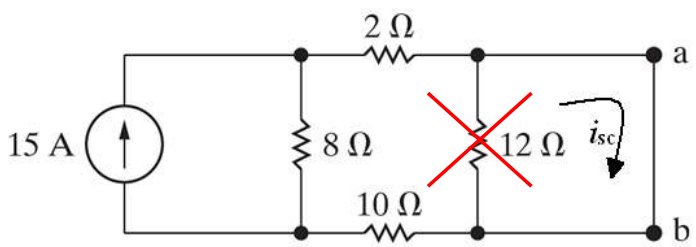

Copyright ©2015 Pearson Education, All Rights Reserved

$$i_{sc} = \frac{8}{20}15 = 6A$$

$$R_{th} = \frac{45V}{6A} = 7.5\Omega$$

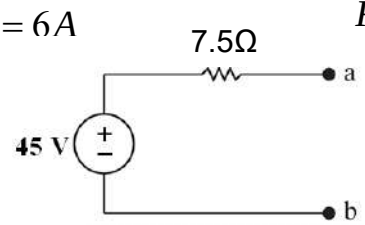

Copyright ©2015 Pearson Education, All Rights Reserved

Circuit Analysis Techniques

- Thévenin Equivalent Circuit (cont.):
  - Alternative Method for Step 3: Kill the independent sources and calculate R_{th} directly.
  - Voltage source is replaced with short circuit.
  - Current source is replaced with open circuit.

Circuit Analysis Techniques

- Qn 6: Find Thévenin equivalent w.r.t. terminals ab.

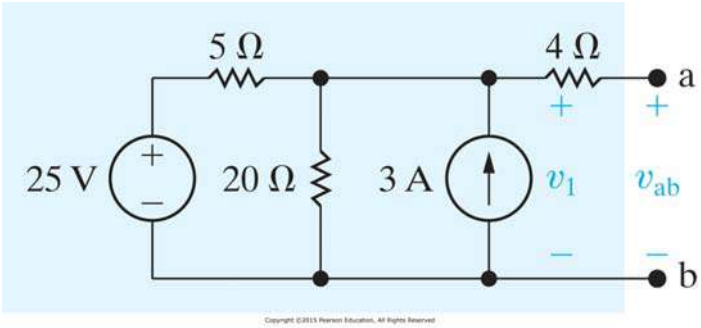

$$\frac{V_1 - 25}{5} + \frac{V_1}{20} - 3 = 0 \qquad \Rightarrow V_1 = V_{th} = 32V$$

Circuit Analysis Techniques

- Qn. 6 (cont.): Step 3: Find Thévenin equivalent resistance.

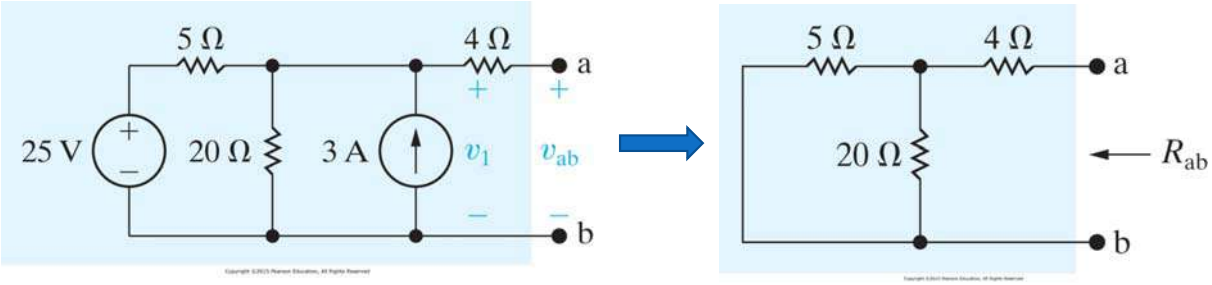

$$R_{ab} = R_{th} = 4 + (5 \| 20) = 8\Omega$$

Circuit Analysis Techniques

- Thévenin Equivalent Circuit (cont.):
  - Alternative Method for All Steps: Use source transformation to find the equivalent circuit.
  - Keep in mind that source transformation can not be directly applied to every circuit. Use this method if you are sure that source transformation is applicable.

Circuit Analysis Techniques

- Qn. 7: Find Thévenin equivalent w.r.t. terminals ab.

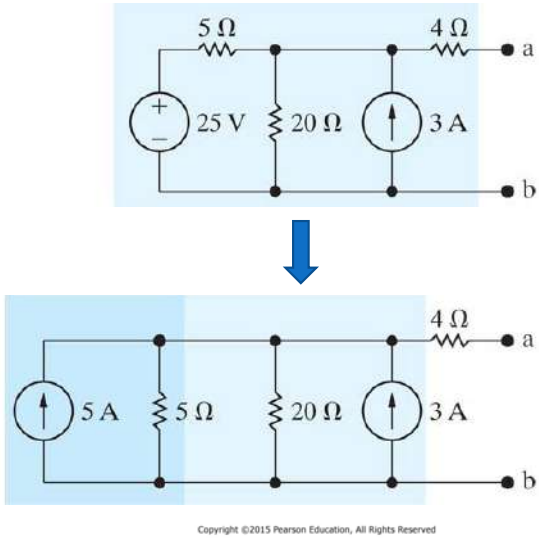

Copyright ©2015 Pearson Education, All Rights Reserved

Circuit Analysis Techniques

- Qn. 7 (cont.): Find Thévenin equivalent w.r.t. terminals ab.

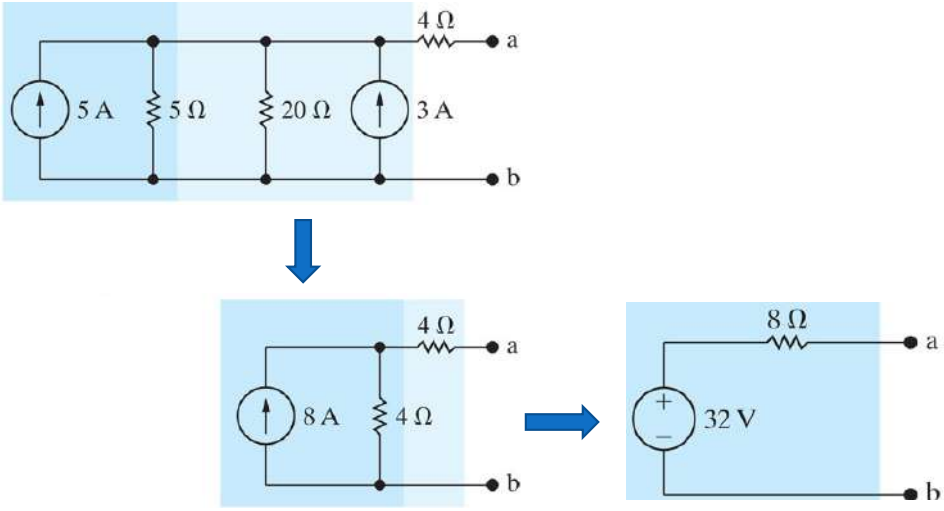

Copyright ©2015 Pearson Education, All Rights Reserved

Circuit Analysis Techniques

- Norton Equivalent Circuit:

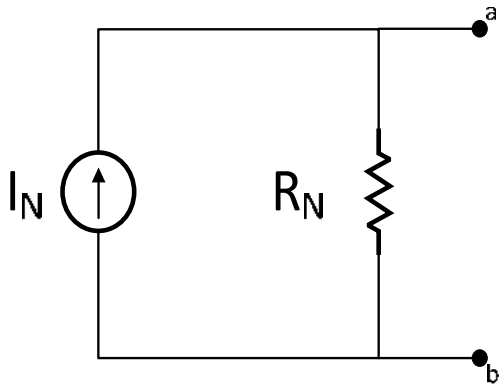

  - Step 1: Find short circuit current ($I_{sc}=I_N$).
  - Step 2: Find open circuit voltage (V_{oc}).
  - Step 3: $R_N = V_{oc} / I_N$

Circuit Analysis Techniques

- Norton Equivalent Circuit (cont.):

  - Alternative for Step 3: Kill the independent sources and calculate R_N.
  - Alternative for All Steps: Use source transformation.
  - Last Alternative: Find Thévenin equivalent circuit and apply source transformation.

Circuit Analysis Techniques

- Qn. 8: Find Thévenin equivalent w.r.t. terminals ab.

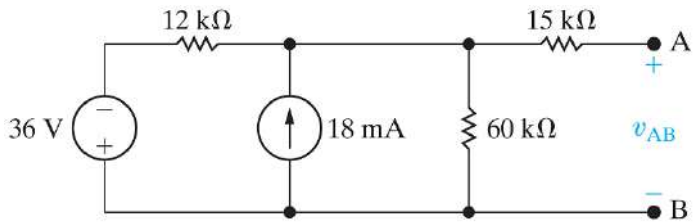

Copyright ©2015 Pearson Education, All Rights Reserved

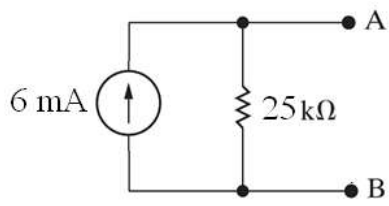

Copyright ©2015 Pearson Education, All Rights Reserved

Circuit Analysis Techniques

- Maximum Power Transfer:
  - It is important to emphasize the amount of power transferred to output terminals for some applications.
  - What should be the value of R_L for max power transfer.

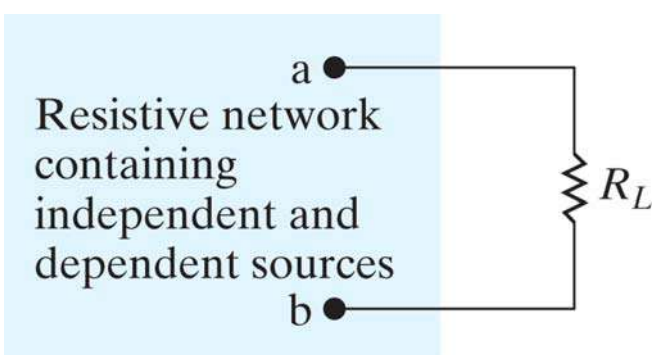

Circuit Analysis Techniques

- Maximum Power Transfer (cont.):
  - First find the Thévenin equivalent
  - Since they have the same output voltage and current, the power transferred to the load can be shown as a function of V_{Th}, R_{Th}, ve R_L.

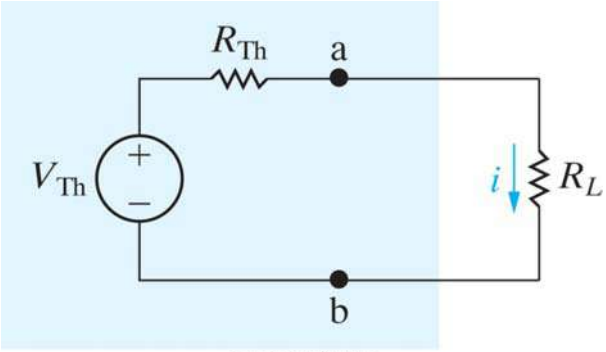

Circuit Analysis Techniques

- Maximum Power Transfer (cont.):
  - First find the Thévenin equivalent
  - Since they have the same output voltage and current, the power transferred to the load can be shown as a function of V_{Th}, R_{Th}, ve R_L.

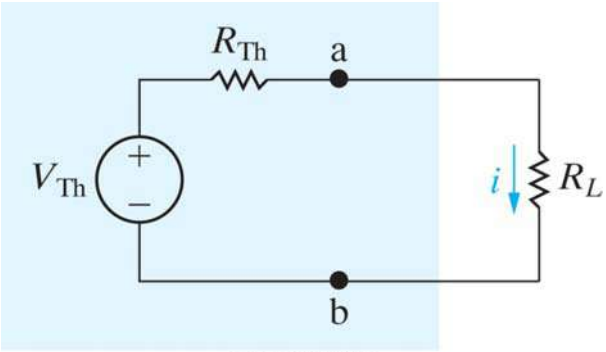

$$p = i^2 R_L = \left(\frac{V_{Th}}{R_{Th} + R_L} \right)^2 R_L$$

Circuit Analysis Techniques

- Maximum Power Transfer (cont.):
  - First find the Thévenin equivalent
  - Since they have the same output voltage and current, the power transferred to the load can be shown as a function of V_{Th}, R_{Th}, ve R_L.

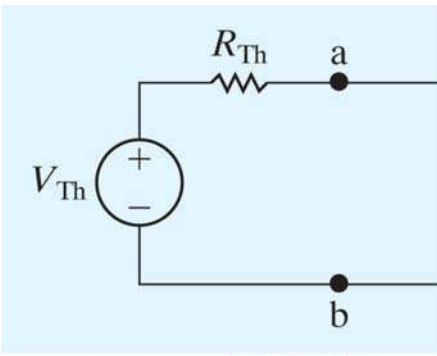

$$p = i^2 R_L = \left(\frac{V_{Th}}{R_{Th} + R_L} \right)^2 R_L$$

constant

constant variable

Circuit Analysis Techniques

- Maximum Power Transfer (cont.):
  - If the first derivative of power is equal to zero then we find an extreme point of the function, in this case the max point of power.

$$\frac{dp}{dR_L} = \frac{d}{dR_L}\left(\frac{V_{Th}^2 R_L}{(R_{Th} + R_L)^2} \right) = \frac{V_{Th}^2 (R_{Th} + R_L)^2 - 2V_{Th}^2 R_L (R_{Th} + R_L)}{(R_{Th} + R_L)^4} = 0$$

$$\Rightarrow V_{Th}^2 (R_{Th} + R_L)^2 - 2V_{Th}^2 R_L (R_{Th} + R_L) = 0$$

$$\Rightarrow R_{Th}^2 + 2R_{Th}R_L + R_L^2 = 2R_L R_{Th} + 2R_L^2$$

$$\boxed{\Rightarrow R_L = R_{Th}}$$

Circuit Analysis Techniques

- Qn. 9: What is R_L for max power transfer. Find max transferred power. What percentage of power delivered by 360V source reaches the load.

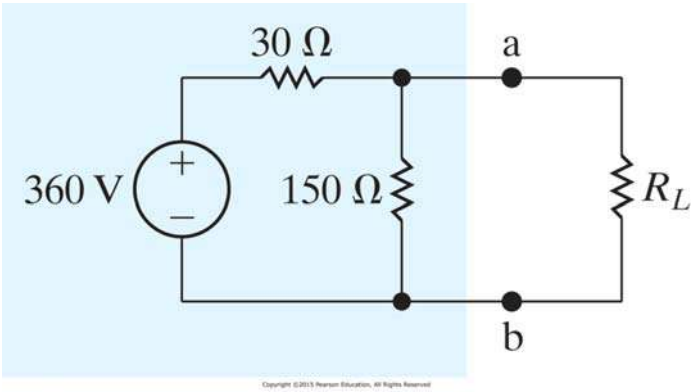

Circuit Analysis Techniques

- Qn. 9 (cont.): What is R_L for max power transfer. Find max transferred power. What percentage of power delivered by 360V source reaches the load.

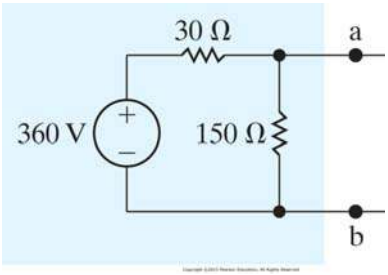

- Kill the source and find R_{Th}.

$$R_{th} = R_L = 30 \| 150 = 25\Omega$$

Circuit Analysis Techniques

- Qn. 9 (cont.): What is R_L for max power transfer. Find max transferred power. What percentage of power delivered by 360V source reaches the load.

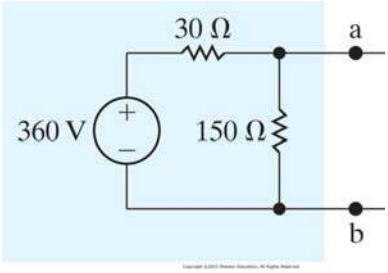

- Kill the source and find R_{Th}.

$$R_{th} = R_L = 30 \| 150 = 25\Omega$$

- Apply voltage division to find V_{Th}.

$$V_{Th} = \frac{150}{180} 360 = 300V$$

Circuit Analysis Techniques

- Qn. 9 (cont.): What is R_L for max power transfer. Find max transferred power. What percentage of power delivered by 360V source reaches the load.

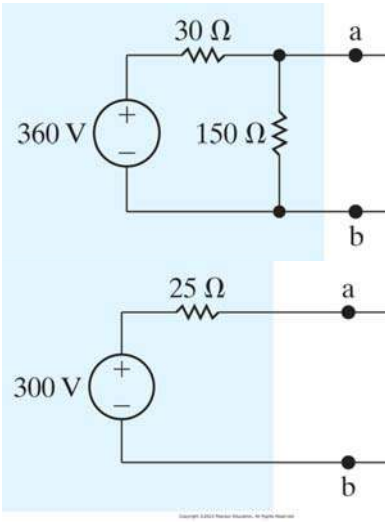

- Kill the source and find R_{Th}.

$$R_{th} = R_L = 30 \| 150 = 25\Omega$$

- Apply voltage division to find V_{Th}.

$$V_{Th} = \frac{150}{180} 360 = 300V$$

2018-2019 SPRING
DR. BARIŞ YÜKSEKKAYA - ELE296
HACETTEPE UNIVERSITY

Circuit Analysis Techniques

- Qn. 9 (cont.): What is R_L for max power transfer. Find max transferred power. What percentage of power delivered by 360V source reaches the load.

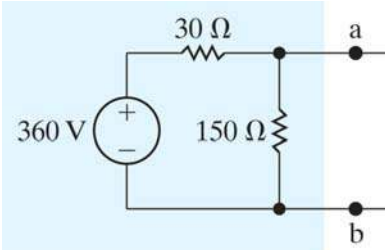

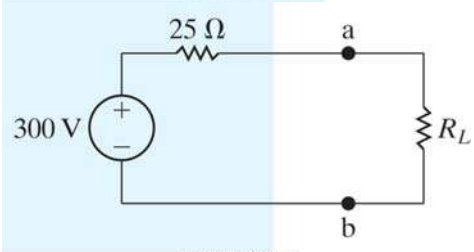

- Kill the source and find R_{Th}.

$$R_{th} = R_L = 30 \| 150 = 25\Omega$$

- Apply voltage division to find V_{Th}.

$$V_{Th} = \frac{150}{180} 360 = 300V$$

- Maximum Power:

$$p = i^2 R_L = (300/50)^2 25 = 900W$$

Circuit Analysis Techniques

- Qn. 9 (cont.): What is R_L for max power transfer. Find max transferred power. What percentage of power delivered by 360V source reaches the load.

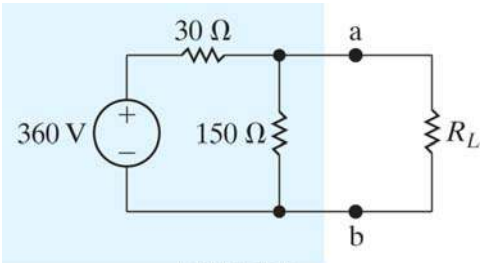

$$i = \frac{360}{30 + (150 \| 25)} = 7A$$

$$p_{360} = -(360)(7) = -2520W$$

- To find the generated power return to the original circuit.
- Find the ratio of transferred power and generated power.

$$p_{\%RL} = \frac{900}{2520} 100 = 35.71\%$$

Circuit Analysis Techniques

- Superposition Technique:
  - Whenever a **LINEAR** system is excited, or driven, by more than one independent source of energy, the total response is the sum of the individual responses.

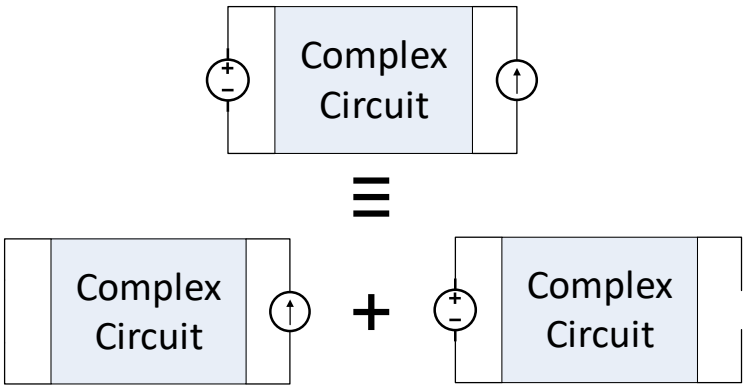

Circuit Analysis Techniques

- Qn. 10: Analyze the circuit using superposition method.

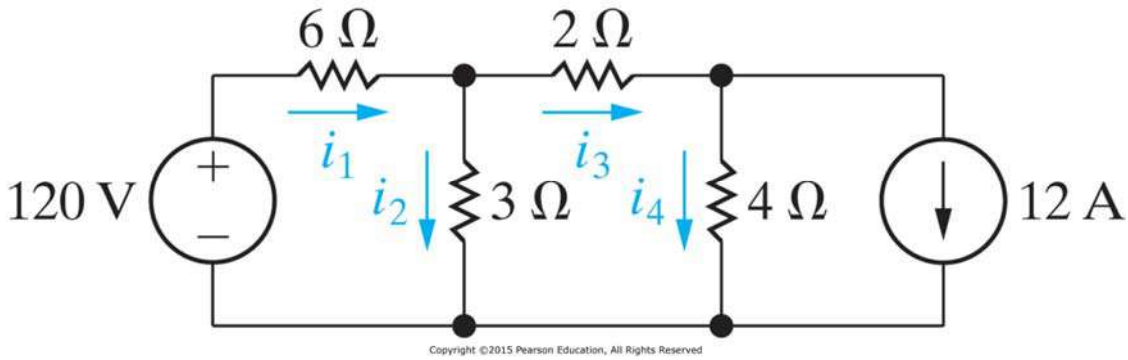

Circuit Analysis Techniques

- Qn. 10 (cont.): Analyze the circuit using superposition method.

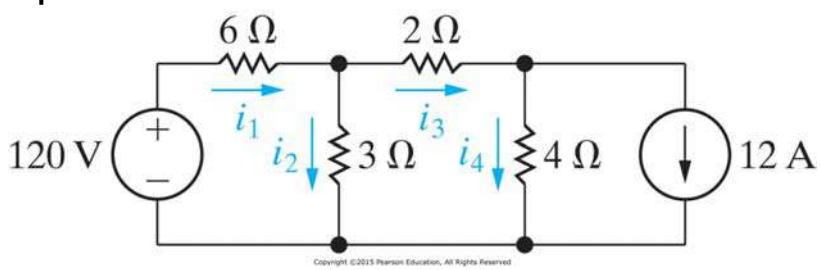

≡

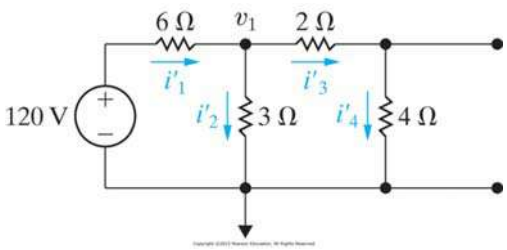

+

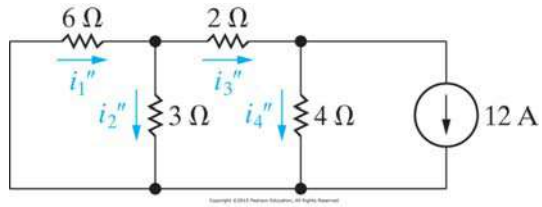

Circuit Analysis Techniques

- Qn. 10 (cont.): Analyze the circuit using superposition method.

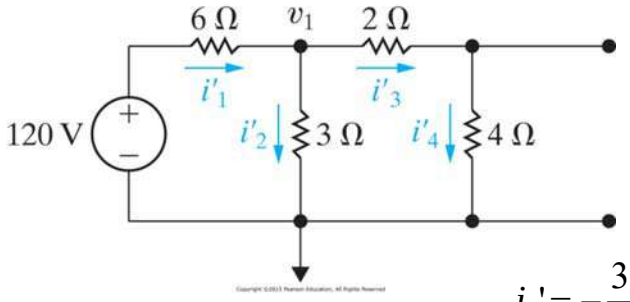

$$\frac{V_1 - 120}{6} + \frac{V_1}{3} + \frac{V_1}{6} = 0$$

$$\Rightarrow V_1 = 30V$$

$$i_1' = -\frac{30-120}{6} = 15A$$

$$i_2' = \frac{30}{3} = 10A$$

$$i_3' = i_4' = \frac{30}{6} = 5A$$

Circuit Analysis Techniques

- Qn. 10 (cont.): Analyze the circuit using superposition method.

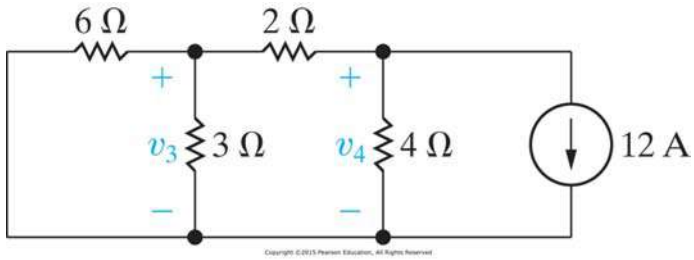

$$\frac{V_3}{6}+\frac{V_3}{3}+\frac{V_3-V_4}{2}=0$$

$$\frac{V_4-V_3}{2}+\frac{V_4}{4}+12=0$$

$$\Rightarrow V_3=-12V, V_4=-24V$$

$$i_1''=-\frac{-12}{6}=2A$$

$$i_2''=\frac{-12}{3}=-4A$$

$$i_3''=\frac{-12-(-24)}{2}=6A$$

$$i_4''=\frac{-24}{4}=-6A$$

Circuit Analysis Techniques

- Qn. 10 (cont.): Analyze the circuit using superposition method.

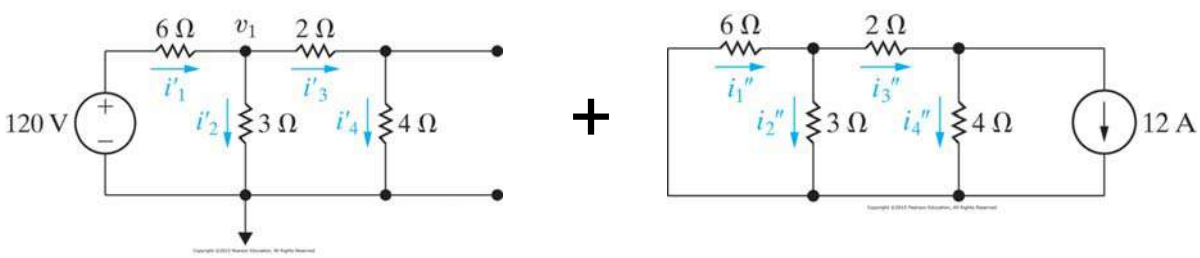

$$\boxed{\begin{aligned} i_1 &= i_1'+i_1''=15+2=17A \\ i_2 &= i_2'+i_2''=10-4=6A \\ i_3 &= i_3'+i_3''=5+6=11A \\ i_4 &= i_4'+i_4''=5-6=-1A \end{aligned}}$$

Course Content

- ~~Circuit Components and Variables, Ohm's Law and Kirchoff's Laws~~
- ~~Circuit Analysis Techniques I - Node Voltage & Mesh Current Methods~~
- ~~Circuit Analysis Techniques II - Thevenin and Norton Equivalent Circuits~~
- First Order RL and RC Circuits
- Phasor Concept and AC Analysis of Circuits
- Midterm
- Introduction to Semiconductors
- Diode Applications
- BJT Analysis
- FET Analysis
- Operational Amplifier
- Midterm
- Logic Gates
- Make-up Exams

Questions

- Qn. 11: Apply source transformation to find v_0.

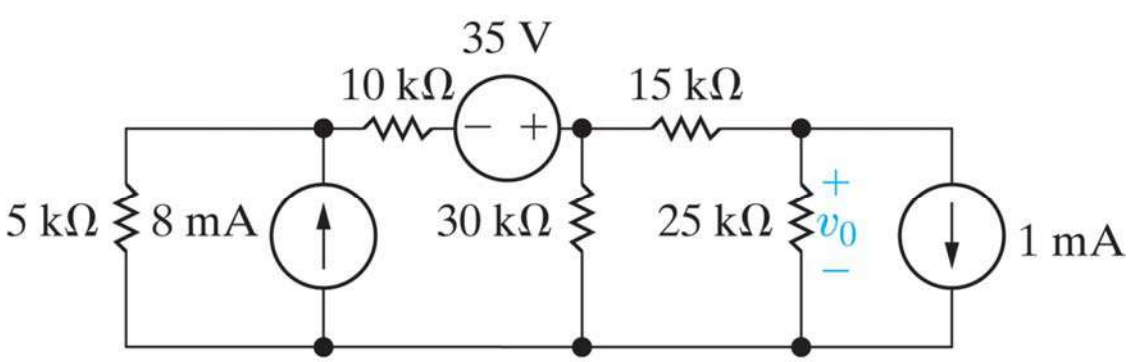

Copyright ©2015 Pearson Education, All Rights Reserved

Questions

- Qn. 12: Find the Norton equivalent w.r.t. Terminals ab.

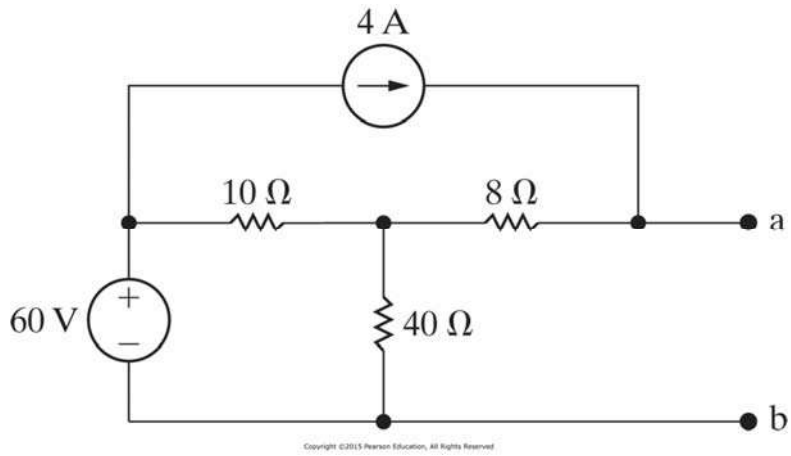

Questions

- Qn. 13: Find the Thévenin equivalent w.r.t. Terminals ab.

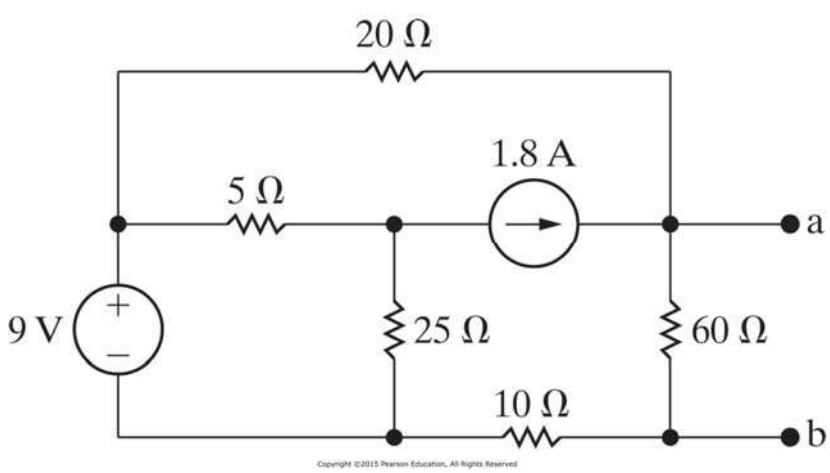

Questions

- Qn. 14: The Wheatstone bridge is at balance for $R_3=3000\Omega$. If the internal resistance of the Galvanometer is 50Ω, what will be the value of the current on the Galvanometer for $R_3=3003\Omega$.

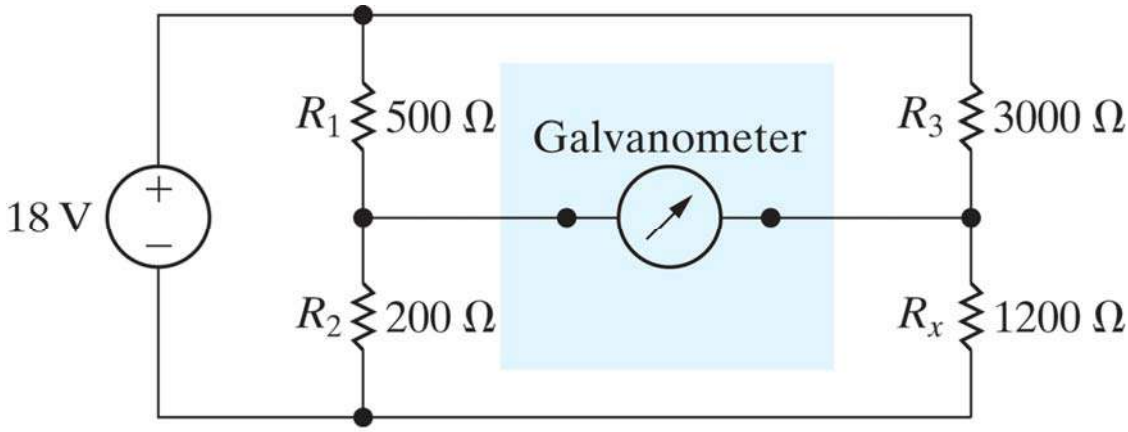

Copyright ©2015 Pearson Education, All Rights Reserved

Questions

- Qn. 15: What should be the value of the variable resistance R_0 in order to deliver max power to 6Ω load resistor.

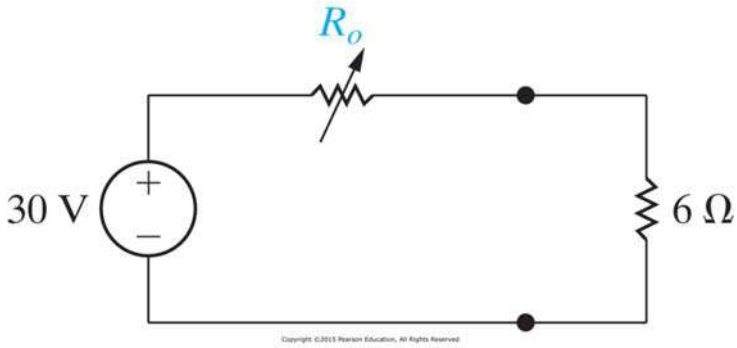

Questions

- Qn. 16: Use superposition to find the voltage on the 20Ω resistor.

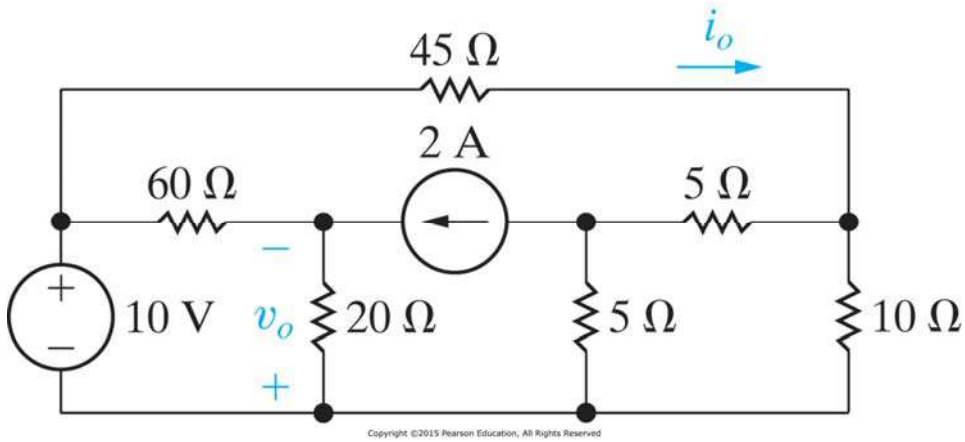

ELE 296 Basic Electric Circuits and Electronics

- Inductane and Capacitance
  - Inductor
  - Capacitor
- Natural Response of First Order RL and RC Circuits

Inductance and Capacitance

- Inductor:

Copyright ©2015 Pearson Education, All Rights Reserved

- It is composed of a coil of wire wound around a supporting core.
- If the current in the coil is varying with time then the magnetic field is varying with time.
- A timevarying magnetic field induces a voltage in any conductor linked by the field.
- The circuit parameter of inductance relates the induced voltage to the current.

Inductance and Capacitance

- Inductor:

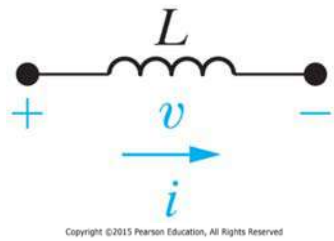

The voltage across the inductor:

$$v = \mp L \frac{di}{dt}$$

Here,

L Inductance [Henry] v Voltage [Volts]

i current [Amperes] t Time [s]

Inductance and Capacitance

- Inductor (cont.):

$$v = \mp L \frac{di}{dt}$$

If the current is **constant** then the voltage becomes zero.

Therefore the inductor can be replaced by short circuit. (We will use this property in the first order response.)

Current cannot change instantaneously in an inductor; that is, the current cannot make jumps.

Because this change would require an infinite voltage.

Inductance and Capacitance

- Qn. 1: Find the voltage v.

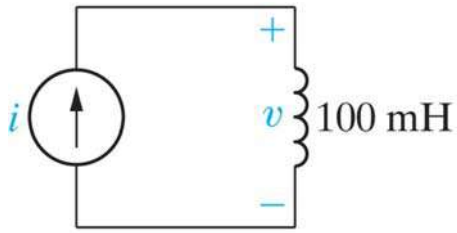

$$i = 0, \qquad t < 0$$

$$i = 10te^{-5t}\text{A}, \qquad t > 0$$

Copyright ©2015 Pearson Education, All Rights Reserved

Inductance and Capacitance

- Qn. 1 (cont.): Find the voltage v.

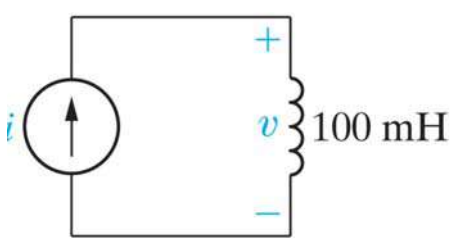

Copyright ©2015 Pearson Education, All Rights Reserved

$$i = 0, \qquad t < 0$$

$$i = 10te^{-5t}\text{A}, \qquad t > 0$$

$$\frac{di}{dt} = 10e^{-5t} - 50te^{-5t}$$

!!!

$$v = L\frac{di}{dt} = e^{-5t} - 5te^{-5t}\ \text{V}, \qquad t \geq 0$$

Inductance and Capacitance

- Inductor (cont.):

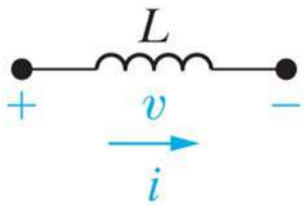

Copyright ©2015 Pearson Education, All Rights Reserved

The current on an inductor:

$$v = L\frac{di}{dt} \Rightarrow vdt = Ldi \Rightarrow \int_{t_0}^{t} vdt = L\int_{t_0}^{t} di$$

$$i(t) = \frac{1}{L}\int_{t_0}^{t} vdt + i(t_0)$$

Inductance and Capacitance

- Qn. 2: Find the current on the inductor.

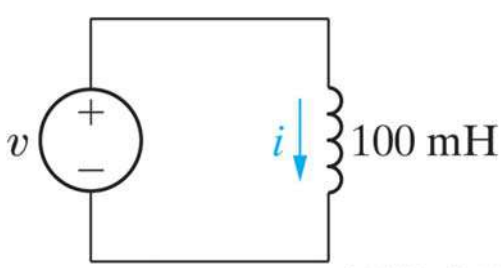

$$v = 0, \qquad t < 0$$

$$v = 20te^{-10t}\,\text{V}, \quad t > 0$$

Copyright ©2015 Pearson Education, All Rights Reserved

Inductance and Capacitance

- Qn. 2 (cont.): Find the current on the inductor.

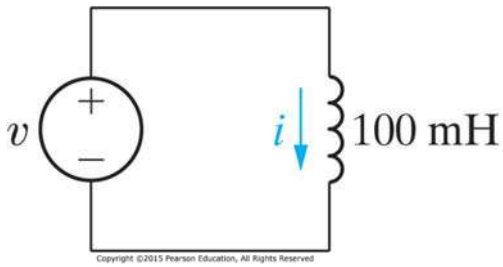

$$i = 0, \qquad t \le 0$$
$$v = 0, \qquad t < 0$$
$$v = 20te^{-10t}V, \qquad t > 0$$

$$i(t) = \frac{1}{L}\int_{t_0}^{t} v\,dt + i(t_0)$$

$$i(t) = 10\int_{t_0}^{t} 20te^{-10t}\,dt + 0$$

!!!

$$i(t) = \left(2 - 20te^{-10t} - 2e^{-10t}\right)A, \qquad t > 0$$

Inductance and Capacitance

- Power and Energy in the Inductor:

$$p = vi \Rightarrow \quad \boxed{p = iL\frac{di}{dt}} \quad \text{or} \quad \boxed{p = v\left[\frac{1}{L}\int_{t_0}^{t} v\,dt + i(t_0)\right]}$$

$$p = \frac{dw}{dt} \Rightarrow \quad \frac{dw}{dt} = iL\frac{di}{dt} \Rightarrow \quad dw = iL\,di$$

$$\int_{0}^{i\to w} dw = L\int_{0}^{i} i\,di \Rightarrow \quad \boxed{w = \frac{1}{2}Li^2}$$

Inductance and Capacitance

- Power and Energy in the Inductor (cont.):

$$dw = iLdi \Rightarrow \int_{w(t_0)}^{i(t)\to w(t)} dw = L\int_{i(t_0)}^{i(t)} idi$$

$$\Rightarrow \quad w(t) - w(t_0) = \frac{1}{2}Li^2(t) - \frac{1}{2}Li^2(t_0)$$

If the initial current on an inductor is non-zero then that inductor has stored energy!!!

Inductance and Capacitance

- Qn. 4: Find the power and energy in the inductor.

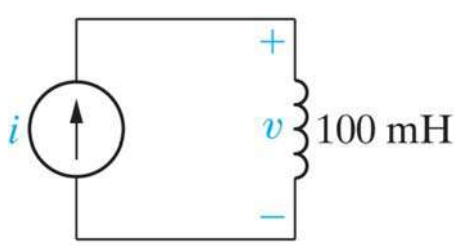

$i = 0, \qquad t < 0$

$i = 10te^{-5t}\text{A}, \qquad t > 0$

Copyright ©2015 Pearson Education, All Rights Reserved

$$p = iL\frac{di}{dt} = 10te^{-5t} \times 0.1 \times \left(10e^{-5t} - 50te^{-5t}\right) = 10te^{-10t} - 50t^2e^{-10t}$$

$$w = \frac{1}{2}Li^2 = 5t^2e^{-10t}$$

Inductance and Capacitance

- Qn. 4 (cont.):

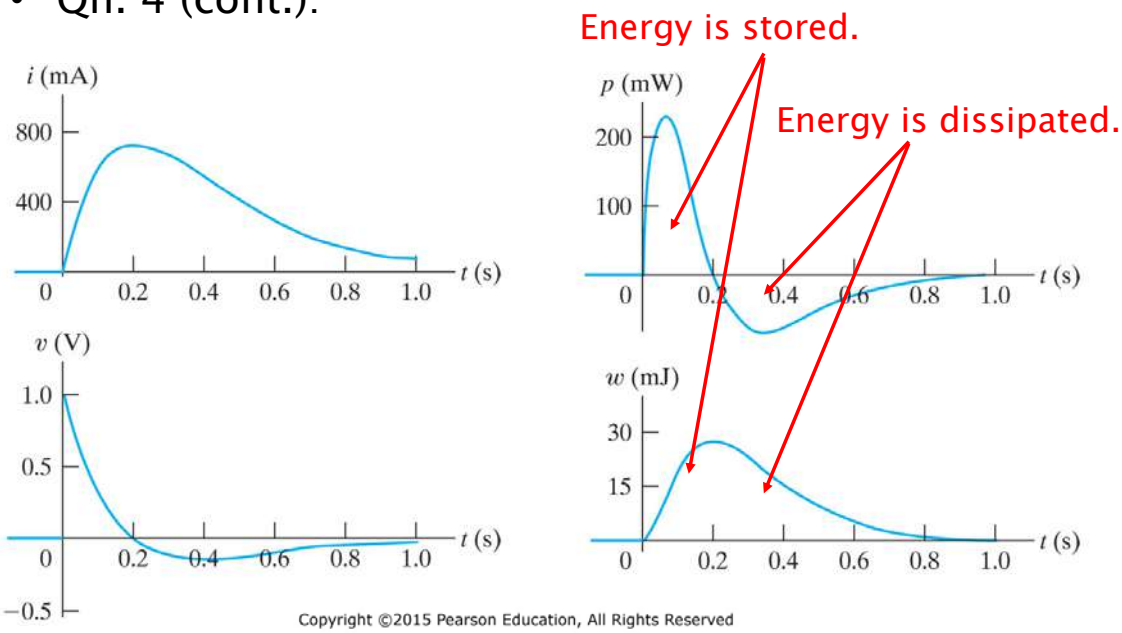

Copyright ©2015 Pearson Education, All Rights Reserved

Inductance and Capacitance

- Capacitor:

Copyright ©2015 Pearson Education, All Rights Reserved

- It consists of two conductors separated by an insulator or dielectric material.
- The separation of charge, or voltage creates an electric field.
- If the voltage is varying with time, the electric field is varying with time.
- A time-varying electric field produces a displacement current in the space occupied by the field.
- The circuit parameter of capacitance relates the displacement current to the voltage.

Inductance and Capacitance

- Capacitor:

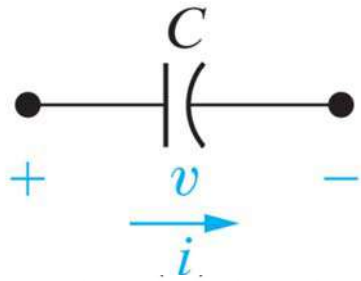

Copyright ©2015 Pearson Education, All Rights Reserved

The current on a capacitor:

$$i = \mp C \frac{dv}{dt}$$

Here,

C Capacitance [Farad] v Voltage [Volts]
i Current [Amperes] t Time [s]

Inductance and Capacitance

- Capacitor (cont.):

$$i = \mp C \frac{dv}{dt}$$

If the voltage is **constant** then the current is zero.

Therefore the capacitor can be replaced with open circuit. (We will use this property in the first order response.)

The voltage on a capacitor cannot change instantaneously across the terminals of the capacitor.

Such a change would produce infinite current.

Inductance and Capacitance

- Capacitor (cont.):

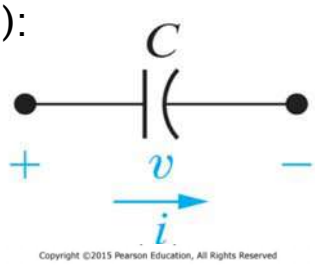

The voltage across the terminals of a capacitor:

$$i = C\frac{dv}{dt} \Rightarrow idt = Cdv \Rightarrow \int_{t_0}^{t} idt = C\int_{t_0}^{t} dv$$

$$v(t) = \frac{1}{C}\int_{t_0}^{t} idt + v(t_0)$$

Inductance and Capacitance

- Power and Energy in the Capacitor :

$$p = vi \Rightarrow \boxed{p = vC\frac{dv}{dt}} \quad \text{or} \quad \boxed{p = \left[\frac{1}{C}\int_{t_0}^{t} idt + v(t_0)\right]i}$$

$$p = \frac{dw}{dt} \Rightarrow \frac{dw}{dt} = vC\frac{dv}{dt} \Rightarrow dw = Cvdv$$

$$\int_{0}^{v\to w} dw = C\int_{0}^{v} vdv \Rightarrow \boxed{w = \frac{1}{2}Cv^2}$$

Inductance and Capacitance

- Power and Energy in the Capaciot (cont.):

$$dw = Cvdv \Rightarrow \int_{w(t_0)}^{v(t)\to w(t)} dw = C\int_{v(t_0)}^{v(t)} vdv$$

$$\Rightarrow \quad w(t) - w(t_0) = \frac{1}{2}Cv^2(t) - \frac{1}{2}Cv^2(t_0)$$

If the initial voltage on a capacitoris non-zero then that inductor has stored energy!!!

Inductance and Capacitance

- Qn. 4: The Voltage of 0.5μF capacitor is given below.

  Find the current, power, and energy of the capacitor.

  Draw the voltage, current, power, and energy graphs.

$$v(t) = \begin{cases} 0, & t \le 0 \\ 4t\text{V}, & 0 \le t \le 1s \\ 4e^{-(t-1)}\text{V}, & t \ge 1s \end{cases}$$

Inductance and Capacitance

- Qn. 4 (cont.): Find the current, power, and energy of the capacitor.

$$v(t)=\begin{cases} 0, & t\le 0 \\ 4t\text{V}, & 0\le t\le 1s \\ 4e^{-(t-1)}\text{V}, & t\ge 1s \end{cases} \qquad i=C\frac{dv}{dt} \qquad i(t)=\begin{cases} 0, & t\le 0 \\ 2\mu\text{A}, & 0\le t\le 1s \\ -2e^{-(t-1)}\mu\text{A}, & t\ge 1s \end{cases}$$

Inductance and Capacitance

- Qn. 4 (cont.): Find the current, power, and energy of the capacitor.

$$v(t)=\begin{cases} 0, & t\le 0 \\ 4t\text{V}, & 0\le t\le 1s \\ 4e^{-(t-1)}\text{V}, & t\ge 1s \end{cases} \qquad i=C\frac{dv}{dt} \qquad i(t)=\begin{cases} 0, & t\le 0 \\ 2\mu\text{A}, & 0\le t\le 1s \\ -2e^{-(t-1)}\mu\text{A}, & t\ge 1s \end{cases}$$

$$p=vi$$

$$p(t)=\begin{cases} 0, & t\le 0 \\ 8t\mu\text{W}, & 0\le t\le 1s \\ -8e^{-2(t-1)}\mu\text{W}, & t\ge 1s \end{cases}$$

Inductance and Capacitance

- Qn. 4 (cont.): Find the current, power, and energy of the capacitor.

$$v(t)=\begin{cases}0, & t\le 0\\ 4t\text{V}, & 0\le t\le 1\text{s}\\ 4e^{-(t-1)}\text{V}, & t\ge 1\text{s}\end{cases}\qquad i=C\frac{dv}{dt}\qquad i(t)=\begin{cases}0, & t\le 0\\ 2\mu\text{A}, & 0\le t\le 1\text{s}\\ -2e^{-(t-1)}\mu\text{A}, & t\ge 1\text{s}\end{cases}$$

$$p=vi\qquad\qquad w=\frac{1}{2}Cv^2$$

$$p(t)=\begin{cases}0, & t\le 0\\ 8t\mu\text{W}, & 0\le t\le 1\text{s}\\ -8e^{-2(t-1)}\mu\text{W}, & t\ge 1\text{s}\end{cases}\qquad w(t)=\begin{cases}0, & t\le 0\\ 4t^2\mu\text{J}, & 0\le t\le 1\text{s}\\ 4e^{-2(t-1)}\mu\text{J}, & t\ge 1\text{s}\end{cases}$$

Inductance and Capacitance

- Qn. 4 (cont.): Draw the voltage, current, power, and energy graphs.

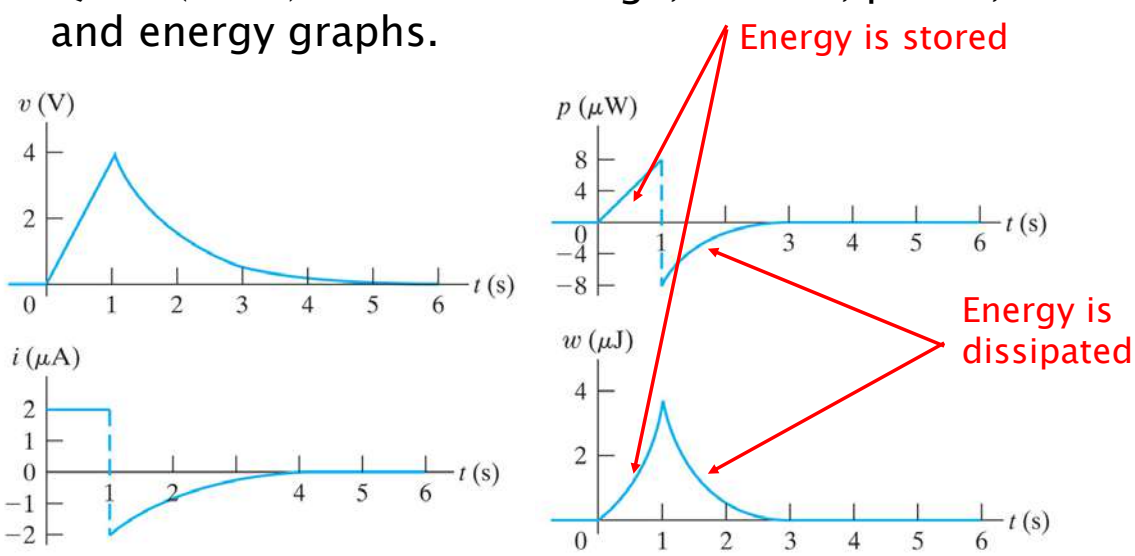

Copyright ©2015 Pearson Education, All Rights Reserved

Inductance and Capacitance

- Qn. 5: An initially uncharged capacitor with capacitance 0.2μF has a current given below.
  Find the current, power, and energy of the capacitor.
  Draw the voltage, current, power, and energy graphs.

$$i(t)=\begin{cases} 0, & t\le 0 \\ 5000t\ \text{A} & 0\le t\le 20\mu\text{s} \\ 0.2-5000t\ \text{A} & 20\mu\text{s}\le t\le 40\mu\text{s} \\ 0, & t\ge 40\mu\text{s} \end{cases}$$

Inductance and Capacitance

- Qn. 5 (cont.): Find the current, power, and energy of the capacitor.

$$i(t)=\begin{cases} 0, & t\le 0 \\ 5000t\ \text{A} & 0\le t\le 20\mu\text{s} \\ 0.2-5000t\ \text{A} & 20\mu\text{s}\le t\le 40\mu\text{s} \\ 0, & t\ge 40\mu\text{s} \end{cases}$$

$$v(t)=\frac{1}{C}\int_{t_0}^{t} i\,dt+v(t_0)$$

$$t\le 0$$

$$v(t)=0,\quad t\le 0$$

Inductance and Capacitance

- Qn. 5 (cont.): Find the current, power, and energy of the capacitor.

$$i(t)=\begin{cases} 0, & t\le 0 \\ 5000t \text{ A} & 0\le t\le 20\mu s \\ 0.2-5000t \text{ A} & 20\mu s\le t\le 40\mu s \\ 0, & t\ge 40\mu s \end{cases}$$

$$v(t)=\frac{1}{C}\int_{t_0}^{t} i\,dt+v(t_0)$$

$$0\le t\le 20\mu s$$

$$v(t)=\frac{1}{C}\int_{t_0}^{t} i\,dt+v(t_0)=\frac{1}{0.2\mu F}\int_{0}^{t} 5000t\,dt+0$$

$$v(t)=12.5\times 10^9 t^2 \text{ V}, \quad 0\le t\le 20\mu s$$

Inductance and Capacitance

- Qn. 5 (cont.): Find the current, power, and energy of the capacitor.

$$i(t)=\begin{cases} 0, & t\le 0 \\ 5000t \text{ A} & 0\le t\le 20\mu s \\ 0.2-5000t \text{ A} & 20\mu s\le t\le 40\mu s \\ 0, & t\ge 40\mu s \end{cases}$$

$$v(t)=\frac{1}{C}\int_{t_0}^{t} i\,dt+v(t_0)$$

$$20\mu s\le t\le 40\mu s$$

$$v(t)=\frac{1}{C}\int_{t_0}^{t} i\,dt+v(t_0)=\frac{1}{0.2\mu F}\int_{20\mu s}^{t} (0.2-5000t)\,dt+5$$

$$v(t)=\left(10^6 t-12.5\times 10^9 t^2-10\right)\text{V}, \quad 20\mu s\le t\le 40\mu s$$

Inductance and Capacitance

- Qn. 5 (cont.): Find the current, power, and energy of the capacitor.

$$i(t)=\begin{cases} 0, & t\le 0 \\ 5000t\ \text{A} & 0\le t\le 20\mu s \\ 0.2-5000t\ \text{A} & 20\mu s\le t\le 40\mu s \\ 0, & t\ge 40\mu s \end{cases}$$

$$v(t)=\frac{1}{C}\int_{t_0}^{t} i\,dt+v(t_0),\quad v(t_0)=0$$

$$t\ge 40\mu s$$

$$v(t)=\frac{1}{C}\int_{t_0}^{t} i\,dt+v(t_0)=\frac{1}{0.2\mu F}\int_{40\mu s}^{t} 0\,dt+10$$

$$v(t)=10\ \text{V},\quad t\ge 40\mu s$$

Inductance and Capacitance

- Qn. 5 (cont.): Find the current, power, and energy of the capacitor.

$$i(t)=\begin{cases} 0, & t\le 0 \\ 5000t\ \text{A} & 0\le t\le 20\mu s \\ 0.2-5000t\ \text{A} & 20\mu s\le t\le 40\mu s \\ 0, & t\ge 40\mu s \end{cases}\qquad v(t)=\begin{cases} 0, & t\le 0 \\ 12.5\times 10^{9}t^{2}\ \text{V} & 0\le t\le 20\mu s \\ \left(10^{6}t-12.5\times 10^{9}t^{2}-10\right)\text{V} & 20\mu s\le t\le 40\mu s \\ 10\ \text{V}, & t\ge 40\mu s \end{cases}$$

$$p=vi$$

$$p(t)=\begin{cases} 0, & t\le 0 \\ 62.5\times 10^{12}t^{3}\ \text{W} & 0\le t\le 20\mu s \\ \left(62.5\times 10^{12}t^{3}-7.5\times 10^{9}t^{2}+2.5\times 10^{5}-2\right)\text{W} & 20\mu s\le t\le 40\mu s \\ 0, & t\ge 40\mu s \end{cases}$$

Inductance and Capacitance

- Qn. 5 (cont.): Find the current, power, and energy of the capacitor.

$$i(t)=\begin{cases} 0, & t\le 0 \\ 5000t\ \text{A} & 0\le t\le 20\mu s \\ 0.2-5000t\ \text{A} & 20\mu s\le t\le 40\mu s \\ 0, & t\ge 40\mu s \end{cases} \qquad v(t)=\begin{cases} 0, & t\le 0 \\ 12.5\times 10^9 t^2\ \text{V} & 0\le t\le 20\mu s \\ \left(10^6 t-12.5\times 10^9 t^2-10\right)\text{V} & 20\mu s\le t\le 40\mu s \\ 10\ \text{V}, & t\ge 40\mu s \end{cases}$$

$$w=\frac{1}{2}Cv^2$$

$$w(t)=\begin{cases} 0, & t\le 0 \\ 15.625\times 10^{12} t^4\ \text{J} & 0\le t\le 20\mu s \\ \left(15.625\times 10^{12} t^4-2.5\times 10^9 t^3+0.125\times 10^6 t^2-2t+10^{-5}\right)\text{J} & 20\mu s\le t\le 40\mu s \\ 10\ \mu\text{J}, & t\ge 40\mu s \end{cases}$$

Inductance and Capacitance

- Qn. 5 (cont.): Draw the voltage, current, power, and energy graphs.

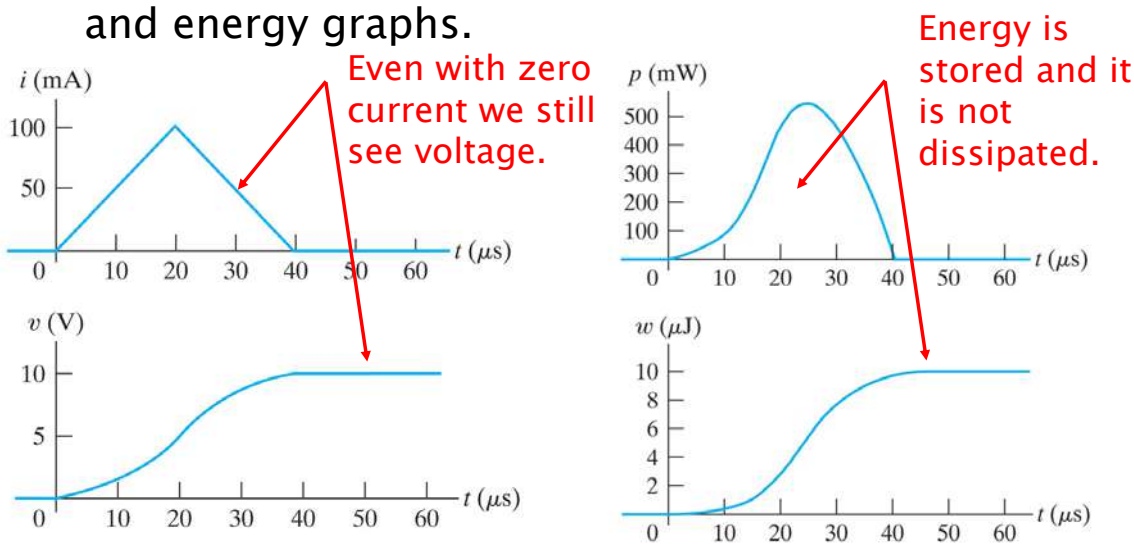

Copyright ©2015 Pearson Education, All Rights Reserved

Inductance and Capacitance

- Series and Parallel Connected Inductors:

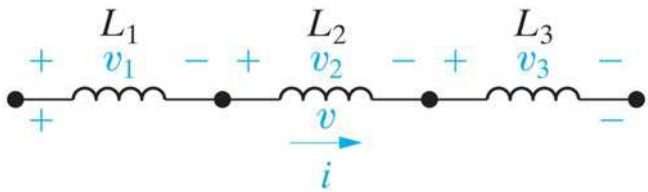

Copyright © 2008 Pearson Prentice Hall, Inc.

$$v_1 = L_1 \frac{di}{dt}, \quad v_2 = L_2 \frac{di}{dt}, \quad v_3 = L_3 \frac{di}{dt}$$

$$KVL: v = v_1 + v_2 + v_3 = (L_1 + L_2 + L_3)\frac{di}{dt}$$

•Serially connected inductors are added.

Inductance and Capacitance

- Series and Parallel Connected Inductors (cont.):

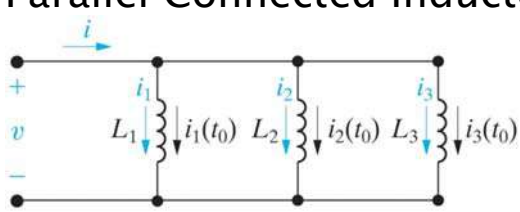

Copyright © 2008 Pearson Prentice Hall, Inc.

$$i_1 = \frac{1}{L_1}\int_{t_0}^{t} v\,dt + i_1(t_0), \quad i_2 = \frac{1}{L_2}\int_{t_0}^{t} v\,dt + i_2(t_0), \quad i_3 = \frac{1}{L_3}\int_{t_0}^{t} v\,dt + i_3(t_0)$$

$$KCL: i = i_1 + i_2 + i_3 = \underbrace{\left(\frac{1}{L_1} + \frac{1}{L_2} + \frac{1}{L_3}\right)}_{1/L_{eq}}\int_{t_0}^{t} v\,dt + \underbrace{i_1(t_0) + i_2(t_0) + i_3(t_0)}_{i(t_0)}$$

•For parallel inductors the inverse of inductances are added and then the result is reversed.

Inductance and Capacitance

- Series and Parallel Connected Capacitors:

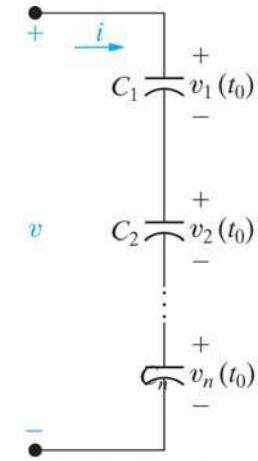

Copyright © 2008 Pearson Prentice Hall, Inc.

$$v_1(t) = \frac{1}{C_1}\int_{t_0}^{t} i(t)dt + v_1(t_0)$$

$$v_2(t) = \frac{1}{C_2}\int_{t_0}^{t} i(t)dt + v_2(t_0)$$

$$v_3(t) = \frac{1}{C_3}\int_{t_0}^{t} i(t)dt + v_3(t_0)$$

$$KVL: v = v_1 + v_2 + v_3 = \underbrace{\left(\frac{1}{C_1} + \frac{1}{C_2} + \frac{1}{C_3}\right)}_{1/C_{eq}}\int_{t_0}^{t} i(t)dt + \underbrace{\left(v_1(t_0) + v_2(t_0) + v_3(t_0)\right)}_{v(t_0)}$$

•For series capacitors the inverse of capacitances are added and then the result is reversed.

Inductance and Capacitance

- Series and Parallel Connected Capacitors (cont.):

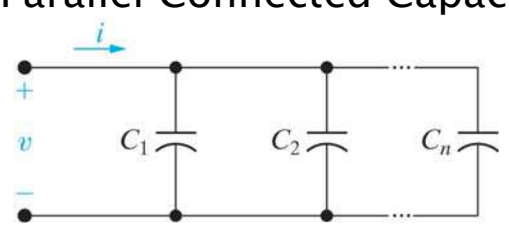

Copyright © 2008 Pearson Prentice Hall, Inc.

$$i_1 = C_1\frac{dv}{dt}, \quad i_2 = C_2\frac{dv}{dt}, \quad i_3 = C_3\frac{dv}{dt}$$

$$KCL: i = i_1 + i_2 + i_3 = \underbrace{(C_1 + C_2 + C_3)}_{C_{eq}}\frac{dv}{dt}$$

•Parallel connected capacitors are added.

First Order RL and RC Natural Response

- We will investigate circuits with DC sources and resistor/capacitor or resistor/inductor pair.
- We use first order differential equations in order to analyse the circuit.
- Natural Response: The stored energy in the inductor or the capacitor is released on a circuit without a source.
- Step Response: A source is connected to an RL or RC circuit.

First Order RL and RC Natural Response

- If the circuit can be simplified as Thevenin Equivalent+Inductor/Capacitor or Norton Equivalent+Inductor/Capacitor then it is a first order circuit.

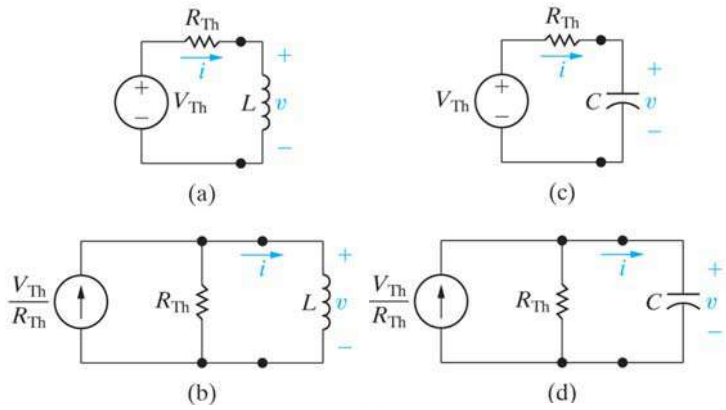

Copyright ©2015 Pearson Education, All Rights Reserved

First Order RL and RC Natural Response

- Natural Response of RL Circuit:

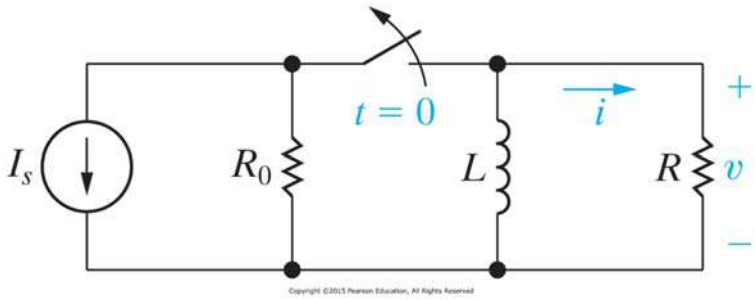

•Switch is closed for a **long time** and it will open at $t = 0$.
•Long time=Constant DC current is flowing in the circuit
=Inductor is short circuit ($t < 0$)

First Order RL and RC Natural Response

- Natural Response of RL Circuit (cont.):

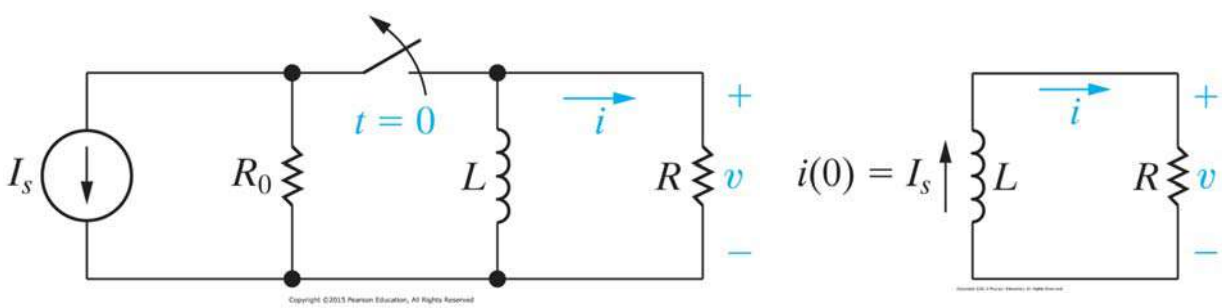

•Switch is closed for a **long time** and it will open at $t = 0$.
•Long time=Constant DC current is flowing in the circuit
=Inductor is short circuit ($t < 0$)
•The problem is to find the voltages and currents after the switch is opened ($t \geq 0$).

First Order RL and RC Natural Response

- Natural Response of RL Circuit (cont.):

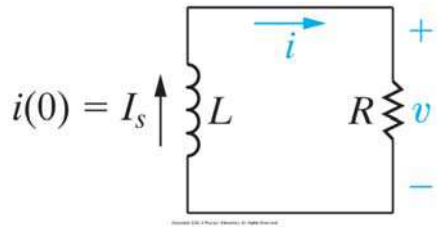

$$KVL: v_L + v = L\frac{di}{dt} + Ri = 0$$

$$L\frac{di}{dt} + Ri = 0 \Rightarrow \frac{di}{dt}dt = -\frac{R}{L}idt \Rightarrow \frac{di}{i} = -\frac{R}{L}dt$$

$$\int_{i(t_0)}^{i(t)} \frac{dx}{x} = -\frac{R}{L}\int_{t_0}^{t} dy \overset{t_0=0}{\Rightarrow} \ln(x)\Big|_{i(0)}^{i(t)} = -\frac{R}{L}y\Big|_0^t \Rightarrow \ln\left(\frac{i(t)}{i(0)}\right) = -\frac{R}{L}t \Rightarrow \boxed{i(t) = i(0)e^{-(R/L)t}}$$

First Order RL and RC Natural Response

- Natural Response of RL Circuit (cont.):

  - The current on inductor will not make a sudden change:

$$i(0^-) = i(0^+) = I_0$$

$$\boxed{i(t) = I_0 e^{-(R/L)t}, \quad t \geq 0}$$

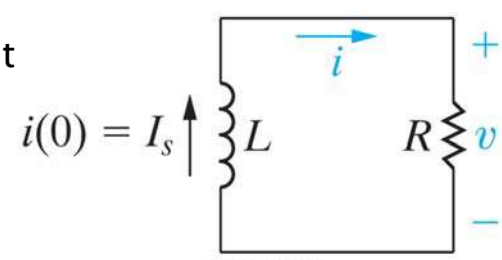

First Order RL and RC Natural Response

- Natural Response of RL Circuit (cont.):

  •Inductor voltage can change suddenly:

$$v(t) = 0 \qquad t < 0$$

$$v(t) = iR = RI_0 e^{-(R/L)t}, \quad t \geq 0^+$$

$$v(0^-) = 0, v(0^+) = I_0 R$$

$v(0) \Rightarrow$ not defined.

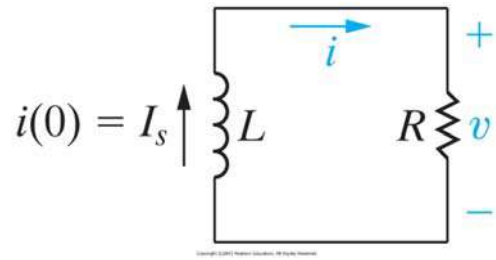

First Order RL and RC Natural Response

- Natural Response of RL Circuit (cont.):

  •Inductor voltage can change suddenly:

$$v(t) = 0 \qquad t < 0$$

$$v(t) = iR = RI_0 e^{-(R/L)t}, \quad t \geq 0^+$$

$$v(0^-) = 0, v(0^+) = I_0 R$$

$v(0) \Rightarrow$ not defined.

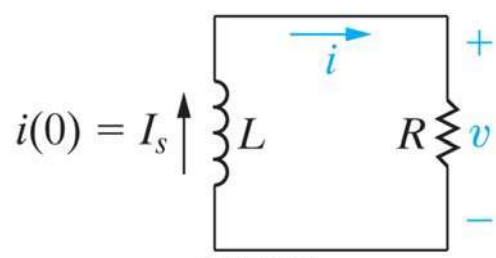

•Power and Energy:

$$p(t) = v(t)i(t) = RI_0^2 e^{-2(R/L)t}, \quad t \geq 0^+$$

$$w(t) = \int_0^t p(t) = \frac{1}{2} LI_0^2 \left(1 - e^{-2(R/L)t}\right), \quad t \geq 0$$

First Order RL and RC Natural Response

- Natural Response of RL Circuit (cont.):

$$i(t) = I_0 e^{-(R/L)t}, \quad t \geq 0$$

the rate at which the current or voltage approaches zero

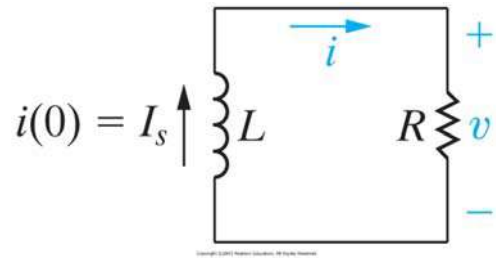

•Time Constant: $\tau = \dfrac{L}{R}$

t	$e^{-t/\tau}$	t	$e^{-t/\tau}$
τ	3.6788×10^{-1}	6τ	2.4788×10^{-3}
2τ	1.3534×10^{-1}	7τ	9.1188×10^{-4}
3τ	4.9787×10^{-2}	8τ	3.3546×10^{-4}
4τ	1.8316×10^{-2}	9τ	1.2341×10^{-4}
5τ	6.7379×10^{-3}	10τ	4.5400×10^{-5}

After 5 time constants it is accepted that the circuit has entered steady state. Inductor is short circuited.

First Order RL and RC Natural Response

- Qn. 6: What is $i_L(t)$ for $t \geq 0$?
  What is $i_o(t)$ for $t \geq 0^+$?
  What is $v_o(t)$ for $t \geq 0^+$?

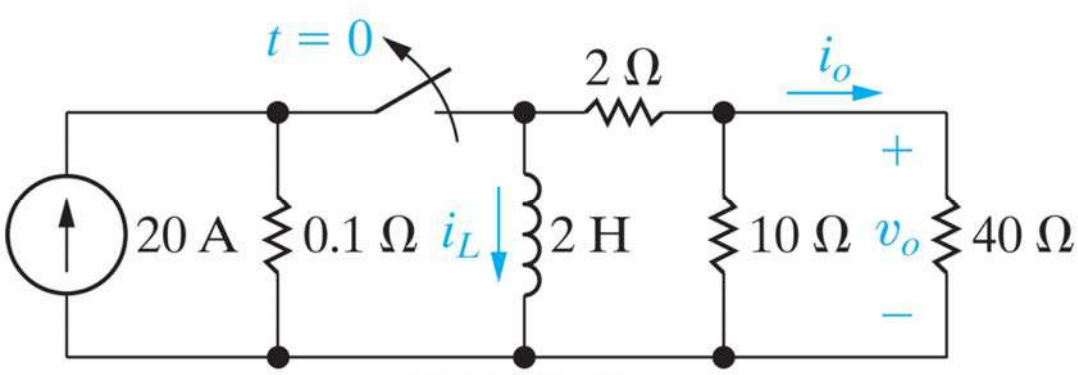

Copyright ©2015 Pearson Education, All Rights Reserved

First Order RL and RC Natural Response

- Qn. 6 (cont.): What is $i_L(t)$ for $t \geq 0$?

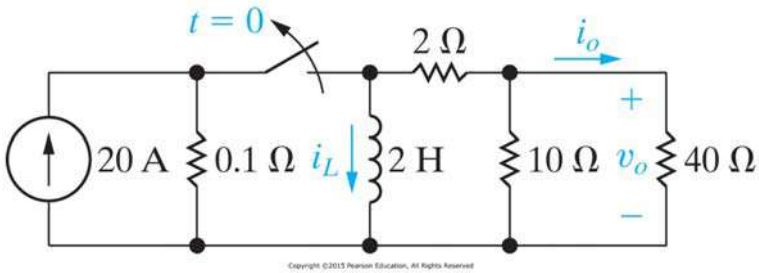

$$i_L(0^-) = i_L(0^+) = 20\text{A}$$

$$\tau = \frac{L}{R_{eq}} = \frac{2H}{2\Omega + 10\Omega \| 40\Omega} = \frac{1}{5}$$

$$\boxed{i_L(t) = I_0 e^{-t/\tau} = 20e^{-5t}\text{A}, \quad t \geq 0}$$

First Order RL and RC Natural Response

- Qn. 6 (cont.): What is $i_o(t)$ for $t \geq 0^+$?

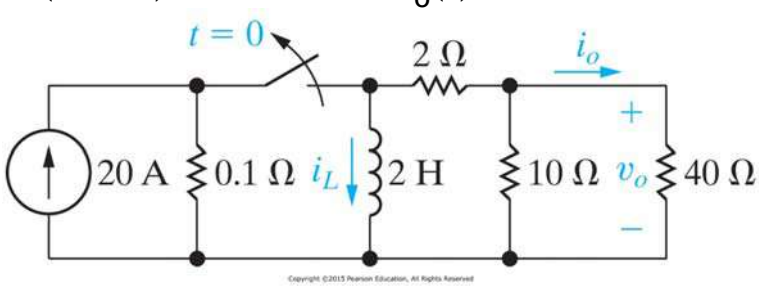

$$\boxed{i_o(t) = -\frac{10}{10+40} i_L(t) = -4e^{-5t}\text{A}, \quad t \geq 0^+}$$

First Order RL and RC Natural Response

- Qn. 6 (cont.): What is $i_o(t)$ for $t \geq 0^+$?

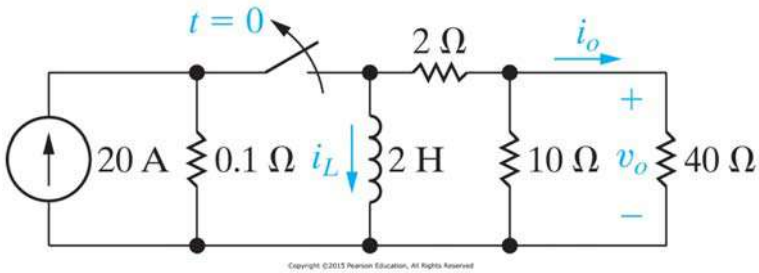

$$\boxed{i_o(t) = -\frac{10}{10+40} i_L(t) = -4e^{-5t}\text{A}, \quad t \geq 0^+}$$

$$i_o(0^-) = 0\text{A}$$

$$\Rightarrow i_o(0^-) \neq i_o(0^+)$$

First Order RL and RC Natural Response

- Qn. 6 (cont.): What is $v_o(t)$ for $t \geq 0^+$?

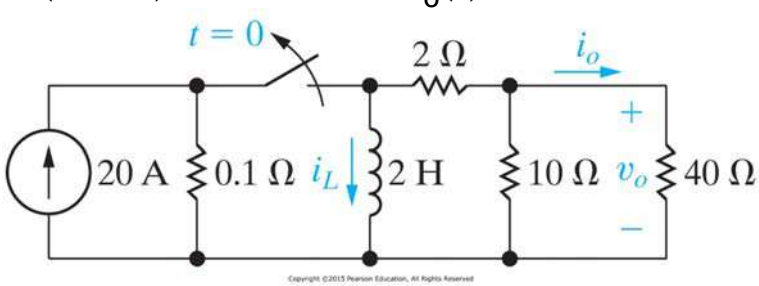

$$i_o(t) = -4e^{-5t}\text{A}, \quad t \geq 0^+$$

$$\boxed{v_o(t) = 40 i_o(t) = -160e^{-5t}\text{V}, \quad t \geq 0^+}$$

First Order RL and RC Natural Response

- Natural Response of RC Circuit:

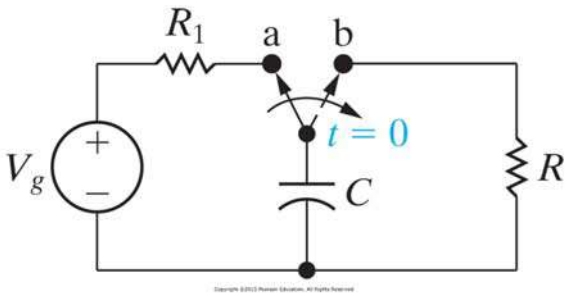

•Switch is at position a for a **long time** and it is switched to position b at $t = 0$.
•Long time=Constant DC voltage is on the circuit
=Capacitor is open circuit ($t < 0$)

First Order RL and RC Natural Response

- Natural Response of RC Circuit (cont.):

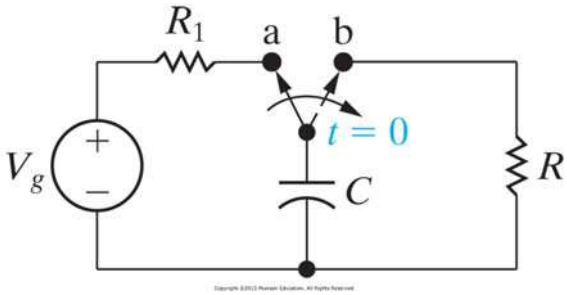

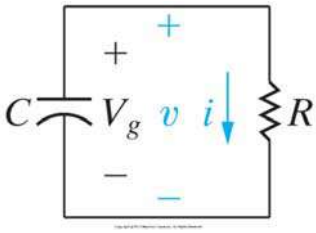

•Switch is at position a for a **long time** and it is switched to position b at $t = 0$.
•Long time=Constant DC voltage is on the circuit
=Capacitor is open circuit ($t < 0$)
•The problem is to find the voltages and currents after the switch is turned to position b ($t \geq 0$).

First Order RL and RC Natural Response

- Natural Response of RC Circuit (cont.):

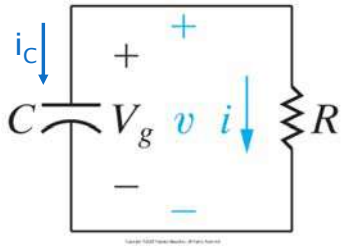

$$KCL: i_C + i = C\frac{dv}{dt} + \frac{v}{R} = 0$$

$$C\frac{dv}{dt} + \frac{v}{R} = 0 \Rightarrow \frac{dv}{v} = -\frac{1}{RC}dt$$

$$\int_{i(t_0)}^{i(t)} \frac{dx}{x} = -\frac{1}{RC}\int_{t_0}^{t} dy \overset{t_0=0}{\Rightarrow} \ln\left(\frac{v(t)}{v(0)}\right) = -\frac{1}{RC}t \Rightarrow \boxed{v(t) = v(0)e^{-t/RC}}$$

First Order RL and RC Natural Response

- Natural Response of RC Circuit (cont.):

•Capacitor voltage will not make a sudden change.

$$v(0^-) = v(0^+) = V_0$$

$$\boxed{v(t) = V_0 e^{-t/RC}, \quad t \geq 0}$$

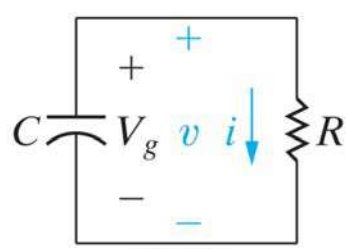

First Order RL and RC Natural Response

- Natural Response of RC Circuit (cont.):

  - Capacitor current can change suddenly

$$i(t) = 0 \qquad t < 0$$

$$i(t) = v/R = \frac{V_0}{R} e^{-t/RC}, \quad t \geq 0^+$$

$$i(0^-) = 0, \; i(0^+) = V_0 / R$$

$$i(0) \Rightarrow \text{ not defined.}$$

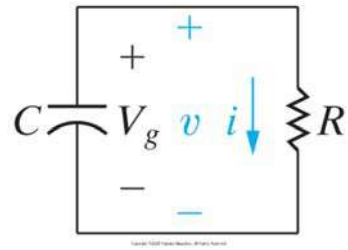

First Order RL and RC Natural Response

- Natural Response of RC Circuit (cont.):

  - Capacitor current can change suddenly

$$i(t) = 0 \qquad t < 0$$

$$i(t) = v/R = \frac{V_0}{R} e^{-t/RC}, \quad t \geq 0^+$$

$$i(0^-) = 0, \; i(0^+) = V_0 / R$$

$$i(0) \Rightarrow \text{ not defined.}$$

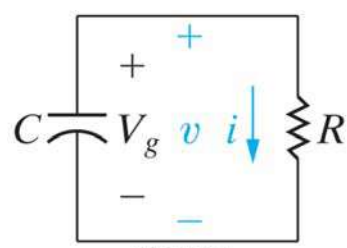

- Power and Energy:

$$p(t) = v(t)i(t) = \frac{V_0^2}{R} e^{-2t/RC}, \quad t \geq 0^+$$

$$w(t) = \int_0^t p(t) = \frac{1}{2} C V_0^2 \left(1 - e^{-2t/RC}\right), \quad t \geq 0$$

First Order RL and RC Natural Response

- Qn. 7: What is $v_C(t)$ for $t \geq 0$?
  What is $v_o(t)$ for $t \geq 0^+$?
  What is $i_o(t)$ for $t \geq 0^+$?
  What is the total dissipated power on 60kΩ resistor?

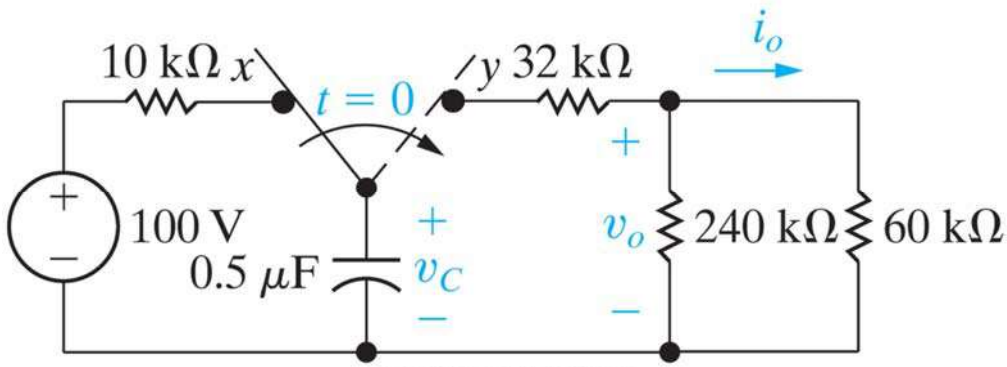

Copyright ©2015 Pearson Education, All Rights Reserved

First Order RL and RC Natural Response

- Qn. 7 (cont.): What is $v_C(t)$ for $t \geq 0$?

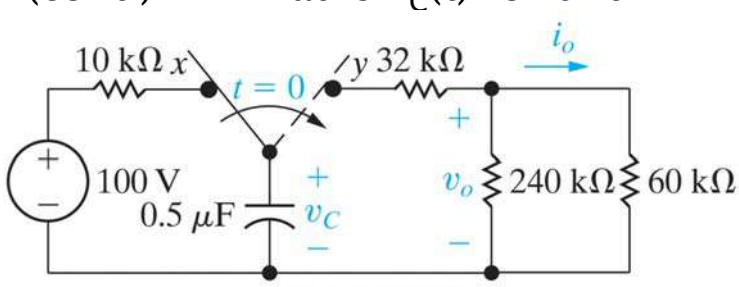

$$v_C(0^-) = v_C(0^+) = 100\text{V}$$

$$\tau = R_{eq}C = (32\text{k}\Omega + 240\text{k}\Omega \| 60\text{k}\Omega)0.5\times10^{-6} = 40\times10^{-3}$$

$$\boxed{v_C(t) = V_0 e^{-t/\tau} = 100e^{-25t}\text{V}, \quad t \geq 0}$$

First Order RL and RC Natural Response

- Qn. 7 (cont.): What is $v_o(t)$ for $t \geq 0$?

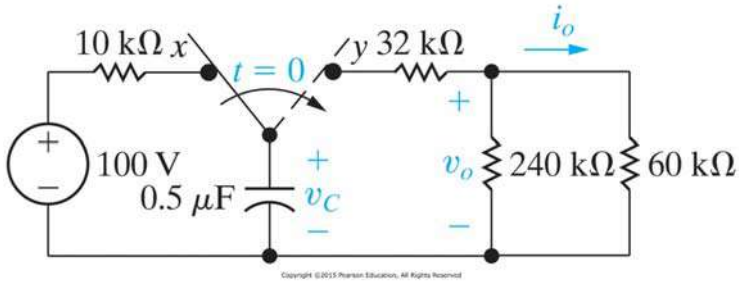

$$v_o(t) = -\frac{240\|60}{32+240\|60} v_C(t) = 60e^{-25t}\text{V}, \quad t \geq 0^+$$

First Order RL and RC Natural Response

- Qn. 7 (cont.): What is $v_o(t)$ for $t \geq 0$?

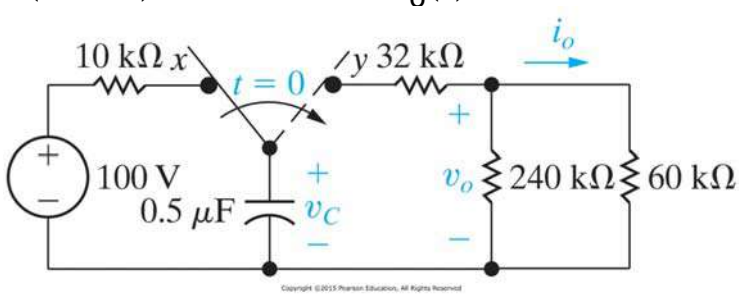

$$v_o(t) = -\frac{240\|60}{32+240\|60} v_C(t) = 60e^{-25t}\text{V}, \quad t \geq 0^+$$

$$v_o(0^-) = 0\text{A}$$

$$\Rightarrow v_o(0^-) \neq v_o(0^+)$$

First Order RL and RC Natural Response

- Qn. 7 (cont.): What is $i_o(t)$ for $t \geq 0$?

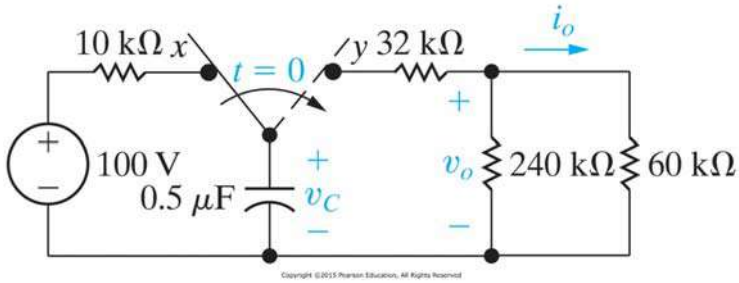

$$v_o(t) = 60e^{-25t}\text{A}, \quad t \geq 0^+$$

$$\boxed{i_o(t) = \frac{v_o(t)}{60 \times 10^3} = e^{-25t}\text{mA}, \quad t \geq 0^+}$$

First Order RL and RC Natural Response

- Qn. 7 (cont.): What is the total dissipated power on 60kΩ resistor?

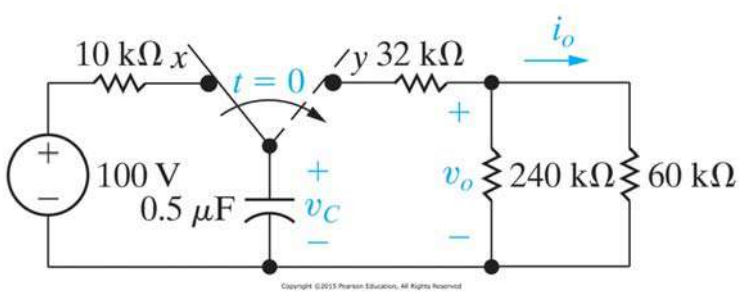

$$p_{60k\Omega}(t) = v_o(t)i_o(t) = 60e^{-50t}\text{mW}, \quad t \geq 0^+$$

$$w_{60k\Omega}(t \to \infty) = \int_{t=0}^{\infty} p_{60k\Omega}(t)dt = \int_{t=0}^{\infty} 60 \times 10^{-3} e^{-50t} dt = 1.2\text{mJ}$$

Course Content

- ~~Circuit Components and Variables, Ohm's Law and Kirchoff's Laws~~
- ~~Circuit Analysis Techniques I - Node Voltage & Mesh Current Methods~~
- ~~Circuit Analysis Techniques II - Thevenin and Norton Equivalent Circuits~~
- ~~First Order RL and RC Circuits~~
- Phasor Concept and AC Analysis of Circuits
- Midterm
- Introduction to Semiconductors
- Diode Applications
- BJT Analysis
- FET Analysis
- Operational Amplifier
- Midterm
- Logic Gates
- Make-up Exams

ELE 296 Basic Electric Circuits and Electronics

- Sinusoidal Steady State Analysis
  - Sinusoidal Source Kaynak
  - Phasor Concept
  - Kirchhoff Laws in the Frequency Domain
  - Source Transformation itFD
  - Thévenin–Norton Equivalent Circuits itFD
  - Node Voltage Method itFD
  - Mesh Current Method itFD

Sinusoidal Steady State

- Sinusoidal Voltage:

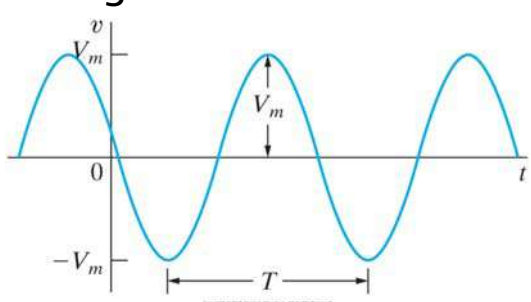

$$v(t) = V_m \cos(\omega t + \phi) \text{ V}$$

- V_m : Amplitude
- ω : angular frequency [rad/s]
- t : time [s]
- ϕ : phase angle [deg]
- $f = \omega / 2\pi$: frequency [Hz]
- $T = 1/f$: period [s]

Sinusoidal Steady State

- A change in phase angle:

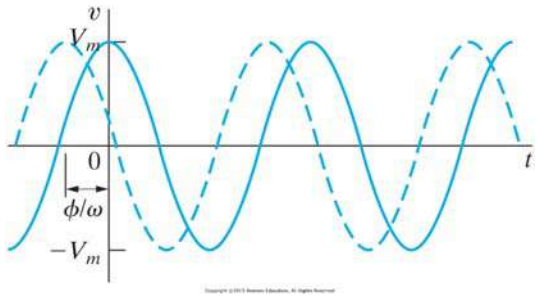

- RMS (Root Mean Square) value:

$$V_{rms} = \sqrt{\frac{1}{T}\int_{t_0}^{t_0+T} v^2(t)dt} = \sqrt{\frac{1}{T}\int_{t_0}^{t_0+T} V_m^2 \cos^2(\omega t+\phi)dt}$$

$$= \frac{V_m}{\sqrt{2}}$$

Sinusoidal Steady State

- Qn. 1: A sinusoidal voltage is given as

$$v=300\cos(120\pi t+30^\circ)$$

Define the period?
Define the frequency?
What is v for t=2.778ms?
What is the rms value of v?
Define v as a sine function.

Sinusoidal Steady State

- Qn. 1 (cont.): $v = 300\cos(120\pi t + 30^\circ)$

$$\omega = 120\pi = \frac{2\pi}{T} \qquad f = \frac{1}{T}$$

$$\Rightarrow T = 16.667\,\text{ms} \qquad \Rightarrow f = 60\,\text{Hz}$$

$$v = 300\cos(120\pi t + 30^\circ) = 300\cos\left(120\pi t \times \frac{180}{\pi} + 30^\circ\right)$$

$$v = 300\cos(21600t + 30^\circ)$$

$$\Rightarrow v\big|_{t=2.778ms} = 300\cos(60^\circ + 30^\circ) = 0\text{V}$$

Sinusoidal Steady State

- Qn. 1 (cont.): $v = 300\cos(120\pi t + 30^\circ)$

$$V_{rms} = \frac{V_m}{\sqrt{2}}$$

$$\Rightarrow V_{rms} = \frac{300}{\sqrt{2}} = 212.13\text{V}$$

$$\sin(x) = \cos(x - 90^\circ)$$
$$\cos(x) = \sin(90^\circ - x)$$
$$\sin(-x) = -\sin(x)$$
$$\cos(-x) = \cos(x)$$

$$v = 300\cos(120\pi t + 30^\circ) = 300\cos(-120\pi t - 30^\circ)$$
$$= \sin(90^\circ - (-120\pi t - 30^\circ))$$
$$\Rightarrow v = \sin(120\pi t + 120^\circ)$$

Sinusoidal Steady State

- Sinusoidal Response:

$$V_m \cos(\omega t + \phi) = v_s$$

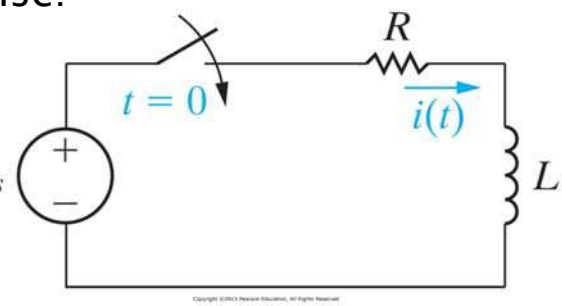

$$KVL: -v_s + v_R + v_L = -V_m \cos(\omega t + \phi) + iR + L\frac{di}{dt} = 0$$

$$i = \frac{-V_m}{\sqrt{R^2 + \omega^2 L^2}} \cos(\phi - \theta) e^{-(R/L)t} + \frac{V_m}{\sqrt{R^2 + \omega^2 L^2}} \cos(\omega t + \phi - \theta), \quad \theta = \frac{\omega L}{R}$$

Sinusoidal Steady State

- Sinusoidal Response :

$$V_m \cos(\omega t + \phi) = v_s$$

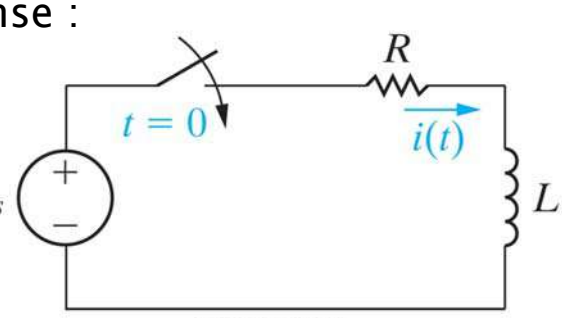

Transient Response

Steady-State Response

$$i = \frac{-V_m}{\sqrt{R^2 + \omega^2 L^2}} \cos(\phi - \theta) e^{-(R/L)t} + \frac{V_m}{\sqrt{R^2 + \omega^2 L^2}} \cos(\omega t + \phi - \theta), \quad \theta = \frac{\omega L}{R}$$

Sinusoidal Steady State

- Steady-State Response:

  - It is a sinusoidal function,

  - The frequency of the response and the source are the same.

  - The maximum amplitude of the response and the source are generally different.

  - The phase of the response and the source are generally different.

$$v_s = V_m \cos(\omega t + \phi) \qquad i_{ss} = \frac{V_m}{\sqrt{R^2 + \omega^2 L^2}} \cos(\omega t + \phi - \theta)$$

Sinusoidal Steady State

- Phasor:

  - It is a complex number that carries the amplitude and phase information.

  - Euler Equation:

$$e^{\pm j\theta} = \cos(\theta) \pm j\sin(\theta) \quad \begin{cases} \cos\theta = \mathrm{Re}\{e^{j\theta}\} \\ \sin\theta = \mathrm{Im}\{e^{j\theta}\} \end{cases}$$

  - Sinusoidal Source:

$$\begin{aligned} v &= V_m \cos(\omega t + \phi) \\ &= V_m \mathrm{Re}\{e^{j(\omega t + \phi)}\} = V_m \mathrm{Re}\{e^{j\omega t} e^{j\phi}\} \\ &= \mathrm{Re}\{V_m e^{j\phi} e^{j\omega t}\} \end{aligned}$$

Phasor representation including the amplitude and phase!!!

Sinusoidal Steady State

- Phasor (cont.):
  - Phasor Transformation:

$$\mathbf{V} = V_m e^{j\phi} = V_m \angle \phi = V_m \cos\phi + jV_m \sin\phi$$
$$= \mathbf{P}\{V_m \cos(\omega t + \phi)\}$$

  - Phasor transformation transforms the function from time domain to complex number domain.
  - Also called **Frequency Domain.**
  - Inverse Phasor Transform:

$$\mathbf{P}^{-1}\{V_m e^{j\phi}\} = V_m \cos(\omega t + \phi)$$

ω can not be known

Sinusoidal Steady State

- Qn. 2: $y_1 = 20\cos(\omega t - 30^\circ), y_2 = 40\cos(\omega t + 60^\circ)$

  define $y_1 + y_2$.

$$y_1 = 20\cos(\omega t - 30^\circ) = 20\cos\omega t \cos 30^\circ + 20\sin\omega t \sin 30^\circ$$
$$y_2 = 40\cos(\omega t + 60^\circ) = 40\cos\omega t \cos 60^\circ - 40\sin\omega t \sin 60^\circ$$

$$y_1 + y_2 = \cos\omega t(20\cos 30^\circ + 40\cos 60^\circ) + \sin\omega t(20\sin 30^\circ - 40\sin 60^\circ)$$
$$= 37.32\cos\omega t - 24.64\sin\omega t$$

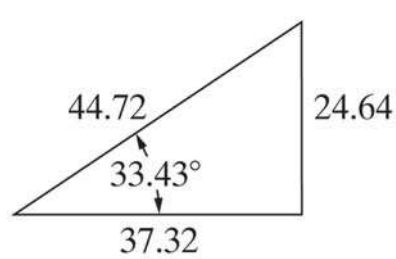

Sinusoidal Steady State

- Qn. 2 (cont.):

$$y_1 + y_2 = 44.72\left(\frac{37.32}{44.72}\cos\omega t - \frac{24.64}{44.72}\sin\omega t\right)$$
$$= 44.72\left(\cos 33.43^\circ \cos\omega t - \sin 33.43^\circ \sin\omega t\right)$$

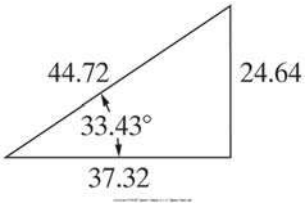

$$\boxed{y_1 + y_2 = 44.72\cos\left(\omega t + 33.43^\circ\right)}$$

Sinusoidal Steady State

- Qn. 2 (cont.): $y_1 = 20\cos\left(\omega t - 30^\circ\right), y_2 = 40\cos\left(\omega t + 60^\circ\right)$
  define $y_1 + y_2$ using phasor consept.

$$y_1 = 20\cos\left(\omega t - 30^\circ\right) \Rightarrow \mathbf{Y}_1 = 20\angle -30^\circ$$
$$y_2 = 40\cos\left(\omega t + 60^\circ\right) \Rightarrow \mathbf{Y}_2 = 40\angle 60^\circ$$

$$\mathbf{Y}_1 + \mathbf{Y}_2 = 20\angle -30^\circ + 40\angle 60^\circ = 20e^{-j30^\circ} + 40e^{j60^\circ}$$
$$= (17.32 - j10) + (20 + j34.64)$$
$$= 37.32 + j24.64$$
$$= 44.72\angle 33.43^\circ$$

$$\boxed{\begin{aligned} y_1 + y_2 &= \mathbf{P}^{-1}\left\{44.72\angle 33.43^\circ\right\} = \mathrm{Re}\left\{44.72e^{j33.43^\circ}e^{j\omega t}\right\} \\ &= 44.72\cos\left(\omega t + 33.43^\circ\right) \end{aligned}}$$

Sinusoidal Steady State

- V–I Relationship for a Resistor:

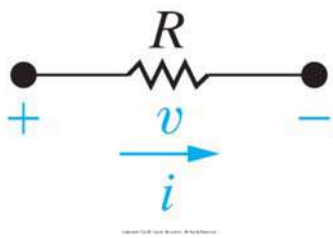

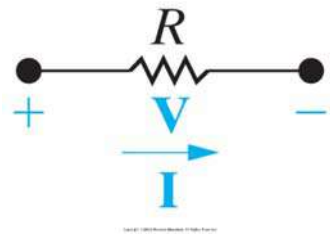

$$i = I_m \cos(\omega t + \phi_i)$$
$$v = RI_m \cos(\omega t + \phi_i)$$

$$\mathbf{I} = I_m e^{j\phi_i} = I_m \angle \phi_i$$
$$\mathbf{V} = RI_m e^{j\phi_i} = RI_m \angle \phi_i$$

Sinusoidal Steady State

- V–I Relationship for a Resistor:

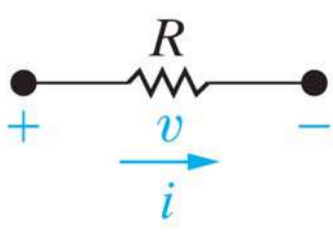

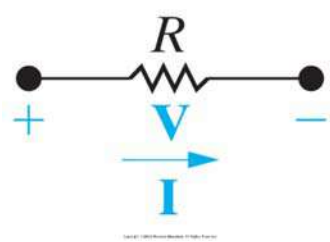

$$v = Ri$$
$$i = I_m \cos(\omega t + \phi_i)$$
$$v = RI_m \cos(\omega t + \phi_i)$$

$$\mathbf{I} = I_m e^{j\phi_i} = I_m \angle \phi_i$$
$$\mathbf{V} = RI_m e^{j\phi_i} = RI_m \angle \phi_i$$
$$\boxed{\mathbf{V} = R\mathbf{I}}$$

- The voltage and current are called in-phase since the resistor does not cause a phase difference.

Sinusoidal Steady State

- V–I Relationship for a Resistor (cont.):

$$\boxed{\mathbf{V} = R\mathbf{I}}$$

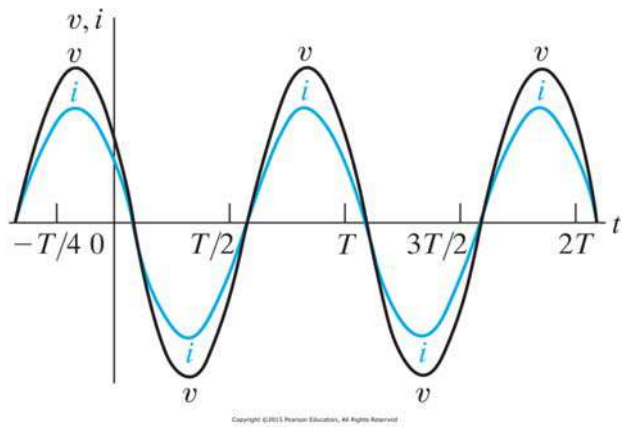

- The resistor does not cause a phase difference.

Sinusoidal Steady State

- V–I Relationship for an Inductor:

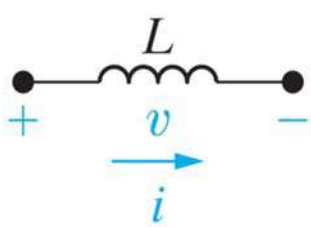

Copyright ©2015 Pearson Education, All Rights Reserved

$$i = I_m \cos(\omega t + \phi_i)$$

$$v = L\frac{di}{dt} = -\omega L I_m \sin(\omega t + \phi_i)$$

$$= -\omega L I_m \cos(\omega t + \phi_i - 90^\circ)$$

$$\mathbf{I} = I_m e^{j\phi_i} = I_m \angle \phi_i$$

$$\mathbf{V} = -\omega L I_m e^{j(\phi_i - 90^\circ)} = -\omega L I_m e^{j\phi_i} e^{-j90^\circ}$$

$$= j\omega L I_m e^{j\phi_i} = j\omega L \mathbf{I} = \omega L I_m \angle(\phi_i + 90^\circ)$$

Sinusoidal Steady State

- V–I Relationship for an Inductor:

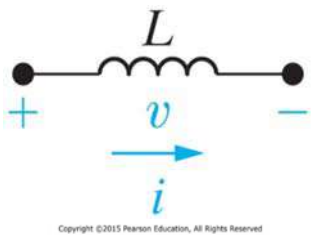

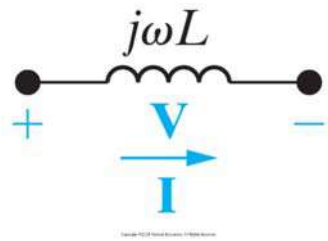

$$\boxed{\mathbf{V} = j\omega L\mathbf{I}}$$

$$i = I_m \cos(\omega t + \phi_i)$$

$$v = L\frac{di}{dt} = -\omega L I_m \sin(\omega t + \phi_i)$$

$$= -\omega L I_m \cos(\omega t + \phi_i - 90^\circ)$$

$$\mathbf{I} = I_m e^{j\phi_i} = I_m \angle \phi_i$$

$$\mathbf{V} = -\omega L I_m e^{j(\phi_i - 90^\circ)} = -\omega L I_m e^{j\phi_i} e^{-j90^\circ}$$

$$= j\omega L I_m e^{j\phi_i} = j\omega L\mathbf{I} = \omega L I_m \angle(\phi_i + 90^\circ)$$

- Voltage leads current by 90°.

Sinusoidal Steady State

- V–I Relationship for an Inductor (cont.):

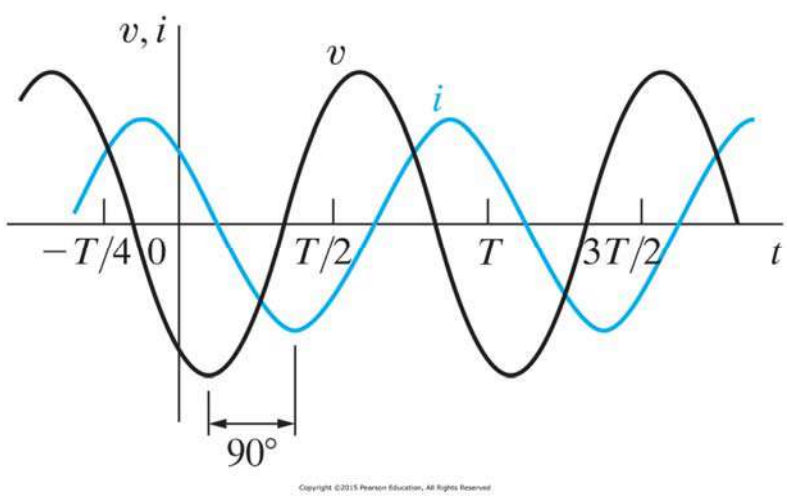

- Voltage leads current by 90°.

Sinusoidal Steady State

- V–I Relationship for a Capacitor:

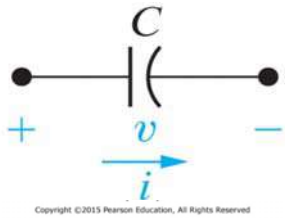

$$v = V_m \cos(\omega t + \phi_v)$$

$$i = C\frac{dv}{dt} = -\omega C V_m \sin(\omega t + \phi_v)$$

$$= -\omega C V_m \cos(\omega t + \phi_v - 90^\circ)$$

$$\mathbf{V} = V_m e^{j\phi_v} = V_m \angle \phi_v$$

$$\mathbf{I} = -\omega C V_m e^{j(\phi_v - 90^\circ)} = -\omega C V_m e^{j\phi_v} e^{-j90^\circ}$$

$$= j\omega C V_m e^{j\phi_i} = j\omega C \mathbf{V} = \omega C V_m \angle(\phi_v + 90^\circ)$$

$$\mathbf{V} = \frac{1}{j\omega C}\mathbf{I} = -\frac{j}{\omega C}\mathbf{I} = \frac{1}{\omega C} I_m \angle(\phi_i - 90^\circ)$$

Sinusoidal Steady State

- V–I Relationship for a Capacitor :

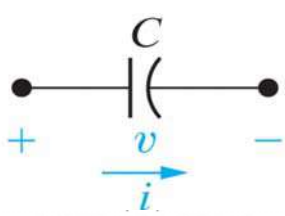

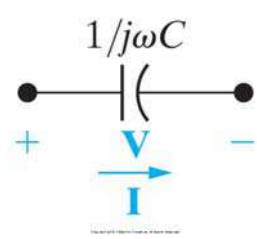

$$\boxed{\mathbf{I} = j\omega C \mathbf{V}}$$

$$\boxed{\mathbf{V} = \frac{1}{j\omega C}\mathbf{I}}$$

$$v = V_m \cos(\omega t + \phi_v)$$

$$i = C\frac{dv}{dt} = -\omega C V_m \sin(\omega t + \phi_v)$$

$$= -\omega C V_m \cos(\omega t + \phi_v - 90^\circ)$$

$$\mathbf{V} = V_m e^{j\phi_v} = V_m \angle \phi_v$$

$$\mathbf{I} = -\omega C V_m e^{j(\phi_v - 90^\circ)} = -\omega C V_m e^{j\phi_v} e^{-j90^\circ}$$

$$= j\omega C V_m e^{j\phi_i} = j\omega C \mathbf{V} = \omega C V_m \angle(\phi_v + 90^\circ)$$

$$\mathbf{V} = \frac{1}{j\omega C}\mathbf{I} = -\frac{j}{\omega C}\mathbf{I} = \frac{1}{\omega C} I_m \angle(\phi_i - 90^\circ)$$

- Current leads voltage by 90°.

Sinusoidal Steady State

- V–I Relationship for a Capacitor (cont.):

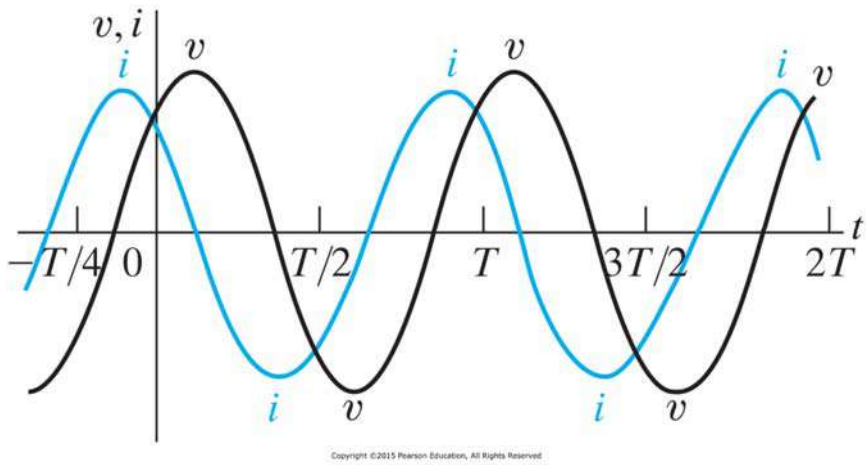

- Current leads voltage by 90°.

Sinusoidal Steady State

- Impedance and Reactance:

$$\mathbf{V} = R\mathbf{I} \qquad \mathbf{V} = j\omega L\mathbf{I} \qquad \mathbf{V} = \frac{1}{j\omega C}\mathbf{I}$$

$$\boxed{\mathbf{V} = Z\mathbf{I}}$$

•Z is the impedance of the circuit element.
•Unit for impedance is Ohm.
•It is a complex number but NOT A PHASOR.
•Impedance is defined in the frequency domain.
•The imaginary part of the impedance is called Reactance.

Sinusoidal Steady State

- Qn. 3: The current on a 20mH inductor is given as 10cos(10000t+30°) mA.

  What is the reactance of the inductor?
  What is the impedance of the inductor?
  What is the phasor voltage **V** on the inductor?
  Find the steady state voltage v(t) on the inductor.

Sinusoidal Steady State

- Qn. 3 (cont.): $i(t) = 10\cos(10000t + 30^\circ)\text{mA}$

$$\mathbf{V} = j\omega L\mathbf{I}$$

$$\Rightarrow \text{Reactance}: \omega L = 10000 \times 20 \times 10^{-3} = 200\Omega$$

$$\Rightarrow \text{Impedance}: Z = j\omega L = j10000 \times 20 \times 10^{-3} = j200\Omega$$

$$\Rightarrow \mathbf{V} = j\omega L\mathbf{I} = j200 \times 10 \times 10^{-3} \angle 30^\circ = 2\angle 120^\circ \text{V}$$

$$\Rightarrow v(t) = 2\cos(10000t + 120^\circ)\text{V}$$

Sinusoidal Steady State

- Qn. 4: The voltage on a 5μF capacitor is given as 30cos(4000t+25°) V.

  What is the reactance of the capacitor?
  What is the impedance of the capacitor?
  What is the phasor current **I** on the capacitor?
  Find the steady state current i(t) on the capacitor.

Sinusoidal Steady State

- Qn. 4 (cont.): $v(t) = 30\cos(4000t + 25^\circ)\text{V}$

$$\mathbf{V} = -\frac{j}{\omega C}\mathbf{I} \Leftrightarrow \mathbf{I} = j\omega C\mathbf{V}$$

$$\Rightarrow \text{Reactance}: -\frac{1}{\omega C} = -\frac{1}{4000 \times 5 \times 10^{-6}} = -50\Omega$$

$$\Rightarrow \text{Impedance}: Z = -\frac{j}{\omega C} = -\frac{j}{4000 \times 5 \times 10^{-6}} = -j50\Omega$$

$$\Rightarrow \mathbf{I} = j\omega C\mathbf{V} = j0.02 \times 30\angle 25^\circ = 0.6\angle 115^\circ \text{A}$$

$$\Rightarrow i(t) = 0.6\cos(4000t + 115^\circ)\text{A}$$

Sinusoidal Steady State

- Kirchoff Laws in Frequency Domain:
  Kirchoff Voltage Law

$$v_1 + v_2 + \cdots + v_n = 0$$

$$V_{m_1}\cos(\omega t + \phi_1) + V_{m_2}\cos(\omega t + \phi_2) + \cdots + V_{m_n}\cos(\omega t + \phi_n) = 0$$

$$\mathrm{Re}\{V_{m_1}e^{j\phi_1}e^{j\omega t}\} + \mathrm{Re}\{V_{m_2}e^{j\phi_2}e^{j\omega t}\} + \cdots + \mathrm{Re}\{V_{m_n}e^{j\phi_n}e^{j\omega t}\} = 0$$

$$\mathrm{Re}\{V_{m_1}e^{j\phi_1}e^{j\omega t} + V_{m_2}e^{j\phi_2}e^{j\omega t} + \cdots + V_{m_n}e^{j\phi_n}e^{j\omega t}\} = 0$$

$$\mathrm{Re}\{(V_{m_1}e^{j\phi_1} + V_{m_2}e^{j\phi_2} + \cdots + V_{m_n}e^{j\phi_n})e^{j\omega t}\} = 0$$

$$\mathrm{Re}\{(\mathbf{V}_1 + \mathbf{V}_2 + \cdots + \mathbf{V}_n)e^{j\omega t}\} = 0$$

$$\boxed{\mathbf{V}_1 + \mathbf{V}_2 + \cdots + \mathbf{V}_n = 0}$$

Sinusoidal Steady State

- Kirchoff Laws in Frequency Domain:
  Kirchoff Current Law

$$i_1 + i_2 + \cdots + i_n = 0$$

$$I_{m_1}\cos(\omega t + \phi_1) + I_{m_2}\cos(\omega t + \phi_2) + \cdots + I_{m_n}\cos(\omega t + \phi_n) = 0$$

$$\mathrm{Re}\{I_{m_1}e^{j\phi_1}e^{j\omega t}\} + \mathrm{Re}\{I_{m_2}e^{j\phi_2}e^{j\omega t}\} + \cdots + \mathrm{Re}\{I_{m_n}e^{j\phi_n}e^{j\omega t}\} = 0$$

$$\mathrm{Re}\{I_{m_1}e^{j\phi_1}e^{j\omega t} + I_{m_2}e^{j\phi_2}e^{j\omega t} + \cdots + I_{m_n}e^{j\phi_n}e^{j\omega t}\} = 0$$

$$\mathrm{Re}\{(I_{m_1}e^{j\phi_1} + I_{m_2}e^{j\phi_2} + \cdots + I_{m_n}e^{j\phi_n})e^{j\omega t}\} = 0$$

$$\mathrm{Re}\{(\mathbf{I}_1 + \mathbf{I}_2 + \cdots + \mathbf{I}_n)e^{j\omega t}\} = 0$$

$$\boxed{\mathbf{I}_1 + \mathbf{I}_2 + \cdots + \mathbf{I}_n = 0}$$

Sinusoidal Steady State

- Series and Parallel Impedances:

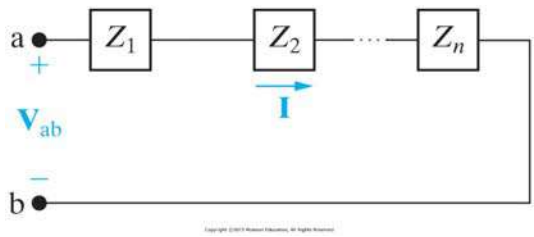

$$KVL: \mathbf{V}_{ab} = Z_1\mathbf{I} + Z_2\mathbf{I} + \cdots + Z_n\mathbf{I}$$
$$= \left(Z_1 + Z_2 + \cdots + Z_n\right)\mathbf{I}$$
$$Z_{ab} = \frac{\mathbf{V}_{ab}}{\mathbf{I}} = Z_1 + Z_2 + \cdots + Z_n$$

Seri Empedanslar toplanır!

Sinusoidal Steady State

- Series and Parallel Impedances (cont.):

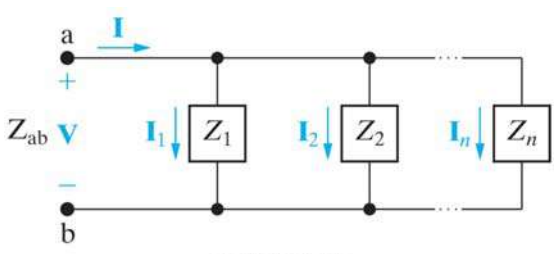

$$KCL: \mathbf{I} = \frac{\mathbf{V}}{Z_1} + \frac{\mathbf{V}}{Z_2} + \cdots + \frac{\mathbf{V}}{Z_3}$$
$$= \left(\frac{1}{Z_1} + \frac{1}{Z_2} + \cdots + \frac{1}{Z_3}\right)\mathbf{V}$$

$$\frac{1}{Z_{ab}} = \frac{\mathbf{I}}{\mathbf{V}} = \frac{1}{Z_1} + \frac{1}{Z_2} + \cdots + \frac{1}{Z_3}$$

Sinusoidal Steady State

- Qn. 5: $v_s = 750\cos(5000t + 30°)$ V.

  Draw the circuit in frequency domain.
  Find the steady state current i(t) using phasor concept.

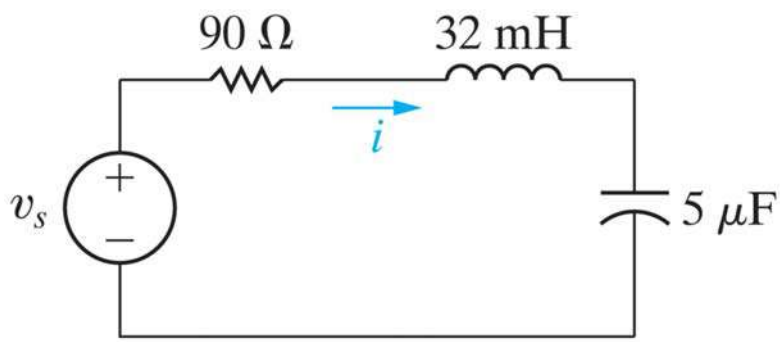

Copyright ©2015 Pearson Education, All Rights Reserved

Sinusoidal Steady State

- Qn. 5 (cont.): $v_s(t) = 750\cos(5000t + 30^\circ)\text{V} \Rightarrow \mathbf{V} = 750\angle 30^\circ\,\text{V}$

$$Z_R = R = 90\Omega$$

$$Z_L = j\omega L = j5000 \times 32 \times 10^{-3} = j160\Omega$$

$$Z_C = -\frac{j}{\omega C} = -\frac{j}{5000 \times 5 \times 10^{-6}} = -j40\Omega$$

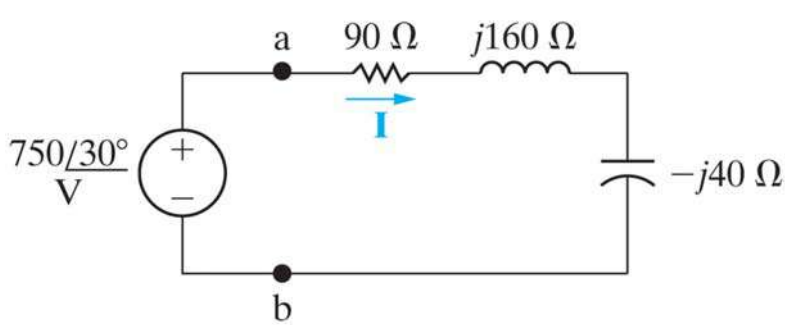

Copyright ©2015 Pearson Education, All Rights Reserved

Sinusoidal Steady State

- Qn. 5 (cont.):

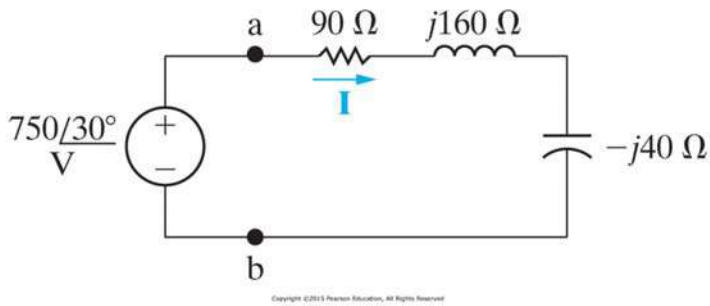

$$KVL: \mathbf{V} = Z_1\mathbf{I} + Z_2\mathbf{I} + Z_3\mathbf{I} = (90 + j160 - j40)\mathbf{I}$$

$$\mathbf{V} = (90 + j120)\mathbf{I}$$

$$750\angle 30^\circ = 150\angle 53.13^\circ \mathbf{I}$$

$$\Rightarrow \mathbf{I} = \frac{750\angle 30^\circ}{150\angle 53.13^\circ} = 5\angle -23.13^\circ \text{ A} \qquad \boxed{\Rightarrow i(t) = 5\cos(5000t - 23.13^\circ)\text{A}}$$

Sinusoidal Steady State

- Source Transformation:

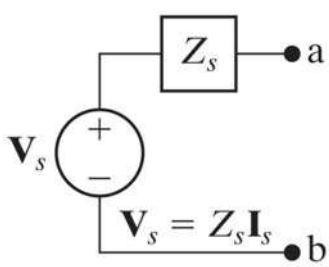

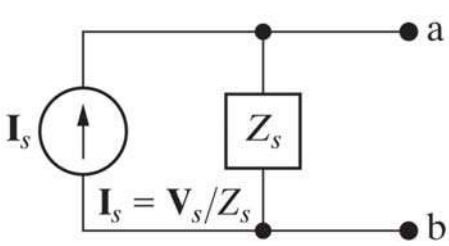

Copyright ©2015 Pearson Education, All Rights Reserved

The circuits on the left are equivalent in time domain.

It can also be shown that they are equivalent in the frequency domain also.

The voltage and current in the terminals ab must be equal in order to say that these circuits are equivalent!!!

Sinusoidal Steady State

- Source Transformation (cont.):

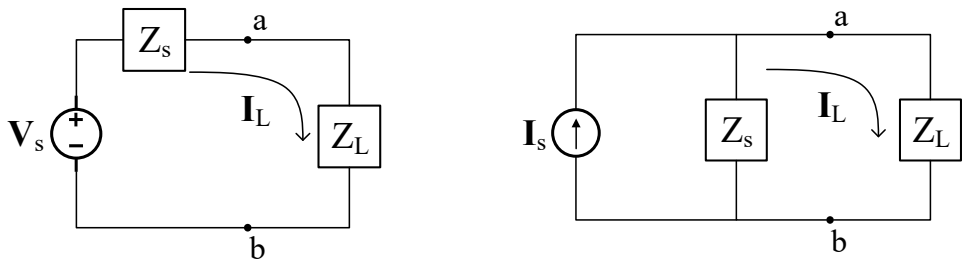

$$\mathbf{I}_L = \frac{\mathbf{V}_S}{Z_s + Z_L} \qquad \mathbf{I}_L = \frac{Z_s}{Z_s + Z_L}\mathbf{I}_S$$

$$\mathbf{I}_L = \frac{\mathbf{V}_S}{Z_s + Z_L} = \frac{Z_s}{Z_s + Z_L}\mathbf{I}_S$$

$$\boxed{\mathbf{I}_S = \frac{\mathbf{V}_S}{Z_s}}$$

Sinusoidal Steady State

- Qn. 6: Find V_0 using source transformation.

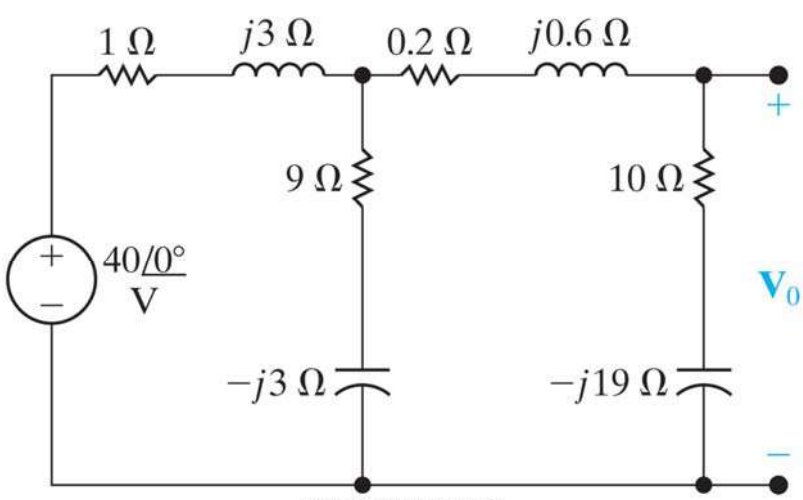

Sinusoidal Steady State

- Qn. 6 (cont.):

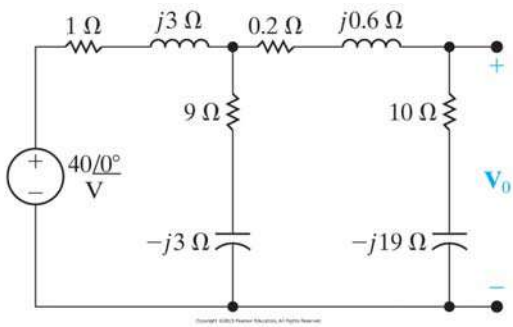

$$\mathbf{I} = \frac{40\angle 0^\circ}{1+j3} = \frac{40}{(1+j3)(1-j3)}(1-j3) = 4 - j12\text{A}$$

Sinusoidal Steady State

- Qn. 6 (cont.):

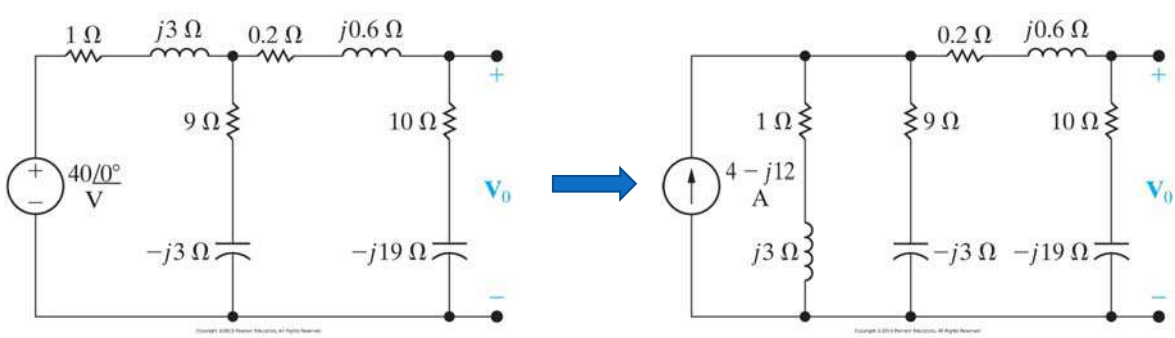

$$\mathbf{I} = \frac{40\angle 0^\circ}{1+j3} = \frac{40}{(1+j3)(1-j3)}(1-j3) = 4 - j12\text{A}$$

Sinusoidal Steady State

- Qn. 6 (cont.):

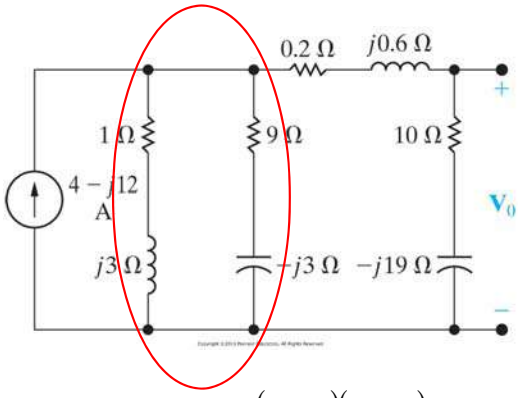

$$(1+j3)\|(9-j3)=\frac{(1+j3)(9-j3)}{10}=1.8+j2.4\Omega$$

$$\mathbf{V}=(4-j12\text{A})(1.8+j2.4\Omega)=36-12j\text{V}$$

Sinusoidal Steady State

- Qn. 6 (cont.):

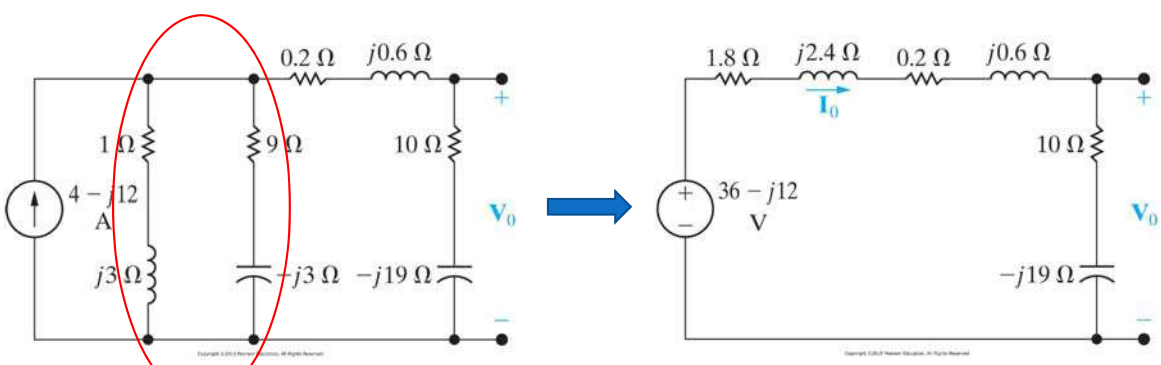

$$(1+j3)\|(9-j3)=\frac{(1+j3)(9-j3)}{10}=1.8+j2.4\Omega$$

$$\mathbf{V}=(4-j12\text{A})(1.8+j2.4\Omega)=36-12j\text{V}$$

$$\boxed{\begin{aligned}\mathbf{V}_0&=(36-12j\text{V})\frac{10-j19\Omega}{12-j16\Omega}\\&=36.12-18.84\text{V}\\&\equiv 40.74\angle-27.55^\circ\end{aligned}}$$

Sinusoidal Steady State

- Thévenin–Norton Equivalent Circuits:

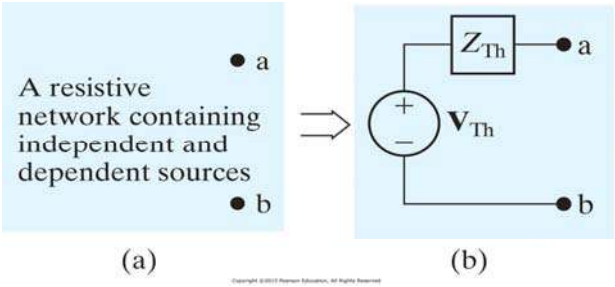

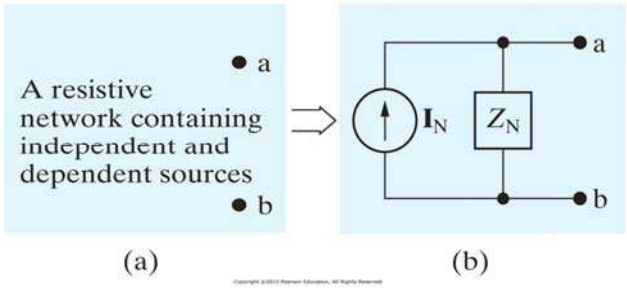

•1st Step: Find open circuit voltage (V_{th}).

•2nd Step: Find short circuit current (I_{sc}).

•3rd Step: $R_{th} = V_{th} / I_{sc}$

•4th Step (Optional): Find Norton equivalent using source transformation.

Sinusoidal Steady State

- Qn. 7: Find Thévenin equivalent w.r.t. terminals ab.

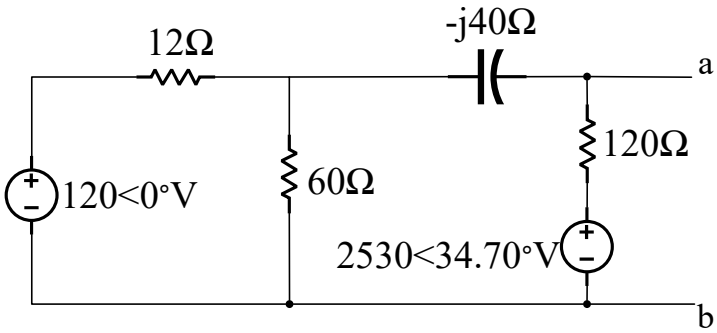

Sinusoidal Steady State

- Qn. 7 (cont.):

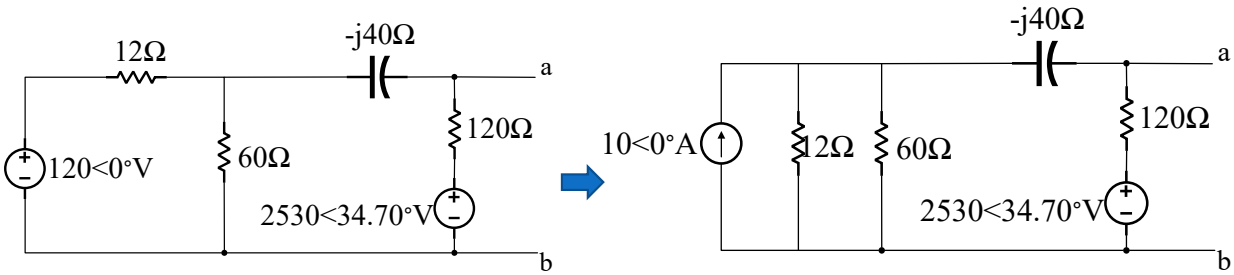

Sinusoidal Steady State

- Qn. 7 (cont.):

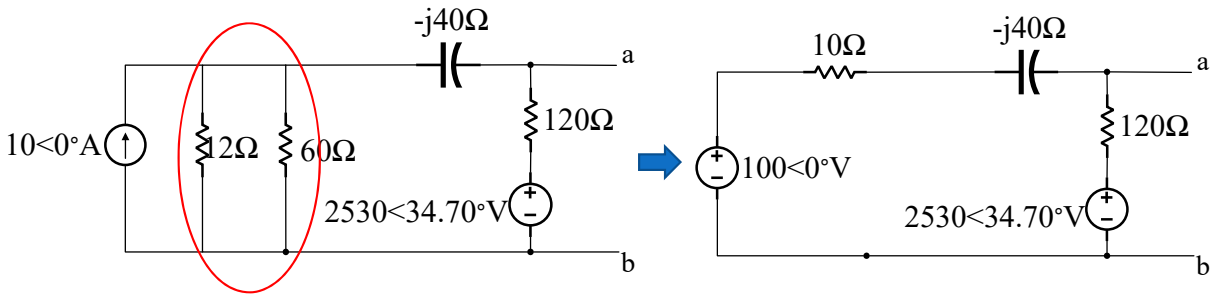

$12 \| 60 = 10\Omega$

$$\mathbf{I} = \frac{100\angle 0^\circ - 2530\angle 34.70^\circ}{130 - j40} = -10.8 - j14.4\text{A}$$

$$\boxed{\begin{aligned}\mathbf{V}_{ab} &= \mathbf{V}_{Th} = 2350\angle 34.70^\circ + 120(-10.8 - j14.4) \\ &= 835.22\angle -20.17^\circ\end{aligned}}$$

Sinusoidal Steady State

- Qn. 7 (cont.):

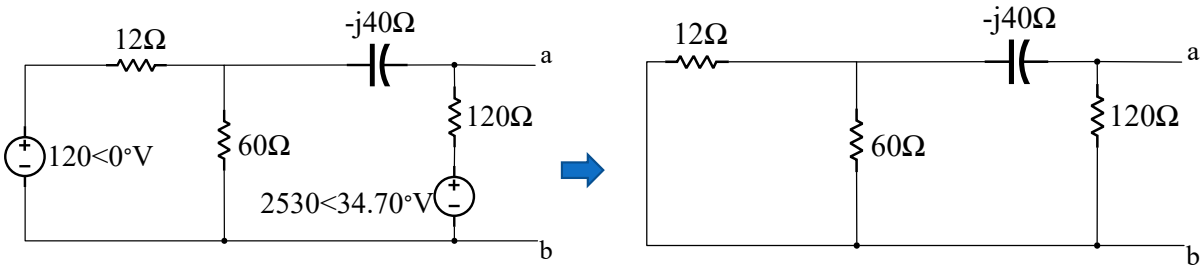

$$Z_{ab} = Z_{Th} = \left(12 \| 60 + j40\right) \| 120 = 18.81 - j31.14\Omega$$

Sinusoidal Steady State

- Node Voltage Method:

1. Define essential nodes
2. Pick a reference node
3. Give names to remaining essential nodes
4. Solve KCL for each essential node
5. Check the power balanca

Sinusoidal Steady State

- Qn. 8: Find the phasor V_g using node voltage method.

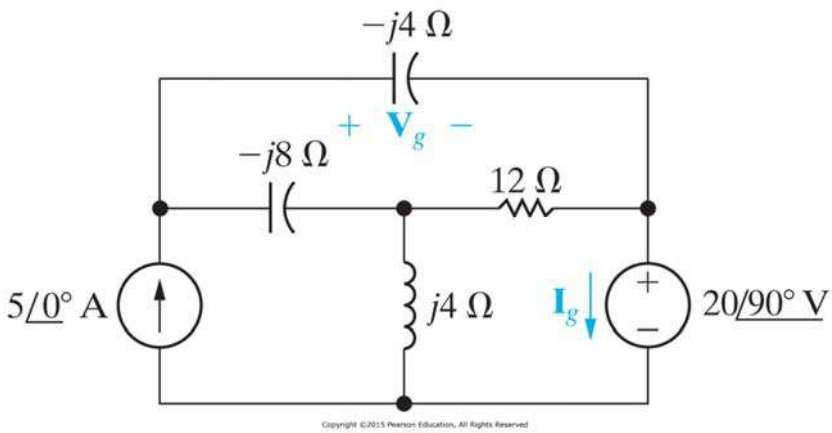

Sinusoidal Steady State

- Qn. 8 (cont.):

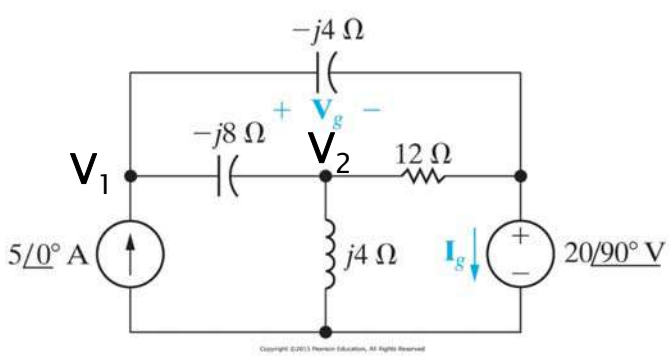

$$-5\angle 0^\circ + \frac{\mathbf{V}_1 - \mathbf{V}_2}{-j8} + \frac{\mathbf{V}_1 - 20\angle 90^\circ}{-j4} = 0$$

$$\frac{\mathbf{V}_2 - \mathbf{V}_1}{-j8} + \frac{\mathbf{V}_2}{j4} + \frac{\mathbf{V}_2 - 20\angle 90^\circ}{12} = 0$$

Sinusoidal Steady State

- Qn. 8 (cont.):

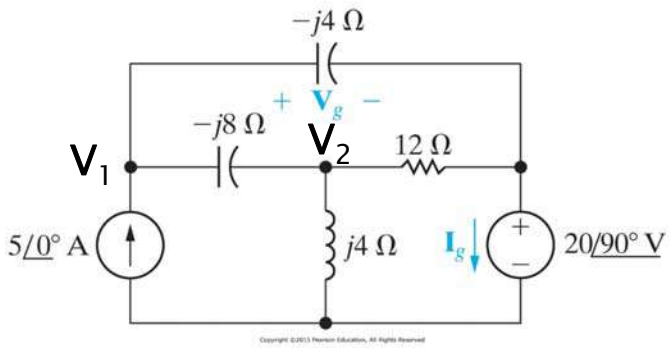

$$-5\angle 0^\circ + \frac{\mathbf{V}_1 - \mathbf{V}_2}{-j8} + \frac{\mathbf{V}_1 - 20\angle 90^\circ}{-j4} = 0$$

$$\frac{\mathbf{V}_2 - \mathbf{V}_1}{-j8} + \frac{\mathbf{V}_2}{j4} + \frac{\mathbf{V}_2 - 20\angle 90^\circ}{12} = 0$$

$$\Rightarrow \quad \mathbf{V}_1 = -2.67 + j1.33\text{V} \qquad \mathbf{V}_2 = -8 + j4\text{V}$$

Sinusoidal Steady State

- Qn. 8 (cont.):

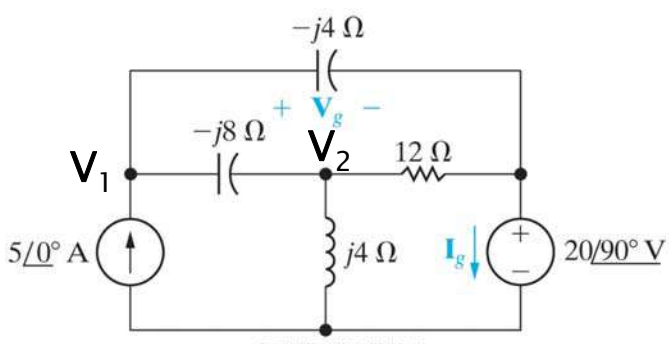

$$-5\angle 0^\circ + \frac{\mathbf{V}_1 - \mathbf{V}_2}{-j8} + \frac{\mathbf{V}_1 - 20\angle 90^\circ}{-j4} = 0$$

$$\frac{\mathbf{V}_2 - \mathbf{V}_1}{-j8} + \frac{\mathbf{V}_2}{j4} + \frac{\mathbf{V}_2 - 20\angle 90^\circ}{12} = 0$$

$$\Rightarrow \quad \mathbf{V}_1 = -2.67 + j1.33\text{V} \qquad \mathbf{V}_2 = -8 + j4\text{V}$$

$$\boxed{\begin{aligned}\mathbf{V}_g &= \mathbf{V}_1 - 20\angle 90^\circ \\ &= -2.67 - j18.67\text{V} \\ &= 18.86\angle -98.14^\circ\,\text{V}\end{aligned}}$$

why 98.14 but not 81.86 degrees?

Sinusoidal Steady State

- Mesh Current Method:
    1. Define meshes
    2. Define currents to each mesh (son't forget to define the directions)
    3. Solve KVL equations for each mesh
    4. Check the power balance

Sinusoidal Steady State

- Qn. 9: Find the steady state value $v_o(t)$ using mesh current method.

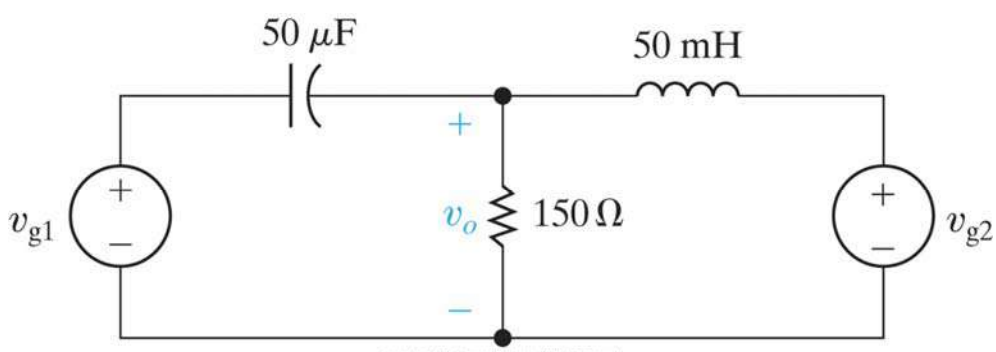

$$v_{g1}(t) = 25\sin(400t + 143.13^\circ)\text{V}$$
$$v_{g2}(t) = 18.03\cos(400t + 33.69^\circ)\text{V}$$

Sinusoidal Steady State

- Qn. 9 (cont.):

$$v_{g1}(t) = 25\sin(400t + 143.13^\circ)\text{V} \qquad \mathbf{V}_{g1} = 25\angle 53.13^\circ\,\text{V}$$
$$v_{g2}(t) = 18.03\cos(400t + 33.69^\circ)\text{V} \qquad \mathbf{V}_{g2} = 18.03\angle 33.69^\circ\,\text{V}$$

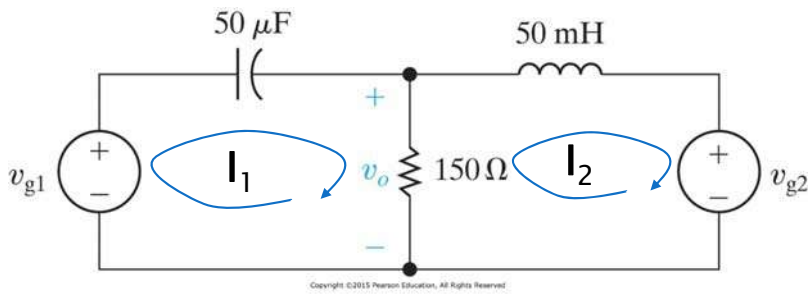

$$-25\angle 53.13^\circ + (-j50)\mathbf{I}_1 + 150(\mathbf{I}_1 - \mathbf{I}_2) = 0$$
$$18.03\angle 33.69^\circ + 150(\mathbf{I}_2 - \mathbf{I}_1) + j20\mathbf{I}_2 = 0$$

Sinusoidal Steady State

- Qn. 9 (cont.):

$$v_{g1}(t) = 25\sin(400t + 143.13^\circ)\text{V} \qquad \mathbf{V}_{g1} = 25\angle 53.13^\circ\,\text{V}$$
$$v_{g2}(t) = 18.03\cos(400t + 33.69^\circ)\text{V} \qquad \mathbf{V}_{g2} = 18.03\angle 33.69^\circ\,\text{V}$$

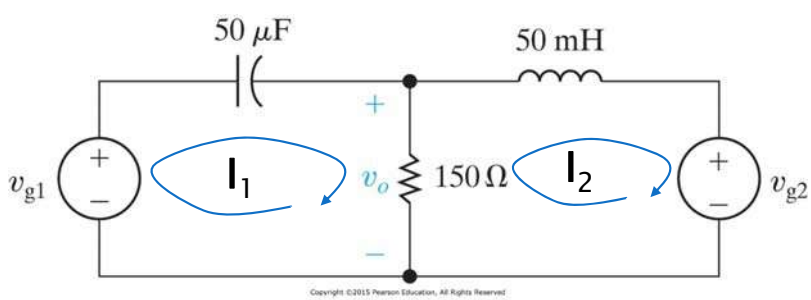

$$-25\angle 53.13^\circ + (-j50)\mathbf{I}_1 + 150(\mathbf{I}_1 - \mathbf{I}_2) = 0$$
$$18.03\angle 33.69^\circ + 150(\mathbf{I}_2 - \mathbf{I}_1) + j20\mathbf{I}_2 = 0$$
$$\Rightarrow \begin{array}{l} \mathbf{I}_1 = -0.4\text{A} \\ \mathbf{I}_2 = -0.5\text{A} \end{array}$$

Sinusoidal Steady State

- Qn. 9 (cont.):

$$v_{g1}(t) = 25\sin(400t + 143.13^\circ)\text{V} \qquad \mathbf{V}_{g1} = 25\angle 53.13^\circ\,\text{V}$$
$$v_{g2}(t) = 18.03\cos(400t + 33.69^\circ)\text{V} \qquad \mathbf{V}_{g2} = 18.03\angle 33.69^\circ\,\text{V}$$

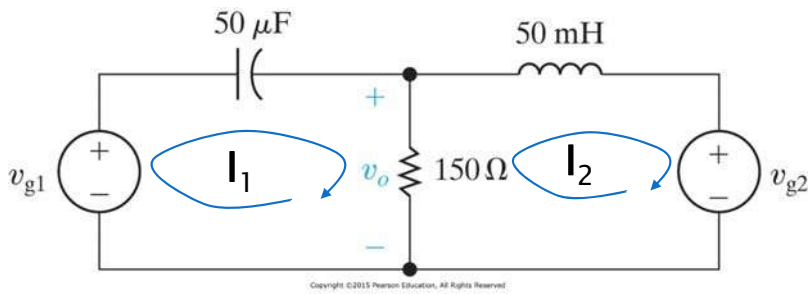

$$-25\angle 53.13^\circ + (-j50)\mathbf{I}_1 + 150(\mathbf{I}_1 - \mathbf{I}_2) = 0$$
$$18.03\angle 33.69^\circ + 150(\mathbf{I}_2 - \mathbf{I}_1) + j20\mathbf{I}_2 = 0$$

$$\Rightarrow \mathbf{I}_1 = -0.4\text{A} \qquad \mathbf{I}_2 = -0.5\text{A}$$

$$\boxed{\begin{aligned}\mathbf{V}_o &= 150(\mathbf{I}_1 - \mathbf{I}_2) = 15\text{V}\\ v_o(t) &= 15\cos(400t)\text{V}\end{aligned}}$$

Sinusoidal Steady State

- We can use each method that we learned in time domain in the frequency domain:
  - Kirchoff Laws.
  - Source Transformation.
  - Thévenin-Norton Equivalents.
  - Node Voltage and Mesh Current Methods.

Moreover, the methods below are also applicable. You are responsible to solve questions for the following methods in the frequency domain.

  - Superposition.
  - Current and Voltage Divisions.

Course Content

- ~~Circuit Components and Variables, Ohm's Law and Kirchoff's Laws~~
- ~~Circuit Analysis Techniques I - Node Voltage & Mesh Current Methods~~
- ~~Circuit Analysis Techniques II - Thevenin and Norton Equivalent Circuits~~
- ~~First Order RL and RC Circuits~~
- ~~Phasor Concept and AC Analysis of Circuits~~
- Midterm
- Introduction to Semiconductors
- Diode Applications
- BJT Analysis
- FET Analysis
- Operational Amplifier
- Midterm
- Logic Gates
- Make-up Exams

Questions

- Qn. 10: Find the equivalent impedance wir.t. terminals ab.

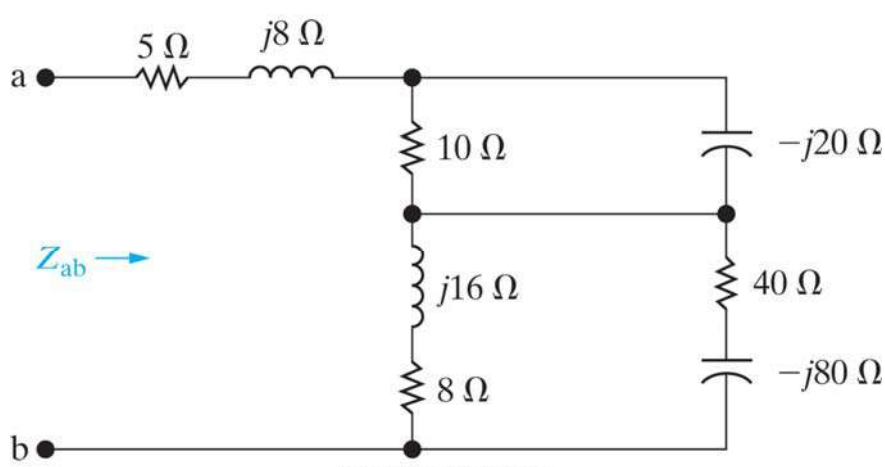

Copyright ©2015 Pearson Education, All Rights Reserved

Questions

- Qn. 11: What should be the frequency for the given circuit to be fully resistive?

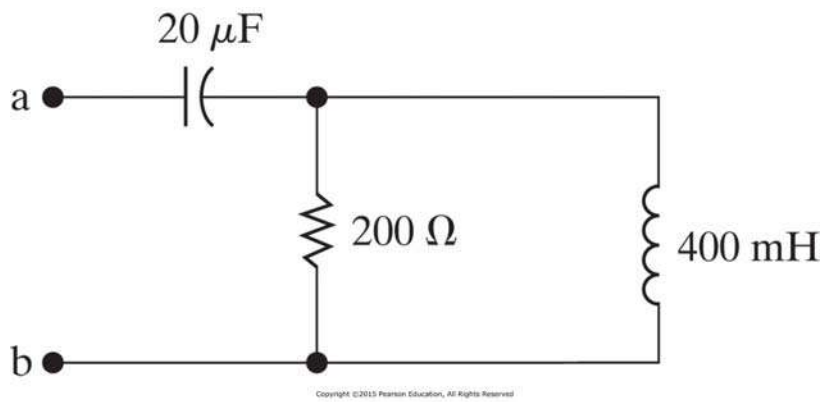

Questions

- Qn. 12: What should be the frequency for the voltage v_g and the current i_g to be in-phase?

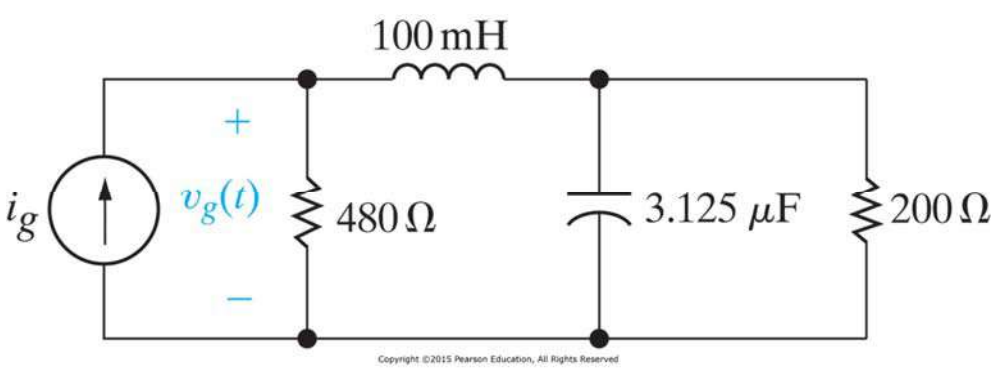

Questions

- Qn. 13: Find the Thevenin equivalent w.r.t. terminals ab.

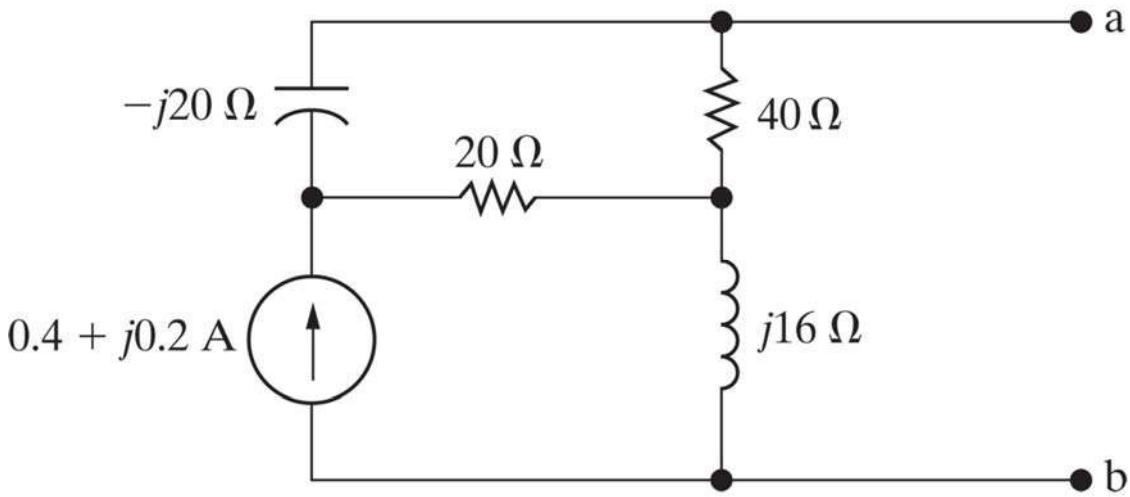

Copyright ©2015 Pearson Education, All Rights Reserved

Questions

- Qn. 14: Find the shown currents using mesh current method.

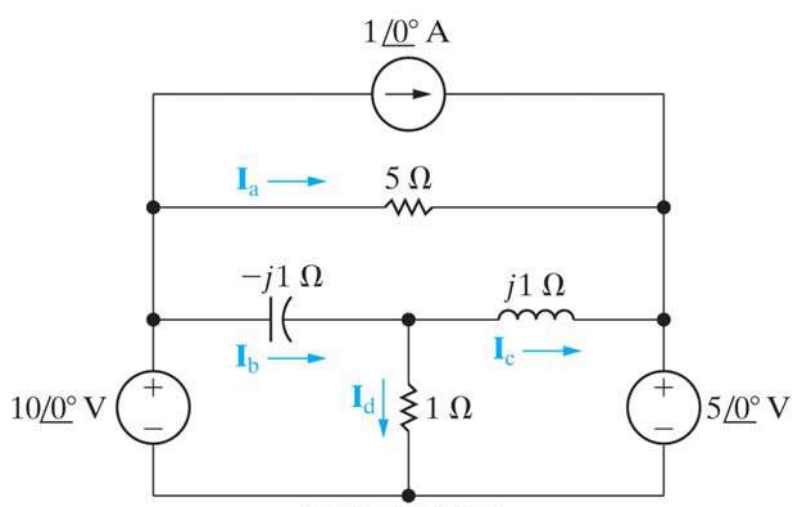

Copyright ©2015 Pearson Education, All Rights Reserved

ELE 296 Basic Electric Circuits and Electronics

- Semiconductor Theory and Diodes
  - n-Type and p-Type Extrinsic Materials
  - PN Junction
  - Semiconductor Diode
  - Rectifiers
  - Clippers
  - Clampers
  - Zener Diode

Semiconductor Theory and Diodes

- Conductor: Any material that will support a generous flow of charge when a voltage source of limited magnitude is applied across its terminals.
- Insulator: Any material that offers a very low level of conductivity under pressure from an applied voltage source.
- Semiconductor: A material that has a conductivity level somewhere between the extremes of an insulator and a conductor.

İletken	Yarıiletken	Yalıtkan
$\rho \approx 10^{-6}\Omega\cdot$cm (bakır)	$\rho \approx 50\Omega\cdot$cm (germanyum) $\rho \approx 50\text{x}10^{3}\Omega\cdot$cm (silikon)	$\rho \approx 10^{12}\Omega\cdot$cm (mika)

Semiconductor Theory and Diodes

- Bohr Atom Model

Neutrons and protons form the nucleus and electrons appear in fixed orbits around the nucleus.

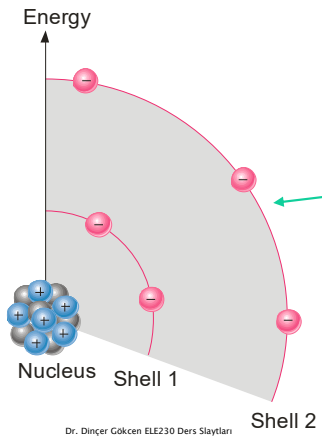

The outermost shell is the valance Shell and the electrons here in this Shell are called valance electrons.

The term valence is used to indicate that the potential (ionization potential) required to remove any one of these electrons from the atomic structure is significantly lower than that required for any shell.

Semiconductor Theory and Diodes

- Semiconductors

Their conductivity is between the extremes of an insulator and a conductor.
Silicon is a good semiconductor.

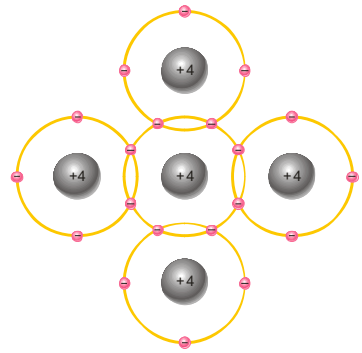

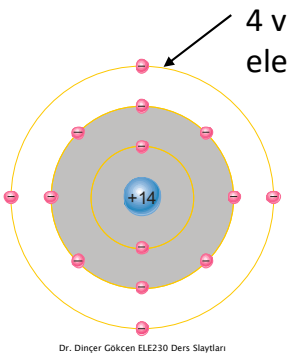

Bonding of atoms by the sharing of electrons is called covalent bonding. The covalent bond will result in a stronger bond but it is possible for the valence electrons to absorb sufficient kinetic energy to break the covalent bond.

Semiconductor Theory and Diodes

- Energy Levels

  The farther an electron is from the nucleus, the higher is the energy state.

There is no energy level difference in conductors, in insulators it is 5eV. For semiconductors the energy level difference is 1-2eV and the valance electrons can pass to conduction band naturally.

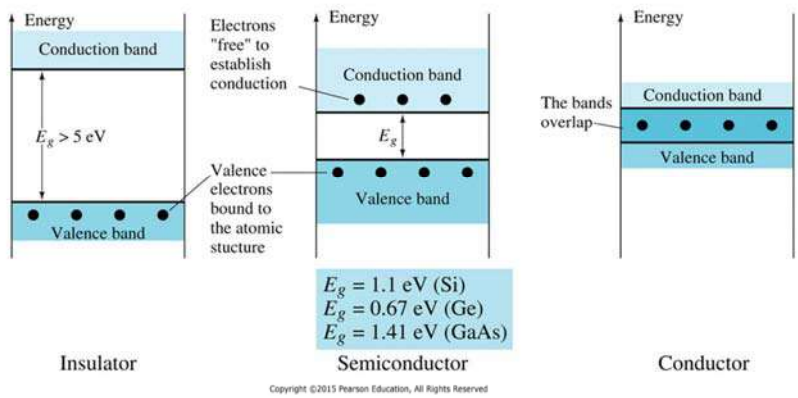

Semiconductor Theory and Diodes

- Extrinsic Materials

  Characteristics of a semiconductor material can be altered significantly by the addition of specific impurity atoms to the material.

  A semiconductor material that has been subjected to doping process is called an extrinsic material.

  There are two extrinsic materials of importance to semiconductor device fabrication:
  n-type and p-type materials.

Semiconductor Theory and Diodes

- Extrinsic Materials (n-Type)

An n-type material is created by introducing impurity elements that have five valence electrons.

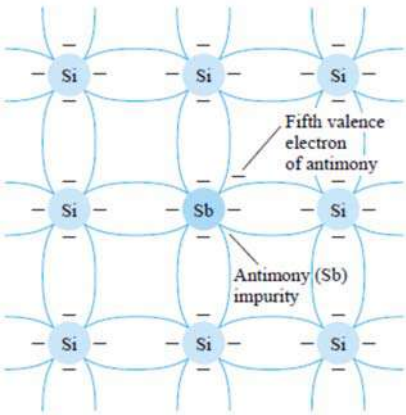

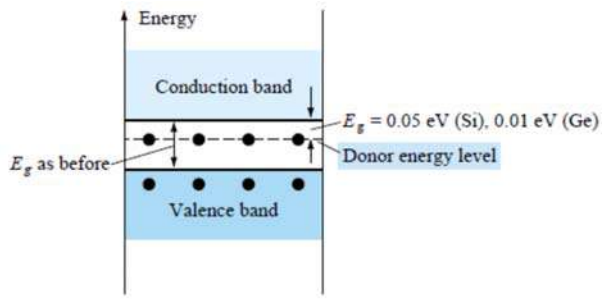

The material will have increased conduction.

Copyright ©2015 Pearson Education, All Rights Reserved

Semiconductor Theory and Diodes

- Extrinsic Materials (n-Type) (cont.)

The free electrons due to the added impurity have less difficulty to move into the conduction band. there are a large number of carriers (electrons) in the conduction level,

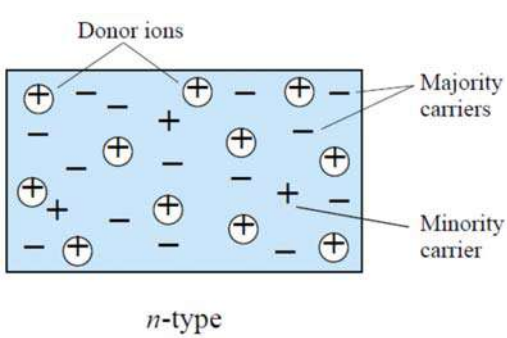

Copyright ©2015 Pearson Education, All Rights Reserved

The number of carrier electrons are higher than that of carrier holes.

Electrons are majority carriers and holes are minority carriers.

Semiconductor Theory and Diodes

- Extrinsic Materials (p-Type)

An n-type material is created by introducing impurity elements that have three valence electrons.

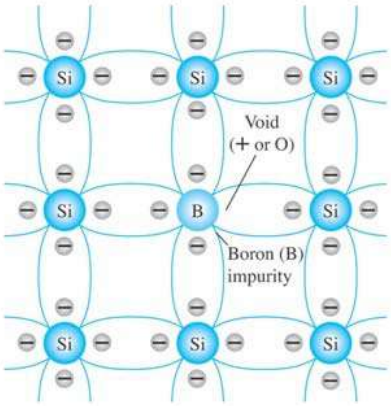

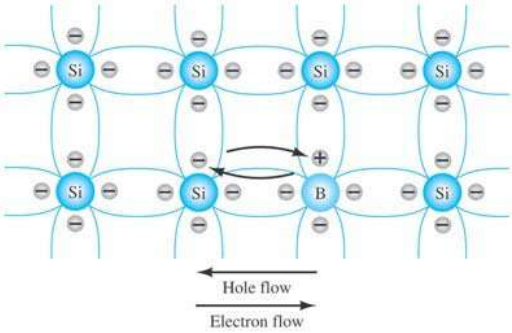

The material will have increased conduction.

Copyright ©2015 Pearson Education, All Rights Reserved

Semiconductor Theory and Diodes

- Extrinsic Materials (n-Type) (cont.)

The holes can accept free electrons.

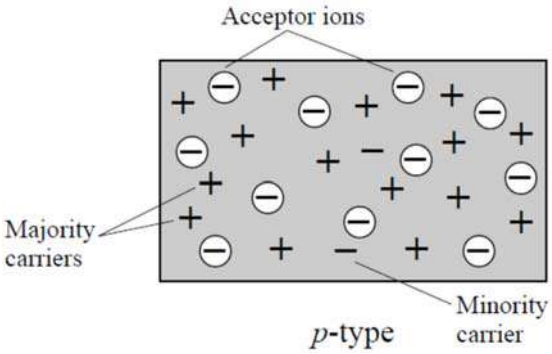

The number of carrier holes are higher than that of carrier electrons.

Holes are majority carriers and electrons are minority carriers.

Copyright ©2015 Pearson Education, All Rights Reserved

Semiconductor Theory and Diodes

- PN Junction – Semiconductor Diode

A junction is created by combining an -type and a p-type material.

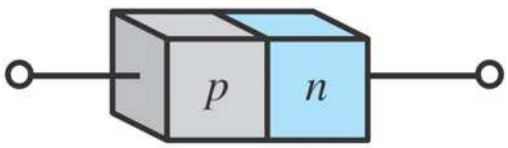

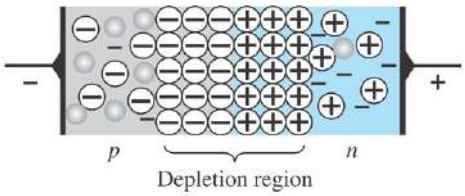

Copyright ©2015 Pearson Education, All Rights

At the junction the free electrons and free holes combine. As a result of this combination the majority carriers decrease at the junction. This are is called Depletion Region.

Semiconductor Theory and Diodes

- Semiconductor Diode – No Bias

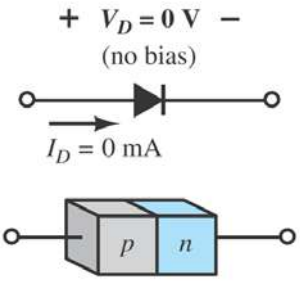

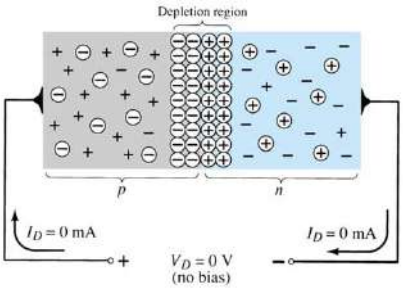

Copyright ©2015 Pearson Education, All Rights Reserved

There are few minority carriers but a good flow of this type of carriers.
There are a lot of majority carriers but low flow rate as a result of depletion region.
Net current is 0.

Semiconductor Theory and Diodes

- Semiconductor Diode – Reverse Bias

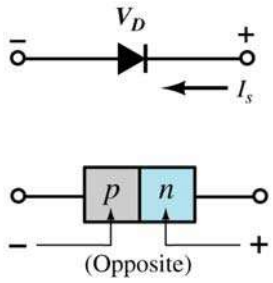

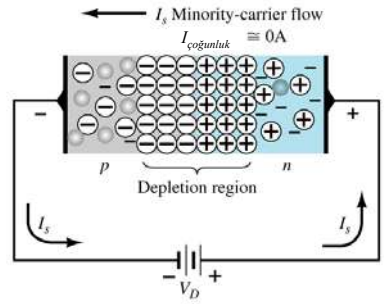

yright ©2015 Pearson Education, All Rights Rese

Depletion region widens.
Therefore the wall that stops the majority carriers widens.
The Saturation Current (I_s) resulting from minority carrier movements is negligibly small.

Semiconductor Theory and Diodes

- Yarıiletken Diyot – İleri Eğilimleme (Forward Bias)

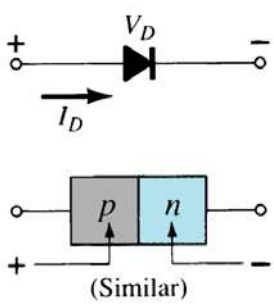

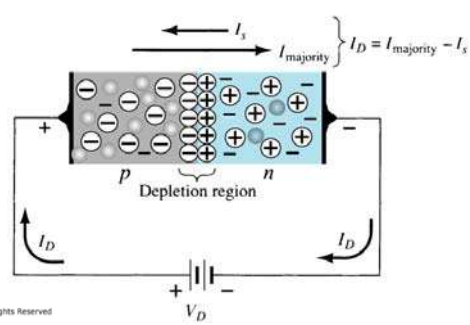

Copyright ©2015 Pearson Education, All Rights Reserved

Depletion region narrows.
Therefore the Wall that stops majority carriers narrows.
Total current is equal to the difference between majority carriers' and minority carriers' movements.

Semiconductor Theory and Diodes

- Semiconductor Diode

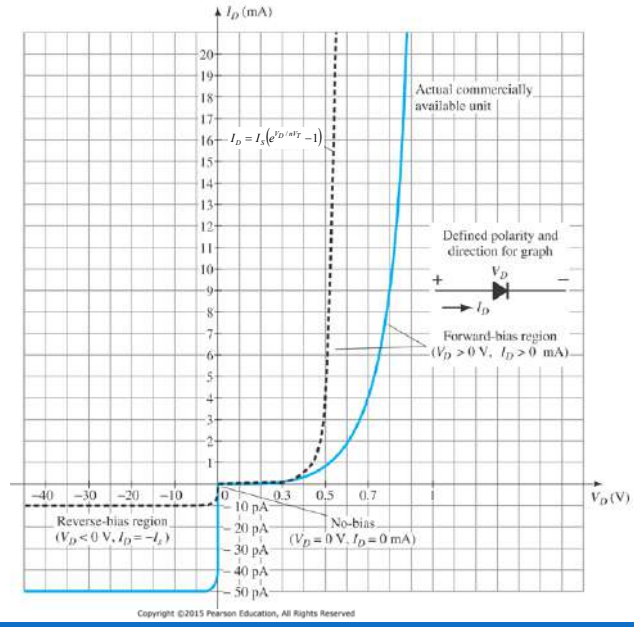

Copyright ©2015 Pearson Education, All Rights Reserved

Semiconductor Theory and Diodes

- Semiconductor Diode vs Ideal Diode

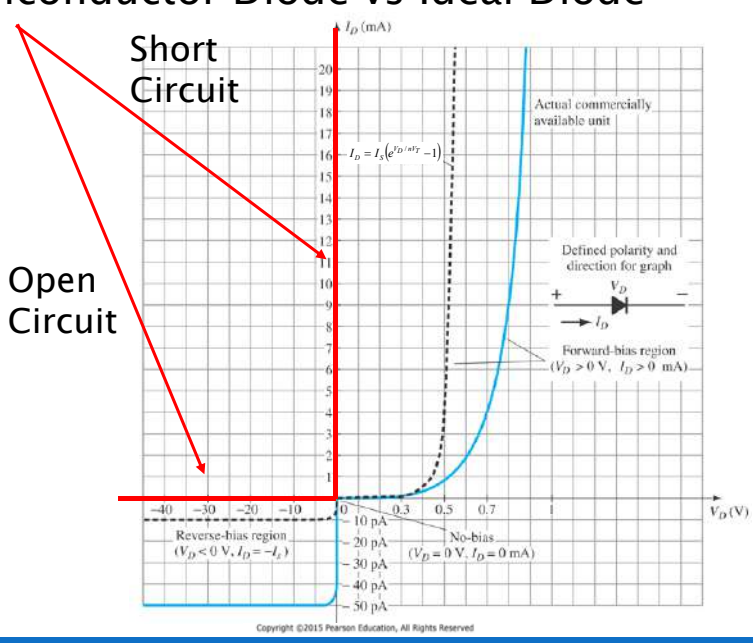

Copyright ©2015 Pearson Education, All Rights Reserved

Semiconductor Theory and Diodes

- Zener Region (Breakdown Region)

There is a point where the application of too negative a voltage with the reverse polarity will result in a sharp change in the characteristics.

The current increases at a very rapid rate in a direction opposite to that of the positive voltage region, this region is called Zener region and the current is called Avalanche current.

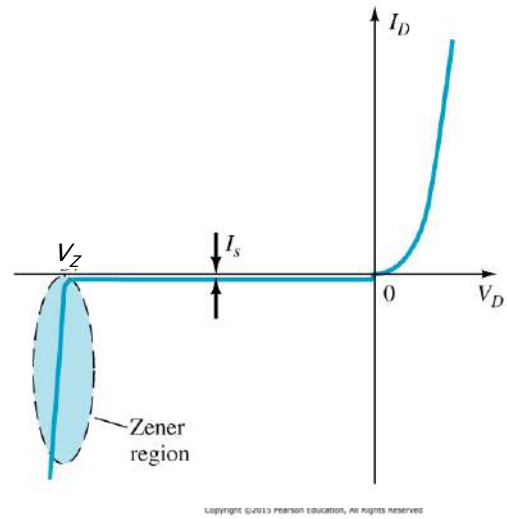

Semiconductor Theory and Diodes

- Semiconductor Diode – Equivalent Circuits
  - Ideal Equivalent Circuit – Ideal Diode:

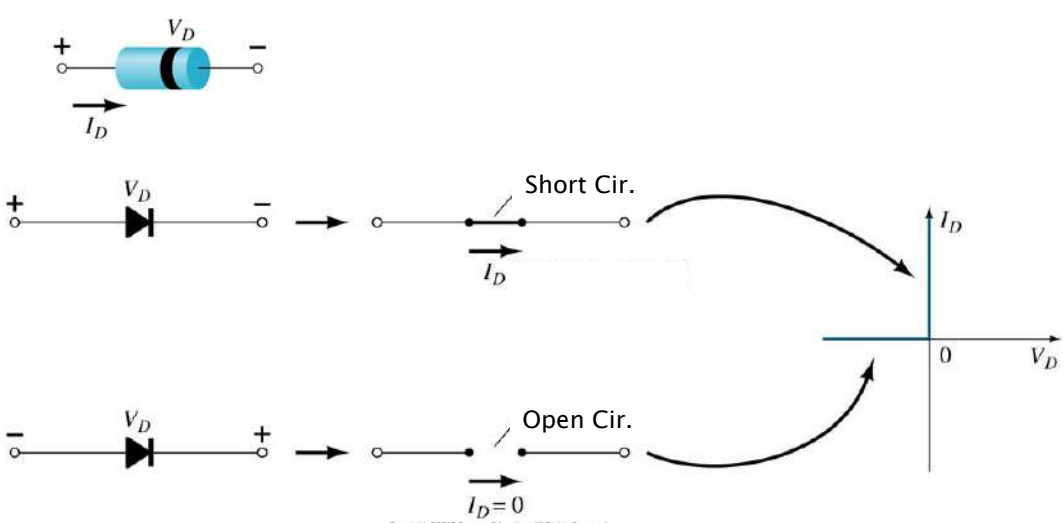

Semiconductor Theory and Diodes

- Semiconductor Diode – Equivalent Circuits
  - •Simplified Equivalent Circuit – Basic Diode:

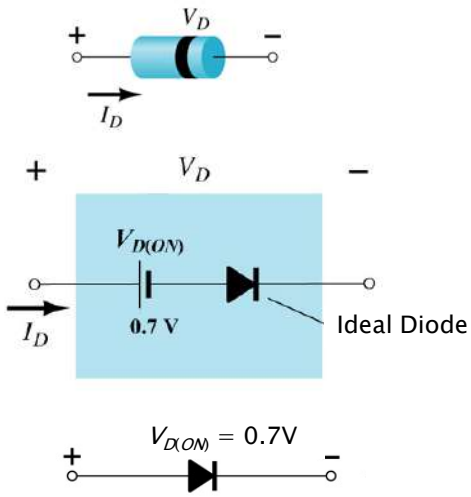

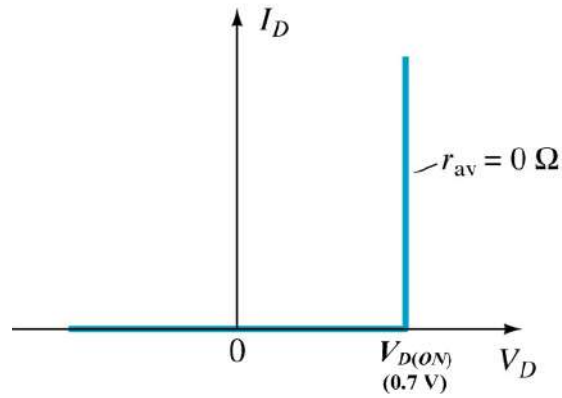

Copyright ©2015 Pearson Education, All Rights Reserved

Semiconductor Theory and Diodes

- Semiconductor Diode – Other Types

  - •Zener Diode:

Zener Diode is used in some applications where it is beneficial to work in the Zener Region. For example voltage regulators.

We will cover in more detail in the next hours.

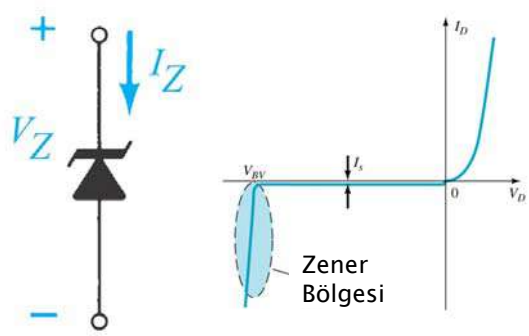

Copyright ©2015 Pearson Education, All Rights Reserved

Semiconductor Theory and Diodes

- Semiconductor Diode – Other Types

  •LED (Light Emitting Diode):
  Emits light in foward bias.

  These diodes can emit visible or invisible light. They can be used remote controls, security systems, illuminations systems, etc.

Copyright ©2015 Pearson Education, All Rights Reserved

Semiconductor Theory and Diodes

- Semiconductor Diode – Configurations

  •Series – Forward Bias – Basic Diode:

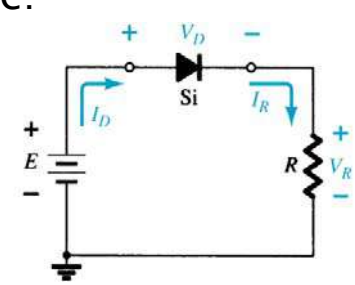

Constants
  Silicon Diode: $V_D = 0.7$ V
  Germanium Diode: $V_D = 0.3$ V

The analysis for Si:

$$E > V_D \qquad 0 < E < V_D$$

$$V_D = 0.7V \qquad ???$$

$$V_R = E - V_D$$

$$I_D = I_R = \frac{V_R}{R}$$

Copyright ©2015 Pearson Education, All Rights Reserved

Semiconductor Theory and Diodes

- Semiconductor Diode – Configurations

  •Series – Reverse Bias – Basic Diode:

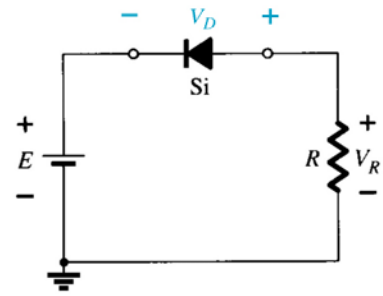

Copyright ©2015 Pearson Education, All Rights Reserved

Constants
Silicon Diode: $V_D = 0.7$ V
Germanium Diode: $V_D = 0.3$ V

The analysis for Si:

$$E > 0\text{V}$$
$$V_D = -E$$
$$V_R = 0\text{V}$$
$$I_D = 0\text{A}$$

Semiconductor Theory and Diodes

- Semiconductor Diode – Configurations

  •Parallel – Forward Bias – Basic Diode:

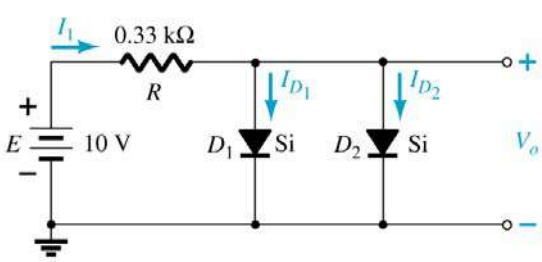

Copyright ©2015 Pearson Education, All Rights Reserved

If the voltages on the diodes are not known, then solve the question as if the diodes are in forward bias.

After the analysis check the voltages on the diodes.

$$KVL: V_R = E - V_D = 9.3\text{V}$$

$$I_1 = \frac{V_R}{R} \cong 28\text{mA}$$

$$I_{D1} = I_{D2} = \frac{I_1}{2} = 14\text{mA}$$

Questions

- Qn. 1: Find the voltage and current on the resistor.

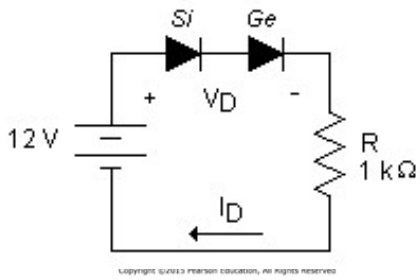

$$KVL: V_R = E - V_{D1} - V_{D2} = 12 - 0.7 - 0.3 = 11\text{V}$$

$$I_D = \frac{V_R}{R} = 11\text{mA}$$

Questions

- Qn. 2: Find the voltage and current on the resistor.

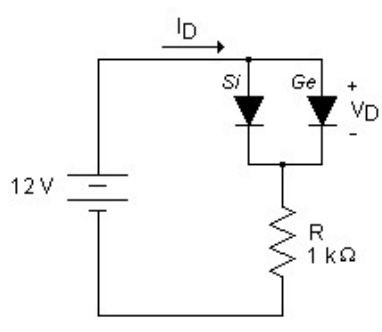

$$KVL: V_R = E - \min(V_{D1}, V_{D2}) = 12 - 0.3 = 11.7\text{V}$$

$$I_D = \frac{V_R}{R} = 11.7\text{mA}$$

Diode Applications

- Half Wave Rectifier

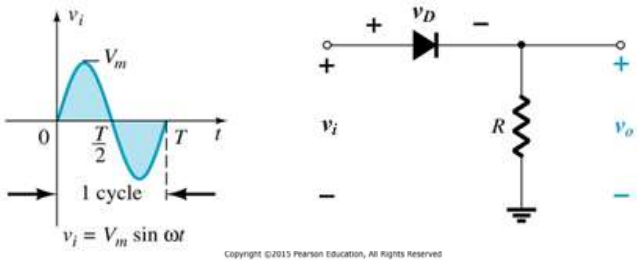

Find the voltage on the resistor using KVL:

$$KVL: -v_i + v_D + v_o = 0 \Rightarrow v_o = v_i - v_D$$

$$\text{Diode}: \begin{cases} \text{ON}, & v_i \geq v_{D(ON)} \Rightarrow \text{ Short Cir. } \Rightarrow v_o = v_i - v_{D(ON)} \\ \text{OFF}, & v_i < v_{D(ON)} \Rightarrow \text{ Open Cir. } \Rightarrow v_o = 0 \end{cases}$$

Diode Applications

- Half Wave Rectifier (cont.)

Ideal diode application. Diode is ON only in positive cycle of the input.

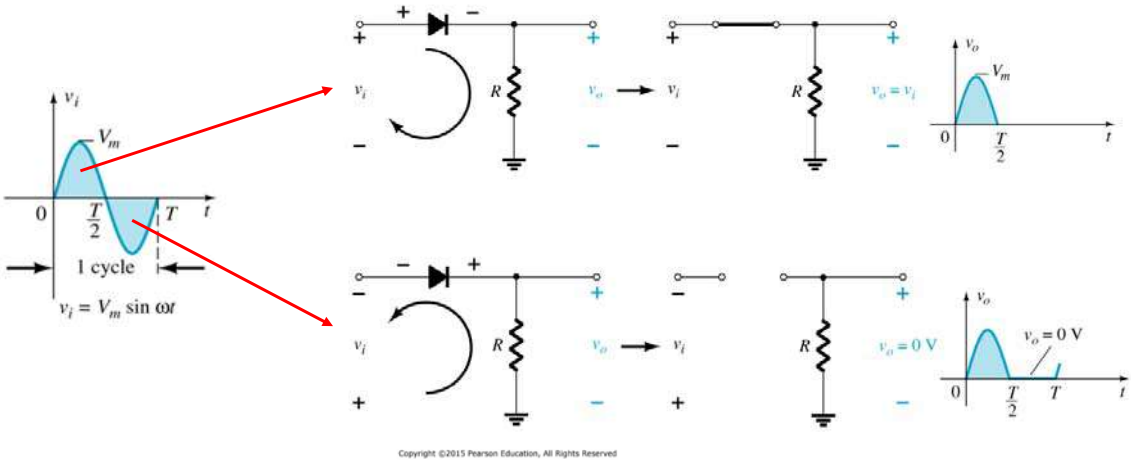

Diode Applications

- Half Wave Rectifier (cont.)

Basic diode application. Diode is ON only in some part of positive cycle of the input.

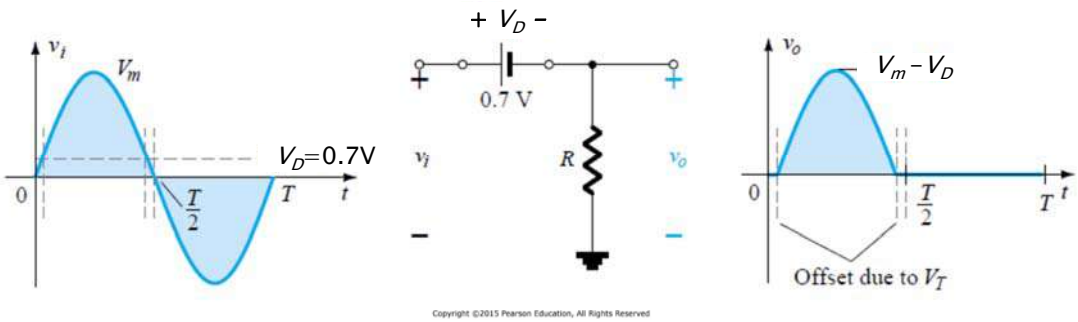

Copyright ©2015 Pearson Education, All Rights Reserved

Diode Applications

- Full Wave Rectifier

Ideal diode application.

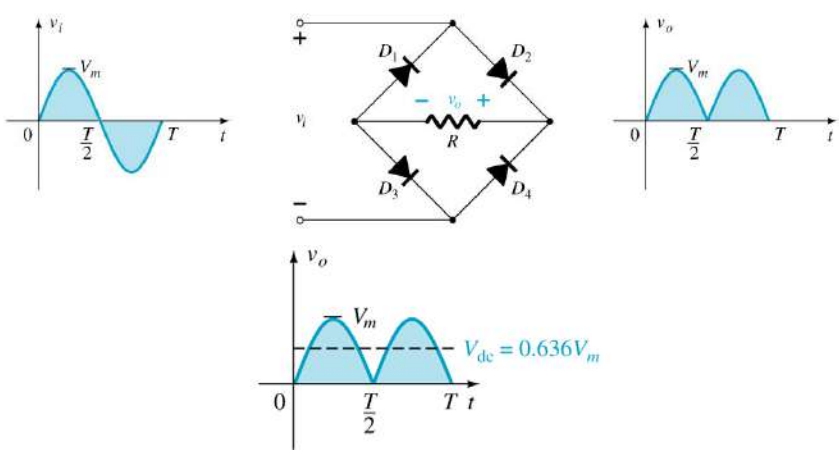

Copyright ©2015 Pearson Education, All Rights Reserved

Diode Applications

- Full Wave Rectifier (cont.)

Ideal diode application. How does it work?

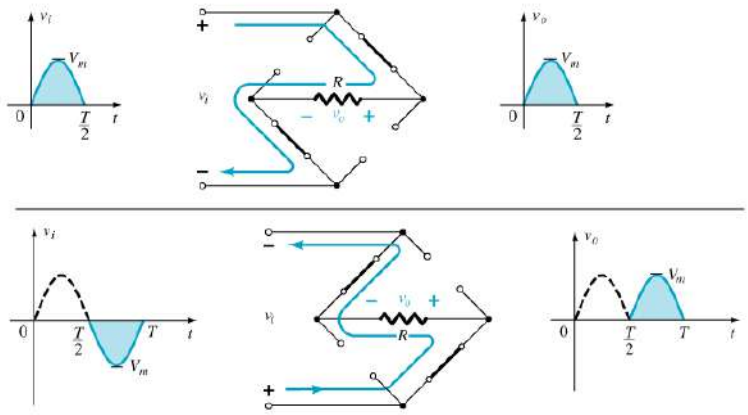

Copyright ©2015 Pearson Education, All Rights Reserved

Diode Applications

- Full Wave Rectifier (cont.)

Basic diode application. How does it work?

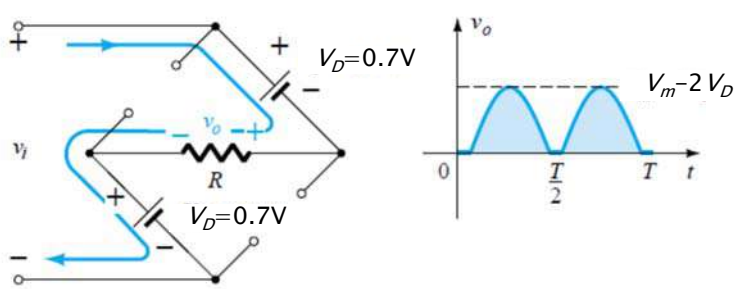

Copyright ©2015 Pearson Education, All Rights Reserved

Diode Applications

- Clippers

A diode in seriesi clips the region outside of forward bias.

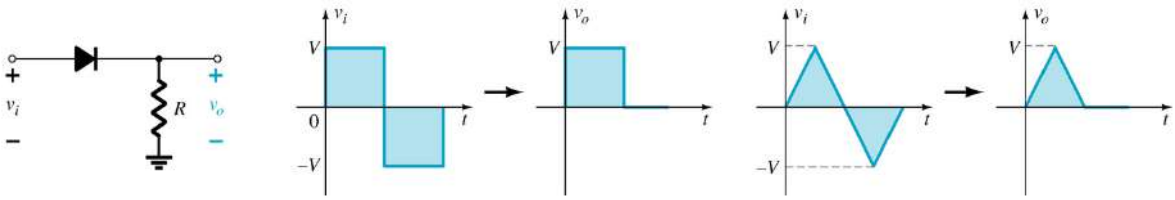

Copyright ©2015 Pearson Education, All Rights Reserved

1. Where is the output voltage defined?
2. Define the current directions.
3. What is the 'ON' voltage of diode.
4. Draw the output voltage w.r.t. the input voltage.

Diode Applications

- Clippers (cont.)

A diode in parallel clips the forward bias voltage.

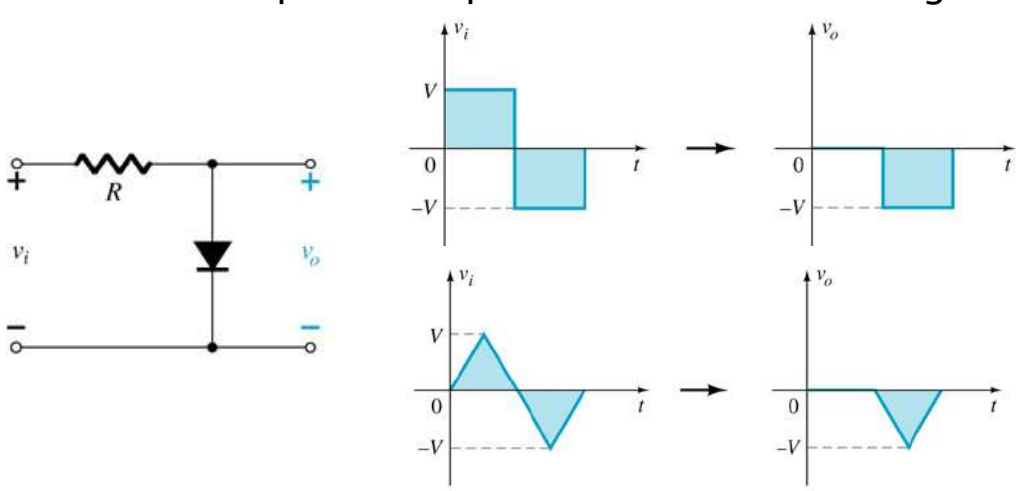

Copyright ©2015 Pearson Education, All Rights Reserved

Diode Applications

- Clippers (cont.)

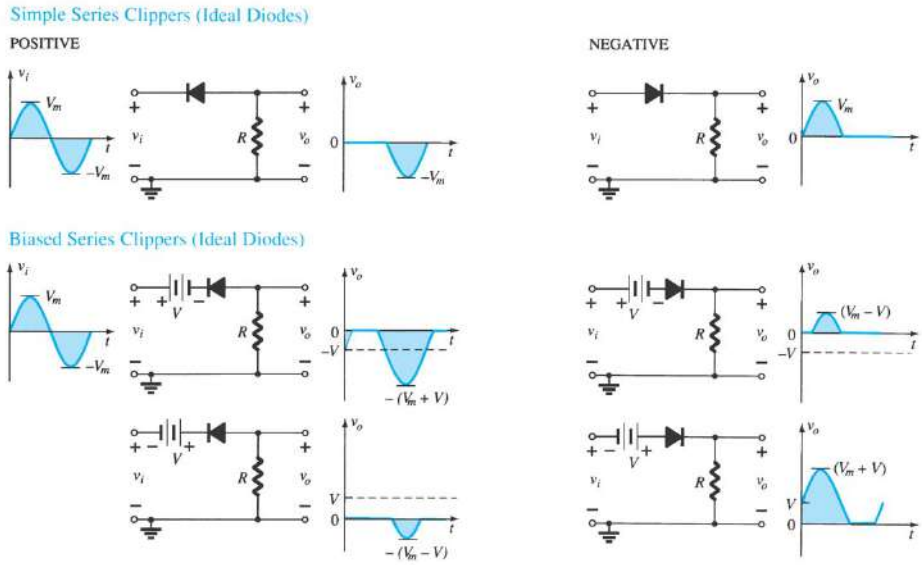

Copyright ©2015 Pearson Education, All Rights Reserved

Diode Applications

- Clippers (cont.)

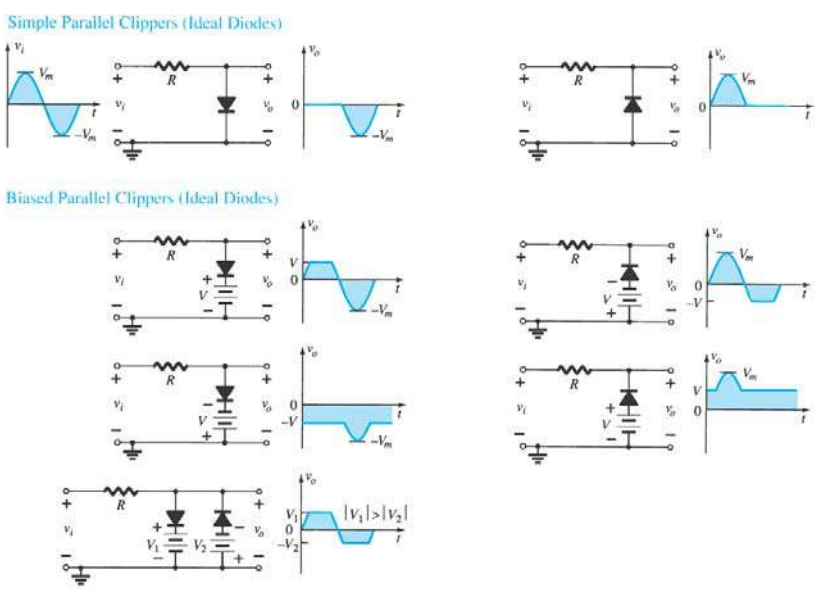

Copyright ©2015 Pearson Education, All Rights Reserved

Diode Applications

- Clampers

A diode, a resistor, and a capacitor that shifts a waveform to a different dc level without changing the appearance of the applied signal.

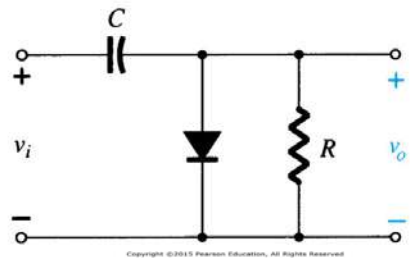

It is assumed that the capacitor is fully charged and the chosen resistor and capacitor of the network must be chosen such that the time constant determined by RC is sufficiently large, therefore the capacitor does not discharge significantly.

Diode Applications

- Clampers (cont.)

1. Determine the output voltage terminals and the polarities.
2. Assuming that the capacitor fully charges instantly and does not discharge significantly.
3. Determine when the diode turns 'ON' and when it turns 'OFF'.
4. It is useful to note that the output peak to peak value is equal to the input peak to peak value.

Diode Applications

- Clampers (cont.)

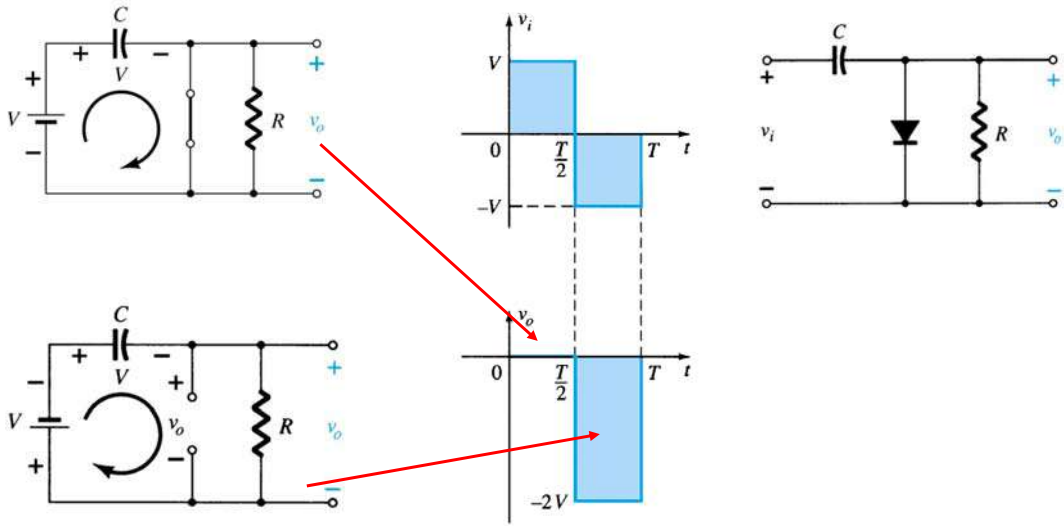

Diode Applications

- Clampers (cont.)

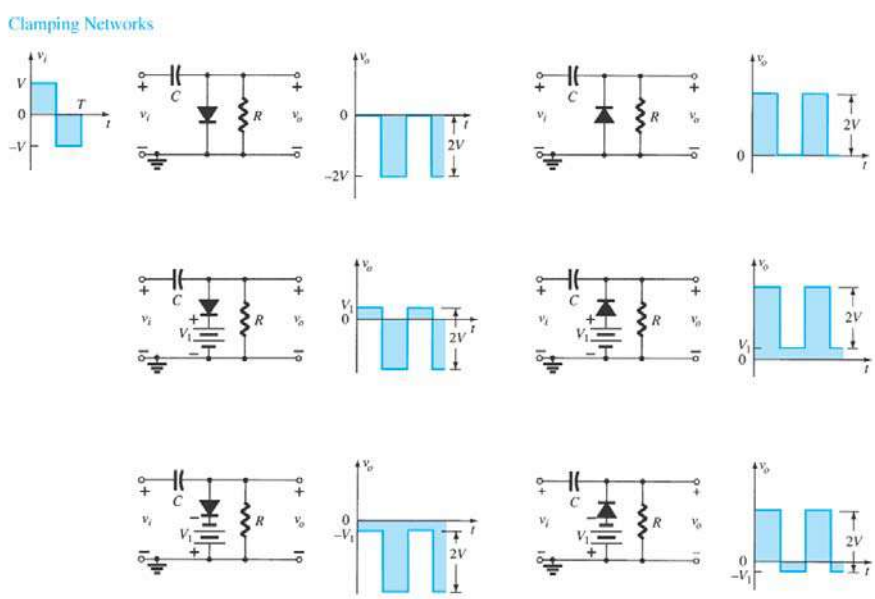

Diode Applications

- Zener Diode

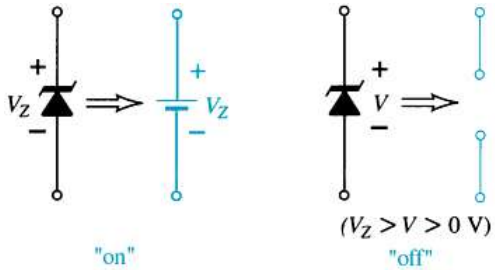

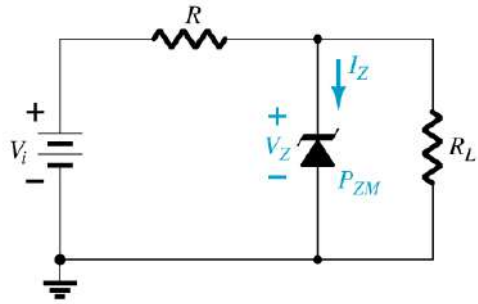

Copyright ©2015 Pearson Education, All Rights Reserved

It is used to produce constant voltage between needed terminals.
For zener diode the 'ON' condition happens in reverse bias.
When the reverse bias voltage is at least V_Z the zener produces constant voltage V_Z. Otherwise it is open circuit.

Diode Applications

- Zener Diode (cont.)
  Circuit analysis:

$$V_{R_L} = V_i \frac{R_L}{R_L + R}$$

$$\text{if } V_{R_L} \geq V_Z \Rightarrow \text{zener is ON} \Rightarrow V_{R_L} = V_Z$$

$$V_R = V_i - V_Z$$

$$I_R = \frac{V_R}{R} = \frac{V_i - V_Z}{R}$$

$$I_{R_L} = \frac{V_{R_L}}{R_L} = \frac{V_Z}{R_L}$$

$$I_Z = I_R - I_{R_L} = \frac{V_i - V_Z}{R} - \frac{V_Z}{R_L}$$

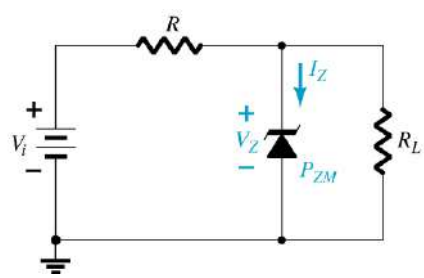

Copyright ©2015 Pearson Education, All Rights Reserved

First find the voltage on zener as if it is in 'OFF' state.

If the voltage on zener is at least V_Z then the zener is 'ON' and we have to re-calculate currents and voltages.

Diode Applications

- Qn. 3: Find V_L, V_R, I_Z, and P_Z.
  Repeat for $R_L = 3k\Omega$.

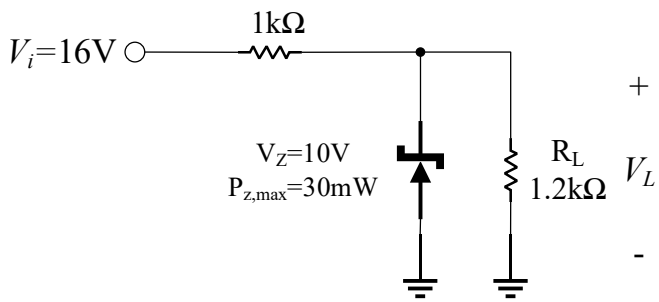

Diode Applications

- Qn. 3 (cont.): Find V_L, V_R, I_Z, and P_Z.

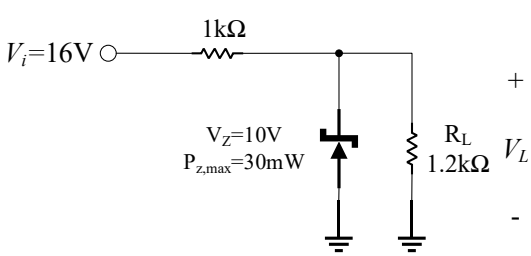

$$V_L = \frac{R_L}{R + R_L} V_i = \frac{1.2\text{k}}{2.2\text{k}} 16 = 8.73\text{V}$$

$\Rightarrow$ Zener is 'OFF'

$$V_R = V_i - V_L = 7.27\text{V}$$

$$I_Z = 0\text{A}$$

$$P_Z = 0\text{W}$$

Diode Applications

- Qn. 3 (cont.): Find V_L, V_R, I_Z, and P_Z for $R_L = 3k\Omega$.

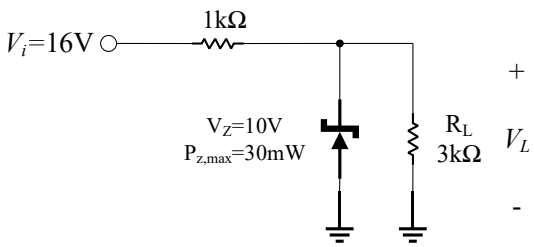

$$V_L = \frac{R_L}{R + R_L} V_i = \frac{3k}{4k} 16 = 12V$$

$\Rightarrow$ Zener is 'ON'

$$\Rightarrow V_L = V_Z = 10V$$

$$V_R = V_i - V_L = 6V$$

$$I_Z = I_R - I_L = \frac{V_R}{R} - \frac{V_L}{R_L} = 2.67mA$$

$$P_Z = V_Z I_Z = 26.7mW$$

Diode Applications

- Qn. 4: Find the range of values of R_L and I_L that keeps V_L at 10V.

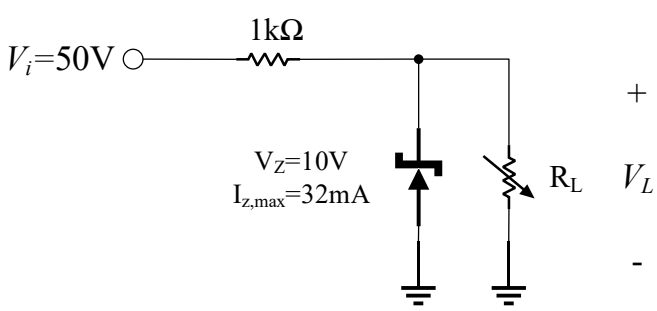

Diode Applications

- Qn. 4 (cont.): Find the range of values of R_L and I_L that keeps V_L at 10V.

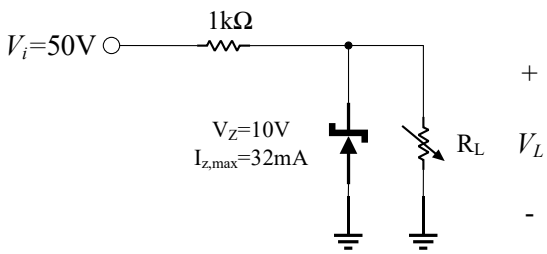

$$V_L = \frac{R_L}{R+R_L} V_i \geq 10\text{V}$$

$$\Rightarrow 50R_L \geq 10\text{k} + 10R_L \Rightarrow R_L \geq 250\Omega$$

$$I_Z = I_R - I_L = \frac{V_R}{R} - \frac{V_L}{R_L} \leq 32\text{mA}$$

$$\Rightarrow \frac{40}{1\text{k}} - \frac{10}{R_L} \leq 32\text{mA} \Rightarrow R_L \leq 1250\Omega$$

$$\Rightarrow 250\Omega \leq R_L \leq 1250\Omega$$

$$I_{L,\min} = I_R - I_{Z,\max} = 40\text{mA} - 32\text{mA} = 8\text{mA}$$

Diode Applications

- Qn. 5: Find the range of values of V_i that keeps the Zener 'ON'.

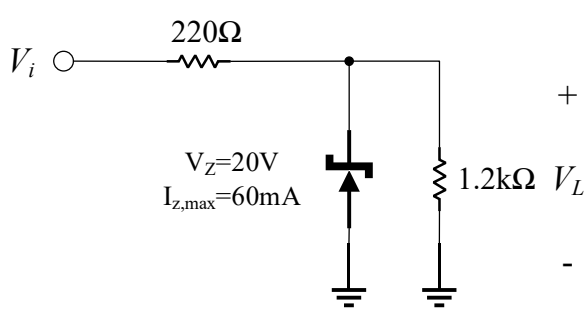

Diode Applications

- Qn. 5 (cont.): Find the range of values of V_i that keeps the Zener 'ON'.

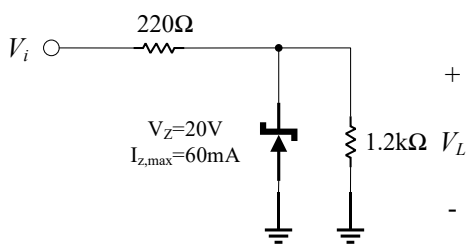

$$V_L = \frac{R_L}{R+R_L} V_i \geq 20\text{V}$$

$$\Rightarrow V_i \geq \frac{1420}{1200} 20\text{V} \Rightarrow V_i \geq 23.67\text{V}$$

$$I_{Z,\max} = I_{R,\max} - I_L = \frac{V_{i,\max} - 20\text{V}}{R} - \frac{V_L}{R_L}$$

$$\Rightarrow 60\text{mA} = \frac{V_{i,\max} - 20\text{V}}{R} - \frac{V_L}{R_L}$$

$$\Rightarrow V_{i,\max} = \left(60\text{mA} + \frac{20\text{V}}{1.2\text{k}\Omega}\right) 220\Omega + 20\text{V} = 36.87\text{V}$$

Course Content

- ~~Circuit Components and Variables, Ohm's Law and Kirchoff's Laws~~
- ~~Circuit Analysis Techniques I - Node Voltage & Mesh Current Methods~~
- ~~Circuit Analysis Techniques II - Thevenin and Norton Equivalent Circuits~~
- ~~First Order RL and RC Circuits~~
- ~~Phasor Concept and AC Analysis of Circuits~~
- Midterm
- ~~Introduction to Semiconductors~~
- ~~Diode Applications~~
- BJT Analysis
- FET Analysis
- Operational Amplifier
- Midterm
- Logic Gates
- Make-up Exams

ELE 296 Basic Electric Circuits and Electronics

- BJT – Bipolar Junction Transistors
  - BJT Operation
  - BJT Operation Regions
  - BJT DC Analysis
  - Use Cases

BJT

- Diode (review)

Two differnet type of extrinsic materials forms the diode. It has a single junction!

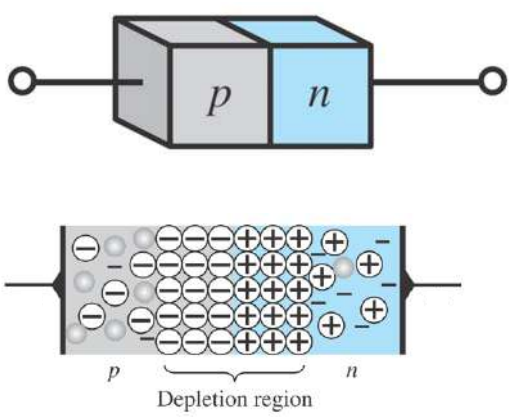

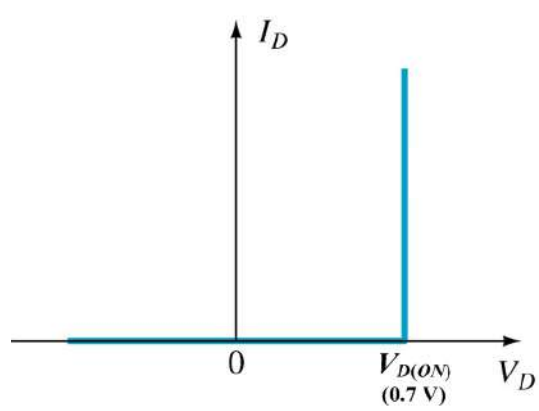

Copyright ©2015 Pearson Education, All Rights Reserved

BJT

- Bipolar Junction Transistors

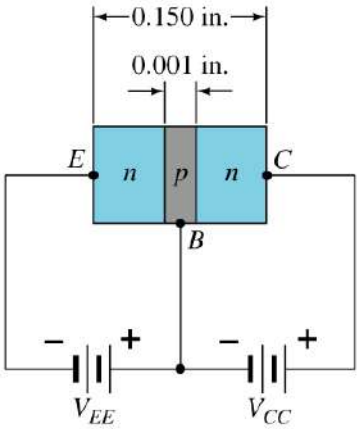

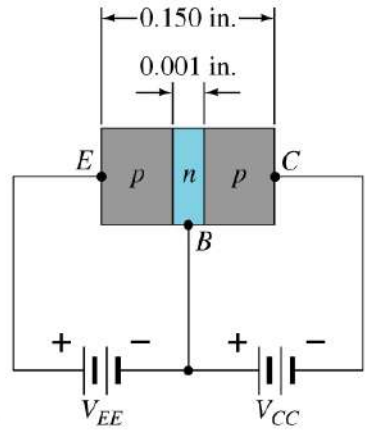

Copyright ©2015 Pearson Education, All Rights Reserved

E -> Emitter
B -> Base
C -> Collector

BJT

- BJT (npn) Operation

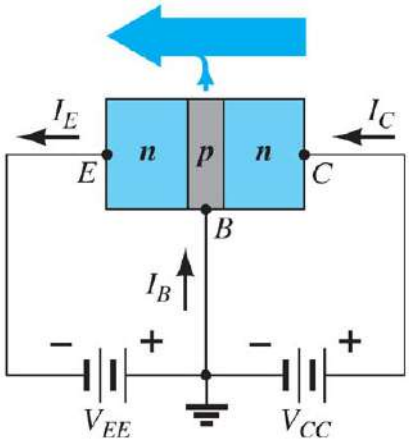

Copyright ©2015 Pearson Education, All Rights Reserved

$$KCL: I_E = I_C + I_B$$

BJT

- Common Emitter Configuration

The emitter is common to both the input and output sides of the configuration.

The arrows indicate the direction of the current.

Two sets of characteristics are necessary to describe the behavior:
One for the input or base-emitter circuit and one for the output or collector-emitter circuit..

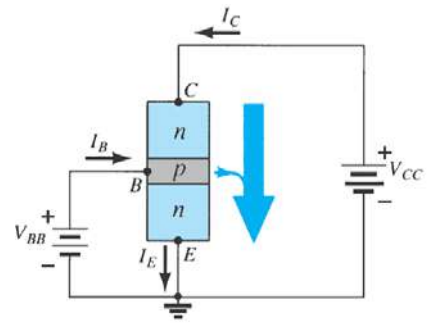

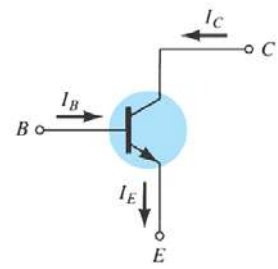

Copyright ©2015 Pearson Education, All Rights Reserved

BJT

- Common Emitter (cont.)

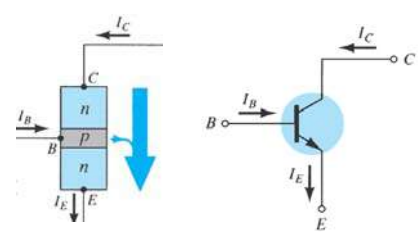

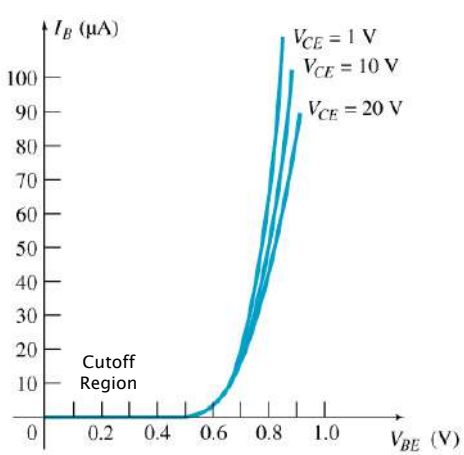

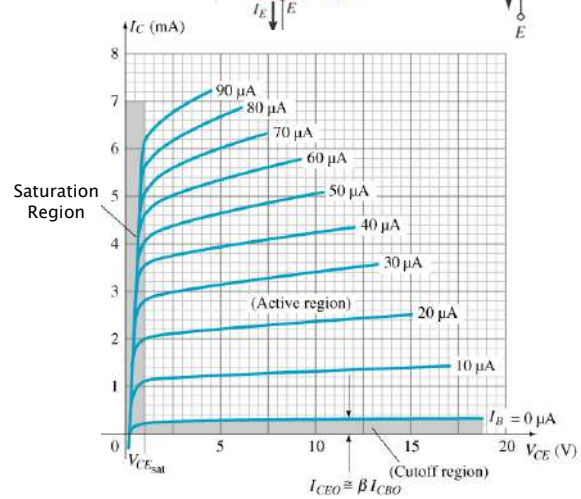

Copyright ©2015 Pearson Education, All Rights Reserved

BJT

- Common Emitter (cont.)

  Active Region: B-E junction is forward, B-C junction is reverse biased.

  Cut-Off Region: Both B-E and B-C junctions are reverse biased.

  Saturation Region: Both B-E and B-C junctions are forward biased.

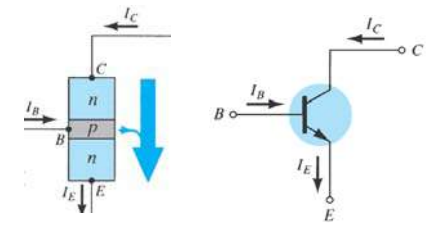

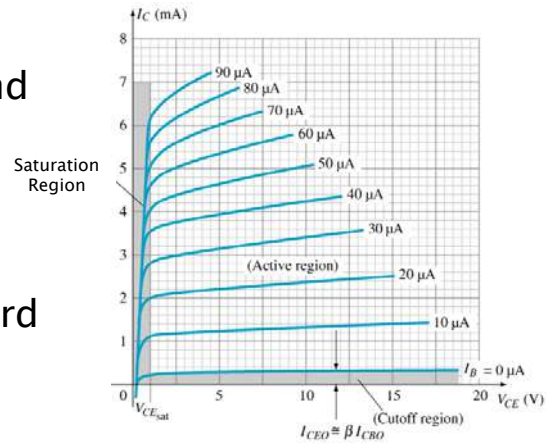

Copyright ©2015 Pearson Education, All Rights Reserved

BJT

- Common Emitter (cont.)

  For constant collector voltage, the bE junction acts like a diode.

  We can approximate this behaviour to a basic diode.

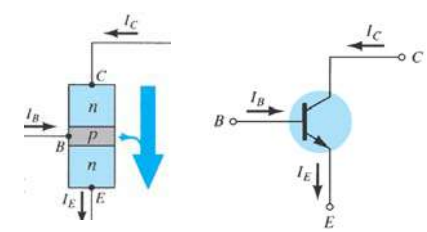

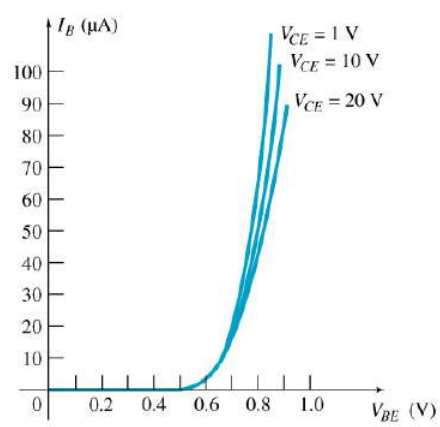

Copyright ©2015 Pearson Education, All Rights Reserved

BJT

- Common Emitter (cont.)

For constant collector voltage, the bE junction acts like a diode.

We can approximate this behaviour to a basic diode.

In the active and saturation regions the voltage V_{BE} will be taken as constant, e.g., 0.7V.

This value can change depending on the material used!!!

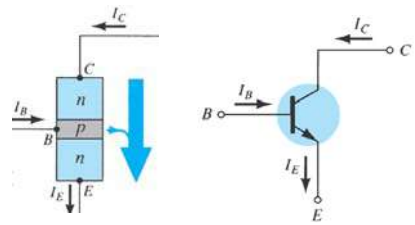

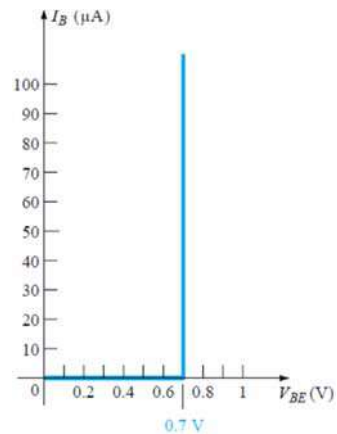

Copyright ©2015 Pearson Education, All Rights Reserved

BJT

- Beta (A Diode Characteristic)

In the DC mode the levels of I_C and I_B are related by a quantity called Beta and defined by

$$\beta_{DC} = \frac{I_C}{I_B}$$

$$\begin{aligned} I_E &= I_C + I_B \\ &= \beta I_B + I_B \\ &= (\beta + 1) I_B \end{aligned}$$

BJT – DC Analysis

- DC Biasing of a BJT

  It is assumed that the transistor is a magical device that can raise the level of the applied AC input without the assistance of an external energy source. WRONG!!!

  Any increase in AC voltage, current, or power is the result of a transfer of energy from the applied DC supplies.

  The applied DC voltage turns 'ON' the transistor and start the amplification. It also limits the amplified value (the output can not be infinity).

BJT – DC Analysis

- BJT Operating Points

These values can change depending on the material used!!!

•Active – Linear Region:
- Base-Emitter forward biased $->V_{BE} \geq 0.7V$
- Base-Collector reverse biased $->V_{BC} \leq 0.5V$

•Cut-Off Region:
- Base-Emitter reverse biased $->V_{BE} \leq 0.7V$
- Base-Collector reverse biased $->V_{BC} \leq 0.5V$

•Doyum Bölgesi:
- Base-Emitter forward biased $->V_{BE} \geq 0.7V$
- Base-Collector forward biased $->V_{BC} \geq 0.5V$

BJT – DC Analysis

- Steps to follow in the DC analysis of a BJT

1. Draw the DC equivalent circuit.
   Capacitors are open, inductors are short circuit.
   AC voltage sources are short circuit,
   AC current sources are open circuit.

2. Write KVL for the B-E junction.
   $V_{BE}=V_{BE(ON)}$.
   Find I_{BQ} and/or I_{EQ}.

3. Write KVL for the C-E junction.
   Find I_{CQ} assuming that the transistor is 'ON'.
   Find V_{CEQ}. If $V_{CEQ}>V_{CEQ(SAT)}$ then the BJT is indeed in active mode.
   If $V_{CEQ}\leq V_{CEQ(SAT)}$ then the BJT is in saturation. You have to re-calculate I_{CQ} by taking $V_{CEQ}=V_{CEQ(SAT)}$.

BJT – DC Analysis

- DC Circuits: Fixed Bias Circuit

1. Draw the DC equivalent circuit.

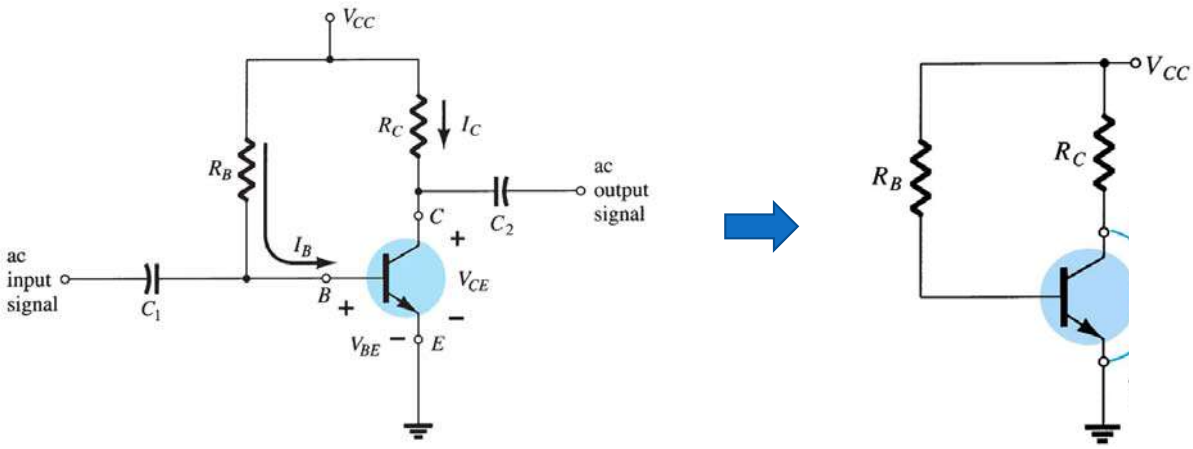

Copyright ©2015 Pearson Education, All Rights Reserved

BJT – DC Analysis

- DC Circuits: Fixed Bias Circuit

2. Write KVL for B–E junction.

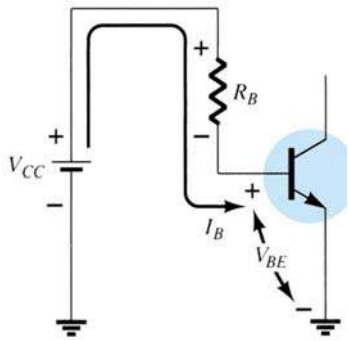

$$KVL: -V_{CC} + I_B R_B + V_{BE} = 0$$

$$\Rightarrow I_B = \frac{V_{CC} - V_{BE}}{R_B}$$

3. Write KVL for C–E junction.

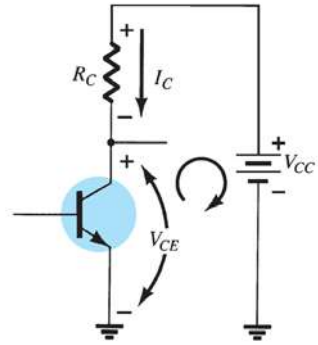

Copyright ©2015 Pearson Education, All Rights Reserved

$$KVL: -V_{CC} + I_C R_C + V_{CE} = 0$$

$$I_C = \beta I_B$$

$$\Rightarrow V_{CE} = V_{CC} - \beta I_B R_C$$

BJT – DC Analysis

- Qn. 1: Find I_{BQ}, I_{CQ}, V_{CEQ}, V_B, V_C, and V_{BC}.

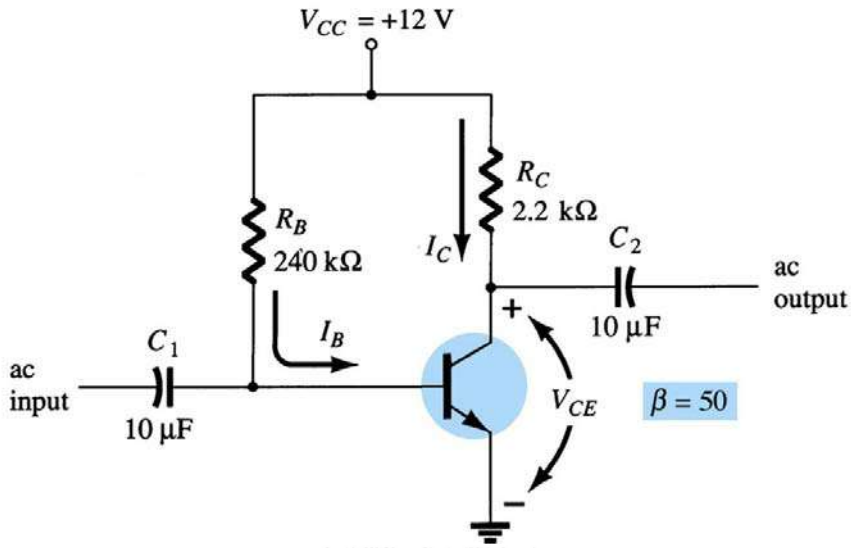

Copyright ©2015 Pearson Education, All Rights Reserved

BJT – DC Analysis

- Qn. 1 (cont.): Find I_{BQ}, I_{CQ}, V_{CEQ}, V_B, V_C, and V_{BC}.

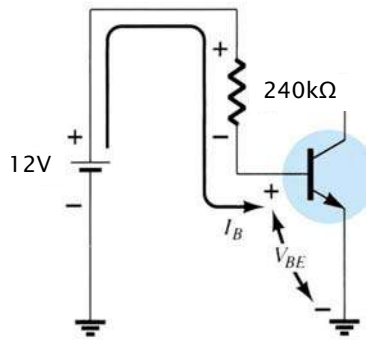

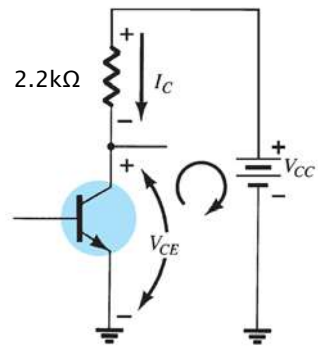

Copyright ©2015 Pearson Education, All Rights Reserved

$$KVL: -V_{CC} + I_B R_B + V_{BE} = 0$$

$$\Rightarrow I_B = \frac{V_{CC} - V_{BE}}{R_B} = 47.08\mu\text{A}$$

$$KVL: -V_{CC} + I_C R_C + V_{CE} = 0$$

$$I_C = \beta I_B = 2.35\text{mA}$$

$$\Rightarrow V_{CE} = V_{CC} - \beta I_B R_C = 6.83\text{V}$$

BJT – DC Analysis

- DC Circuits: Fixed Bias Circuit (cont.)

Saturation Region

If $V_{CEQ} \leq V_{CEQ(SAT)}$ then BJT is in saturation.

You can also use I_{CQ} in order to determine if the BJT is in saturation.

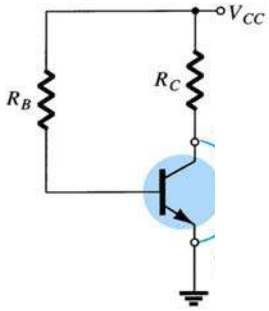

$$V_{CE(\text{sat})} \cong 0V$$

$$I_{C(\text{sat})} = \frac{V_{CC} - V_{CE(\text{sat})}}{R_C} \approx \frac{V_{CC}}{R_C}$$

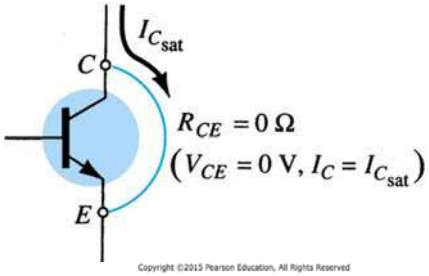

Copyright ©2015 Pearson Education, All Rights Reserved

If I_{CQ} is higher than this saturation current then the BJT is in saturation.

BJT – DC Analysis

- DC Circuits: Fixed Bias Circuit (cont.)

Saturation Region

Keep in mind that for different type of materials and different types of approximations the $V_{CEQ(SAT)}$ value can change, e.g.,

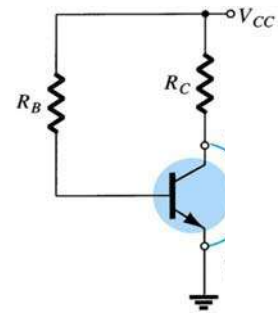

$$V_{CE(\text{sat})} \cong 0.2V$$

$$I_{C(\text{sat})} = \frac{V_{CC} - V_{CE(\text{sat})}}{R_C} \approx \frac{V_{CC} - 0.2}{R_C}$$

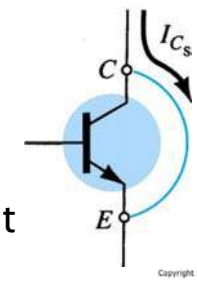

Copyright ©2015 Pearson Education, All Rights Reserved

If I_{CQ} is higher than this saturation current then the BJT is in saturation.

BJT – DC Analysis

- Qn. 1 (cont.): Find the collector current if the transistor is in saturation. Suppose that $V_{CE(SAT)}$=0V.

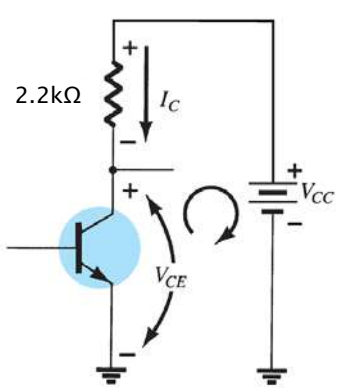

Copyright ©2015 Pearson Education, All Rights Reserved

$$KVL: -V_{CC} + I_{C(SAT)}R_C + V_{CE(SAT)} = 0$$

$$\Rightarrow I_{C(SAT)} = \frac{V_{CC} - V_{CE(SAT)}}{R_C} = 5.45\text{mA}$$

BJT – DC Analysis

- Qn. 1 (cont.): Find R_C if the transistor is in saturation. Use the value of I_B found before. Suppose that $V_{CE(SAT)}$=0.2V.

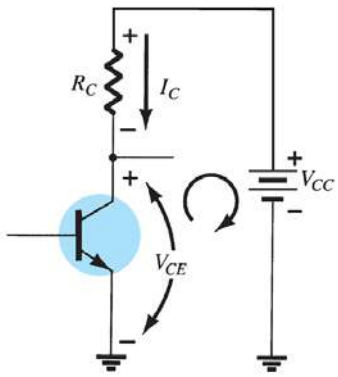

Copyright ©2015 Pearson Education, All Rights Reserved

$$I_B = 47.08\mu\text{A}$$

$$KVL: -V_{CC} + I_C R_C + V_{CE(SAT)} = 0$$

$$V_{CE(SAT)} \leq 0.2\text{V}$$

$$I_C = \beta I_B = 2.35\text{mA}$$

$$\Rightarrow R_C \geq \frac{V_{CC} - V_{CE(SAT)}}{I_C} = 5.02\text{k}\Omega$$

BJT – DC Analysis

- DC Circuits: Fixed Bias Circuit (cont.)

DC Power Analysis

Power consumed by the BJT:

$$P = V_{CE} I_C$$

Power generated by the source:

$$P_{CC} = V_{CC}(I_C + I_B)$$

Power dissipated by the resistors:

$$P_\Omega = P_{CC} - P$$

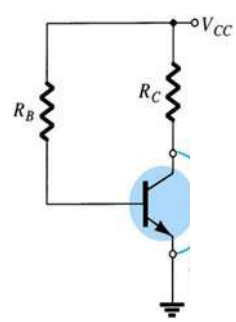

Copyright ©2015 Pearson Education, All Rights Reserved

BJT – DC Analysis

- Qn. 1 (cont.): Find the generated and dissipated powers.

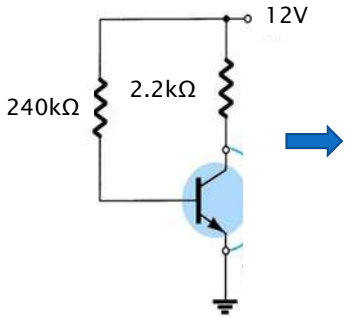

$$I_B = 47.08\mu A, I_C = \beta I_B = 2.35mA, V_{CE} = 6.83V$$

$$P = V_{CE} I_C = 16.05mW$$

$$P_{CC} = V_{CC}(I_C + I_B) = 28.77mW$$

$$P_{\Omega} = P_{CC} - P = 12.72mW$$

Copyright ©2015 Pearson Education, All Rights Reserved

BJT – DC Analysis

- DC Circuits: Emitter Stabilized Bias Circuit

1. Draw the DC equivalent circuit.

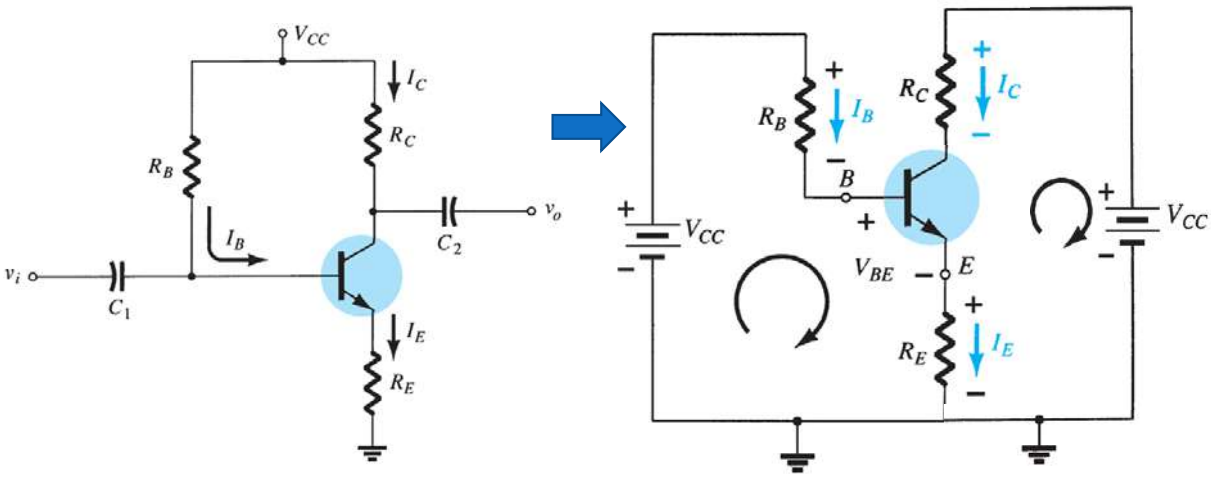

Copyright ©2015 Pearson Education, All Rights Reserved

BJT – DC Analysis

- DC Circuits: Emitter Stabilized Bias Circuit (cont.)

2. Write KVL for B–E junction.

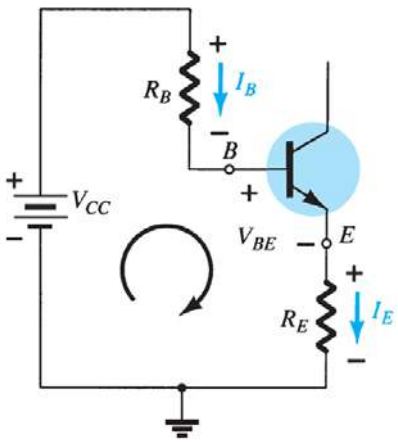

Copyright ©2015 Pearson Education, All Rights Reserved

$$KVL: -V_{CC} + I_B R_B + V_{BE} + I_E R_E = 0$$

$$I_C = \beta I_B, I_E = (\beta + 1) I_B$$

$$\Rightarrow -V_{CC} + I_B R_B + V_{BE} + (\beta + 1) I_B R_E = 0$$

$$\Rightarrow I_B = \frac{V_{CC} - V_{BE}}{R_B + (\beta + 1) R_E}$$

BJT – DC Analysis

- DC Circuits: Emitter Stabilized Bias Circuit (cont.)

3. Write KVL for C–E junction.

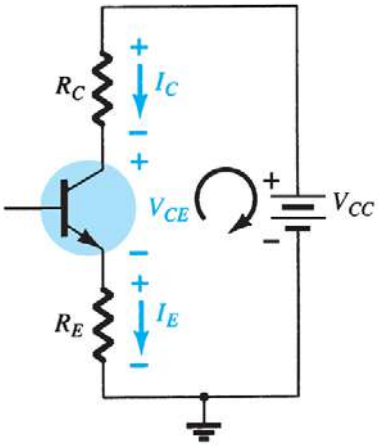

Copyright ©2015 Pearson Education, All Rights Reserved

$$KVL: -V_{CC} + I_C R_C + V_{CE} + I_E R_E = 0$$

$$I_C = \beta I_B, I_E = (\beta + 1) I_B$$

$$\Rightarrow -V_{CC} + \beta I_B R_C + V_{CE} + (\beta + 1) I_B R_E = 0$$

$$\Rightarrow V_{CE} = V_{CC} - I_B (\beta R_C + (\beta + 1) R_E)$$

$$\Rightarrow V_{CE} \cong V_{CC} - \beta I_B (R_C + R_E)$$

BJT – DC Analysis

- DC Circuits: Emitter Stabilized Bias Circuit (cont.)

Saturation Region

If $V_{CEQ} \leq V_{CEQ(SAT)}$ then the BJT is in saturation.

$$V_{CC} = V_{CE(\text{sat})} + I_{C(\text{sat})}R_C + I_{E(\text{sat})}R_E$$

$$V_{CE(\text{sat})} \cong 0.2\text{V}, I_{E(\text{sat})} \cong I_{C(\text{sat})}$$

$$\Rightarrow I_{C(\text{sat})} = \frac{V_{CC} - 0.2}{R_C + R_E}$$

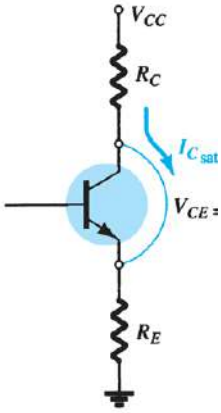

When I_{CQ} is higher than the saturation current found above we can say that the BJT is in saturation.

Copyright ©2015 Pearson Education, All Rights Reserved

BJT – DC Analysis

- Qn. 2: Find I_{BQ}, I_{CQ}, V_{CEQ}, V_B, V_C, and $I_{C(SAT)}$ ($V_{BE(ON)}$=0.7V, $V_{CE(SAT)}$=0.2V).

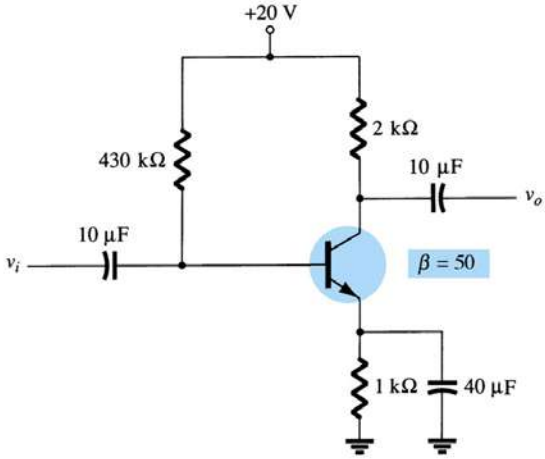

Copyright ©2015 Pearson Education, All Rights Reserved

BJT – DC Analysis

- Qn. 2 (cont.): Find I_{BQ}, I_{CQ}, V_{CEQ}, V_B, V_C, and $I_{C(SAT)}$ ($V_{BE(ON)}$=0.7V, $V_{CE(SAT)}$=0.2V).

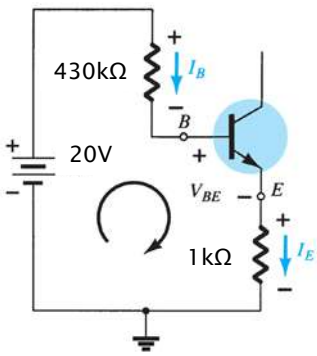

Copyright ©2015 Pearson Education, All Rights Reserved

$$KVL: -V_{CC} + I_B R_B + V_{BE} + \underbrace{I_E}_{(\beta+1)I_B} R_E = 0$$

$$\Rightarrow I_B = \frac{V_{CC} - V_{BE}}{R_B + (\beta+1)R_E} = 40.13\mu\text{A}$$

$$I_C = \beta I_B = 2.01\text{mA}$$
$$I_E = (\beta+1)I_B = 2.05\text{mA}$$
$$I_E \cong I_C$$

$$V_E = I_E R_E = 2.05\text{V}$$
$$V_{BE} = V_B - V_E = 0.7\text{V}$$
$$\Rightarrow V_B = 2.75\text{V}$$

BJT – DC Analysis

- Qn. 2 (cont.): Find I_{BQ}, I_{CQ}, V_{CEQ}, V_B, V_C, and $I_{C(SAT)}$ ($V_{BE(ON)}$=0.7V, $V_{CE(SAT)}$=0.2V).

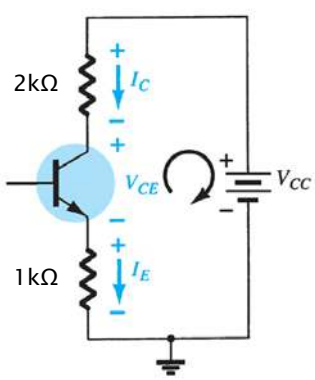

Copyright ©2015 Pearson Education, All Rights Reserved

$$I_B = 40.13\mu\text{A},\quad I_C = \beta I_B = 2.01\text{mA},\quad I_E = (\beta+1)I_B = 2.05\text{mA}$$

$$KVL: -V_{CC} + I_C R_C + V_{CE} + I_E R_E = 0$$

$$\Rightarrow V_{CE} = V_{CC} - \beta I_B R_C - (\beta+1)I_B R_E = 13.93\text{V}$$

BJT – DC Analysis

- Qn. 2 (cont.): Find I_{BQ}, I_{CQ}, V_{CEQ}, V_B, V_C, and $I_{C(SAT)}$ ($V_{BE(ON)}$=0.7V, $V_{CE(SAT)}$=0.2V).

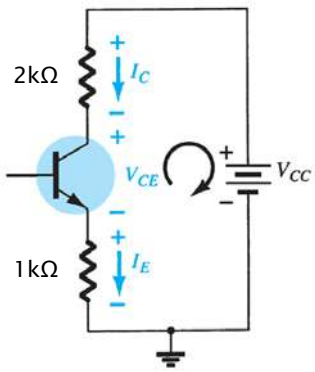

Copyright ©2015 Pearson Education, All Rights Reserved

$$KVL: -V_{CC} + I_{C(SAT)}R_C + V_{CE(SAT)} + I_{E(SAT)}R_E = 0$$

$$V_{CE(\text{sat})} = 0.2\text{V}, I_{E(\text{sat})} \cong I_{C(\text{sat})}$$

$$\Rightarrow I_{C(SAT)} = \frac{V_{CC} - V_{CE(SAT)}}{R_C + R_E} = 6.6\text{mA}$$

BJT – DC Analysis

- Qn. 3: For the Voltage Divider Bias shown below find I_{BQ}, I_{CQ}, V_{CEQ}, V_B, V_C, and $I_{C(SAT)}$ ($V_{BE(ON)}$=0.7V, $V_{CE(SAT)}$=0.2V).

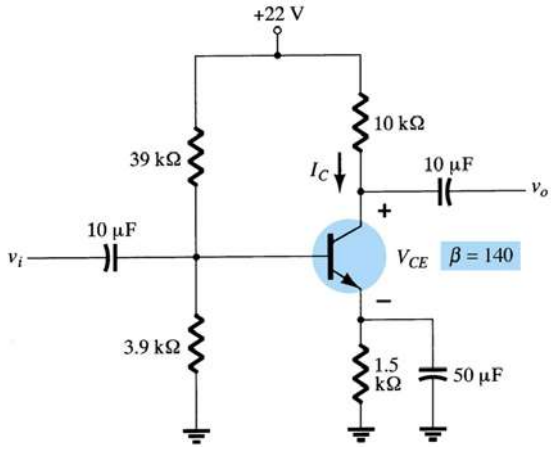

Copyright ©2015 Pearson Education, All Rights Reserved

BJT – DC Analysis

- Qn. 3 (cont.): Find I_{BQ}, I_{CQ}, V_{CEQ}, V_B, V_C, and $I_{C(SAT)}$ ($V_{BE(ON)}$=0.7V, $V_{CE(SAT)}$=0.2V).

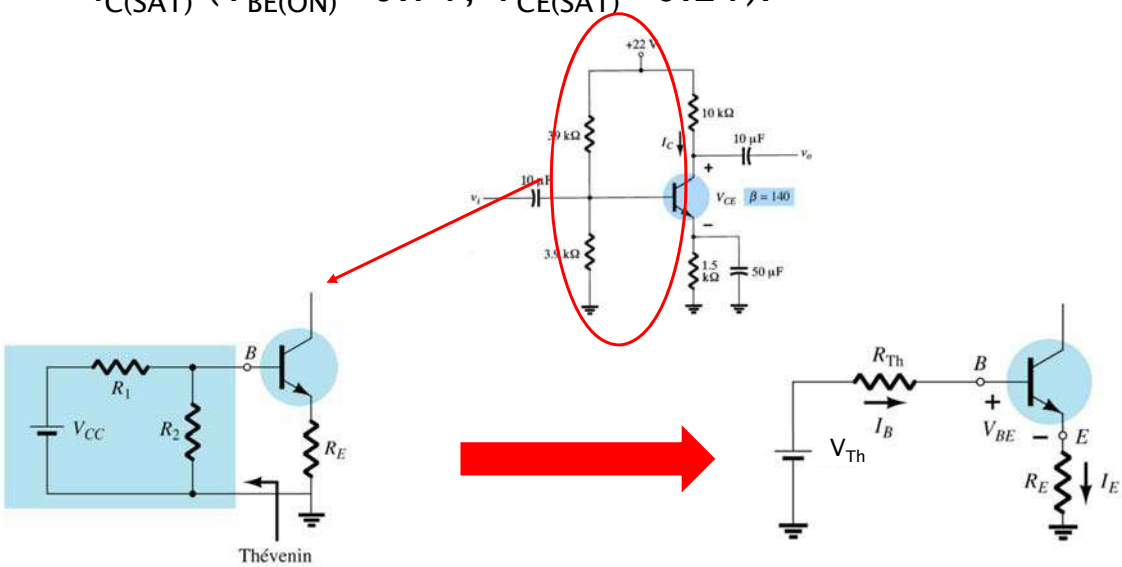

Copyright ©2015 Pearson Education, All Rights Reserved

BJT – DC Analysis

- Qn. 3 (cont.): Find I_{BQ}, I_{CQ}, V_{CEQ}, V_B, V_C, and $I_{C(SAT)}$ ($V_{BE(ON)}$=0.7V, $V_{CE(SAT)}$=0.2V).

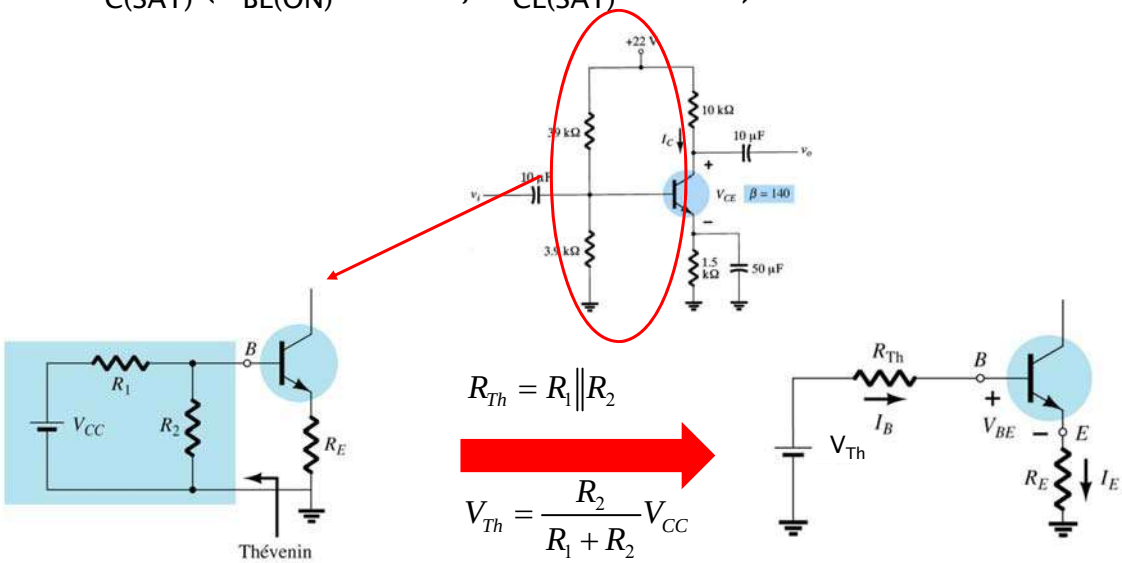

$$R_{Th} = R_1 \| R_2$$

$$V_{Th} = \frac{R_2}{R_1 + R_2} V_{CC}$$

Copyright ©2015 Pearson Education, All Rights Reserved

BJT – DC Analysis

- Qn. 3 (cont.): Find I_{BQ}, I_{CQ}, V_{CEQ}, V_B, V_C, and $I_{C(SAT)}$ ($V_{BE(ON)}$=0.7V, $V_{CE(SAT)}$=0.2V).

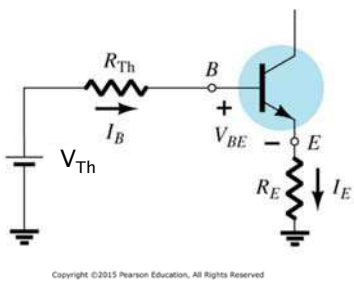

$$KVL: -V_{Th} + I_B R_{Th} + V_{BE} + \underbrace{I_E}_{(\beta+1)I_B} R_E = 0$$

$$I_B = \frac{V_{Th} - V_{BE}}{R_{Th} + (\beta+1)R_E} = 6.05\mu\text{A}$$

$$I_C = \beta I_B = 0.85\text{mA}$$
$$I_E = (\beta+1)I_B = 0.853\text{mA}$$

$$R_{Th} = 39k \| 3.9k = 3.55\text{k}\Omega$$

$$V_{Th} = \frac{3.9}{39+3.9}22 = 2\text{V}$$

$$V_E = I_E R_E = 1.28\text{V}$$
$$V_{BE} = V_B - V_E = 0.7\text{V}$$
$$\Rightarrow V_B = 1.98\text{V}$$

BJT – DC Analysis

- Qn. 3 (cont.): Find I_{BQ}, I_{CQ}, V_{CEQ}, V_B, V_C, and $I_{C(SAT)}$ ($V_{BE(ON)}$=0.7V, $V_{CE(SAT)}$=0.2V).

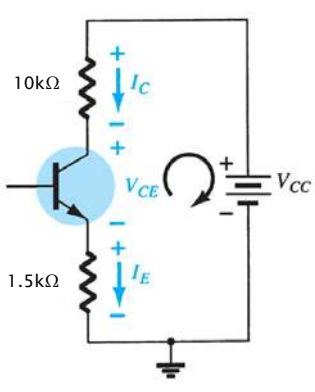

$$I_B = 6.05\mu\text{A}, \quad I_C = 0.85\text{mA}, \quad I_E = 0.853\text{mA}$$

$$KVL: -V_{CC} + I_C R_C + V_{CE} + I_E R_E = 0$$

$$\Rightarrow V_{CE} = V_{CC} - \beta I_B R_C - (\beta+1) I_B R_E = 12.22\text{V}$$

For saturation

$$KVL: -V_{CC} + I_{C(SAT)} R_C + V_{CE(SAT)} + I_{E(SAT)} R_E = 0$$

$$\Rightarrow I_{C(SAT)} = \frac{V_{CC} - V_{CE(SAT)}}{R_C + R_E} = 1.90\text{mA}$$

BJT – DC Analysis

- Qn. 4: For the Voltage Feedback Bias shown below find I_{BQ}, I_{CQ}, V_{CEQ}, V_B, V_C, and $I_{C(SAT)}$ ($V_{BE(ON)}$=0.7V, $V_{CE(SAT)}$=0.2V).

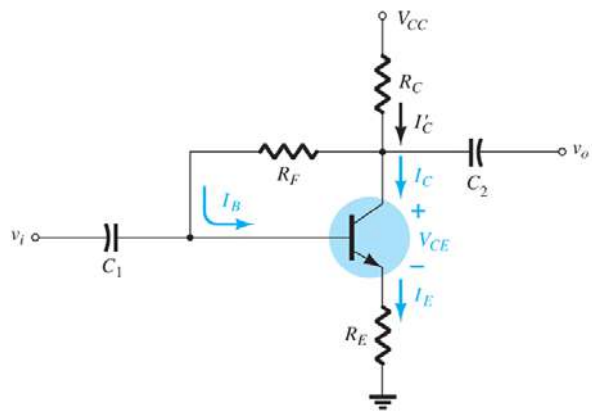

Copyright ©2015 Pearson Education, All Rights Reserved

BJT – DC Analysis

- Qn. 4 (cont.): Find I_{BQ}, I_{CQ}, V_{CEQ}, V_B, V_C, and $I_{C(SAT)}$ ($V_{BE(ON)}$=0.7V, β=90).

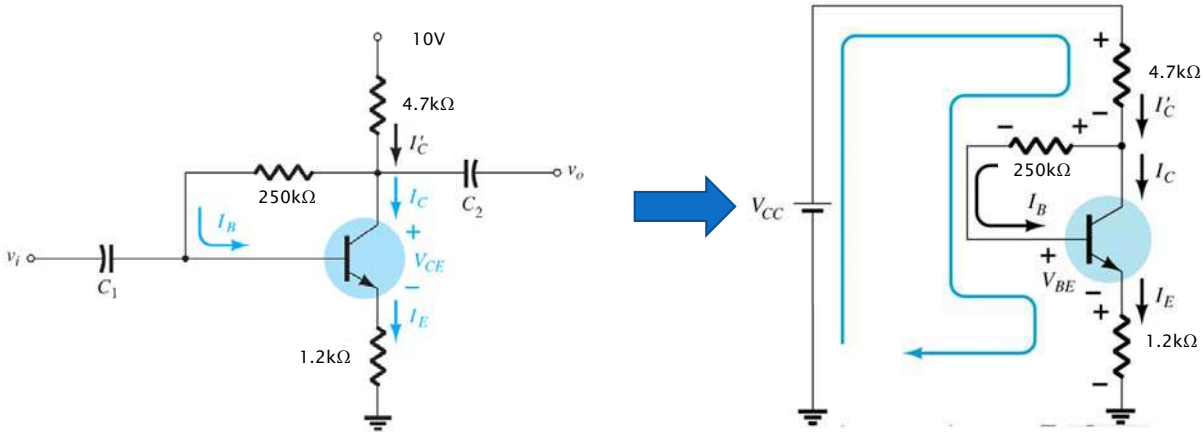

Copyright ©2015 Pearson Education, All Rights Reserved

BJT – DC Analysis

- Qn. 4 (cont.): Find I_{BQ}, I_{CQ}, V_{CEQ}, V_B, V_C, and $I_{C(SAT)}$ ($V_{BE(ON)}$=0.7V, $V_{CE(SAT)}$=0.2V , β=90).

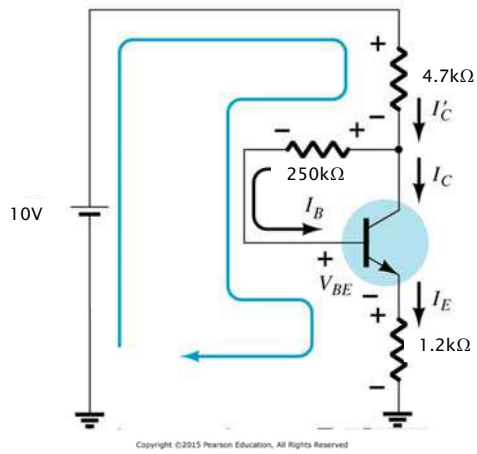

$$KCL: I'_C = I_C + I_B = (\beta+1)I_B$$

$$KVL: -V_{CC} + I'_C R_C + I_B R_B + V_{BE} + I_E R_E = 0$$

$$I_B = \frac{V_{CC} - V_{BE}}{R_B + (\beta+1)R_C + (\beta+1)R_E} = 11.82\mu\text{A}$$

$$I_C = \beta I_B = 1.06\text{mA}$$

$$I_E = (\beta+1)I_B = 1.08\text{mA}$$

$$I'_C = (\beta+1)I_B = 1.08\text{mA}$$

BJT – DC Analysis

- Qn. 4 (cont.): Find I_{BQ}, I_{CQ}, V_{CEQ}, V_B, V_C, and $I_{C(SAT)}$ ($V_{BE(ON)}$=0.7V, $V_{CE(SAT)}$=0.2V , β=90).

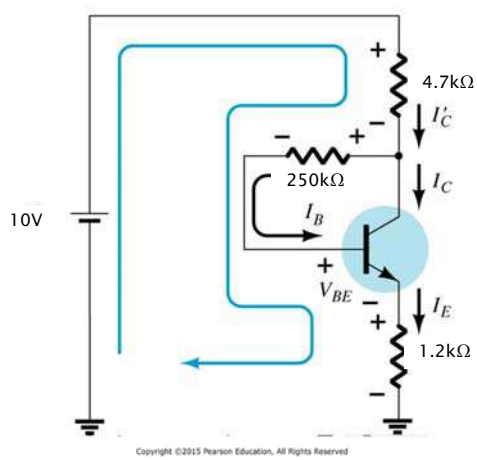

$$I_B = 11.82\mu\text{A}, I_C = 1.06\text{mA}, I_E = I'_C = 1.08\text{mA}$$

$$KVL: -V_{CC} + I'_C R_C + V_{CE} + I_E R_E = 0$$

$$\Rightarrow V_{CE} = 3.63\text{V}$$

For saturation

$$KVL: -V_{CC} + I'_{C(SAT)} R_C + V_{CE(SAT)} + I_{E(SAT)} R_E = 0$$

$$\Rightarrow I'_{C(SAT)} = \frac{V_{CC} - V_{CE(SAT)}}{R_C + R_E} = 1.66\text{mA} \Rightarrow I_{C(SAT)} = 1.64\text{mA}$$

BJT – DC Analysis

- Use Cases of BJTs:
  - Switch – Inverter Logic Gate

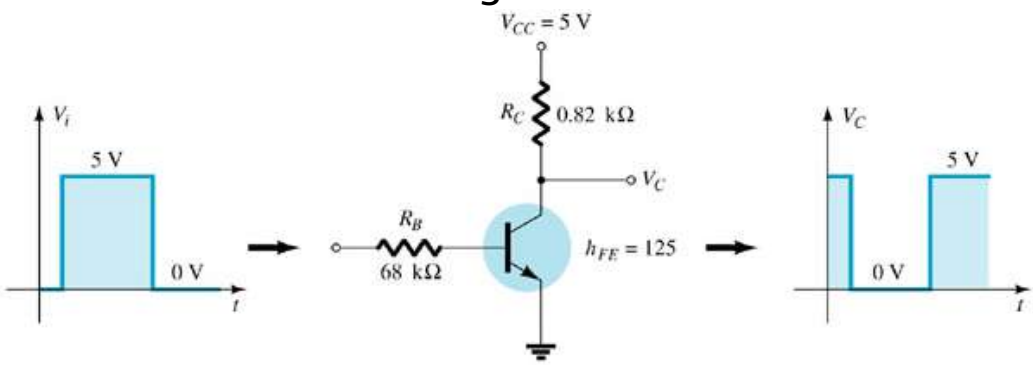

Copyright ©2015 Pearson Education, All Rights Reserved

When input is Low BJT is in Cut-Off -> Output is High.
When input is Low BJT is in Saturation -> Output is Low.

$$I_{C(SAT)} \cong V_{CC} / R_C \qquad \Rightarrow I_B = \frac{V_{in} - V_{BE(ON)}}{R_B} \geq \frac{I_{C(SAT)}}{\beta}$$

BJT – DC Analysis

- Use Cases of BJTs :
  - Logic Gates

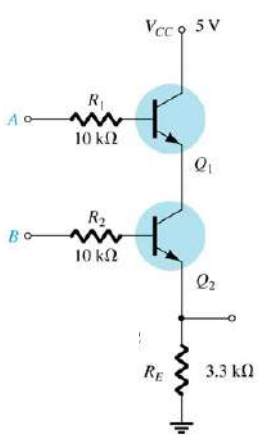

A	B	C
0	0	?
0	1	
1	0	
1	1	

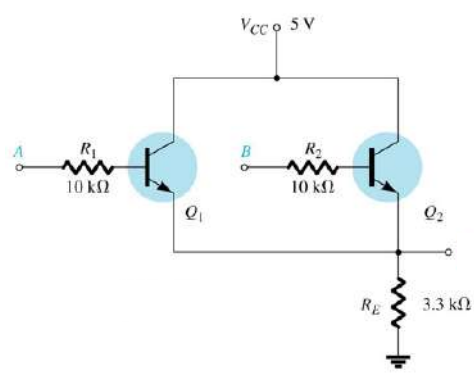

A	B	C
0	0	?
0	1	
1	0	
1	1	

1 = high
0 = low

Copyright ©2015 Pearson Education, All Rights Reserved

BJT – DC Analysis

- Use Cases of BJTs :
  - Logic Gates

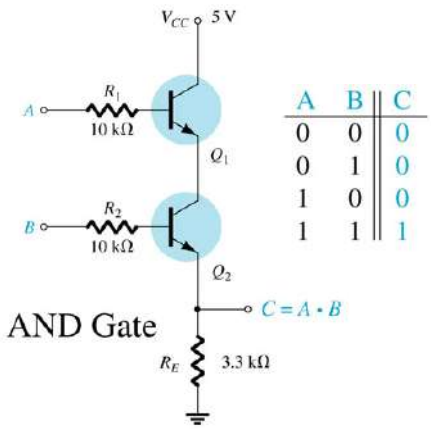

A	B	C
0	0	0
0	1	0
1	0	0
1	1	1

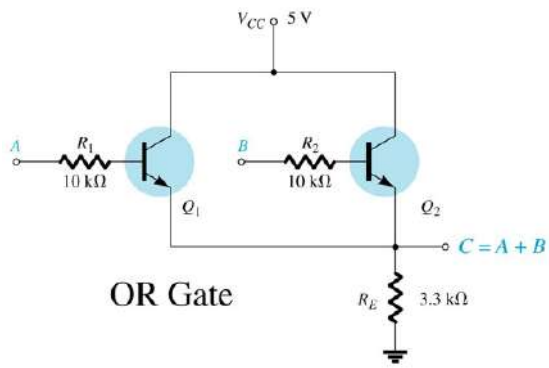

A	B	C
0	0	0
0	1	1
1	0	1
1	1	1

1 = high
0 = low

Copyright ©2015 Pearson Education, All Rights Reserved

Course Content

- ~~Circuit Components and Variables, Ohm's Law and Kirchoff's Laws~~
- ~~Circuit Analysis Techniques I - Node Voltage & Mesh Current Methods~~
- ~~Circuit Analysis Techniques II - Thevenin and Norton Equivalent Circuits~~
- ~~First Order RL and RC Circuits~~
- ~~Phasor Concept and AC Analysis of Circuits~~
- Midterm
- ~~Introduction to Semiconductors~~
- ~~Diode Applications~~
- ~~BJT~~ Analysis
- FET Analysis
- Operational Amplifier
- Midterm
- Logic Gates
- Make-up Exams

ELE 296 Basic Electric Circuits and Electronics

- BJT – AC Analysis
  - BJT Small Signal Equivalent Circuit
  - BJT AC Voltage Gain
  - The Effect of Load and Source Resistance to the Gain

BJT – AC Analysis

- Steps to Follow for the AC Analysis of BJTs

1. Define the input and output voltages and currents.
2. Draw the AC equivalent circuit.
   Capacitors are short, inductors are open circuit.
   DC voltage sources are short circuit,
   DC current sources are open circuit.
3. Replace the BJT with its Small Signal AC Equivalent Circuit.
4. Find the voltage gain by calculating the input and output voltages as a function of I_b and Beta.

BJT – AC Analysis

- Draw the AC equivalent circuit

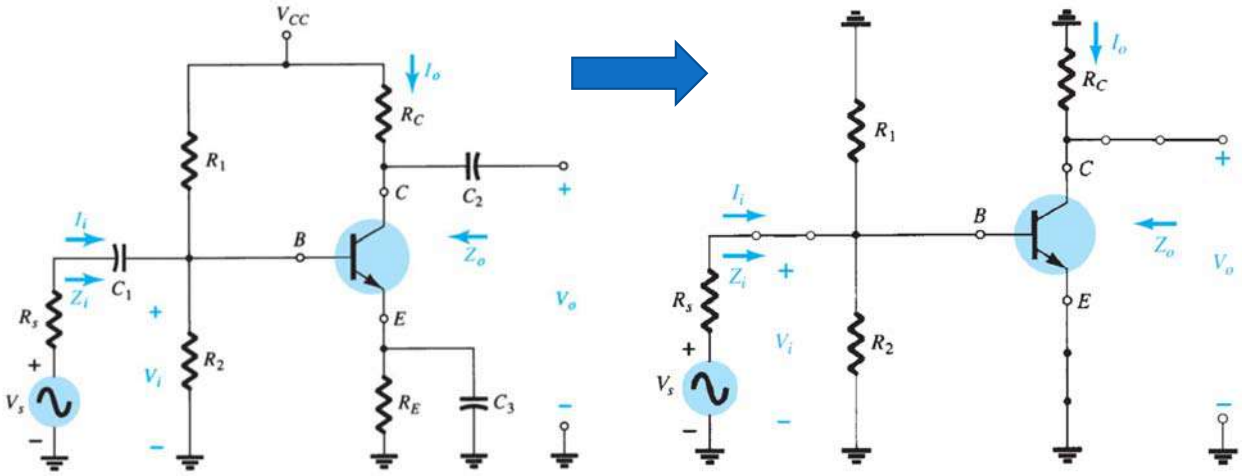

Copyright ©2015 Pearson Education, All Rights Reserved

BJT – AC Analysis

- Replace the BJT with its Small Signal AC Equivalent Circuit

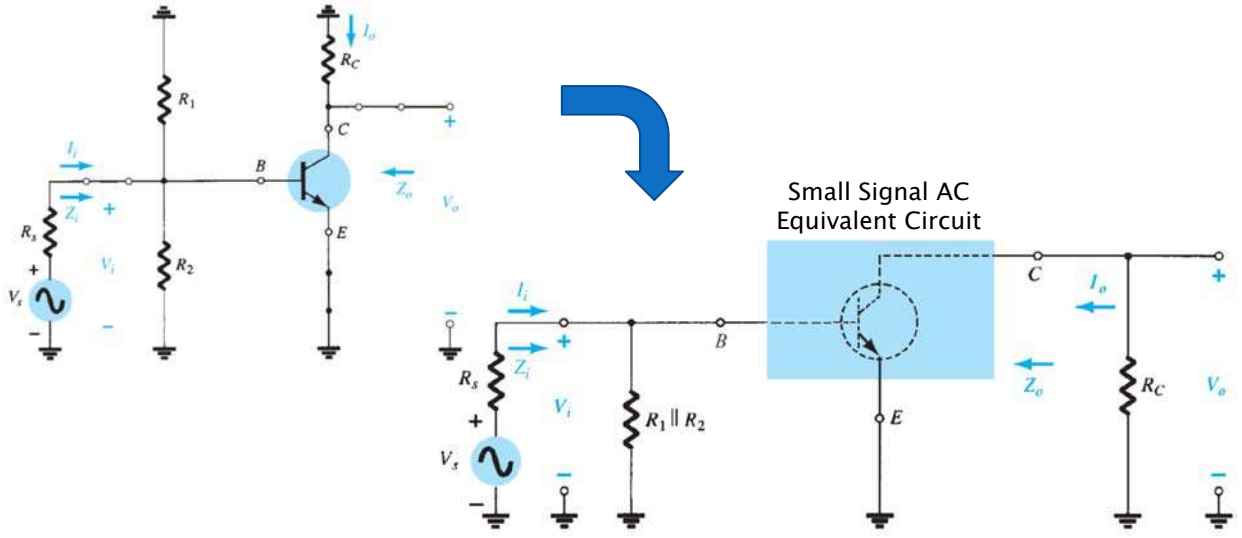

Copyright ©2015 Pearson Education, All Rights Reserved

BJT – AC Analysis

- Replace the BJT with its Small Signal AC Equivalent Circuit (cont.)

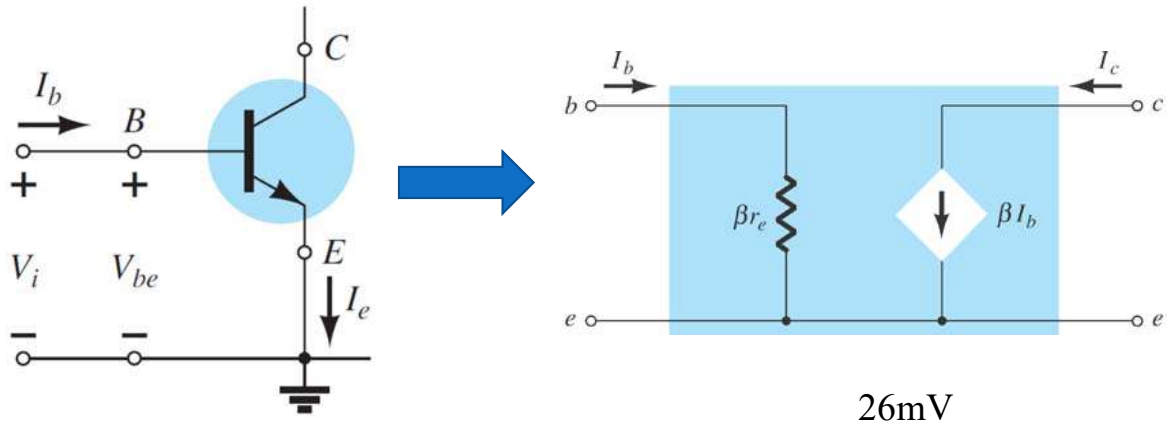

$$r_e = \frac{26\text{mV}}{I_e}$$

Copyright ©2015 Pearson Education, All Rights Reserved

BJT – AC Analysis

- Replace the BJT with its Small Signal AC Equivalent Circuit (cont.)

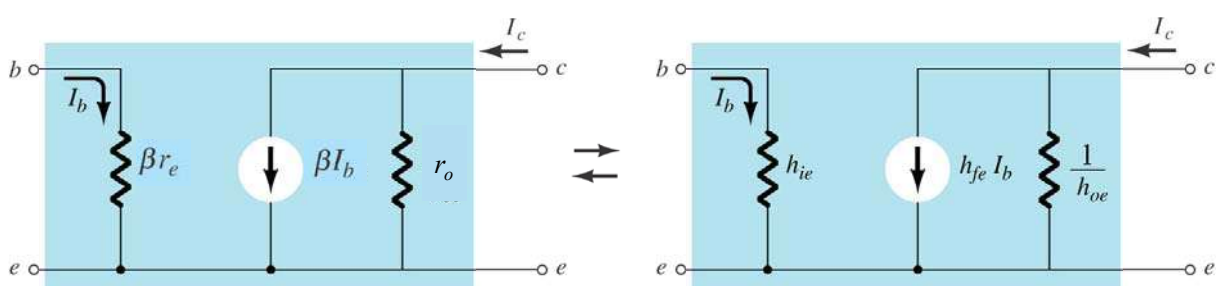

$$h_{ie} = \beta r_e, \quad h_{fe} = \beta_{ac}, \quad h_{oe} = \frac{1}{r_o}$$

Copyright ©2015 Pearson Education, All Rights Reserved

BJT – AC Analysis

- Find the voltage gain:

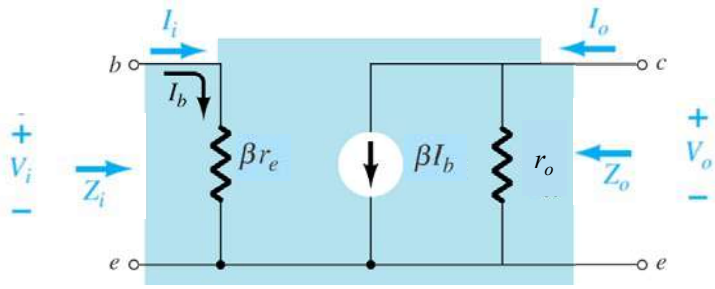

Giriş Empedansı

$$Z_i = \frac{V_i}{I_i}$$

Çıkış Empedansı

$$Z_o = \frac{V_o}{I_o}$$

Gerilim Kazancı

$$A_v = \frac{V_o}{V_i}$$

Copyright ©2015 Pearson Education, All Rights Reserved

BJT – AC Analysis

- Fixed Bias Circuit

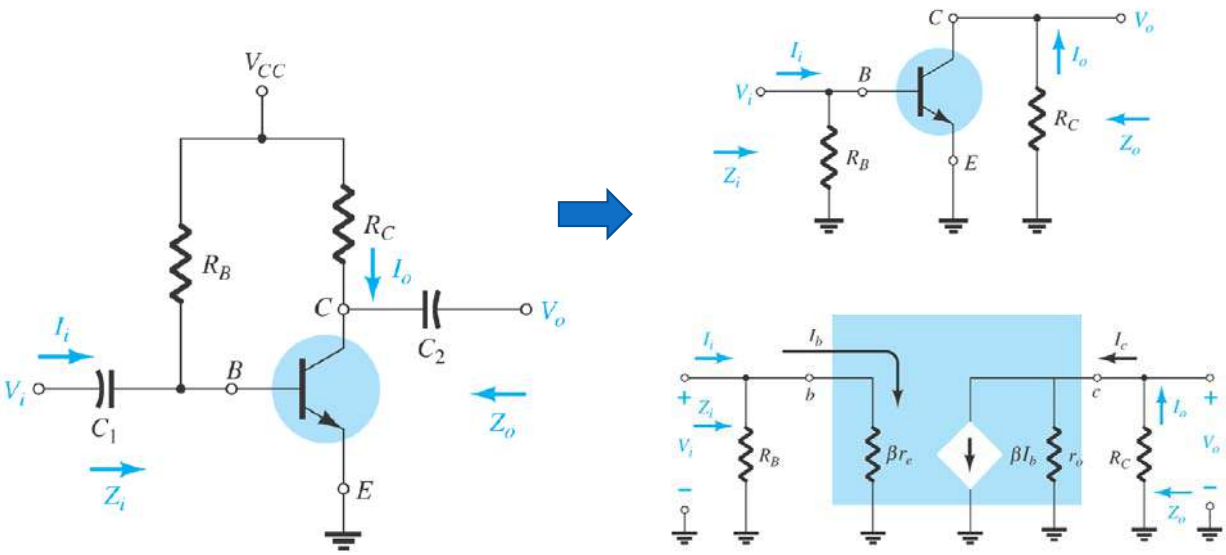

Copyright ©2015 Pearson Education, All Rights Reserved

BJT – AC Analysis

- Fixed Bias Circuit (cont.)

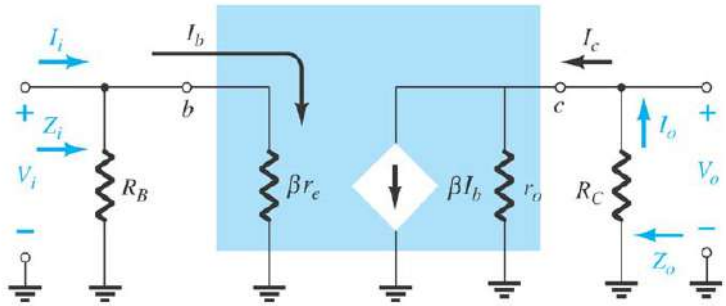

Input Impedance

$$Z_i = R_B \| \beta r_e$$

$$R_E \geq 10\beta r_e \;\Rightarrow\; Z_i \cong \beta r_e$$

$$r_e = \frac{26\text{mV}}{I_e}$$

Output Impedance

$$Z_o = R_C \| r_o$$

$$r_o \geq 10 R_C \;\Rightarrow\; Z_o \cong R_C$$

Copyright ©2015 Pearson Education, All Rights Reserved

BJT – AC Analysis

- Fixed Bias Circuit (cont.)

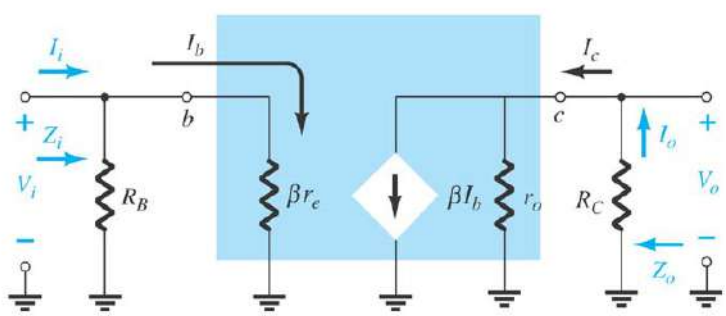

Input Voltage

$$V_i = I_b \beta r_e$$

Output Voltage

$$V_o = -\beta I_b Z_o = -\beta I_b \frac{r_o}{r_o + R_C} R_C$$

Copyright ©2015 Pearson Education, All Rights Reserved

BJT – AC Analysis

- Fixed Bias Circuit (cont.)

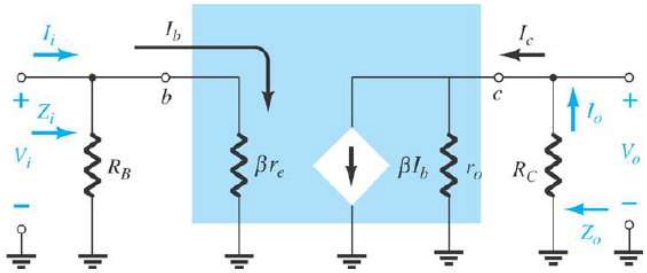

Copyright ©2015 Pearson Education, All Rights Reserved

Voltage Gain: DO NOT MEMORIZE!!!

$$A_v = \frac{V_o}{V_i} = -\frac{\beta I_b \dfrac{r_o}{r_o + R_C} R_C}{\beta I_b r_e} = -\frac{r_o}{r_o + R_C}\frac{R_C}{r_e}$$

BJT – AC Analysis

- Fixed Bias Circuit (cont.)

Phase Difference: Since the voltage gain is negative, a phase difference of 180° will occur in the output.

$$A_v = \frac{V_o}{V_i} = -\frac{r_o}{r_o + R_C}\frac{R_C}{r_e}$$

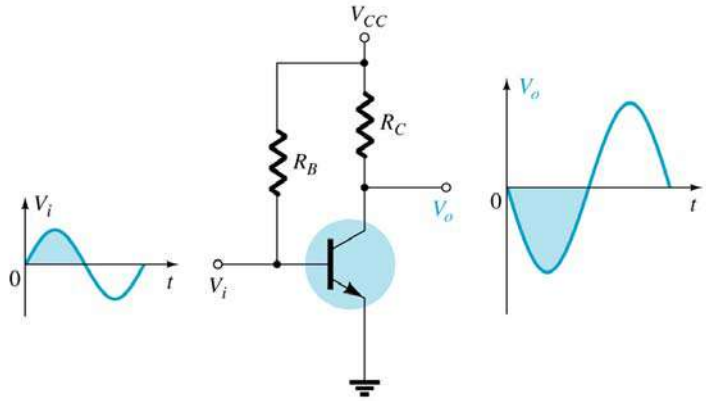

Copyright ©2015 Pearson Education, All Rights Reserved

BJT – AC Analysis

- Qn. 1: Find r_e, Z_i, Z_o, and A_v for AC analysis.

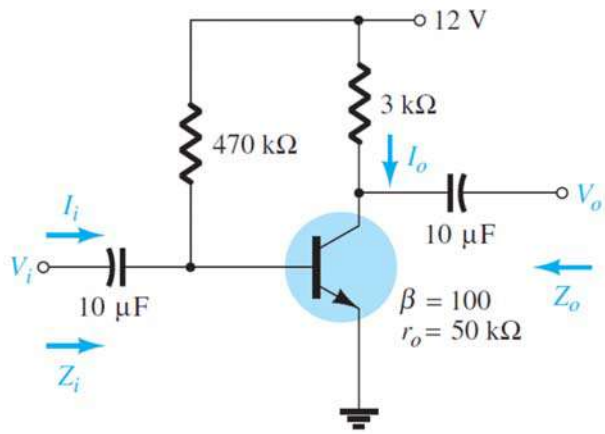

Copyright ©2015 Pearson Education, All Rights Reserved

BJT – AC Analysis

- Qn. 1 (cont.): Find r_e, Z_i, Z_o, and A_v for AC analysis.

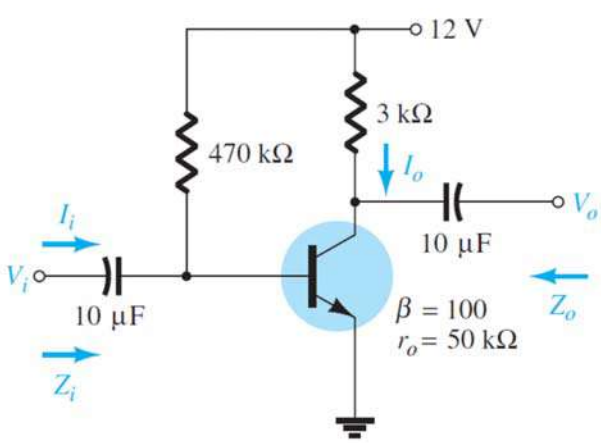

DC Analysis:

$$KVL: -12 + I_B 470k\Omega + V_{BE} = 0$$
$$\Rightarrow I_B = 24.04\mu\text{A}$$
$$\Rightarrow I_E = (\beta + 1) I_B = 2.43\text{mA}$$

AC Analysis:

$$r_e = \frac{26\text{mV}}{I_E} = 10.71\Omega$$

Copyright ©2015 Pearson Education, All Rights Reserved

BJT – AC Analysis

- Qn. 1 (cont.): Find r_e, Z_i, Z_o, and A_v for AC analysis.

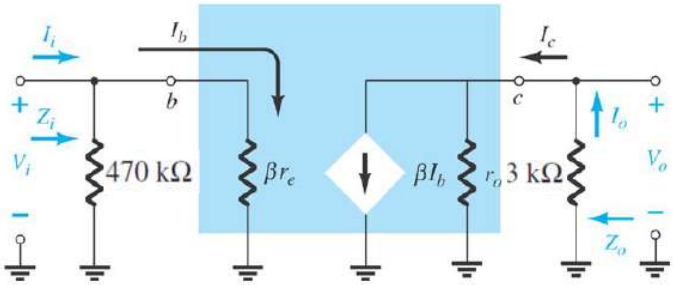

$$r_e = 10.71\Omega$$
$$r_o = 50\text{k}\Omega$$
$$\beta = 100$$

AC Analysis:

$$Z_i = 470\text{k} \| \beta r_e = 470\text{k} \| 1.071\text{k}$$
$$= 1.07\text{k}\Omega$$
$$Z_o = 3\text{k} \| r_o = 3\text{k} \| 50\text{k} = 2.83\text{k}\Omega$$

$$A_v = \frac{V_o}{V_i} = -\frac{r_o}{r_o + R_C}\frac{R_C}{r_e}$$
$$\Rightarrow A_v = -\frac{50k}{53k}\frac{3k}{10.71} = -264.3$$

Copyright ©2015 Pearson Education, All Rights Reserved

BJT – AC Analysis

- Qn. 1 (cont.): Let's compare the gain with a simulation.

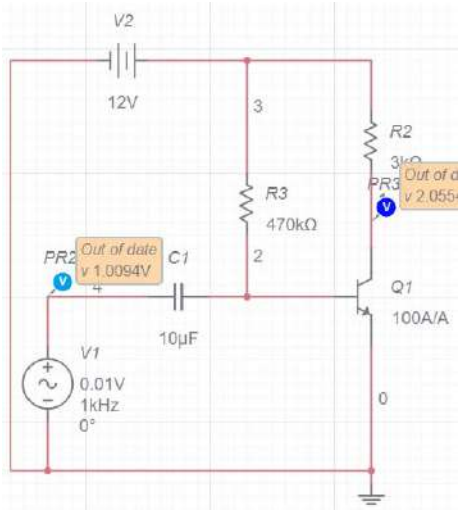

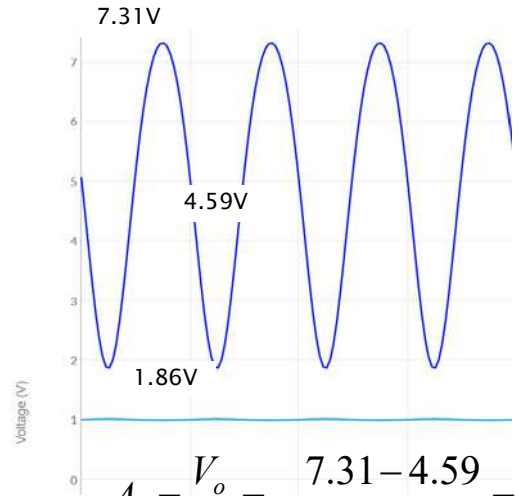

$$V_{CEQ} = 4.78\text{V}$$

$$A_v = \frac{V_o}{V_i} = -\frac{7.31 - 4.59}{0.01} = 272$$

Multisim Live ile Simüle Edilmiştir.

BJT – AC Analysis

- Qn. 1 (cont.): Let's compare the gain with another simulation.

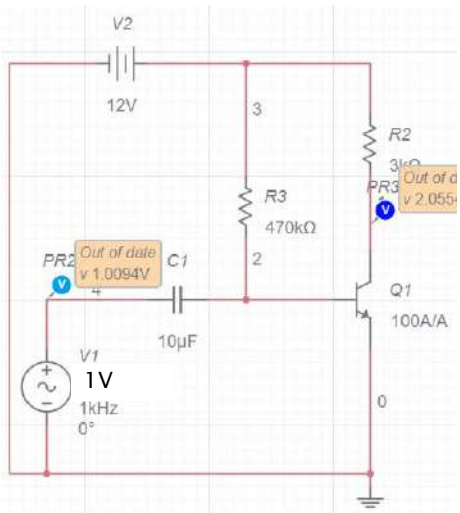

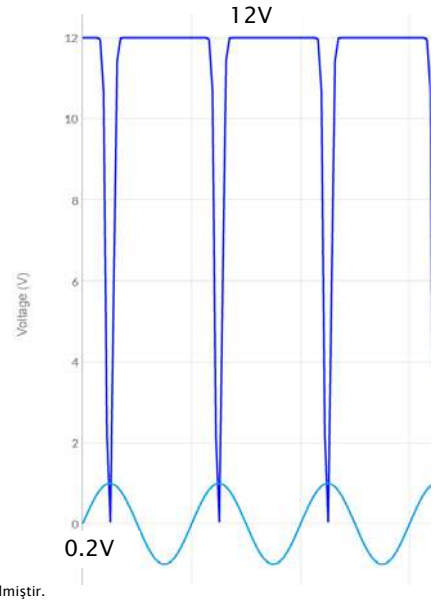

Multisim Live ile Simüle Edilmiştir.

BJT – AC Analysis

- The Effect of Load and Source Resistances

When resistors are connected to either source or to load terminals the voltage gain will DROP.

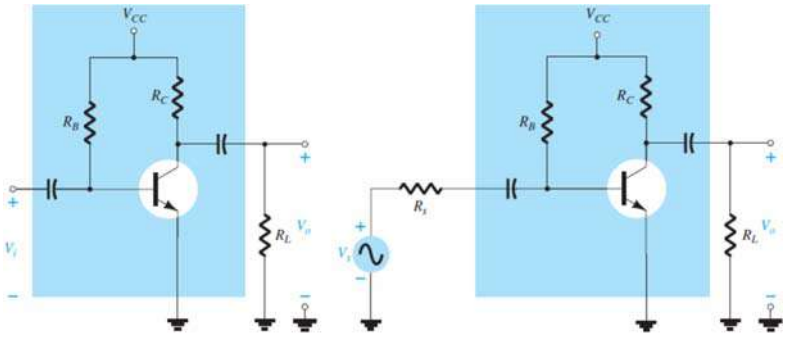

Copyright ©2015 Pearson Education, All Rights Reserved

BJT – AC Analysis

- Qn. 1 (cont.): Re-calculate A_v when there is a 3kΩ resistor in the load (output terminal).

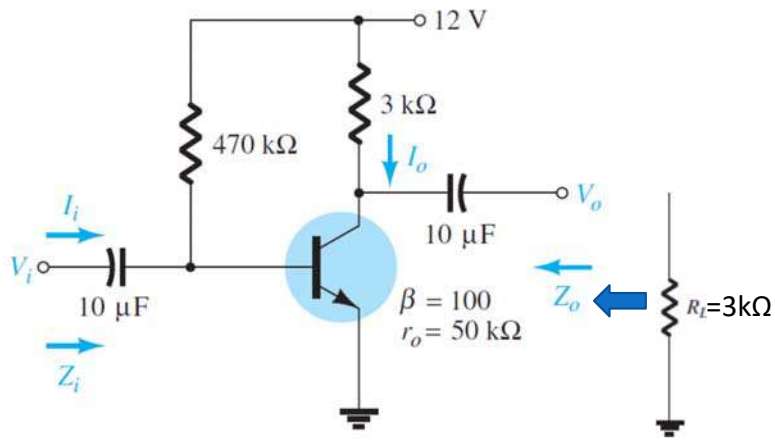

Copyright ©2015 Pearson Education, All Rights Reserved

BJT – AC Analysis

- Qn. 1 (cont.): Re-calculate A_v when there is a 3kΩ resistor in the load (output terminal).

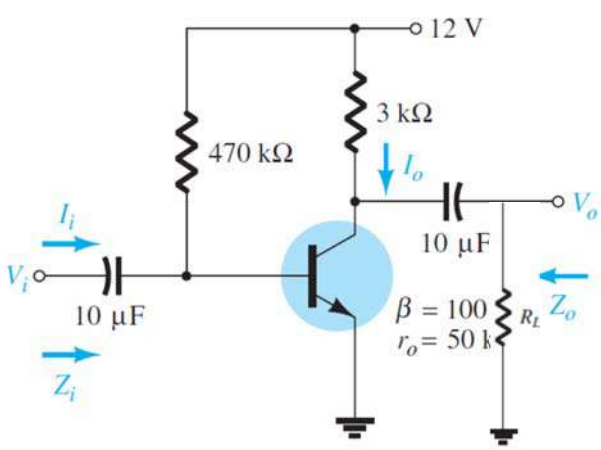

DC Analysis:

$$KVL: -12 + I_B 470k\Omega + V_{BE} = 0$$

$$\Rightarrow I_B = 24.04\mu\text{A}$$

$$\Rightarrow I_E = (\beta + 1) I_B = 2.43\text{mA}$$

AC Analysis:

$$r_e = \frac{26\text{mV}}{I_E} = 10.71\Omega$$

Copyright ©2015 Pearson Education, All Rights Reserved

BJT – AC Analysis

- Qn. 1 (cont.): Re-calculate A_v when there is a 3kΩ resistor in the load (output terminal).

AC Analysis:

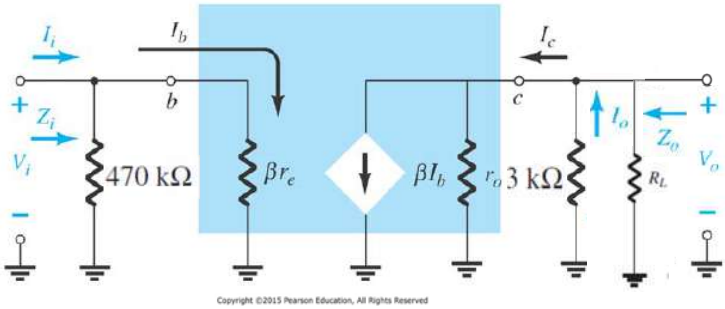

$$Z_i = 470\text{k}\|\beta r_e = 470\text{k}\|1.071\text{k}$$
$$= 1.07\text{k}\Omega$$
$$Z_o = 3\text{k}\|r_o\|R_L = 3\text{k}\|50\text{k}\|3\text{k} = 1.46\text{k}\Omega$$

$$V_i = I_b \beta r_e \qquad V_o = -\beta I_b Z_o = \beta I_b \left(R_C \| r_o \| R_L\right)$$

$$A_v = \frac{V_o}{V_i} = -\frac{R_C \| r_o \| R_L}{r_e}$$
$$\Rightarrow A_v = -\frac{1.46k}{10.71} = -136.3$$

BJT – AC Analysis

- Qn. 2: Find r_e, Z_i, Z_o, and A_v for the Voltage Divider Bias Circuit below.

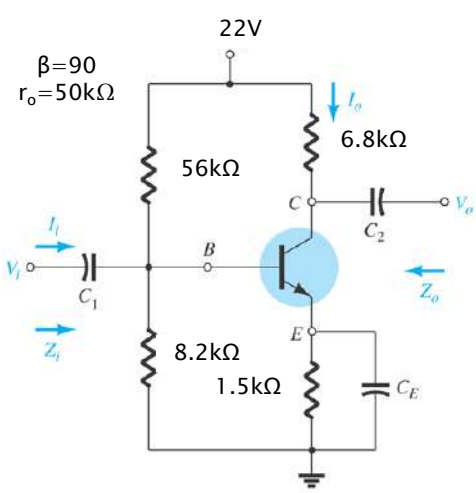

BJT – AC Analysis

- Qn. 2 (cont.): Find r_e, Z_i, Z_o, and A_v for the Voltage Divider Bias Circuit below.

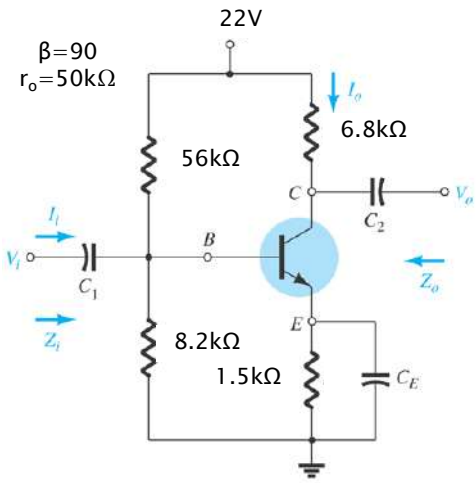

DC Analysis:

$$R_{Th} = R_1 \| R_2 = 7.15\text{k}\Omega$$

$$V_{Th} = V_{CC}\frac{R_2}{R_1+R_2} = 2.81\text{V}$$

$$KVL: -2.81 + I_B 7.15\text{k}\Omega + V_{BE} + (\beta+1)I_B 1.5\text{k}\Omega = 0$$

$$\Rightarrow I_B = 14.69\mu\text{A}$$

$$\Rightarrow I_E = (\beta+1)I_B = 1.34\text{mA}$$

AC Analysis:

$$r_e = \frac{26\text{mV}}{I_E} = 19.4\Omega$$

Copyright ©2015 Pearson Education, All Rights Reserved

BJT – AC Analysis

- Qn. 2 (cont.): Find r_e, Z_i, Z_o, and A_v for the Voltage Divider Bias Circuit below.

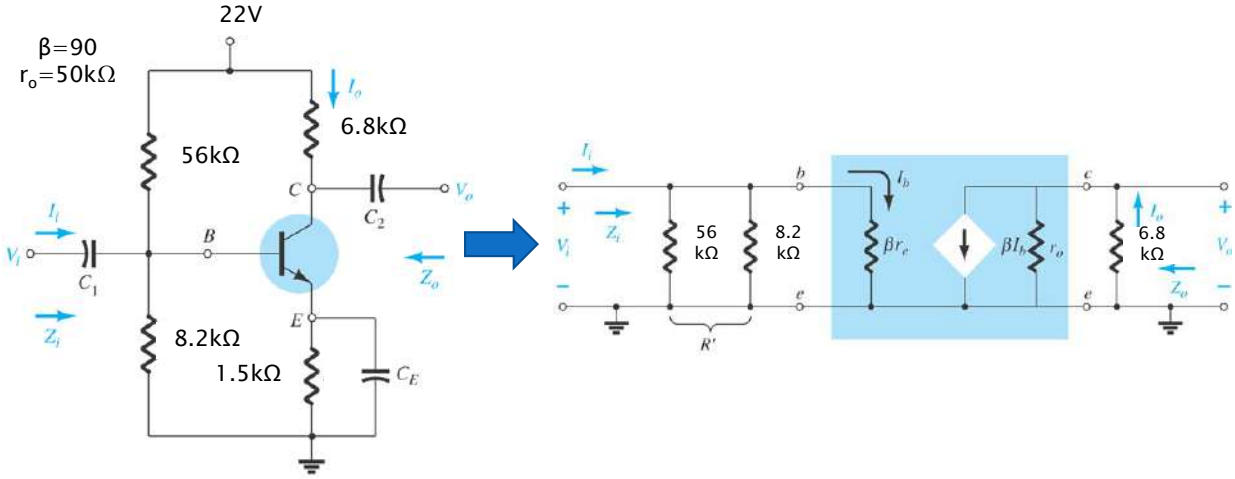

Copyright ©2015 Pearson Education, All Rights Reserved

BJT – AC Analysis

- Qn. 2 (cont.): Find r_e, Z_i, Z_o, and A_v for the Voltage Divider Bias Circuit below.

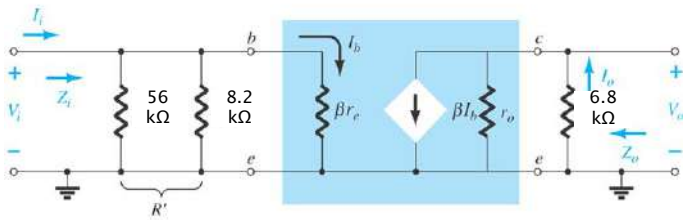

$$r_e = 19.4\Omega$$
$$r_o = 50\text{k}\Omega$$
$$\beta = 90$$

AC Analysis:

$$Z_i = 56\text{k}\|8.2\text{k}\|\beta r_e = 56\text{k}\|8.2\text{k}\|1.75\text{k}$$
$$= 1.41\text{k}\Omega$$
$$Z_o = 6.8\text{k}\|r_o = 6.8\text{k}\|50\text{k} = 5.99\text{k}\Omega$$

$$V_o = -\beta I_b Z_o = -\beta I_b \frac{r_o}{r_o + R_C} R_C$$
$$V_i = I_b \beta r_e$$

Copyright ©2015 Pearson Education, All Rights Reserved

BJT – AC Analysis

- Qn. 2 (cont.): Find r_e, Z_i, Z_o, and A_v for the Voltage Divider Bias Circuit below.

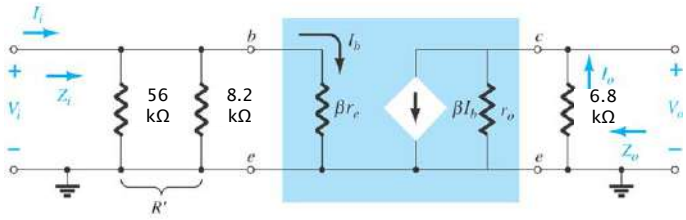

$$r_e = 19.4\Omega$$
$$r_o = 50\text{k}\Omega$$
$$\beta = 90$$

AC Analysis:

$$A_v = \frac{V_o}{V_i} = \frac{-\beta I_b \dfrac{r_o}{r_o + R_C} R_C}{I_b \beta r_e} = -\frac{r_o}{r_o + R_C}\frac{R_C}{r_e} = 308.6$$

Copyright ©2015 Pearson Education, All Rights Reserved

BJT – AC Analysis

- Fixed Bias Circuit without the Emitter Capacitor

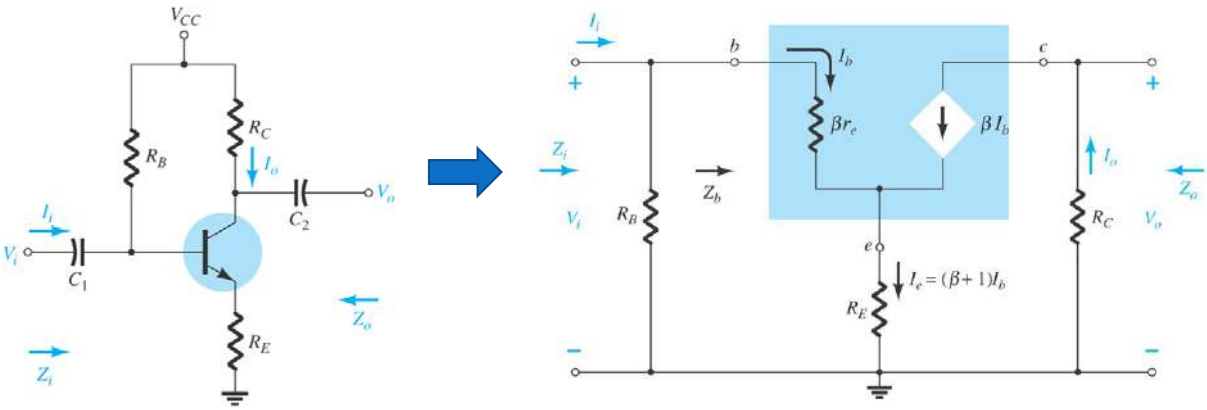

Copyright ©2015 Pearson Education, All Rights Reserved

BJT – AC Analysis

- Fixed Bias Circuit without the Emitter Capacitor (cont.)

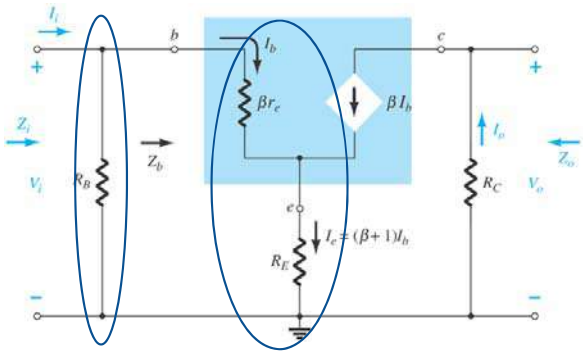

$Z_1 = R_B$ $\quad$ $Z_b = ?$

Input Impedance

$$Z_i = Z_1 \| Z_b$$

$$Z_b = \frac{V_i}{I_b}$$

$$KVL: V_i = I_b \beta r_e + I_e R_E = I_b \beta r_e + (\beta+1) I_b R_E$$
$$= I_b [\beta r_e + (\beta+1) R_E]$$

$$\Rightarrow Z_b = \beta r_e + (\beta+1) R_E$$

$$\Rightarrow Z_i = Z_1 \| Z_b = R_B \| [\beta r_e + (\beta+1) R_E]$$

Copyright ©2015 Pearson Education, All Rights Reserved

BJT – AC Analysis

- Fixed Bias Circuit without the Emitter Capacitor (cont.)

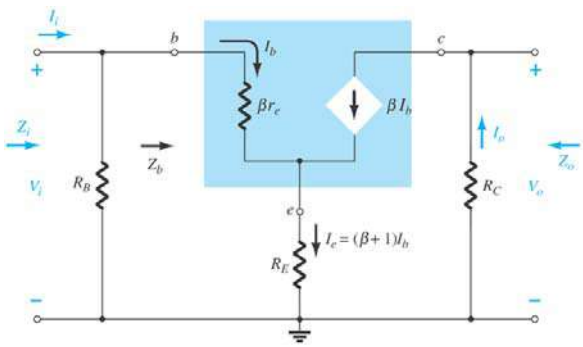

Input Voltage

$$V_i = I_b Z_b = I_b\left[\beta r_e + (\beta+1)R_E\right]$$

Output Voltage

$$V_o = -I_o Z_o = -\beta I_b R_C$$

Copyright ©2015 Pearson Education, All Rights Reserved

BJT – AC Analysis

- Fixed Bias Circuit without the Emitter Capacitor (cont.)

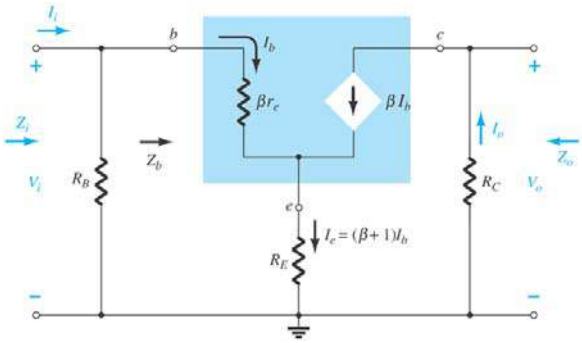

Voltage Gain:

$$\boxed{A_v = \frac{V_o}{V_i} = -\frac{\beta I_b R_C}{I_b\left[\beta r_e + (\beta+1)R_E\right]} = -\frac{\beta R_C}{\beta r_e + (\beta+1)R_E}}$$

Copyright ©2015 Pearson Education, All Rights Reserved

BJT – AC Analysis

- Qn. 3: Find r_e, Z_i, Z_o, and A_v for AC analysis ($r_o = \infty$).

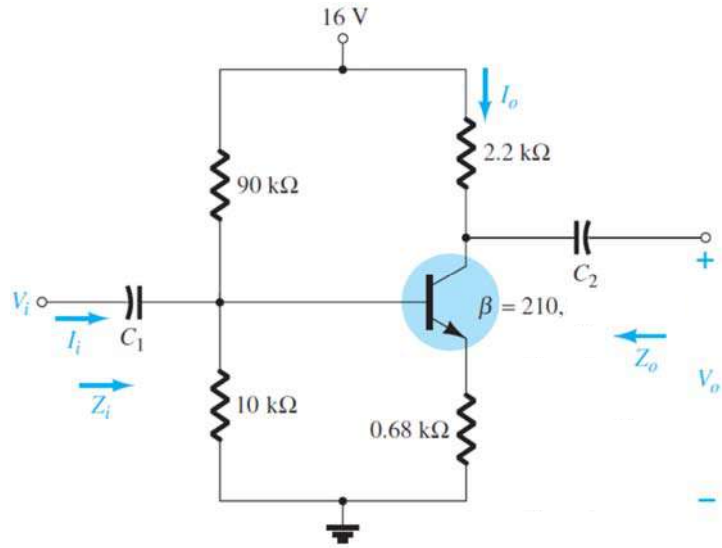

Copyright ©2015 Pearson Education, All Rights Reserved

BJT – AC Analysis

- Qn. 3 (cont.): Find r_e, Z_i, Z_o, and A_v for AC analysis ($r_o = \infty$).

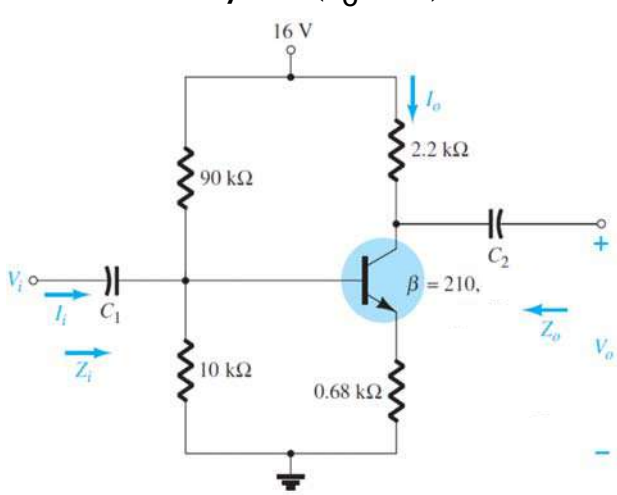

DC Analysis:

$$R_{Th} = R_1 \| R_2 = 9\text{k}\Omega$$

$$V_{Th} = V_{CC}\frac{R_2}{R_1 + R_2} = 1.6\text{V}$$

$$KVL: -1.6 + I_B 9\text{k}\Omega + V_{BE} + (\beta + 1)I_B 0.68\text{k}\Omega = 0$$

$$\Rightarrow I_B = 5.9\mu\text{A}$$

$$\Rightarrow I_E = (\beta + 1)I_B = 1.25\text{mA}$$

AC Analysis:

$$r_e = \frac{26\text{mV}}{I_E} = 20.8\Omega$$

Copyright ©2015 Pearson Education, All Rights Reserved

BJT – AC Analysis

- Qn. 3 (cont.): Find r_e, Z_i, Z_o, and A_v for AC analysis ($r_o = \infty$).

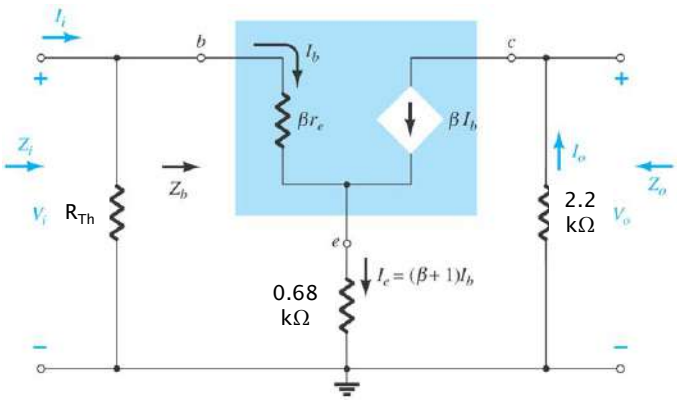

$$r_e = 20.8\Omega$$
$$\beta = 210$$

AC Analysis:

$$Z_i = Z_{Th} \| Z_b = R_{Th} \| [\beta r_e + (\beta + 1)R_E]$$
$$= 9k \| [4.37 + 143.48] = 8.48k\Omega$$

$$Z_o = R_C = 2.2k\Omega$$

$$A_v = \frac{V_o}{V_i} = -\frac{\beta R_C}{\beta r_e + (\beta + 1)R_E}$$

$$\Rightarrow A_v = -\frac{50k}{53k}\frac{3k}{10.71} = -3.18$$

Copyright ©2015 Pearson Education, All Rights Reserved

Course Content

- ~~Circuit Components and Variables, Ohm's Law and Kirchoff's Laws~~
- ~~Circuit Analysis Techniques I - Node Voltage & Mesh Current Methods~~
- ~~Circuit Analysis Techniques II - Thevenin and Norton Equivalent Circuits~~
- ~~First Order RL and RC Circuits~~
- ~~Phasor Concept and AC Analysis of Circuits~~
- Midterm
- ~~Introduction to Semiconductors~~
- ~~Diode Applications~~
- ~~BJT Analysis~~
- FET Analysis
- Operational Amplifier
- Midterm
- Logic Gates
- Make-up Exams

ELE 296 Basic Electric Circuits and Electronics

- FET – Field Effect Transistors
  - JFET (Junction FET)
    - Operation
    - Operation Regions
    - DC Analysis
  - MOSFET (Metal Oxide Semiconductor FET)
    - Operation
    - Operation Regions
    - DC Analysis

Field Effect Transistor

- Field Effect Transistors
  Differences between BJTs:

  BJTs are controlled by current while FETs are controlled by voltage.

  BJTs have lower input impedance and higher gain, however FETs have higher input impedence and lower gain.

  FETs are more temperature stable than BJTs.

  FETs are usually smaller than BJTs.

  Its thermal stability and other general characteristics make it extremely popular in computer integrated circuit (IC) design.

JFET

- JFET Operation – n-channel JFET

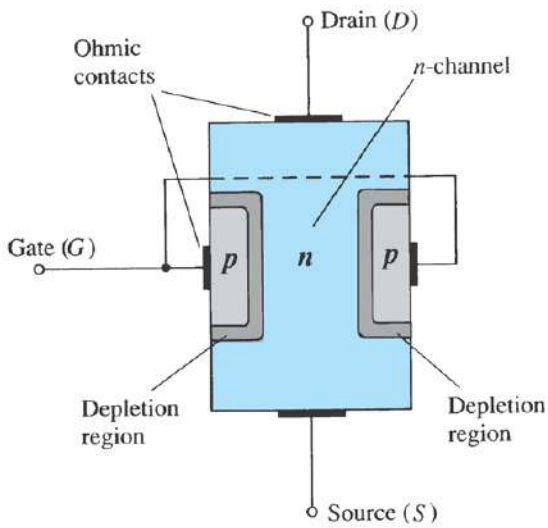

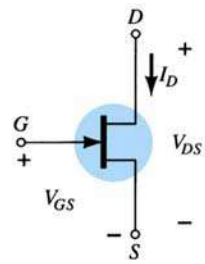

Copyright ©2015 Pearson Education, All Rights Reserved

JFET

- JFET Operation Regions

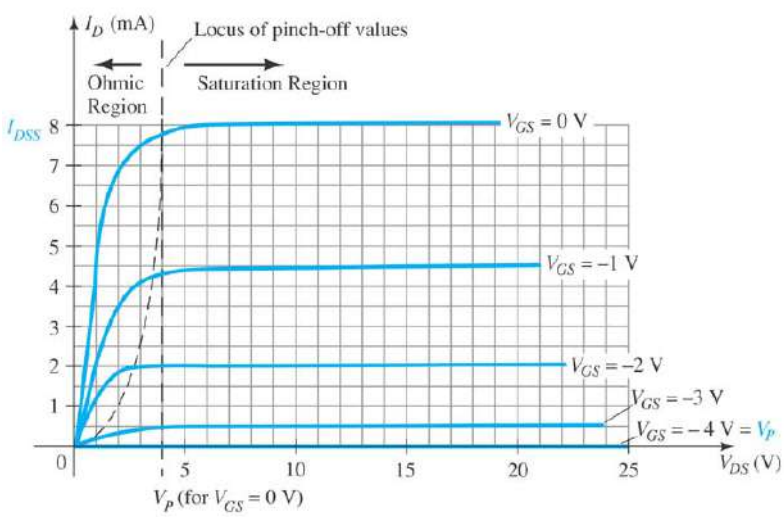

1. $V_{GS}=0V$, $V_{DS}>0V$.
2. $V_{GS}<0V$, $V_{DS}>0V$.
3. Voltage Controlled Resistor Region

Copyright ©2015 Pearson Education, All Rights Reserved

JFET

- JFET Operation Regions – V_{GS}=0V, V_{DS}>0V

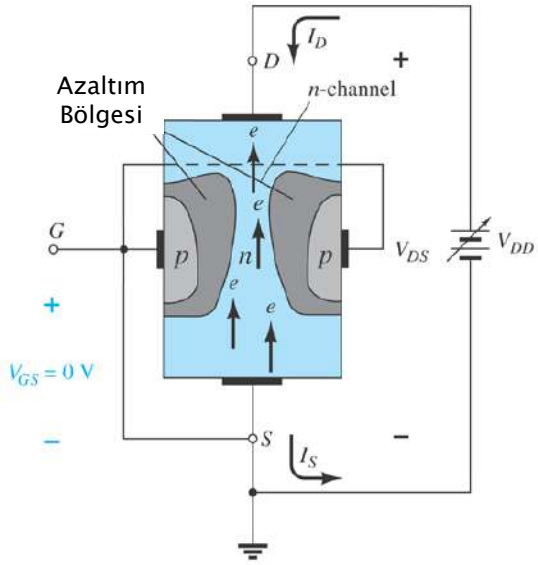

Copyright ©2015 Pearson Education, All Rights Reserved

For all FETs is is accepted that I_G is zero. Therefore using KCL:

$$I_D = I_S$$

Increasing V_{DS} widens the depletion region and the resistance of the semiconductor increases.

However the current also increases since the voltage increase is higher.

JFET

- JFET Operation Regions – V_{GS}=0V, V_{DS}>0V (cont.)

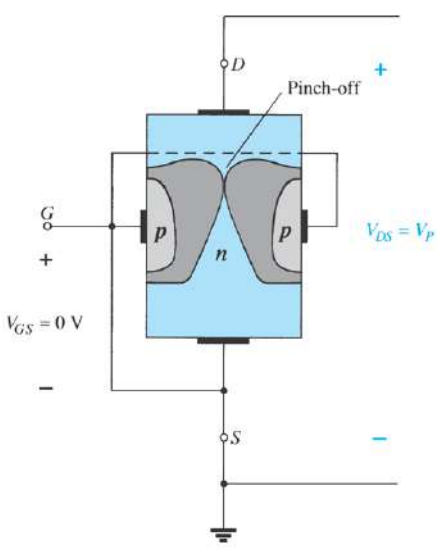

After some point (V_{DS}= V_P) depletion regions touch each other.

When this happens the current I_D becomes constant at I_{DSS}.

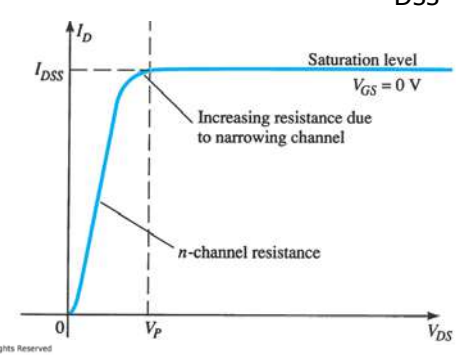

Copyright ©2015 Pearson Education, All Rights Reserved

JFET

- JFET Operation Regions – $V_{GS}<0V$, $V_{DS}>0V$

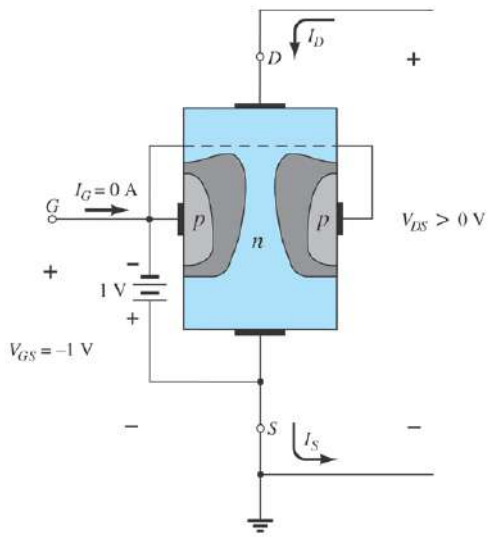

Again as always I_G is zero, therefore:

$$I_D = I_S$$

Until $V_{GS}= -V_P$ we will see a similar characteristic as $V_{GS}=0V$ region.

When $V_{GS}= -V_P$ the current I_D will become zero, and the transistor is called to be 'OFF'.

Copyright ©2015 Pearson Education, All Rights Reserved

JFET

- JFET Operation Regions – $V_{GS}<0V$, $V_{DS}>0V$ (cont.)

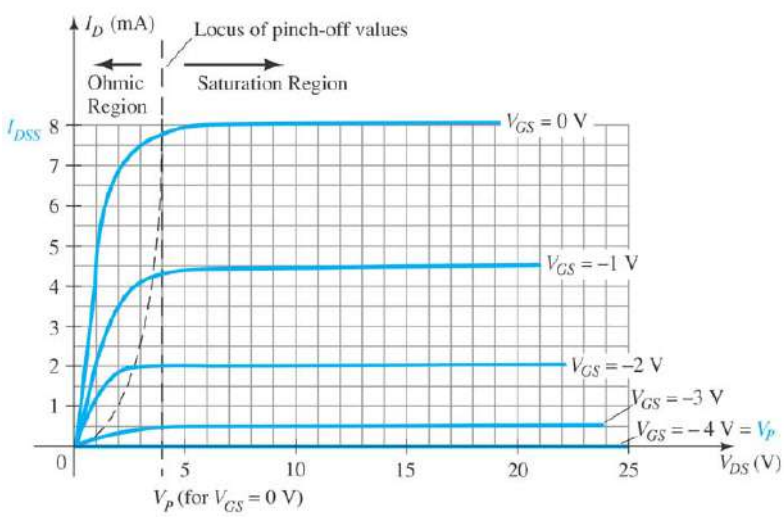

It can be seen that decreasing V_{GS} also decreases the V_{DS} needed for saturation.

Also the saturation value of the current I_D decreases.

When $V_{GS}= -V_P$ the transistor is 'OFF', i.e., $I_D= 0$.

Copyright ©2015 Pearson Education, All Rights Reserved

JFET

- JFET Operation Regions – Voltage Controlled Resistor

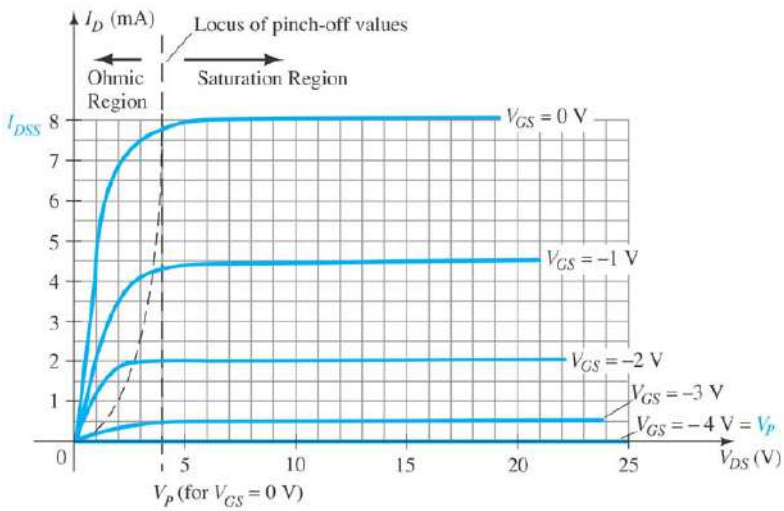

Copyright ©2015 Pearson Education, All Rights Reserved

In the Ohmic Region the JFET acts like a variable resistor.

The resistance is controlled by V_{GS}.

$$r_d = \frac{r_o}{\left(1 - \frac{V_{GS}}{V_P}\right)^2}$$

JFET

- JFET Transfer Characteristics

BJT is controlled by current as shown below:

$$I_C = \beta I_B$$

However, JFET is controlled by voltage. Input output relation is given by the Shockley's equation as:

$$\boxed{I_D = I_{DSS}\left(1 - \frac{V_{GS}}{V_P}\right)^2}$$

For the DC analysis, a graphical rather approach will in general be more direct and easier to apply. The intersection of Shockley's equation and network equation will give the operating point.

JFET

- JFET Transfer Curve

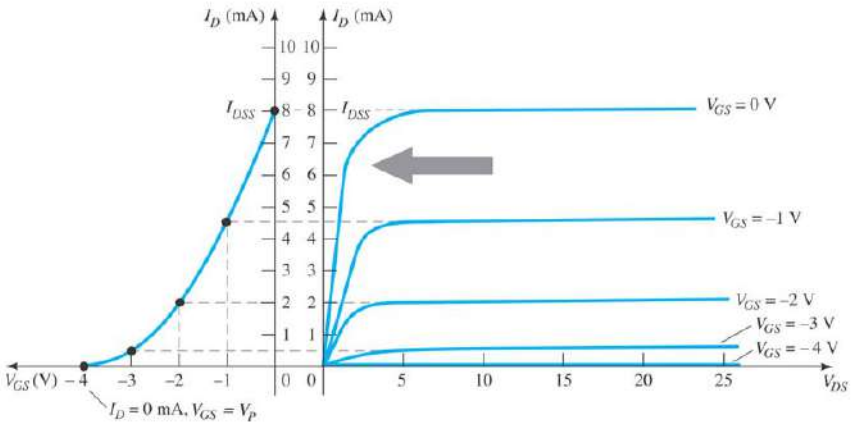

$$I_D = I_{DSS}\left(1 - \frac{V_{GS}}{V_P}\right)^2$$

Using Shockley's equation the characteristic on the left is drawn.

Copyright ©2015 Pearson Education, All Rights Reserved

JFET

- JFET Transfer Eğrisi

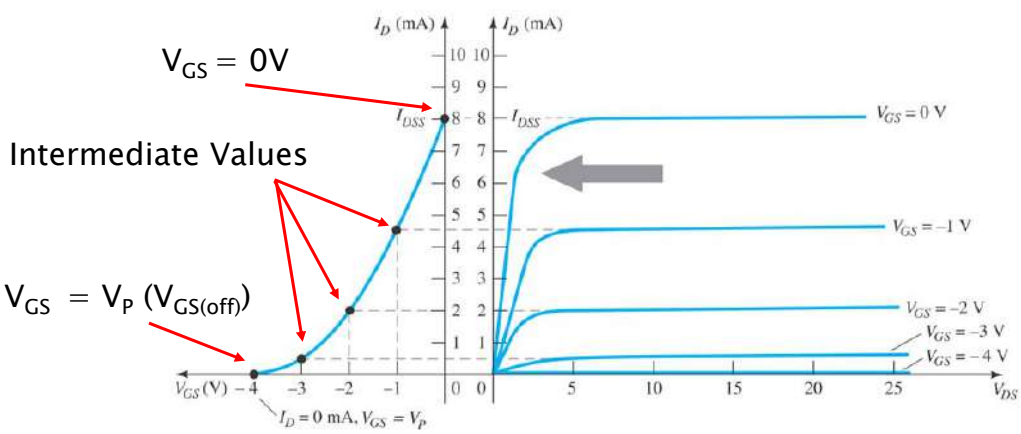

$$I_D = I_{DSS}\left(1 - \frac{V_{GS}}{V_P}\right)^2$$

Using Shockley's equation the characteristic on the left is drawn.

Copyright ©2015 Pearson Education, All Rights Reserved

JFET

- Qn. 1: Draw the transfer curve for I_{DSS}=12mA and V_P=-6V.

$$I_D = I_{DSS}\left(1-\frac{V_{GS}}{V_P}\right)^2 \Rightarrow V_{GS} = V_P\left(1-\sqrt{\frac{I_D}{I_{DSS}}}\right)$$

$$I_D = \frac{I_{DSS}}{2} \Rightarrow V_{GS} = V_P\left(1-\sqrt{\frac{I_{DSS}/2}{I_{DSS}}}\right) \cong 0.3V_P$$

$$I_D = I_{DSS}\left(1-\frac{V_{GS}}{V_P}\right)^2$$

$$V_{GS} = \frac{V_P}{2} \Rightarrow I_D = I_{DSS}\left(1-\frac{V_P/2}{V_P}\right)^2 = \frac{I_{DSS}}{4}$$

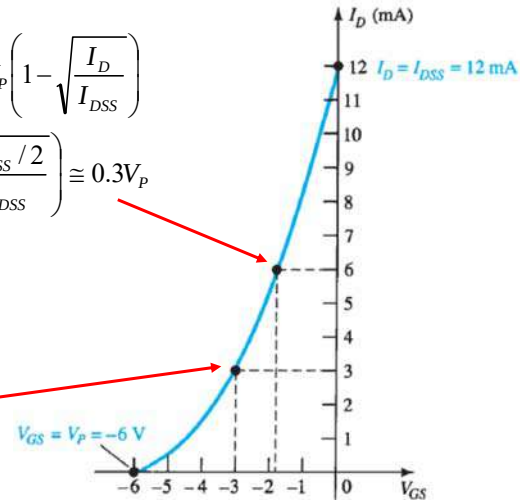

Copyright ©2015 Pearson Education, All Rights Reserved

MOSFET

- MOSFET Operation
  Depletion Type (D-Type) – n-channel

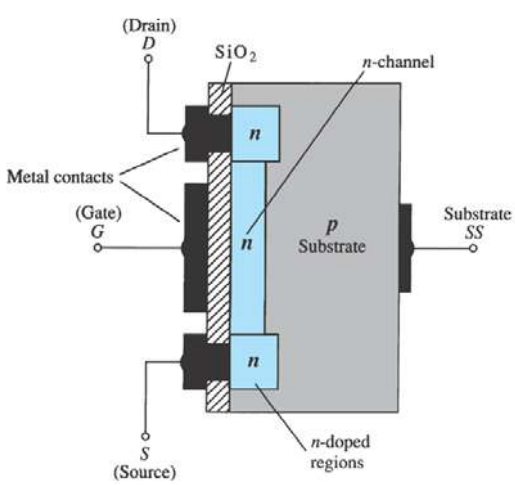

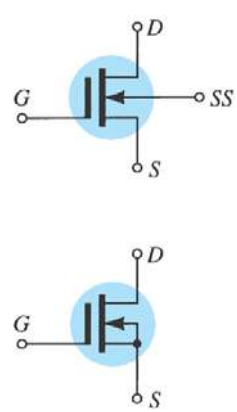

$$\boxed{I_G = 0 \Rightarrow I_D = I_S}$$

Copyright ©2015 Pearson Education, All Rights Reserved

MOSFET

- MOSFET Operation Regions
  Depletion Type (D-Type) – n-channel

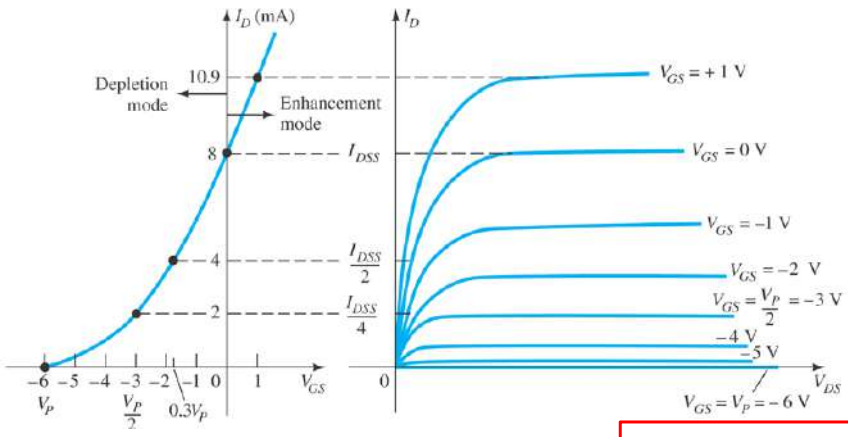

Input output relation is same as JFET, however, now V_{GS} can take positive values.

$$I_D = I_{DSS}\left(1 - \frac{V_{GS}}{V_P}\right)^2$$

Copyright ©2015 Pearson Education, All Rights Reserved

MOSFET

- MOSFET Operation Regions
  Depletion Type (D-Type) – n-channel (cont.)

$V_{GS} = 0V \Rightarrow I_D = I_{DSS}$

$V_{GS} < 0V \Rightarrow I_D < I_{DSS}$

$V_{GS} > 0V \Rightarrow I_D > I_{DSS}$

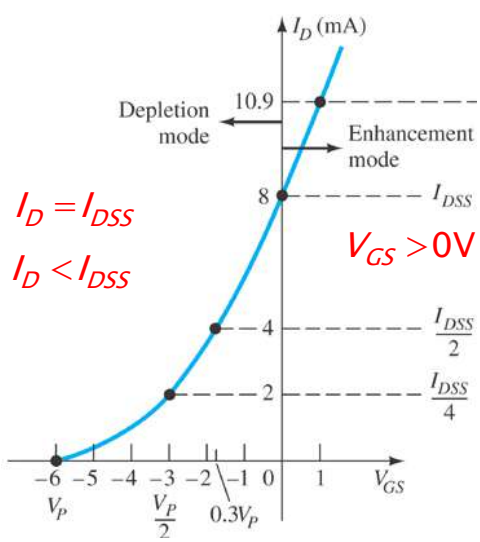

Now that V_{GS} can take positive values the current on the transistor can be increased beyond I_{DSS}.

Copyright ©2015 Pearson Education, All Rights Reserved

MOSFET

- MOSFET Operation
  Enhancement Type (E-Type) – n-channel

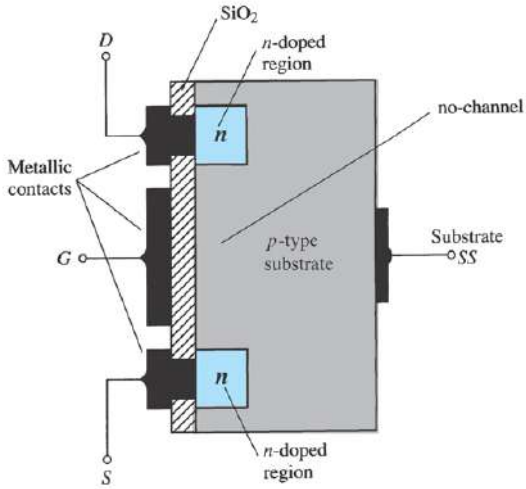

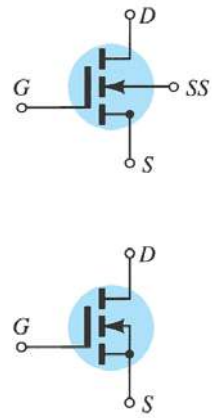

$$I_G = 0 \Rightarrow I_D = I_S$$

Copyright ©2015 Pearson Education, All Rights Reserved

MOSFET

- MOSFET Operation Regions
  Enhancement Type (E-Type) – n-channel

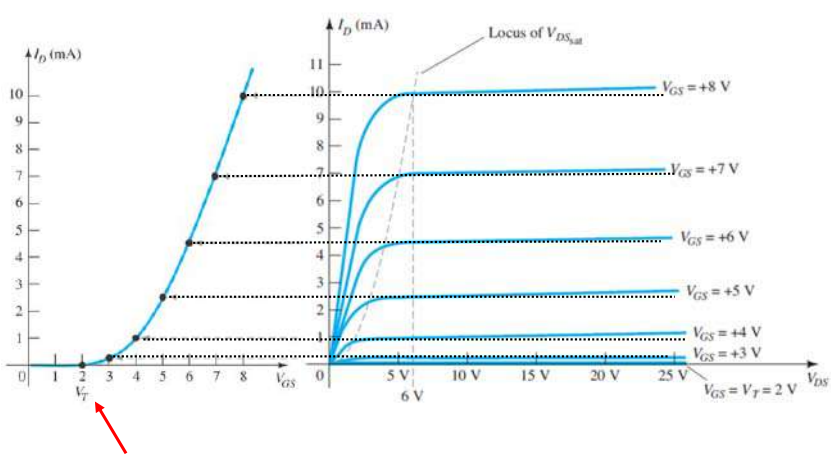

Threshold value for V_{GS}.

V_{GS} is always positive.

Increasing V_{GS} also increases the current I_D.

Increasing V_{DS} for constant V_{GS} increases I_D until saturation.

Copyright ©2015 Pearson Education, All Rights Reserved

MOSFET

- MOSFET Operation Regions
  Enhancement Type (E-Type) – n-channel (cont.)

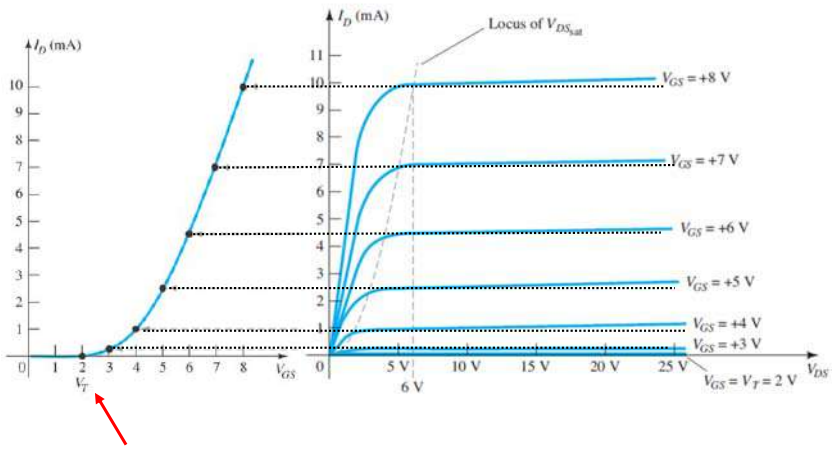

Threshold value for V_{GS}.

Instead of Shockley's equation we now have a new equation for E-type MOSFETs:

$$V_{DS,sat} = V_{GS} - V_T$$

$$I_D = k(V_{GS} - V_T)^2$$

$$k = \frac{I_{D(ON)}}{(V_{GS(ON)} - V_T)^2}$$

Copyright ©2015 Pearson Education, All Rights Reserved

FET – DC Analysis

- FET DC Biasing

  Since FETs are nonlinear a mathematical approach can be complicated sometimes and a graphical approach can be quicker.

  In the DC analysis of all FETs:

$$I_G \cong 0 \Rightarrow I_D = I_S$$

  For JFETs ve D-type MOSFETs:

$$I_D = I_{DSS}\left(1 - \frac{V_{GS}}{V_P}\right)^2$$

  For E-type MOSFETs:

$$I_D = k(V_{GS} - V_T)^2$$

JFET – DC Analysis

- Steps for the DC Analysis of JFETs

1. Draw the DC equivalent circuit.
   Capacitors are open, inductors are short circuit.
   AC voltage sources are short circuit,
   AC current sources are open circuit.
2. Write KVL for the G–S junction.
   Find V_{GS}.
   Find I_D using graphical or mathematical approach.
3. Write KVL for the D–S junction.
   Find V_{DS}.

JFET – DC Analysis

- Fixed Bias Circuit

1. Draw the DC equivalent circuit.

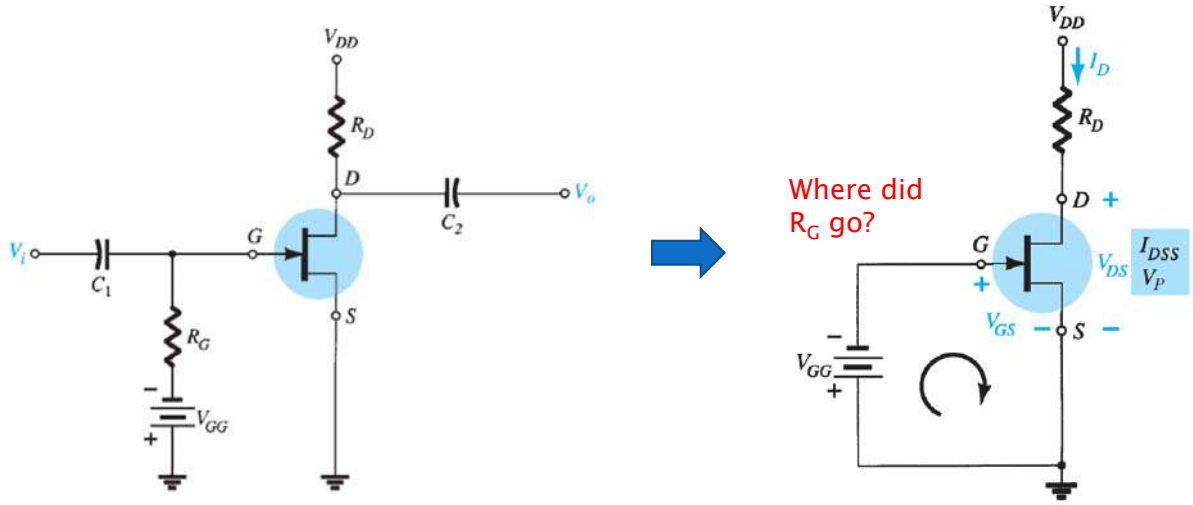

Copyright ©2015 Pearson Education, All Rights Reserved

JFET – DC Analysis

- Fixed Bias Circuit (cont.)

2. Write KVL for G–S junction.
3. Write KVL for D–S junction.

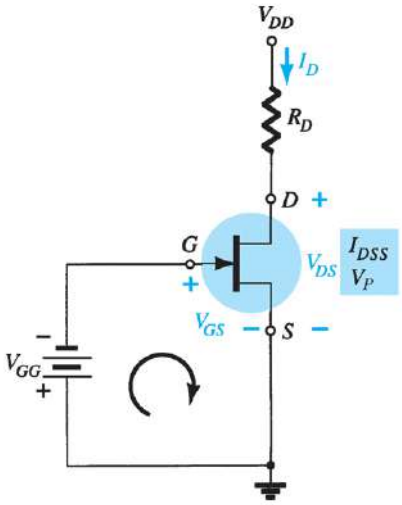

$$KVL: V_{GS} = -V_{GG}$$

$$I_D = I_{DSS}\left(1 - \frac{V_{GS}}{V_P}\right)^2$$

$$KVL: V_{DS} = V_{DD} - I_D R_D$$

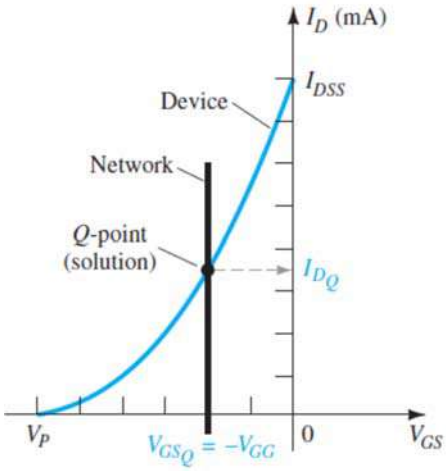

Copyright ©2015 Pearson Education, All Rights Reserved

JFET – DC Analysis

- Self-Bias Circuit

1. Draw the DC equivalent circuit.

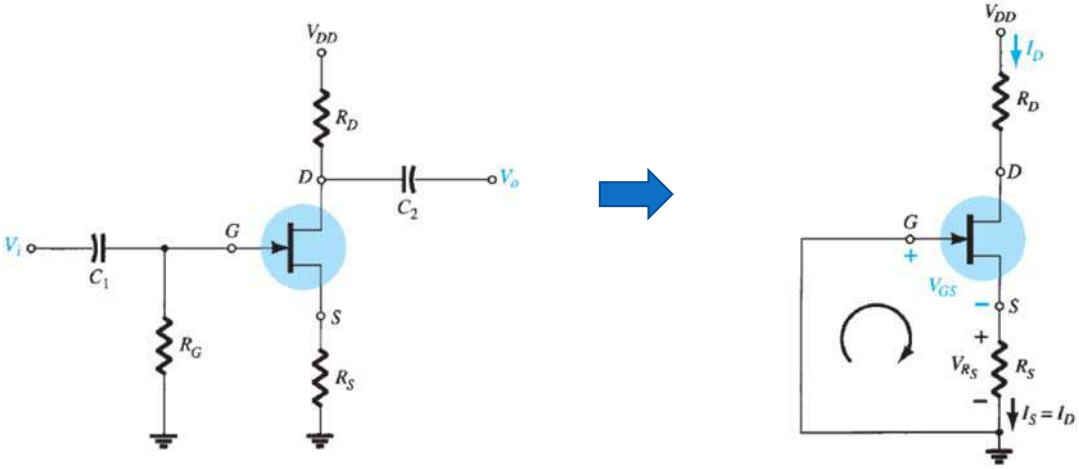

Copyright ©2015 Pearson Education, All Rights Reserved

JFET – DC Analysis

- Self-Bias Circuit (cont.)

2. Write KVL for G-S junction. Find I_D with mathematical approach.

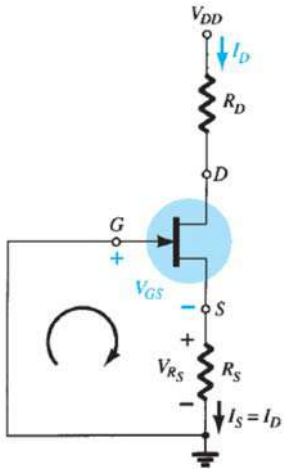

Copyright ©2015 Pearson Education, All Rights Reserved

$$KVL: V_{GS} + I_D R_S = 0 \;\Rightarrow\; V_{GS} = -I_D R_S$$

$$I_D = I_{DSS}\left(1 - \frac{V_{GS}}{V_P}\right)^2 = I_{DSS}\left(1 + \frac{I_D R_S}{V_P}\right)^2$$

$$\Rightarrow I_D^2 + K_1 I_D + K_2 = 0$$

I_D can be found using a second order polynomial equation.

JFET – DC Analysis

- Self-Bias Circuit (cont.)

2. Write KVL for G-S junction. Find I_D with graphical approach.

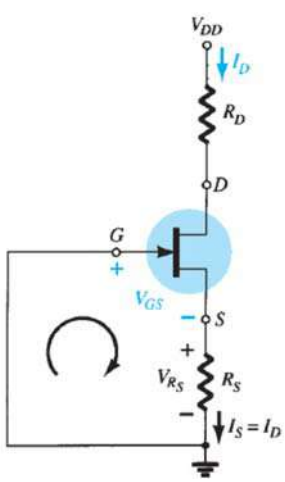

Copyright ©2015 Pearson Education, All Rights Reserved

$$KVL: V_{GS} + I_D R_S = 0 \;\Rightarrow\; V_{GS} = -I_D R_S$$

The operating point is the intersection of two equations.

$$I_D = I_{DSS}\left(1 - \frac{V_{GS}}{V_P}\right)^2$$

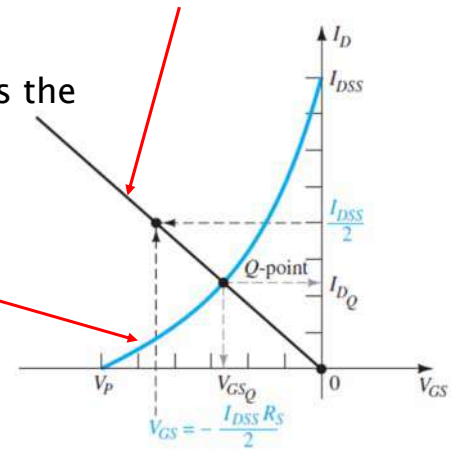

JFET – DC Analysis

- Self-Bias Circuit (cont.)

3. Write KVL for D-S junction.

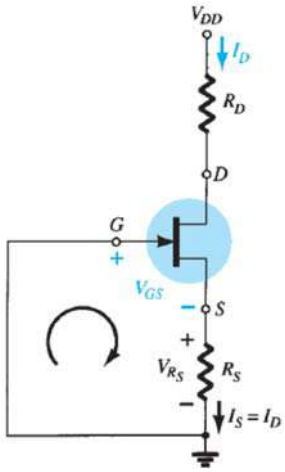

$$KVL: V_{DD} = I_D R_D + V_{DS} + I_D R_S$$
$$\Rightarrow V_{DS} = V_{DD} - I_D(R_D + R_S)$$

Copyright ©2015 Pearson Education, All Rights Reserved

JFET – DC Analysis

- Qn. 2: Find V_{GS}, I_D, and V_{DS}.

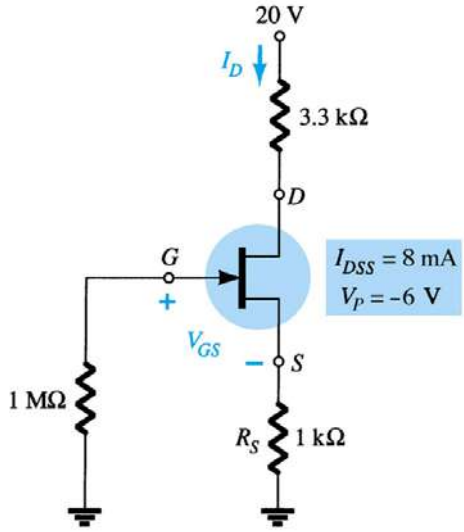

Copyright ©2015 Pearson Education, All Rights Reserved

JFET – DC Analysis

- Qn. 2 (cont.): Find V_{GS}, I_D, and V_{DS}.

$$KVL: V_{GS} + I_D 1000 = 0 \;\Rightarrow\; V_{GS} = -1000 I_D$$

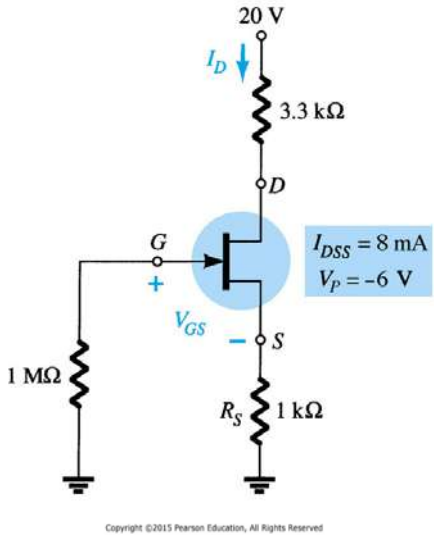

Copyright ©2015 Pearson Education, All Rights Reserved

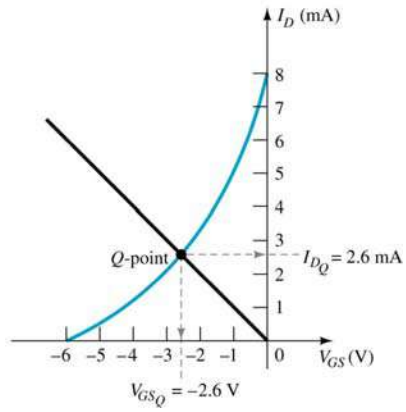

$$KVL: 20 = I_D 3.3k + V_{DS} + I_D 1k$$

$$I_D = 2.6\text{mA} \Rightarrow V_{DS} = 8.82\text{V}$$

JFET – DC Analysis

- Qn. 2 (cont.): Find V_{GS}, I_D, and V_{DS}.

$$KVL: V_{GS} + I_D 1000 = 0 \;\Rightarrow\; V_{GS} = -1000 I_D$$

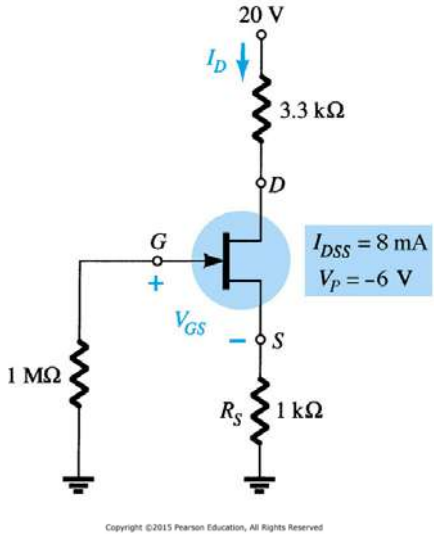

Copyright ©2015 Pearson Education, All Rights Reserved

$$I_D = I_{DSS}\left(1 - \frac{V_{GS}}{V_P}\right)^2 = I_{DSS}\left(1 + \frac{I_D R_S}{V_P}\right)^2$$

$$\Rightarrow I_D^2 + I_D\left(\frac{2V_P}{R_S} - \frac{V_P^2}{I_{DSS} R_S^2}\right) + \frac{V_P^2}{R_S^2} = 0$$

$$\Rightarrow I_D^2 + I_D\left(\frac{-12}{1000} - \frac{36}{0.008 \times 1000000}\right) + \frac{36}{1000000} = 0$$

$$\Rightarrow I_D \cong 2.6\text{mA}$$

$$KVL: 20 = I_D 3.3k + V_{DS} + I_D 1k$$

$$I_D = 2.6\text{mA} \Rightarrow V_{DS} = 8.82\text{V}$$

JFET – DC Analysis

- Voltage Divider Circuit

1. Draw the DC equivalent circuit.

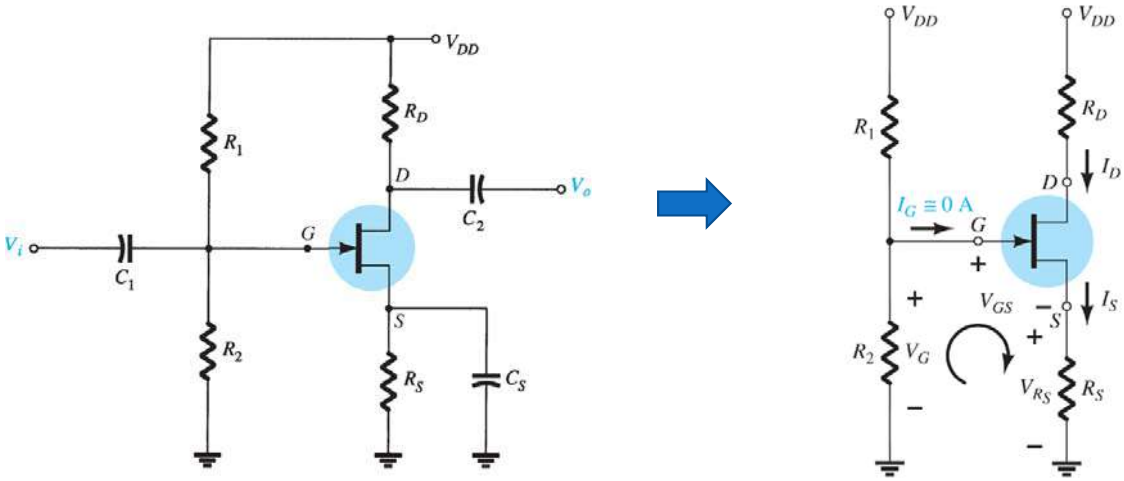

Copyright ©2015 Pearson Education, All Rights Reserved

JFET – DC Analysis

- Voltage Divider Circuit (cont.)

2. Write KVL for G-S junction. Find I_D with mathematical approach.

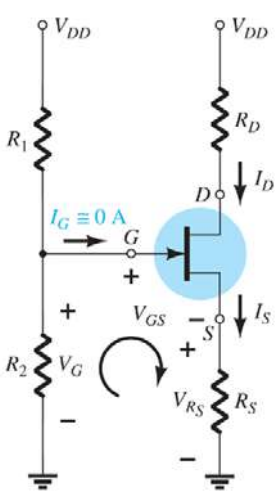

Copyright ©2015 Pearson Education, All Rights Reserved

$$I_G = 0 \;\Rightarrow\; V_G = \frac{R_2}{R_1 + R_2} V_{DD}$$

$$V_{GS} = V_G - V_S = \frac{R_2}{R_1 + R_2} V_{DD} - I_D R_S$$

$$\Rightarrow I_D = \frac{1}{R_S}\left(\frac{R_2}{R_1 + R_2} V_{DD} - V_{GS}\right)$$

$$I_D = I_{DSS}\left(1 - \frac{V_{GS}}{V_P}\right)^2$$

JFET – DC Analysis

- Voltage Divider Circuit (cont.)

2. Write KVL for G–S junction. Find I_D with graphical approach.

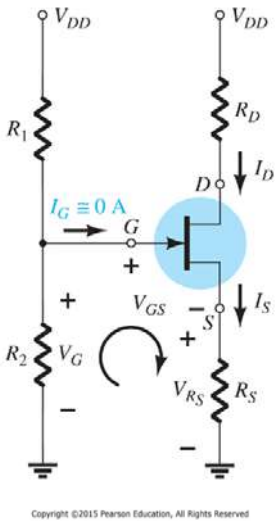

$$I_D = \frac{1}{R_S}\left(\frac{R_2}{R_1+R_2}V_{DD} - V_{GS}\right)$$

$$I_D = I_{DSS}\left(1-\frac{V_{GS}}{V_P}\right)^2$$

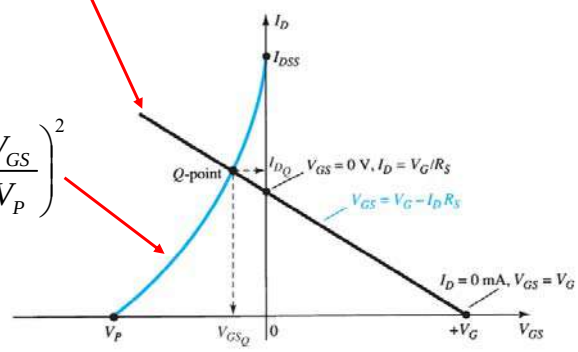

JFET – DC Analysis

- Voltage Divider Circuit (cont.)

3. Write KVL for D–S junction.

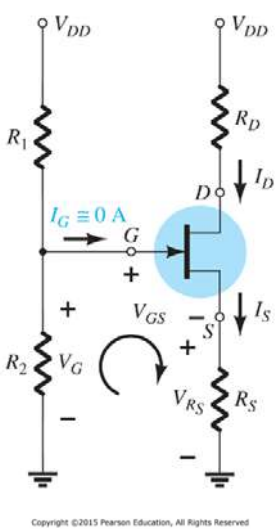

$$KVL: V_{DD} = I_D R_D + V_{DS} + I_D R_S$$
$$\Rightarrow V_{DS} = V_{DD} - I_D\left(R_D + R_S\right)$$

JFET – DC Analysis

- Qn. 3: Find V_{GS}, I_D, and V_{DS}.

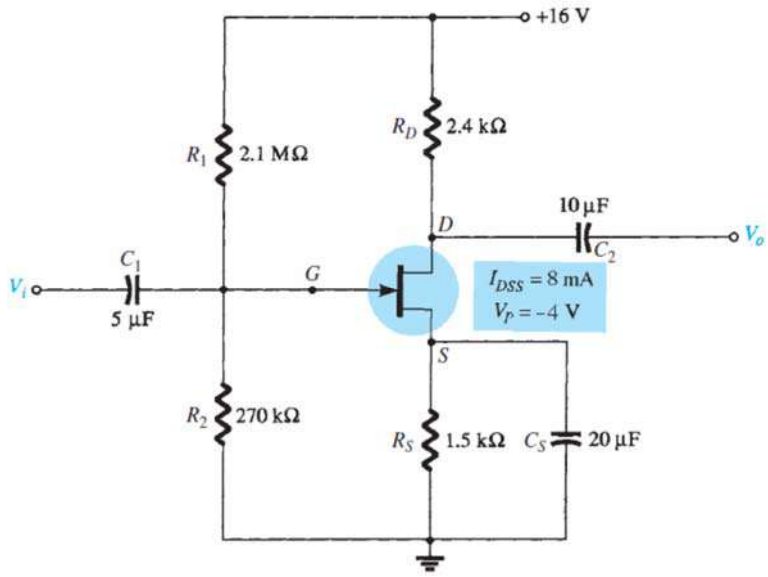

Copyright ©2015 Pearson Education, All Rights Reserved

JFET – DC Analysis

- Qn. 3 (cont.): Find V_{GS}, I_D, and V_{DS}.

$$I_D = \frac{1}{R_S}\left(\frac{R_2}{R_1+R_2}V_{DD} - V_{GS}\right) = \frac{1}{1.5\text{k}}\left(1.82 - V_{GS}\right)$$

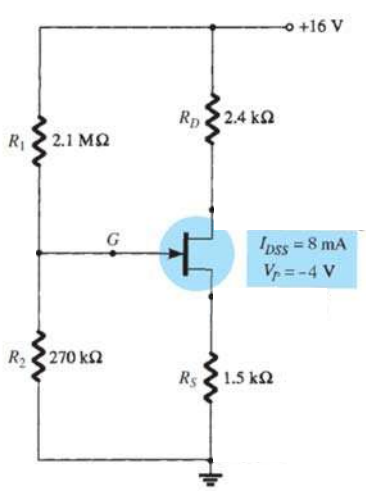

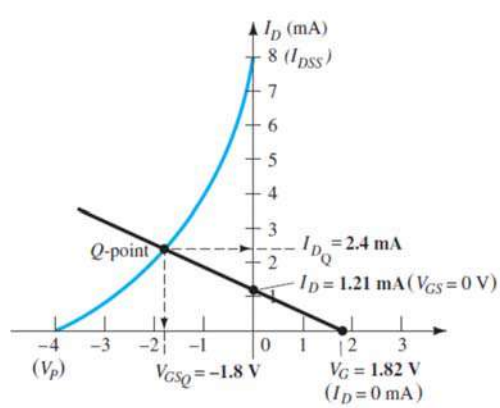

$$KVL: 16 = I_D 2.4k + V_{DS} + I_D 1.5k \Rightarrow V_{DS} = 6.64\text{V}$$

Copyright ©2015 Pearson Education, All Rights Reserved

JFET – DC Analysis

- Qn. 3 (cont.): Find V_{GS}, I_D, and V_{DS}.

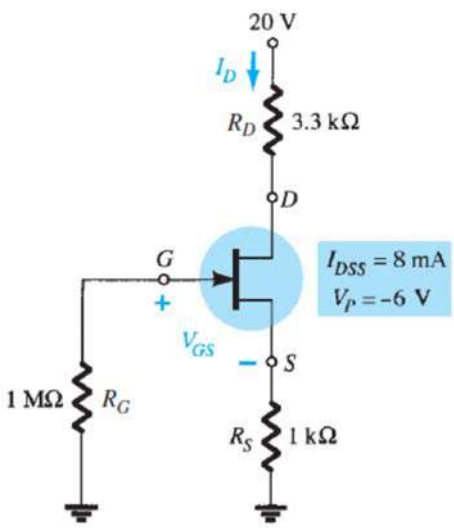

Copyright ©2015 Pearson Education, All Rights Reserved

$$I_D = \frac{1}{1.5\text{k}}\left(1.82 - V_{GS}\right) \Rightarrow V_{GS} = 1.82 - 1500 I_D$$

$$I_D = I_{DSS}\left(1 - \frac{V_{GS}}{V_P}\right)^2 = I_{DSS}\left(1 + \frac{1.82 - 1500 I_D}{V_P}\right)^2$$

$$I_D^2 \frac{I_{DSS}\, 2250\text{k}}{V_P^2} + I_D\left(\frac{-5460 I_{DSS}}{V_P^2} - \frac{-3000 I_{DSS}}{V_P} - 1\right) + I_{DSS} + \frac{3.64 I_{DSS}}{V_P} + \frac{3.31 I_{DSS}}{V_P^2} = 0$$

$$\Rightarrow I_D \cong 2.4\text{mA}$$

$$KVL: 16 = I_D 2.4k + V_{DS} + I_D 1.5k \Rightarrow V_{DS} = 6.64\text{V}$$

D-MOSFET – DC Analysis

- Steps for the DC Analysis of D-type MOSFETs

1. Draw the DC equivalent circuit.
   Capacitors are open, inductors are short circuit.
   AC voltage sources are short circuit,
   AC current sources are open circuit.
2. Write KVL for the G-S junction.
   Find V_{GS}.
   Find I_D using graphical or mathematical approach.
3. Write KVL for the D-S junction.
   Find V_{DS}.

It is almost identical to the analysis of JFETs. The only difference is that V_{GS} can take positive values and I_D can be higher than I_{DSS}.

D-MOSFET – DC Analysis

- Qn. 4: Find V_{GS}, I_D, and V_{DS}.

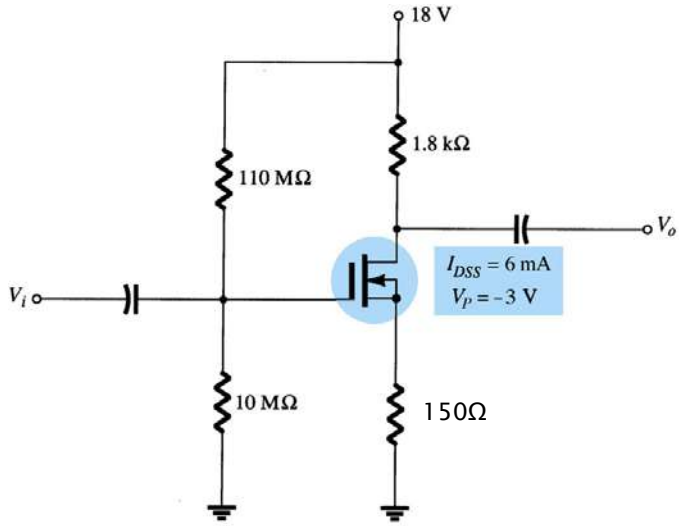

Copyright ©2015 Pearson Education, All Rights Reserved

D-MOSFET – DC Analysis

- Qn. 4 (cont.): Find V_{GS}, I_D, and V_{DS}.

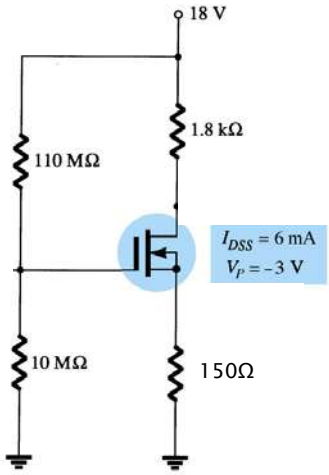

$$I_G = 0 \;\Rightarrow\; V_G = \frac{10\text{M}}{120\text{M}}18 = 1.5\text{V}$$

$$V_{GS} = V_G - V_S = 1.5 - I_D 150$$

$$\Rightarrow I_D = \frac{1}{150}\left(1.5 - V_{GS}\right)$$

Copyright ©2015 Pearson Education, All Rights Reserved

D-MOSFET – DC Analysis

- Qn. 4 (cont.): Find V_{GS}, I_D, and V_{DS}.

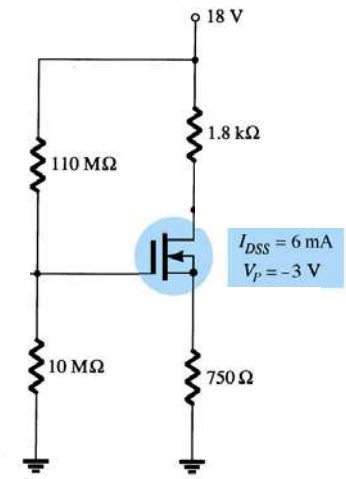

$$I_D = \frac{1}{150}\left(1.5 - V_{GS}\right)$$

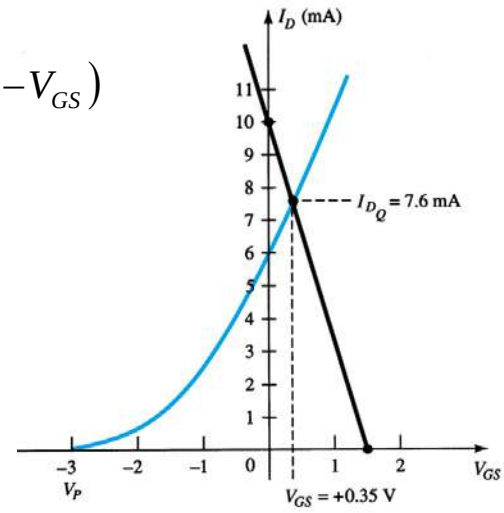

$$KVL: 18 = I_D 1.8k + V_{DS} + I_D 0.15k \Rightarrow V_{DS} = 3.18\text{V}$$

Copyright ©2015 Pearson Education, All Rights Reserved

D-MOSFET – DC Analysis

- Qn. 5: Find V_{GS}, I_D, and V_{DS}.

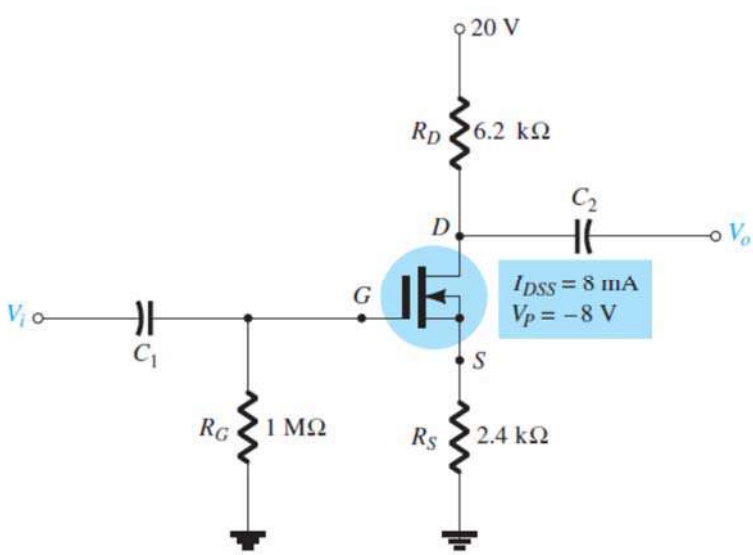

Copyright ©2015 Pearson Education, All Rights Reserved

D-MOSFET – DC Analysis

- Qn. 5 (cont.): Find V_{GS}, I_D, and V_{DS}.

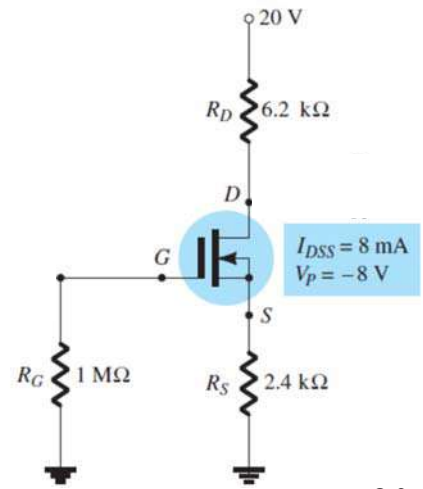

Copyright ©2015 Pearson Education, All Rights Reserved

$$V_{GS} = V_G - V_S = -I_D 2.4\text{k}$$

$$\Rightarrow I_D = \frac{-V_{GS}}{2.4\text{k}}$$

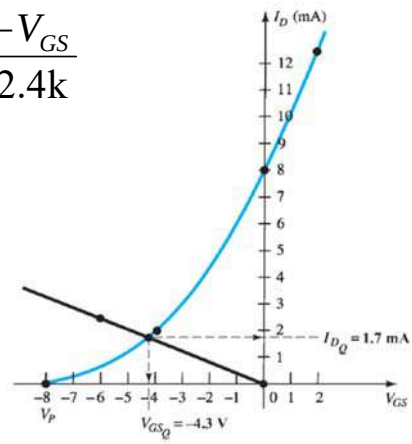

$$20 = I_D 6.2k + V_{DS} + I_D 2.4k \Rightarrow V_{DS} = 5.38\text{V}$$

E-MOSFET – DC Analysis

- Steps for the DC Analysis of E-type MOSFETs

1. Draw the DC equivalent circuit.
   Capacitors are open, inductors are short circuit.
   AC voltage sources are short circuit,
   AC current sources are open circuit.
2. Find the constant k using the given information (V_T, $I_{D(ON)}$, $V_{GS(ON)}$) and draw the transfer characteristic.
3. Write KVL for the G-S junction.
   Find V_{GS}.
   Find I_D using graphical or mathematical approach.
4. Write KVL for the D-S junction.
   Find V_{DS}.

E-MOSFET – DC Analysis

- Feedback Bias Circuit

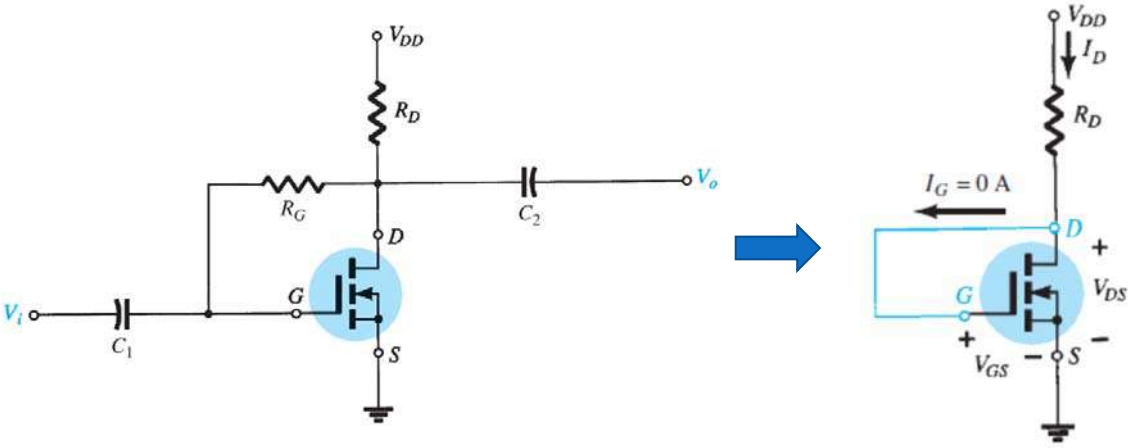

Copyright ©2015 Pearson Education, All Rights Reserved

E-MOSFET – DC Analysis

- Feedback Bias Circuit (cont.)

$$I_G = 0 \;\Rightarrow\; V_G = V_D \;\Rightarrow\; V_{GS} = V_{DS}$$

$$V_{DD} = I_D R_D + V_{DS}$$

$$\Rightarrow V_{DS} = V_{GS} = V_{DD} - I_D R_D$$

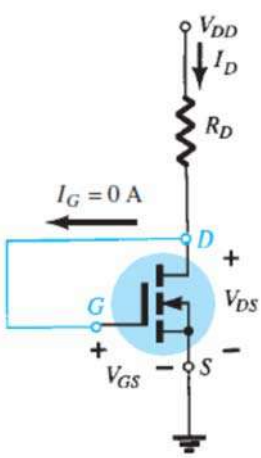

$$V_{DS,sat} = V_{GS} - V_{GS(Th)}$$

$$I_D = k\left(V_{GS} - V_{GS(Th)}\right)^2$$

$$k = \frac{I_{D(ON)}}{\left(V_{GS(ON)} - V_{GS(Th)}\right)^2}$$

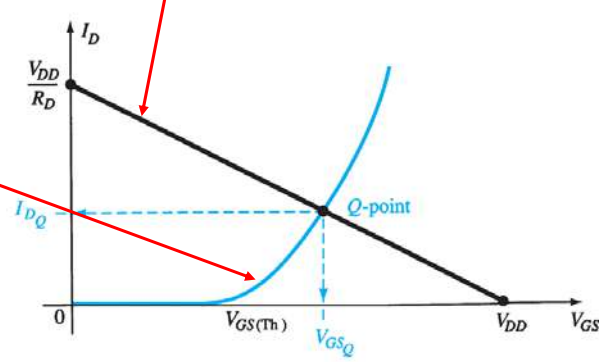

Copyright ©2015 Pearson Education, All Rights Reserved

E-MOSFET – DC Analysis

- Qn. 6: Find V_{GS}, I_D, and V_{DS}.

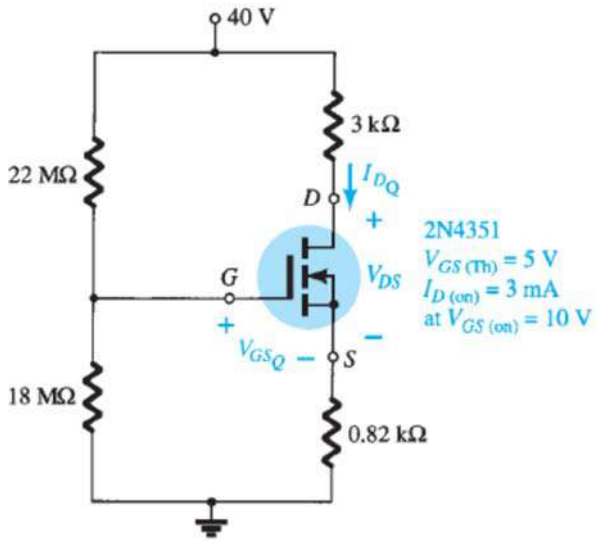

Copyright ©2015 Pearson Education, All Rights Reserved

E-MOSFET – DC Analysis

- Qn. 6 (cont.): Find V_{GS}, I_D, and V_{DS}.

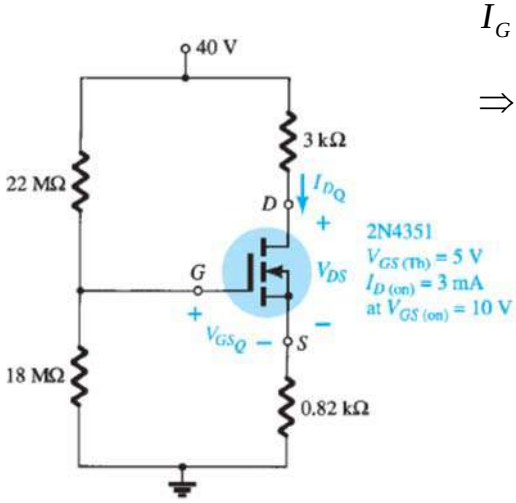

Copyright ©2015 Pearson Education, All Rights Reserved

$$I_G = 0 \;\Rightarrow\; V_G = \frac{R_2}{R_1 + R_2} V_{DD} = 15\text{V}$$

$$\Rightarrow V_{GS} = V_G - V_S = 15\text{V} - I_D 820$$

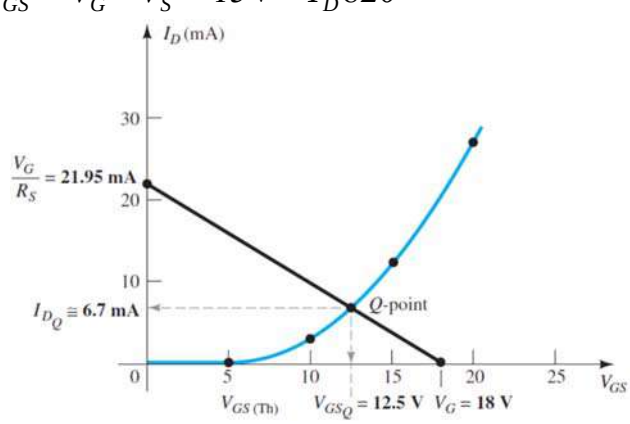

$$\Rightarrow V_{DS} = 40 - I_D 3.82 \cong 14.41\text{V}$$

E-MOSFET – DC Analysis

- Qn. 6 (cont.): Find V_{GS}, I_D, and V_{DS}.

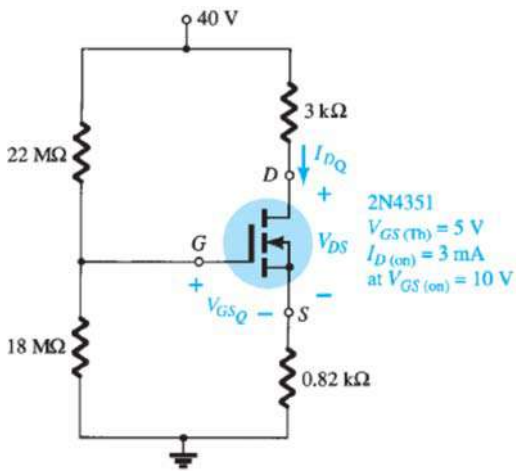

$$I_G = 0 \;\Rightarrow\; V_G = \frac{R_2}{R_1 + R_2} V_{DD} = 18\text{V}$$

$$\Rightarrow V_{GS} = V_G - V_S = 18\text{V} - I_D 820$$

$$k = \frac{I_{D(ON)}}{\left(V_{GS(ON)} - V_{GS(Th)}\right)^2} = \frac{3\text{mA}}{10\text{V} - 5\text{V}} = 0.12 \times 10^{-3}$$

$$I_D = k\left(V_{GS} - V_{GS(Th)}\right)^2 = 0.12 \times 10^{-3}\left(13 - I_D 820\right)^2$$

$$\Rightarrow I_D \cong 6.7\text{mA}$$

$$\Rightarrow V_{DS} = 40 - I_D 3.82 \cong 14.41\text{V}$$

Copyright ©2015 Pearson Education, All Rights Reserved

E-MOSFET – DC Analysis

- Qn. 7: For the given E-type MOSFET, if $V_{DSQ} = 0.5V_{DD}$ and $I_{DQ} = I_{D(ON)}$ find V_{DD} and R_D?

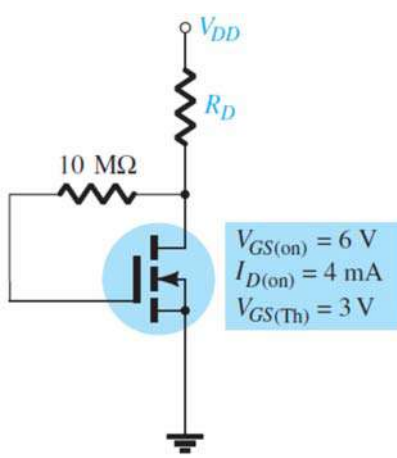

Copyright ©2015 Pearson Education, All Rights Reserved

E-MOSFET – DC Analysis

- Qn. 7 (cont.): For the given E-type MOSFET, if $V_{DSQ} = 0.5V_{DD}$ and $I_{DQ} = I_{D(ON)}$ find V_{DD} and R_D?

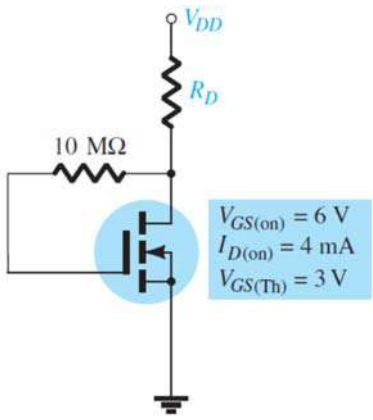

$$I_{DQ} = I_{D(ON)} \Rightarrow V_{GSQ} = V_{GS(ON)} = 6\text{V}$$
$$I_G = 0 \Rightarrow V_G = V_D \Rightarrow V_{GS} = V_{DS}$$
$$\Rightarrow V_{DD} = 2V_{DS} = 12\text{V}$$

$$KVL: V_{DD} = I_D R_D + V_{DS}$$
$$\Rightarrow R_D = \frac{12-6}{4\text{mA}} = 1.5\text{k}\Omega$$

Copyright ©2015 Pearson Education, All Rights Reserved

Course Content

- ~~Circuit Components and Variables, Ohm's Law and Kirchoff's Laws~~
- ~~Circuit Analysis Techniques I - Node Voltage & Mesh Current Methods~~
- ~~Circuit Analysis Techniques II - Thevenin and Norton Equivalent Circuits~~
- ~~First Order RL and RC Circuits~~
- ~~Phasor Concept and AC Analysis of Circuits~~
- Midterm
- ~~Introduction to Semiconductors~~
- ~~Diode Applications~~
- ~~BJT Analysis~~
- ~~FET Analysis~~
- Operational Amplifier
- Midterm
- Logic Gates
- Make-up Exams

ELE 296 Basic Electric Circuits and Electronics

- Operational Amplifier
  - Inverting Amplifier
  - Non-Inverting Amplifier
  - Summing Amplifier
  - Difference Amplifier
  - Integrating Amplifier
  - Differentiating Amplifier

Operational Amplifier

- Operational Amplifier Voltages and Currents:

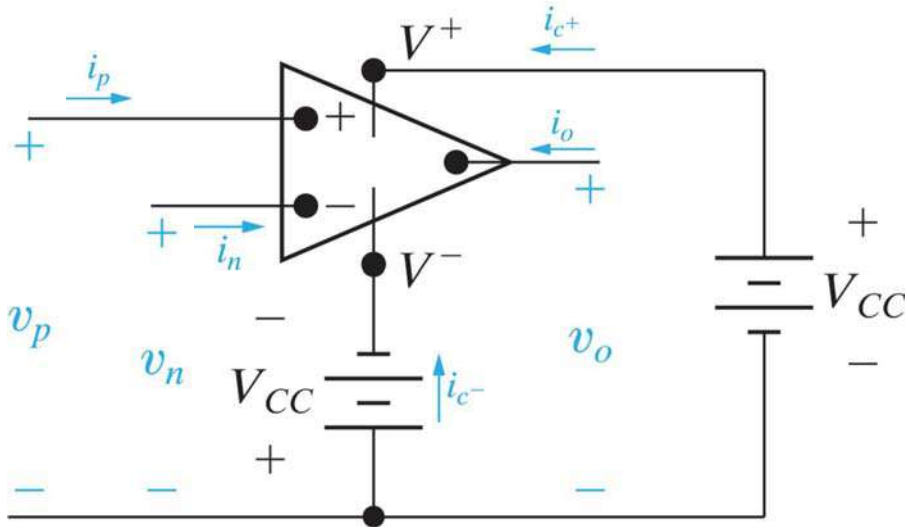

Copyright ©2015 Pearson Education, All Rights Reserved

Operational Amplifier

- Operational Amplifier Characteristics:

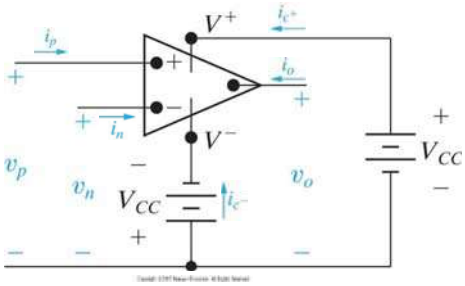

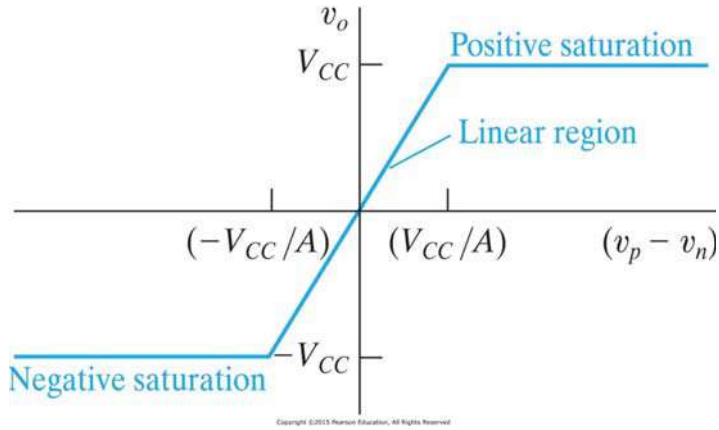

$$v_o = \begin{cases} -V_{CC} & A(v_p - v_n) < -V_{CC} \\ A(v_p - v_n) & -V_{CC} \le A(v_p - v_n) \le +V_{CC} \\ +V_{CC} & A(v_p - v_n) > +V_{CC} \end{cases}$$

Operational Amplifier

- Ideal Op-Amp:

•For an ideal op-amp the gain is infinite. Therefore the linear operating region reduces to the single point:

$$\boxed{v_p = v_n}$$

•For an ideal op-amp the input resistance is infinite, resulting in the current constraint:

$$\boxed{i_p = i_n = 0}$$

Operational Amplifier

- Ideal Op-Amp Analysis Steps:

  1. We assume that the op-amp is in linear operation.
  2. We perform circuit analysis,
     - Use voltage and current constraints and perform KCL.
  3. Check the output voltage for contradictions.
  4. If the output is higher than V_{CC} then a contradiction occurs, and the op-amp must be saturated at V_{CC}.
  5. If the output is lesser than $-V_{CC}$ then a contradiction occurs, and the op-amp must be saturated at $-V_{CC}$.

Operational Amplifier

- Inverting Amplifier Circuit:

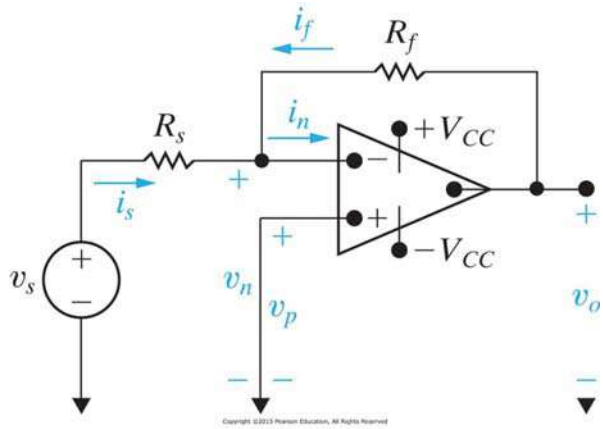

•The output is an inverted (opposite sign) and scaled version of the input.

Operational Amplifier

- Inverting Amplifier Circuit (cont.):

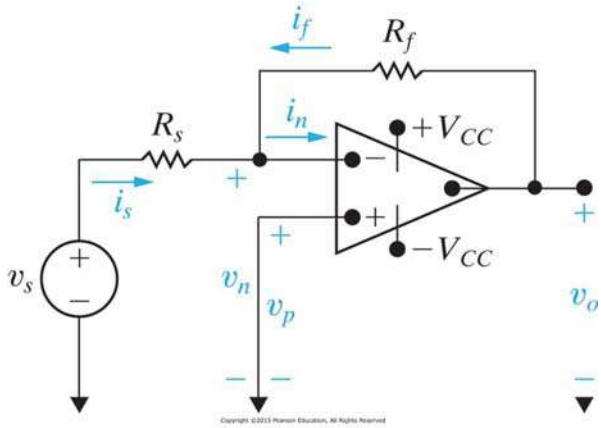

$$v_p = v_n = 0$$

$$i_p = i_n = 0 \;\Rightarrow\; i_s + i_f = 0$$

$$i_s = \frac{v_s - v_p}{R_s} = \frac{v_s}{R_s}$$

$$i_f = \frac{v_o - v_n}{R_f} = \frac{v_o}{R_f}$$

$$i_s + i_f = \frac{v_s}{R_s} + \frac{v_o}{R_f} = 0$$

$$\boxed{\Rightarrow v_o = -\frac{R_f}{R_s} v_s}$$

Operational Amplifier

- Non-Inverting Amplifier Circuit:

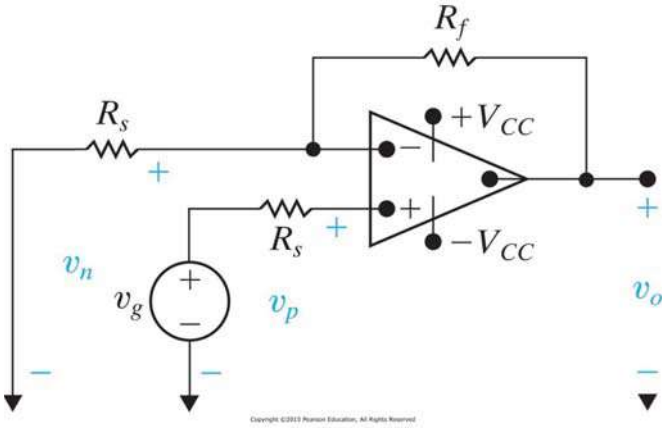

•The output is a non-inverted (same sign) and scaled version of the input.

Operational Amplifier

- Non-Inverting Amplifier Circuit (cont.):

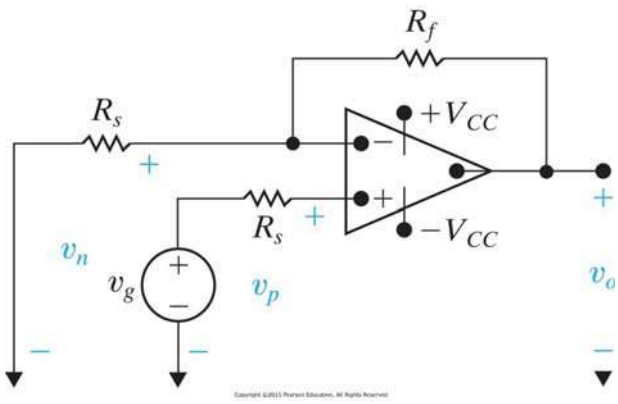

$$i_p = i_n = 0$$

$$v_p = v_n = v_g$$

Why?

$$i_s = \frac{0 - v_g}{R_s} = -\frac{v_g}{R_s}$$

$$i_f = \frac{v_o - v_g}{R_f}$$

$$i_s + i_f = -\frac{v_g}{R_s} + \frac{v_o - v_g}{R_f} = 0$$

$$\boxed{\Rightarrow v_o = \frac{R_s + R_f}{R_s} v_g}$$

Operational Amplifier

- Summing Amplifier Circuit:

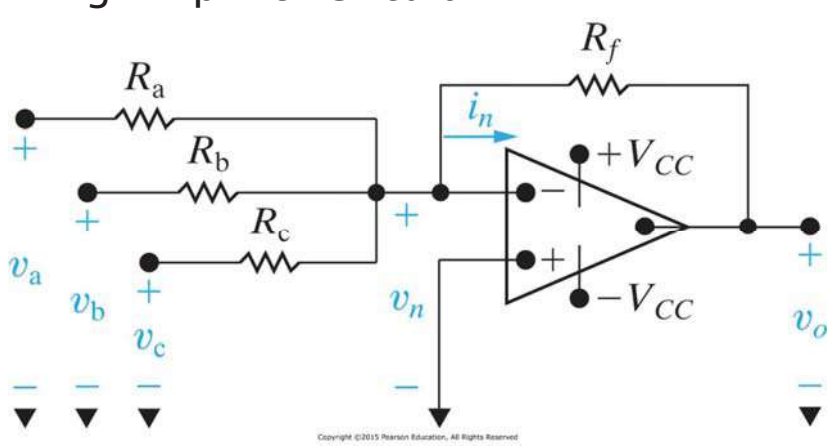

•The output is the summation of inverted and scaled versions of the inputs.

Operational Amplifier

- Summing Amplifier Circuit (cont.):

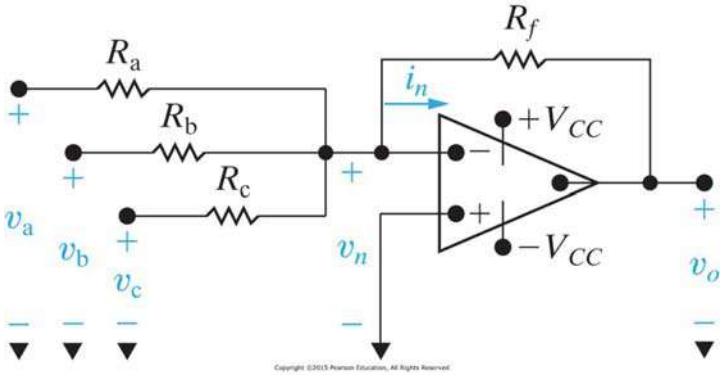

$$v_p = v_n = 0$$

$$i_p = i_n = 0$$

$$\Rightarrow i_a + i_b + i_c + i_f = 0$$

$$\frac{v_a}{R_a} + \frac{v_b}{R_b} + \frac{v_c}{R_c} + \frac{v_o}{R_f} = 0$$

$$\boxed{\Rightarrow v_o = -\left(\frac{R_f}{R_a}v_a + \frac{R_f}{R_b}v_b + \frac{R_f}{R_c}v_c\right)}$$

Operational Amplifier

- Difference Amplifier Circuit:

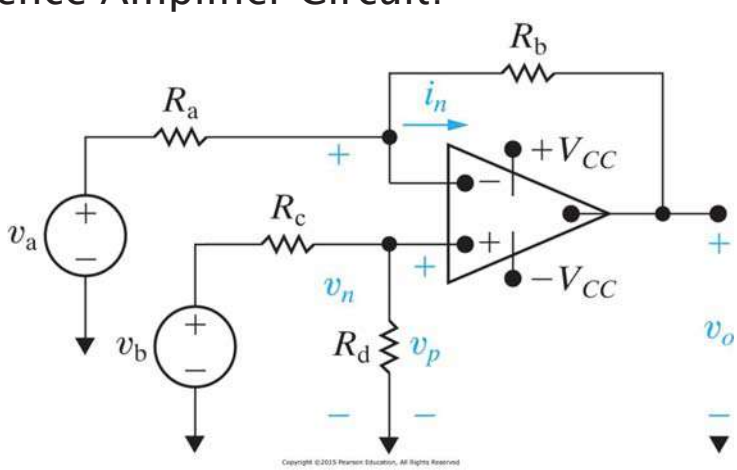

•The output is the difference of inverted and scaled versions of the inputs.

Operational Amplifier

- Difference Amplifier Circuit (cont.):

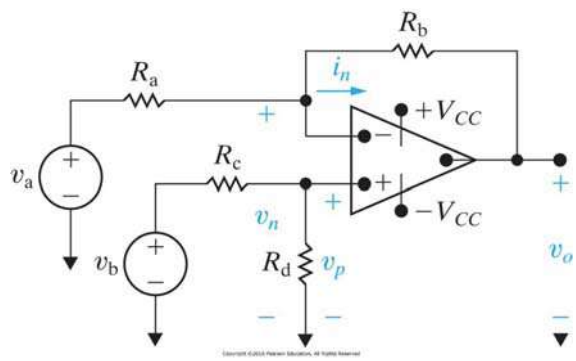

$$v_p = v_n = \frac{R_d}{R_c + R_d} v_b$$

$$i_p = i_n = 0$$

$$\Rightarrow i_a + i_b = 0$$

$$\frac{v_a - \frac{R_d}{R_c + R_d} v_b}{R_a} + \frac{v_o - \frac{R_d}{R_c + R_d} v_b}{R_b} = 0$$

$$\boxed{\Rightarrow v_o = \frac{R_d (R_a + R_b)}{R_a (R_c + R_d)} v_b - \frac{R_b}{R_a} v_a}$$

Operational Amplifier

- Integrating Amplifier Circuit:

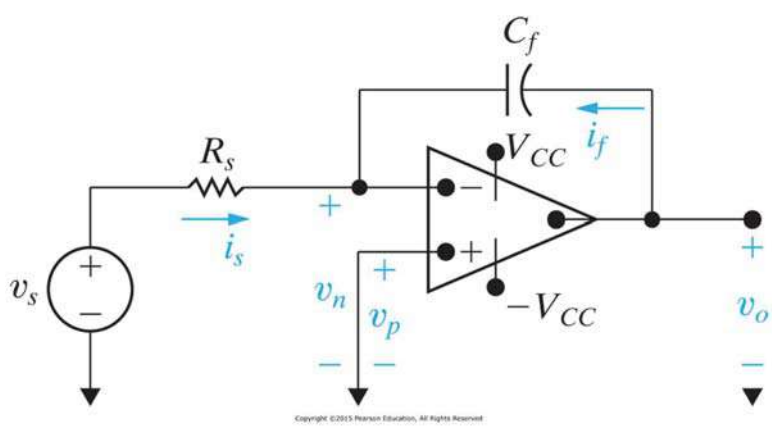

•The output is a integrated and scaled version of the input.

Operational Amplifier

- Integrating Amplifier Circuit (cont.):

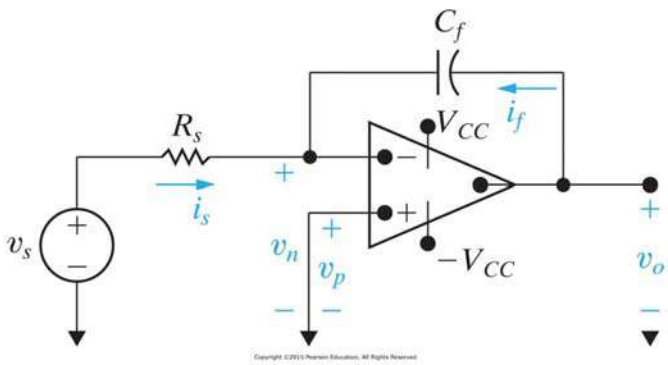

$$v_p = v_n = 0$$

$$i_p = i_n = 0 \;\Rightarrow\; i_s + i_f = 0$$

$$i_s = \frac{v_s - v_n}{R_s} = \frac{v_s}{R_s}$$

$$i_f = C\frac{d(v_o - v_n)}{dt} = C\frac{dv_o}{dt}$$

$$i_s + i_f = \frac{v_s}{R_s} + C\frac{dv_o}{dt} = 0$$

$$\frac{dv_o}{dt} = -\frac{1}{R_s C}v_s \Rightarrow \int_{v_o(t_0)}^{v_o(t)} dv_o = -\frac{1}{R_s C}\int_{t_0}^{t} v_s dt$$

$$\boxed{\Rightarrow v_o(t) = -\frac{1}{R_s C}\int_{t_0}^{t} v_s dt + v_o(t_0)}$$

Operational Amplifier

- Differentiating Amplifier Circuit:

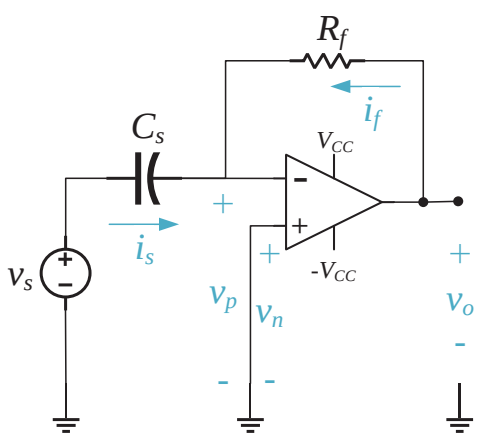

•The output is a differentiated and scaled version of the input.

Operational Amplifier

- Differentiating Amplifier Circuit (cont.):

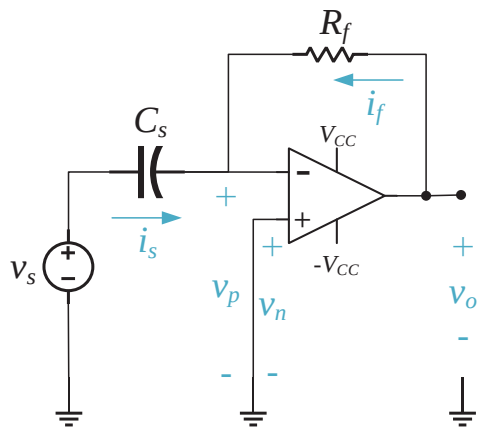

$$v_p = v_n = 0$$

$$i_p = i_n = 0 \;\Rightarrow\; i_s + i_f = 0$$

$$i_s = C\frac{d(v_s - v_p)}{dt} = C\frac{dv_s}{dt}$$

$$i_f = \frac{v_o - v_n}{R_f} = \frac{v_o}{R_f}$$

$$i_s + i_f = C\frac{dv_s}{dt} + \frac{v_o}{R_f} = 0$$

$$\boxed{\Rightarrow v_o(t) = -R_f C\frac{dv_s}{dt}}$$

Operational Amplifier

- Ideal Op-Amp Analysis Steps (review):

1. We assume that the op-amp is in linear operation.
2. We perform circuit analysis,
   - Use voltage and current constraints and perform KCL.
3. Check the output voltage for contradictions. If output voltage is between ($-V_{CC}$, $+V_{CC}$) then op-amp is in linear region. Leave the result as is.
4. If the output is higher than V_{CC} then a contradiction occurs, and the op-amp must be saturated at V_{CC}.
5. If the output is lesser than $-V_{CC}$ then a contradiction occurs, and the op-amp must be saturated at $-V_{CC}$.

Operational Amplifier

- Qn. 1: If v_a=1V and v_b=0V then find v_o?
  If v_a=1.5V then find the limits of v_b for the op-amp to stay in linear region.

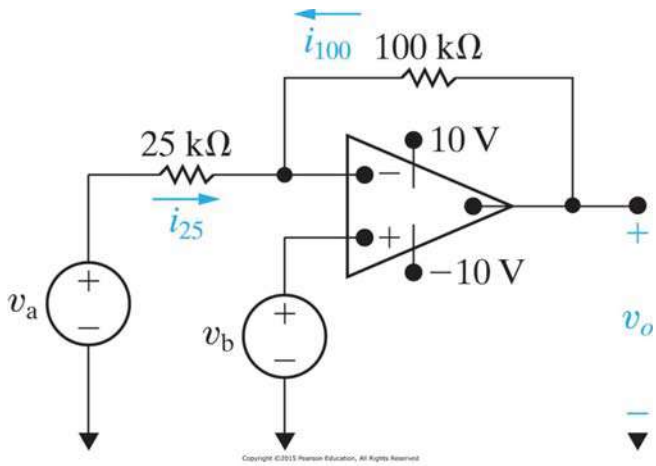

Operational Amplifier

- Qn. 1 (cont.): If v_a=1V and v_b=0V then find v_o?

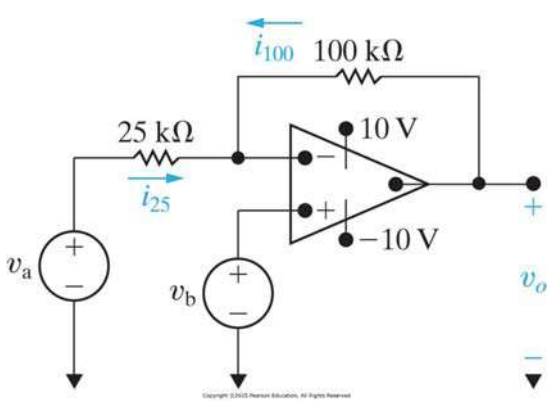

$$v_p = v_n = v_b = 0$$

$$i_p = i_n = 0 \;\Rightarrow\; i_{25} + i_{100} = 0$$

$$i_{25} = \frac{v_a}{25k} = 0.04mA$$

$$i_{100} = -i_{25} = -0.04mA = \frac{v_o}{100k}$$

$$\boxed{\Rightarrow v_o = -4V}$$

Inside the limits. Op-amp is in linear region.

Operational Amplifier

- Qn. 1 (cont.): If v_a=1.5V then find the limits of v_b for the op-amp to stay in linear region.

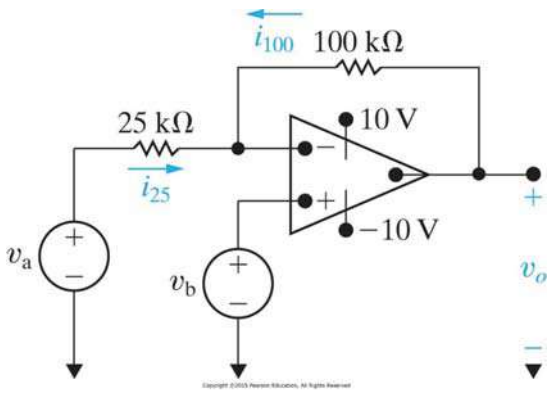

$$v_p = v_n = v_b$$

$$i_p = i_n = 0 \;\Rightarrow\; i_{25} + i_{100} = 0$$

$$i_{25} = \frac{v_a - v_p}{25k} = \frac{1.5 - v_b}{25k}$$

$$i_{100} = -i_{25} = -\frac{1.5 - v_b}{25k} = \frac{v_o - v_b}{100k}$$

$$-6 + 4v_b = v_o - v_b$$

$$v_o = 5v_b - 6, \qquad -10 \le v_o \le 10$$

$$\Rightarrow -10 \le 5v_b - 6 \le 10$$

$$\boxed{-0.8V \le v_b \le 3.2V}$$

Operational Amplifier

- Qn. 2: What is v_o if the var. resistance is 60kΩ? What is the max value of var. resistance in order for the op-amp to stay in lin. region?

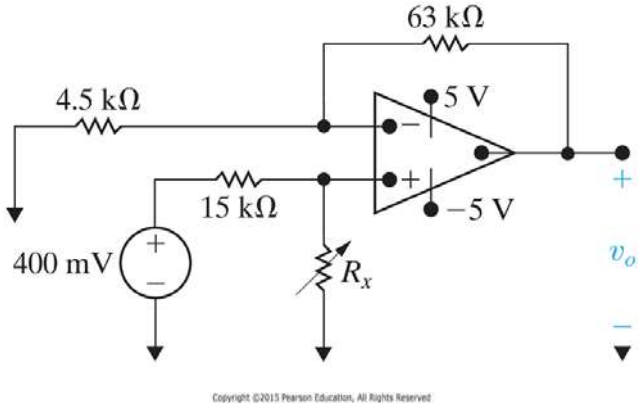

Operational Amplifier

- Qn. 2 (cont.): What is v_o if the var. resistance is 60kΩ?

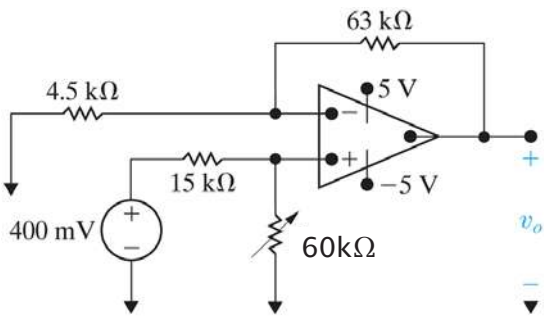

Copyright ©2015 Pearson Education, All Rights Reserved

$$v_p = v_n = \frac{60}{75}0.4V$$ Why?

$$i_p = i_n = 0$$

$$\frac{0-0.32}{4.5k} + \frac{v_o - 0.32}{63k} = 0$$

$$\Rightarrow v_o = 4.8V$$

Operational Amplifier

- Qn. 2 (cont.): What is the max value of var. resistance in order for the op-amp to stay in lin. region.

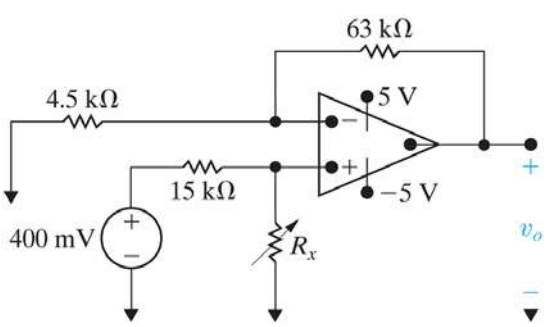

Copyright ©2015 Pearson Education, All Rights Reserved

$$v_p = v_n = \frac{R_x}{15+R_x}0.4V$$

$$i_p = i_n = 0$$

$$\frac{0 - \frac{R_x}{15+R_x}0.4}{4.5k} + \frac{v_o - \frac{R_x}{15+R_x}0.4}{63k} = 0$$

$$4.5kv_o = \frac{63kR_x}{15+R_x}0.4 + \frac{4.5kR_x}{15+R_x}0.4$$

$$v_o = \frac{6R_x}{15+R_x}, \quad -5V \le v_o \le +5V$$

$$-5 \le \frac{6R_x}{15+R_x} \le +5$$

$$\Rightarrow R_x \le +75k\Omega$$

Operational Amplifier

- Qn. 3: If v_b=4.0V then what is the max value of v_a for the op-amp to stay in linear region?

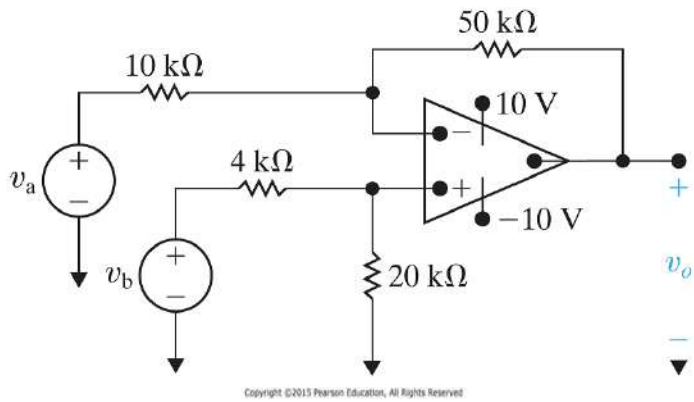

Operational Amplifier

- Qn. 3 (cont.): If v_b=4.0V then what is the max value of v_a for the op-amp to stay in linear region.

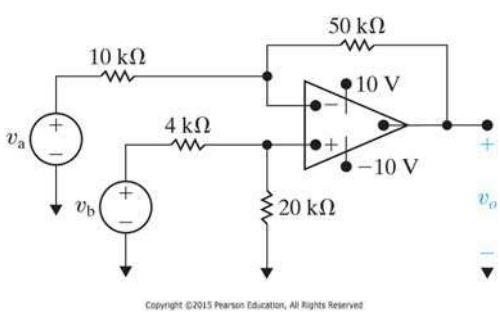

$$v_p = v_n = \frac{20}{24}4V = 3.33V$$

$$i_p = i_n = 0$$

$$\Rightarrow i_a + i_b = 0$$

$$\frac{v_a - 3.33}{10k} + \frac{v_o - 3.33}{50k} = 0$$

$$v_o = 20 - 5v_a$$

$$-10 \le v_o \le +10$$

$$-10 \le 20 - 5v_a \le +10$$

$$\Rightarrow 2 \le v_a \le 6$$

ELE 296 Basic Electric Circuits and Electronics

- Digital Integrated Circuits
  - Resistor-Transistor Logic (RTL)
  - Diode-Transistor Logic (DTL)
  - Transistor-Transistor Logic (TTL)

RTL

- As the name suggests, we use resistors and transistors to form logic circuits in RTL.
- Logic operations are realized in the cut-off and saturation regions of the transistor.
- Therefore, we need to find the characteristics of the transistor with respect to the input values.

RTL

- RTL Inverter:

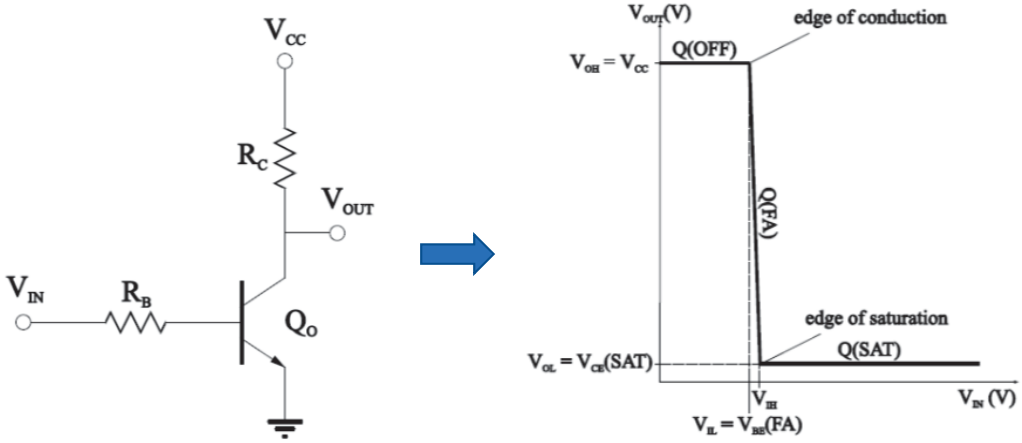

- Input 0V -> Transistor Cut-Off -> Output V_{CC}
- Input 0.7V -> Transistor F. A. -> Output $V_{CC} - I_C R_C$
- Input>0.7V -> Transistor SAT -> Output V_{CE}(SAT)

Copyright © 2000-2018 by John Wiley & Sons, Inc.

RTL

- RTL Inverter (cont.):

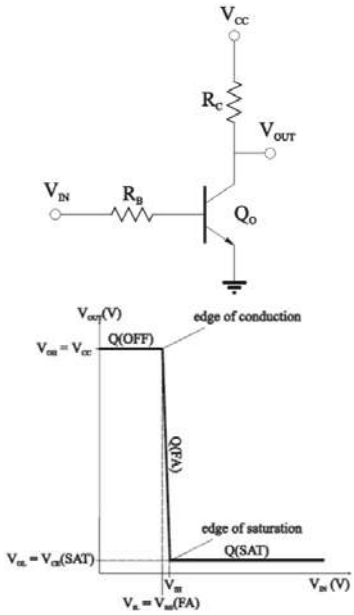

$$V_{IN} = 0 \Rightarrow V_{OUT} = V_{CC} = V_{OH}$$

Copyright © 2000-2018 by John Wiley & Sons, Inc.

RTL

- RTL Inverter (cont.):

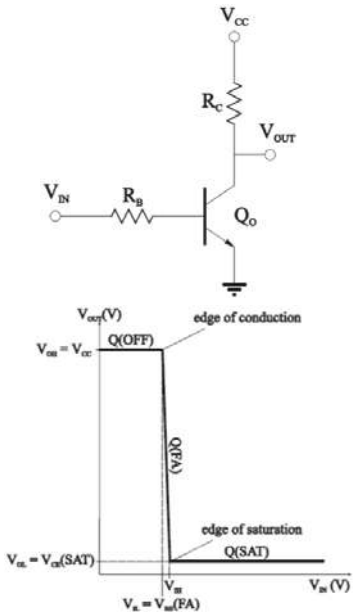

$$V_{BE(F.A.)} = 0.7V$$

$$V_{IN} = 0.7 = V_{IL} \Rightarrow V_{OUT} = V_{CC}$$

Copyright © 2000-2018 by John Wiley & Sons, Inc.

RTL

- RTL Inverter (cont.):

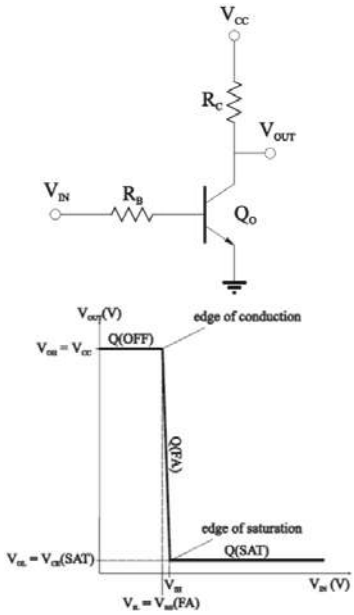

$$V_{BE(F.A.)} = 0.7V$$

$$V_{IN} = I_B R_B + V_{BE} = I_B R_B + 0.7$$

$$I_B = \frac{V_{IN} - V_{BE}}{R_B}$$

$$V_{OUT} = V_{CE} = V_{CC} - I_C R_C = V_{CC} - \beta \frac{V_{IN} - 0.7}{R_B} R_C$$

Copyright © 2000-2018 by John Wiley & Sons, Inc.

RTL

- RTL Inverter (cont.):

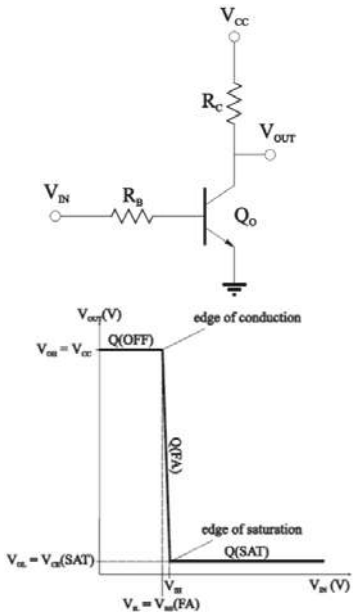

$$V_{CE} = V_{CE(SAT)} = 0.2V, V_{BE} = V_{BE(SAT)} = 0.8V$$

$$\Rightarrow V_{OUT} = V_{CE(SAT)} = 0.2V = V_{OL}$$

$$\Rightarrow V_{CE} = V_{CE(SAT)} = 0.2V = V_{CC} - \beta \frac{V_{IN} - 0.8}{R_B} R_C$$

$$V_{IN} = \frac{V_{CC} - 0.2}{\beta R_C} R_B + 0.8 = V_{IH}$$

Copyright © 2000-2018 by John Wiley & Sons, Inc.

RTL

- RTL NOR:

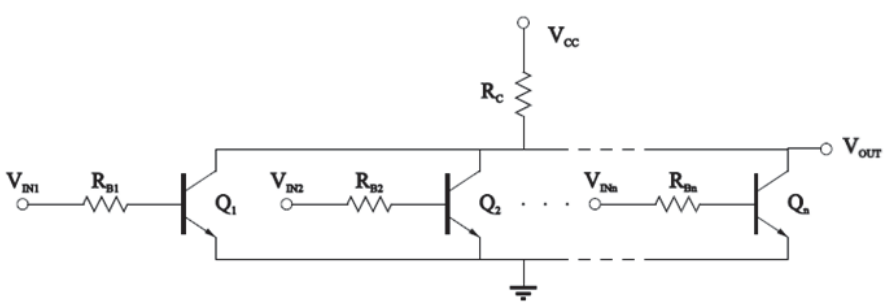

IN1	IN2	O
0	0	1
0	1	0
1	0	0
1	1	0

When all inputs are lower than V_{BE}(ON), transistors will be Cut-Off. Therefore, no current will be on R_C and the output will be V_{CC}.

When either input is higher than V_{BE}(SAT), that input's transistor will be in Saturation. Therefore, there will be current on R_C and the output will be V_{CE}(SAT).

Copyright © 2000-2018 by John Wiley & Sons, Inc.

RTL

- RTL NAND:

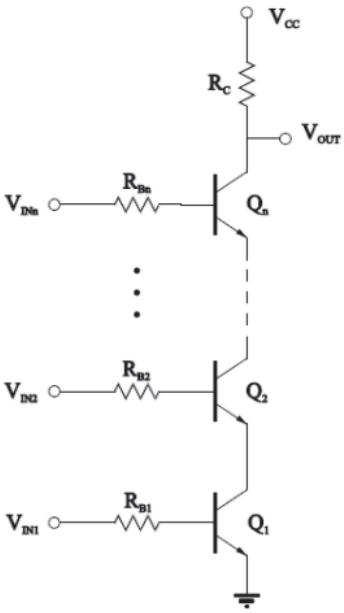

When either input is lower than $V_{BE\,(ON)}$, that input's transistor will be in Cut-Off. Therefore no current will be on R_C and the output will be V_{CC}.

When all inputs are higher than $V_{BE\,(SAT)}$, all transistors will be in Saturation. Therefore, there will be current on R_C and the output will be $n \times V_{CE\,(SAT)}$.

IN1	IN2	O
0	0	1
0	1	1
1	0	1
1	1	0

Copyright © 2000-2018 by John Wiley & Sons, Inc.

RTL

- RTL Non-Inverter)

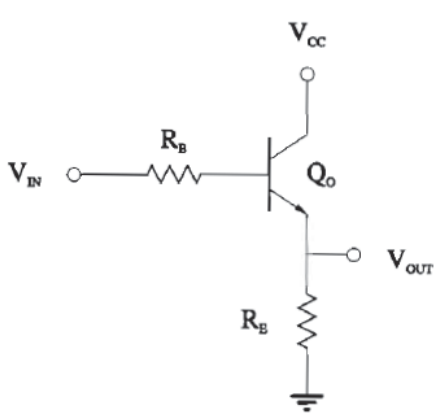

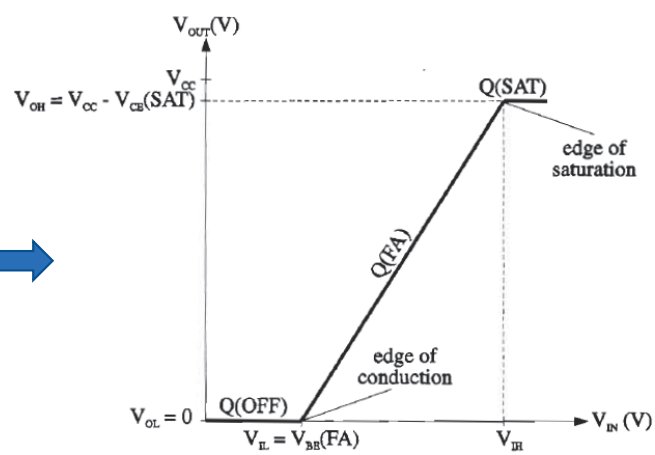

- Input 0V -> Transistor Cut-Off -> Output 0
- Input 0.7V -> Transistor F.A. -> Output 0 and rising
- Input>0.7V -> Transistor SAT -> Output $V_{CC} - V_{CE\,(SAT)}$

Copyright © 2000-2018 by John Wiley & Sons, Inc.

RTL

- RTL Non-Inverter (cont.):

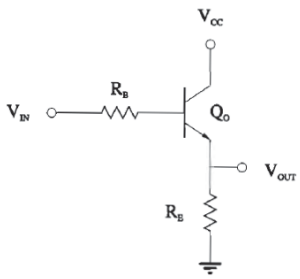

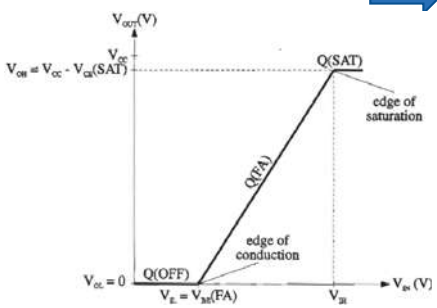

$$V_{IN} = 0 \Rightarrow V_{OUT} = 0 = V_{OL}$$

$$V_{IN} = V_{BE(ON)} = 0.7V = V_{IN} \Rightarrow V_O = 0 = V_{OL}$$

Copyright © 2000-2018 by John Wiley & Sons, Inc.

RTL

- RTL Non-Inverter (cont.):

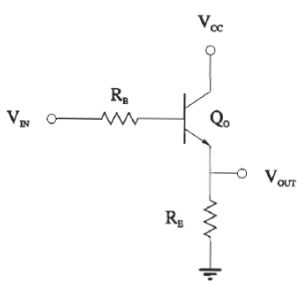

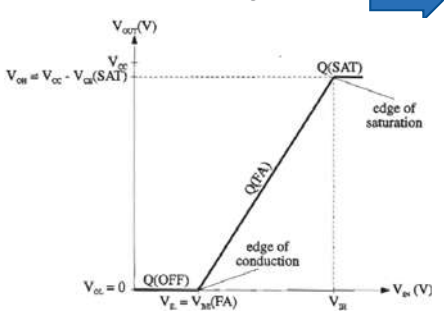

$$V_{IN} = I_B R_B + V_{BE} + I_E R_E = I_B\left[R_B + (\beta+1)R_E\right] + 0.7$$

$$I_B = \frac{V_{IN} - 0.7}{R_B + (\beta+1)R_E}$$

$$V_{OUT} = V_{CE} = I_E R_E = (\beta+1)\frac{V_{IN} - 0.7}{R_B + (\beta+1)R_E} R_E$$

Copyright © 2000-2018 by John Wiley & Sons, Inc.

RTL

- RTL Non-Inverter (cont.):

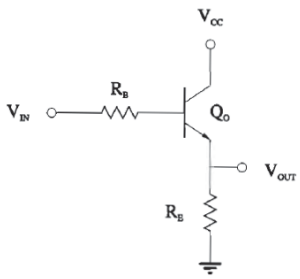

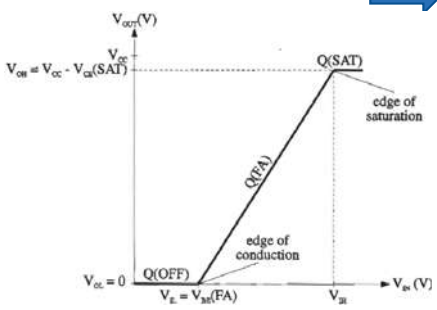

$$V_{BE(SAT)} = 0.8V, V_{CE(SAT)} = 0.2V$$

$$V_{OUT} = I_E R_E = V_{CC} - V_{CE}$$

$$V_{OUT} = V_{CC} - V_{CE(SAT)} = V_{CC} - 0.2 = V_{OH}$$

$$V_{OUT} = V_{CC} - 0.2 = I_E R_E = (\beta+1)\frac{V_{IN} - 0.8}{R_B + (\beta+1)R_E} R_E$$

$$V_{IN} = \frac{V_{CC} - 0.2}{(\beta+1)R_E}\left[R_B + (\beta+1)R_E\right] + 0.8 = V_{IH}$$

Copyright © 2000-2018 by John Wiley & Sons, Inc.

RTL

- RTL OR:

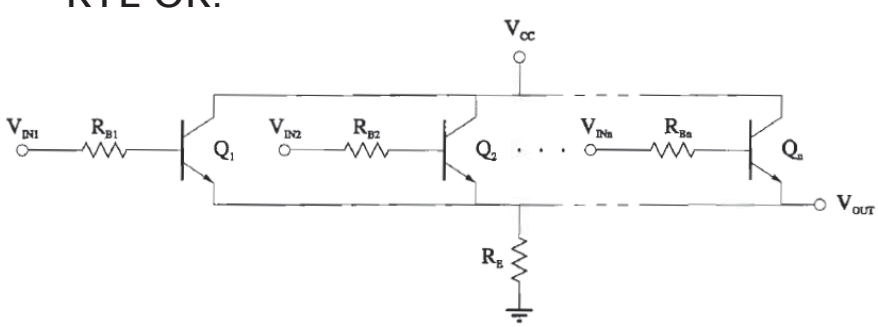

IN1	IN2	O
0	0	0
0	1	1
1	0	1
1	1	1

When all inputs are lower than V_{BE} (ON), transistors will be Cut-Off. Therefore, no current will be on R_B and the output will be 0.

When either input is higher than V_{BE} (SAT), that input's transistor will be in Saturation. Therefore, there will be current on R_B and the output will be $V_{CC}-V_{CE}$(SAT).

Copyright © 2000-2018 by John Wiley & Sons, Inc.

RTL

- RTL AND:

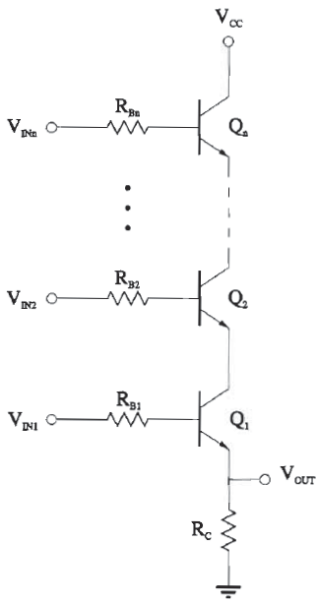

When either input is lower than $V_{BE\,(ON)}$, that input's transistor will be in Cut-Off. Therefore no current will be on R_C and the output will be 0.

When all inputs are higher than $V_{BE\,(SAT)}$, all transistors will be in Saturation. Therefore, there will be current on R_C and the output will be $V_{CC} - n \times V_{CE\,(SAT)}$.

IN1	IN2	O
0	0	0
0	1	0
1	0	0
1	1	1

Copyright © 2000-2018 by John Wiley & Sons, Inc.

DTL

- As the name suggests, we use diodes and transistors and of course resistors to form logic circuits in DTL.
- We need to find the characteristics of the transistors with respect to the input values.
- Moreover, we need to understand the 'ON' or 'OFF' states of the diodes.

DTL

- DTL Inverter:

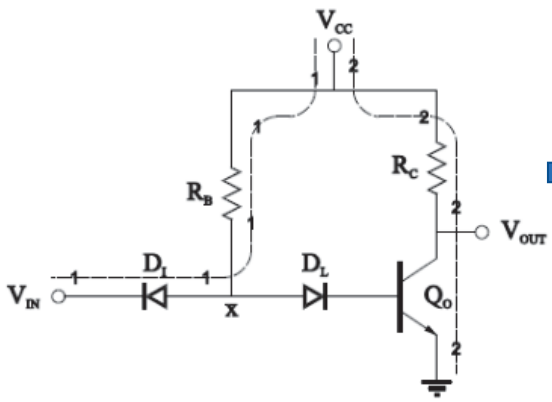

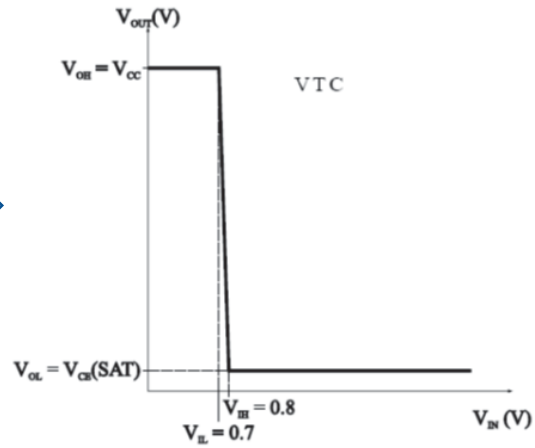

- Input 0V -> Transistor Cut-Off -> Output V_{CC}
- Input 0.7V -> Transistor F.A. -> Output $V_{CC} - I_C R_C$
- Input>0.8V -> Transistor SAT -> Output V_{CE}(SAT)

Copyright © 2000-2018 by John Wiley & Sons, Inc.

DTL

- DTL Inverter (cont.):

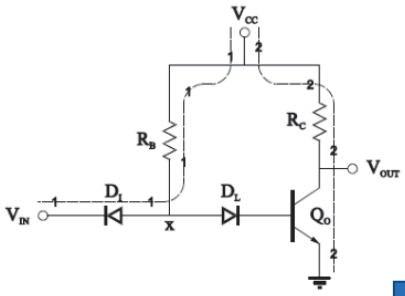

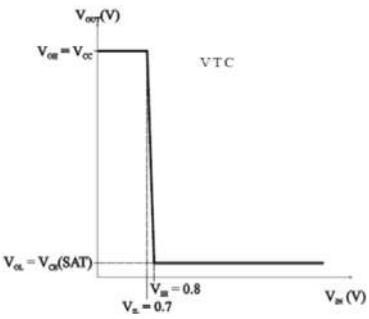

$$V_x = V_{IN} + V_{DI(ON)} \Rightarrow V_B = V_{IN} + V_{DI(ON)} - V_{DL(ON)} = V_{IN}$$
$$\Rightarrow V_{IL} \le V_{BE(ON)} = 0.7V \Rightarrow V_O = V_{CC} = V_{OH}$$

$$V_{IH} = ?$$
$$SAT \Rightarrow V_{CE} = V_{CE(SAT)} = 0.2V, V_{BE} = V_{BE(SAT)} = 0.8V$$
$$V_B = 0.8V = V_{IN} + V_{DI(ON)} - V_{DL(ON)} = V_{IN}$$
$$V_{IH} = 0.8V$$

Copyright © 2000-2018 by John Wiley & Sons, Inc.

DTL

- DTL NAND:

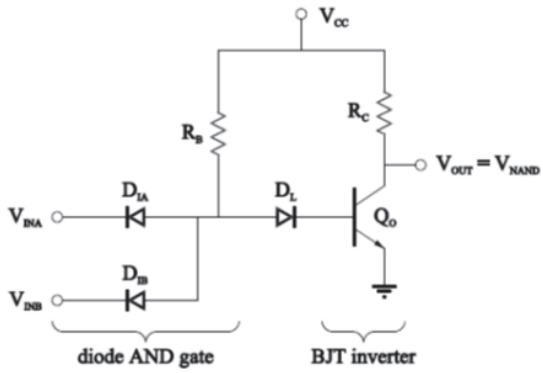

IN1	IN2	O
0	0	1
0	1	1
1	0	1
1	1	0

When either input is lower than $V_{BE\,(ON)}$, V_X will also be low and the transistor will be in Cut-Off. Therefore, no current will be on R_C and the output will be V_{CC}.

When all inputs are higher than $V_{BE(SAT)}$, the transistor will be in Saturation. Therefore, there will be current on R_C and the output will be $V_{CE\,(SAT)}$.

Copyright © 2000-2018 by John Wiley & Sons, Inc.

TTL

- As the name suggests, we use transistors and of course resistors to form logic circuits in TTL.
- We need to find the characteristics of the transistors with respect to the input values.

TTL

- TTL Inverter:

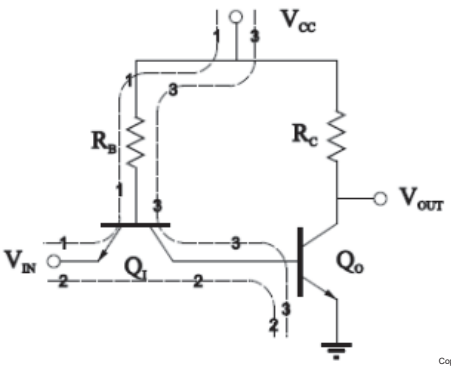

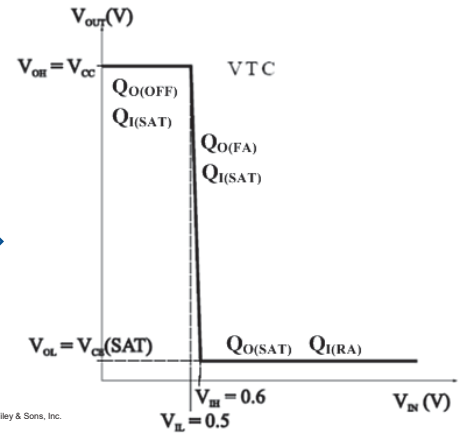

Copyright © 2000-2018 by John Wiley & Sons, Inc.

- Input 0V -> Q_I BE junc. ON but Q_O BE junc. OFF -> Q_I SAT, Q_O Cut-Off
  -> Output V_{CC}
- Input 0.5V -> Q_I BE junc. ON and Q_O BE junc. ON -> Q_I SAT, Q_O F.A.
  -> Output $V_{CC}-I_{C,O}R_C$
- Input $\geq$0.6 -> Q_I BE junc. OFF but Q_O BE junc. ON -> Q_I SAT/R.A., Q_O SAT
  -> Output $V_{CE,O}$ (SAT)

TTL

- TTL Inverter (cont.):

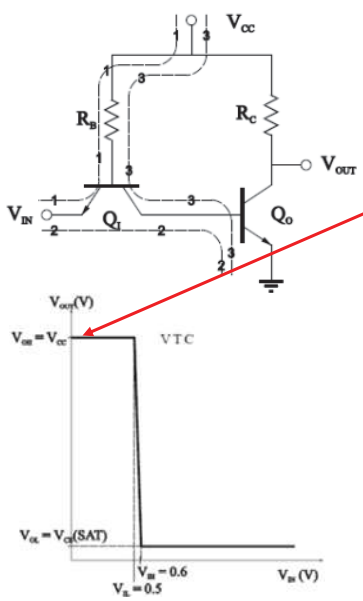

$$V_{IN} = 0 \Rightarrow \text{BE, I ON} \Rightarrow \text{Q}_\text{I} \text{ F.A. or SAT}$$

$$V_{CC} = I_{B,I}R_B + V_{BE} + V_{IN}$$

$$\Rightarrow I_{B,I} = \frac{V_{CC} - V_{BE} - V_{IN}}{R_B} \Rightarrow \text{R}_\text{B} \text{ is chosen such that this current is too high}$$

$$\text{Q}_\text{I} \text{ SAT} \Rightarrow V_{BE,O} = V_{IN} + V_{CE,I(SAT)} = 0.2V \Rightarrow \text{Q}_\text{O} \text{ CUT-OFF}$$

$$\Rightarrow V_{OUT} = V_{CC} = V_{OH}$$

Copyright © 2000-2018 by John Wiley & Sons, Inc.

TTL

- TTL Inverter (cont.):

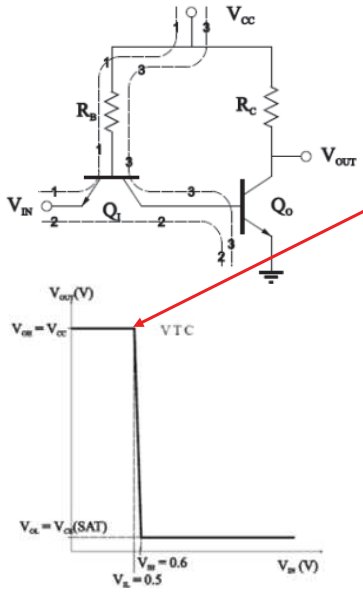

$$V_{IN} = V_{IL} = 0.5V \Rightarrow \text{BE,I ON} \Rightarrow \text{Q}_\text{I} \text{ SAT}$$

$$V_{BE,O} = V_{IN} + V_{CE,I(SAT)} = 0.7V \Rightarrow \text{BE,O ON} \Rightarrow \text{Q}_\text{O} \text{ F.A.}$$

$$V_{OUT} = V_{CE,O} = V_{CC} - I_{C,O}R_C$$

Copyright © 2000-2018 by John Wiley & Sons, Inc.

TTL

- TTL Inverter (cont.):

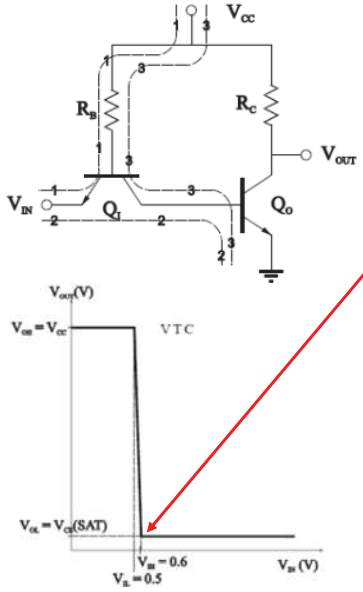

$$SAT \Rightarrow V_{CE,O} = 0.2V, V_{BE,O} = V_{BE,O(SAT)} = 0.8V$$

$$V_{B,O} = 0.8V = V_{IN} + V_{CE,I(SAT)} = V_{IN} + 0.2V$$

$$V_{IN} = V_{IH} = 0.6V$$

Copyright © 2000-2018 by John Wiley & Sons, Inc.

TTL

- TTL NAND:

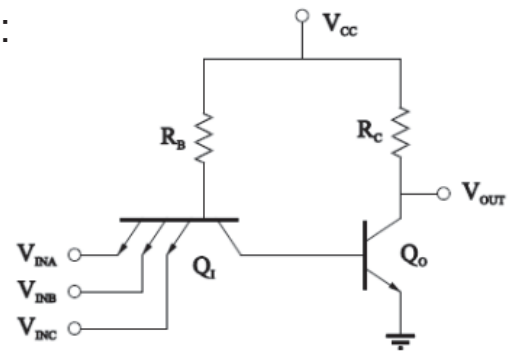

IN1	IN2	O
0	0	1
0	1	1
1	0	1
1	1	0

When either input is lower than $V_{BE\,(ON)}$, Q_I will be in Saturation and Q_O will be in Cut-Off olacaktır. Therefore the output will be V_{CC}.

When all inputs are higher than $V_{BE(SAT)}$, Q_O will be in Saturation and the output will be $V_{CE,O\,(SAT)}$.

Copyright © 2000-2018 by John Wiley & Sons, Inc.

Course Content

- ~~Circuit Components and Variables, Ohm's Law and Kirchoff's Laws~~
- ~~Circuit Analysis Techniques I - Node Voltage & Mesh Current Methods~~
- ~~Circuit Analysis Techniques II - Thevenin and Norton Equivalent Circuits~~
- ~~First Order RL and RC Circuits~~
- ~~Phasor Concept and AC Analysis of Circuits~~
- Midterm
- ~~Introduction to Semiconductors~~
- ~~Diode Applications~~
- ~~BJT Analysis~~
- ~~FET Analysis~~
- ~~Operational Amplifier~~
- Midterm
- ~~Logic Gates~~
- Make-up Exams