REVISION RECORD			
Rev.	Description	Issue	Date
00	First Issue	Martin Xie	2015-05-06

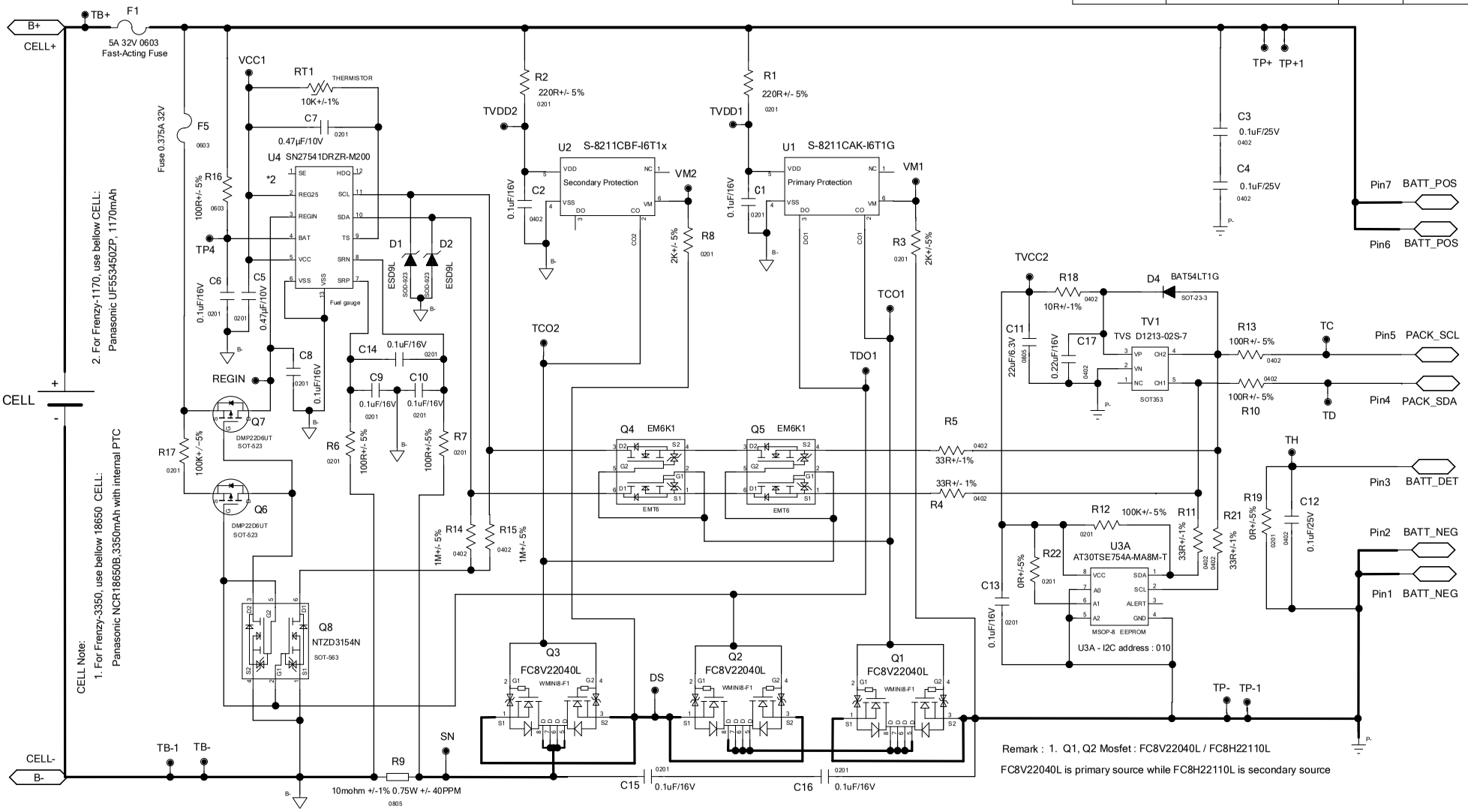

Remark : 1. Q1, Q2 Mosfet : FC8V22040L / FC8H22110L

FC8V22040L is primary source while FC8H22110L is secondary source

Leung's Communication & Electric Products (Guangzhou) LTD.		Drawed by	Checked by	Approved By
Drawing Description Frenzy-1170 / Frenzy-3350 Schematic drawing		**Drawing No.**	DWG20-00xxx
Size	C	Sheet of 1 / 1	**Part Number**	