| REVISION RECORD | | | |
|---|---|---|---|
| Rev. | Description | Issue | Date |
| R00 | First Issue | Martin Xie | 2015-12-11 |
| R01 | Add Fuel Gauge and ATECC508A<br>Change U1,U2 protect IC<br>Change Q1,Q2,Q3 Mosfet | Martin Xie | 2016-03-16 |

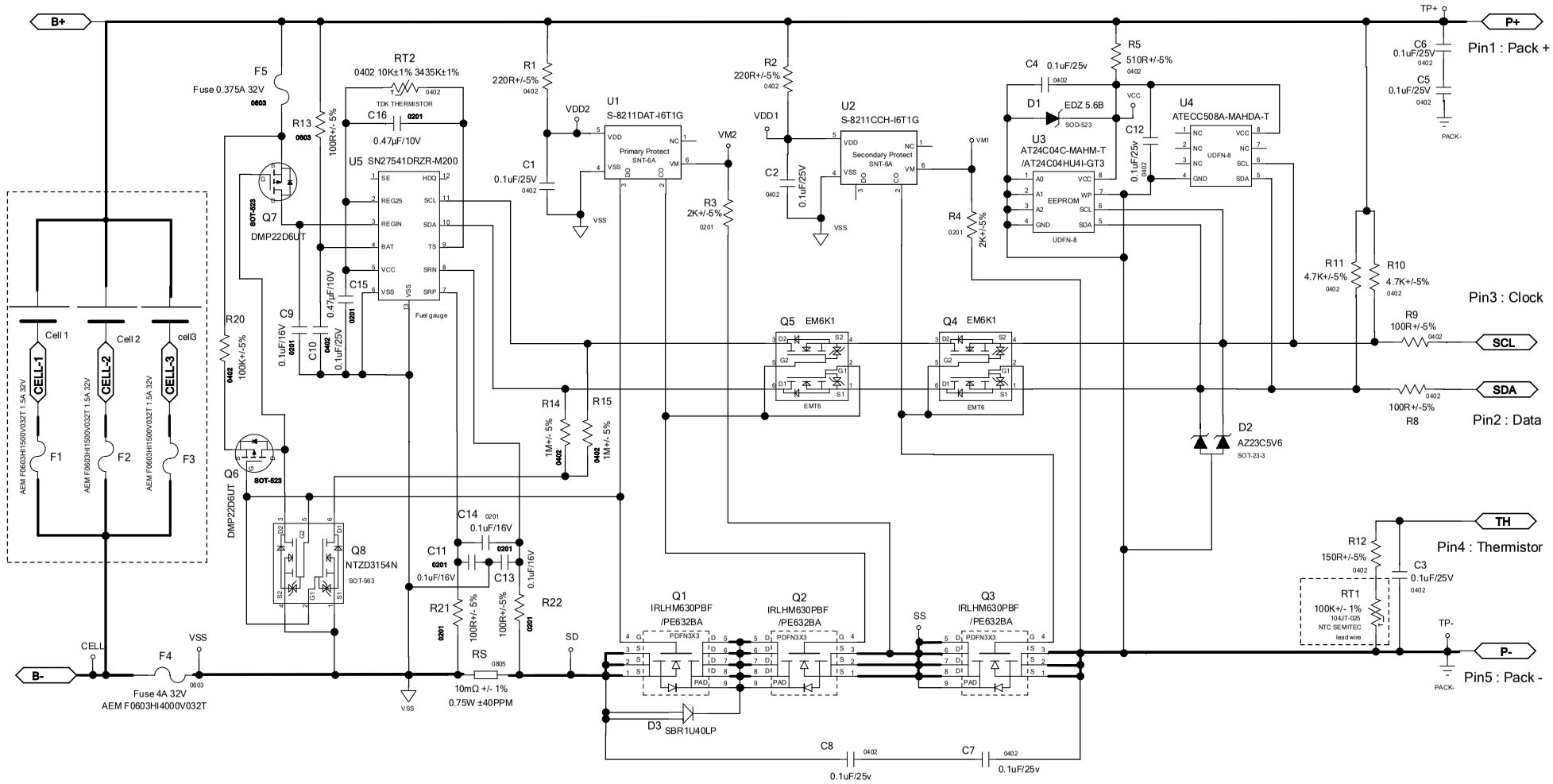


| | | | |
|---|---|---|---|
| Leung's Communication & Electric Products (Guangzhou) LTD. | Drawed by | Checked by | Approved By |
| **Drawing Description**<br>Falcon with PowerPrecision PLUS<br>Schematic drawing | **Drawing No.** | DWG20-00xxx | |
| **Size** C | Sheet of 1 / 1 | **Part Number** | |