Remark : 2. F2, F3 Fast Acting Fuse :
Fuse SART S0603-2.5A 2.5A 32V 0603 is Primary source
Fuse AEM F0603FA2500V032T 2.5A 32V 0603 is Secondary source

REVISION RECORD			
Rev.	Description	Issue	Date
00	First Issue	Martin Xie	2014-08-11

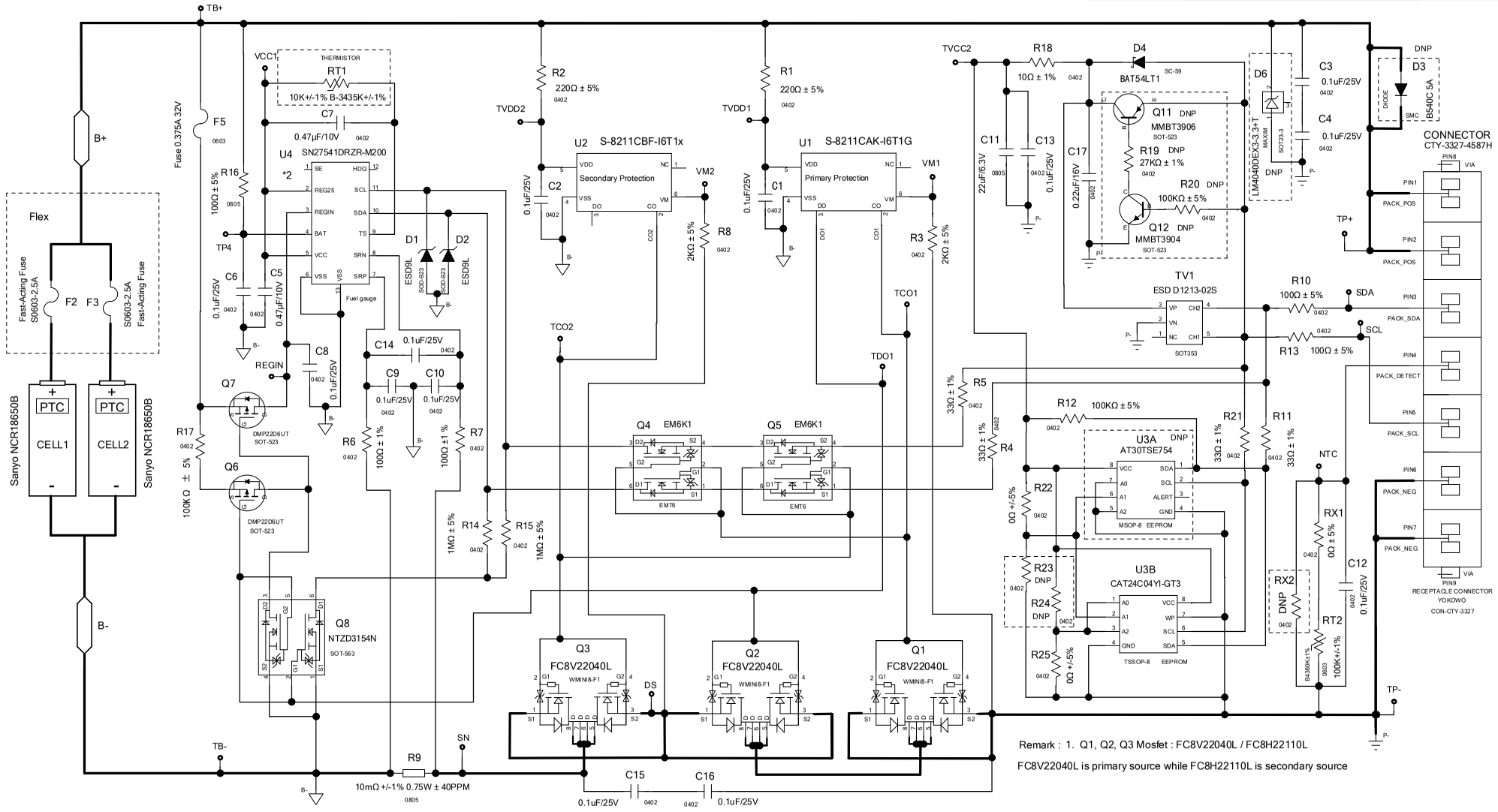

Remark : 1. Q1, Q2, Q3 Mosfet : FC8V22040L / FC8H22110L
FC8V22040L is primary source while FC8H22110L is secondary source

Leung's Communication & Electric Products (Guangzhou) LTD.	Drawed by	Checked by	Approved By
Drawing Description ROGUE_Schematic drawing			
	Drawing No.	DWG20-00914	
Size C	Sheet of 1 / 1	**Part Number**	