REVISION RECORD			
Rev.	Description	Issue	Date
R00~R02	Old version	Martin Xie	2016-06-17
R03	Change ZD1,ZD2,R10,R11	Martin Xie	2016-08-19

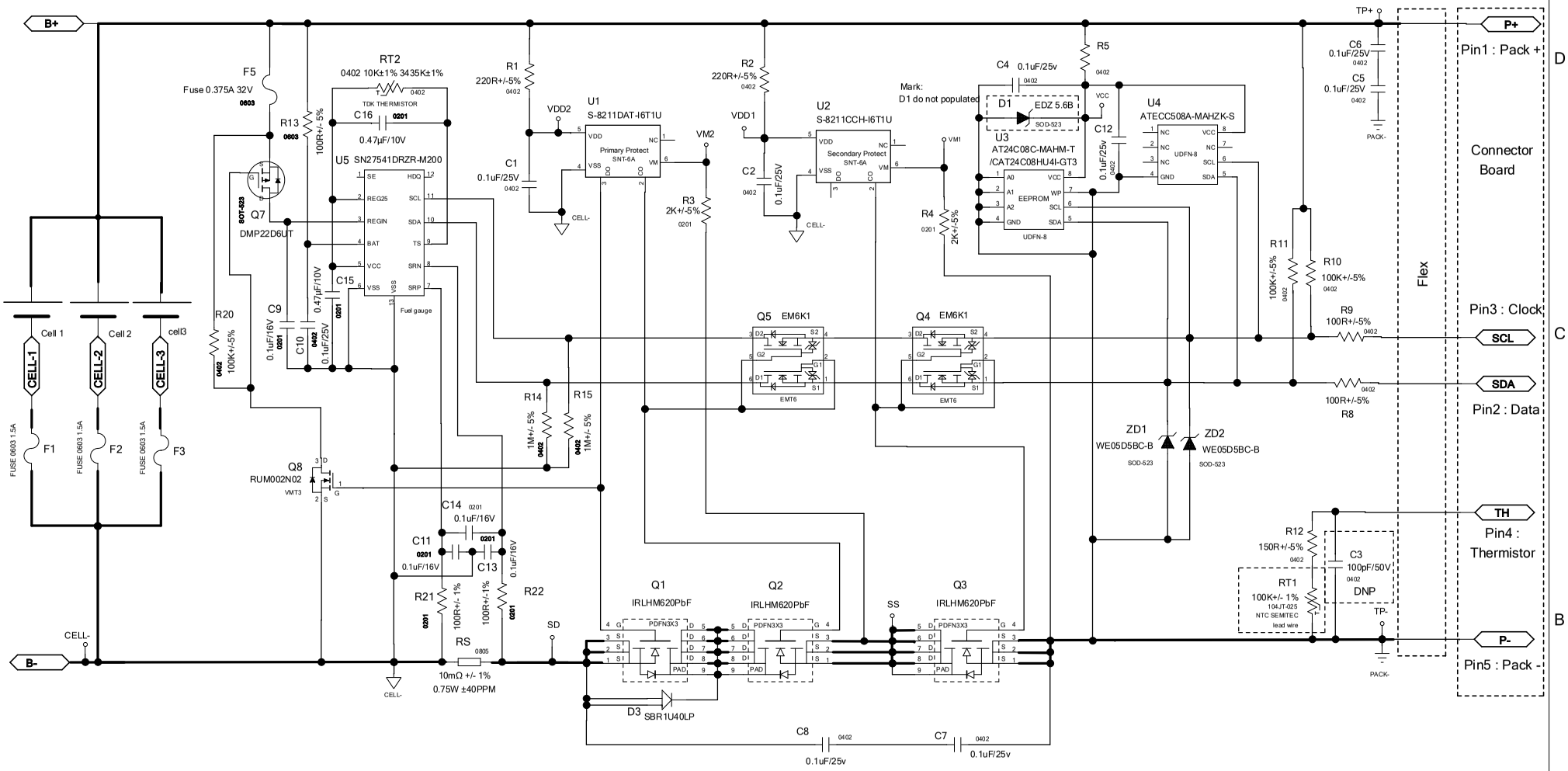

Leung's Communication & Electric Products (Guangzhou) LTD.

Drawing Description

Falcon

Schematic drawing

Drawed by	Checked by	Approved By

Drawing No.	DWG20-00xxx
Part Number	

Size	C	Sheet of	1 / 1