PDF 文件使用 "pdfFactory Pro" 试用版本创建 www.fineprint.cn

REVISION RECORD		
Revision	Description	Date
R00	Issue	2011-12-16
R01	U1 was changed from 8211CCB to 8211CBJ	2012-6-13

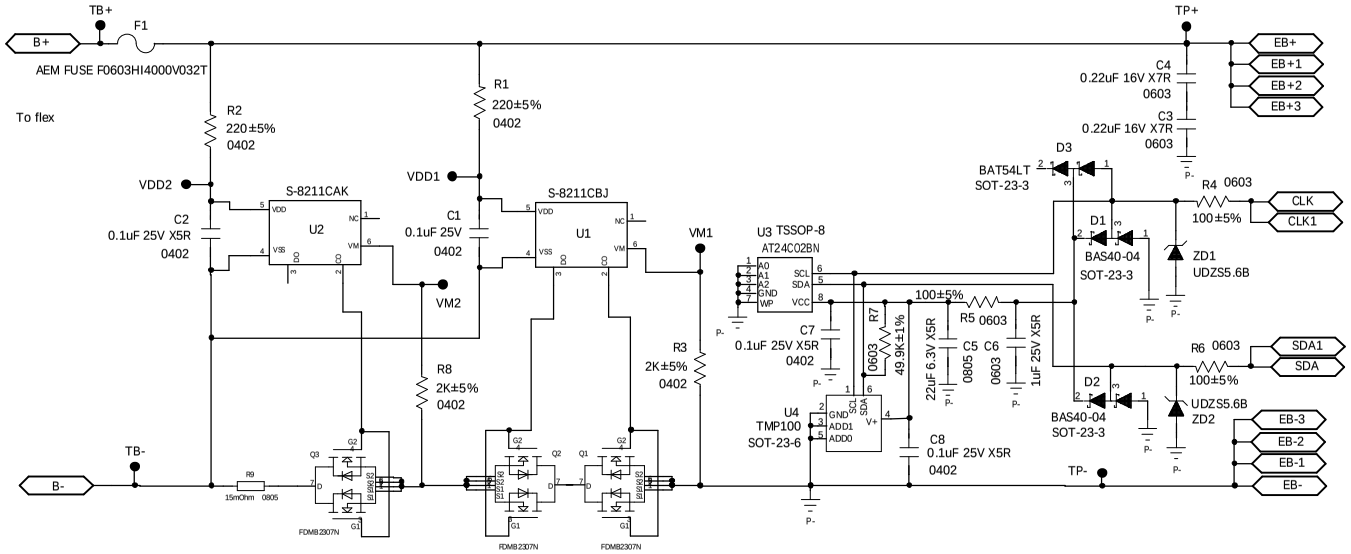

TOTAL WIRELESS SOLUTIONS INDUSTRIAL				
Title	SCH Drawing			
Drawing NO.	DWG20-00***		Model	Voltron
Drawed by	Checked by	Approved By	Revision	R01
Michael		Jason	Size	
			Sheet of	1 1
2012-6-13		2012-06-13	File	