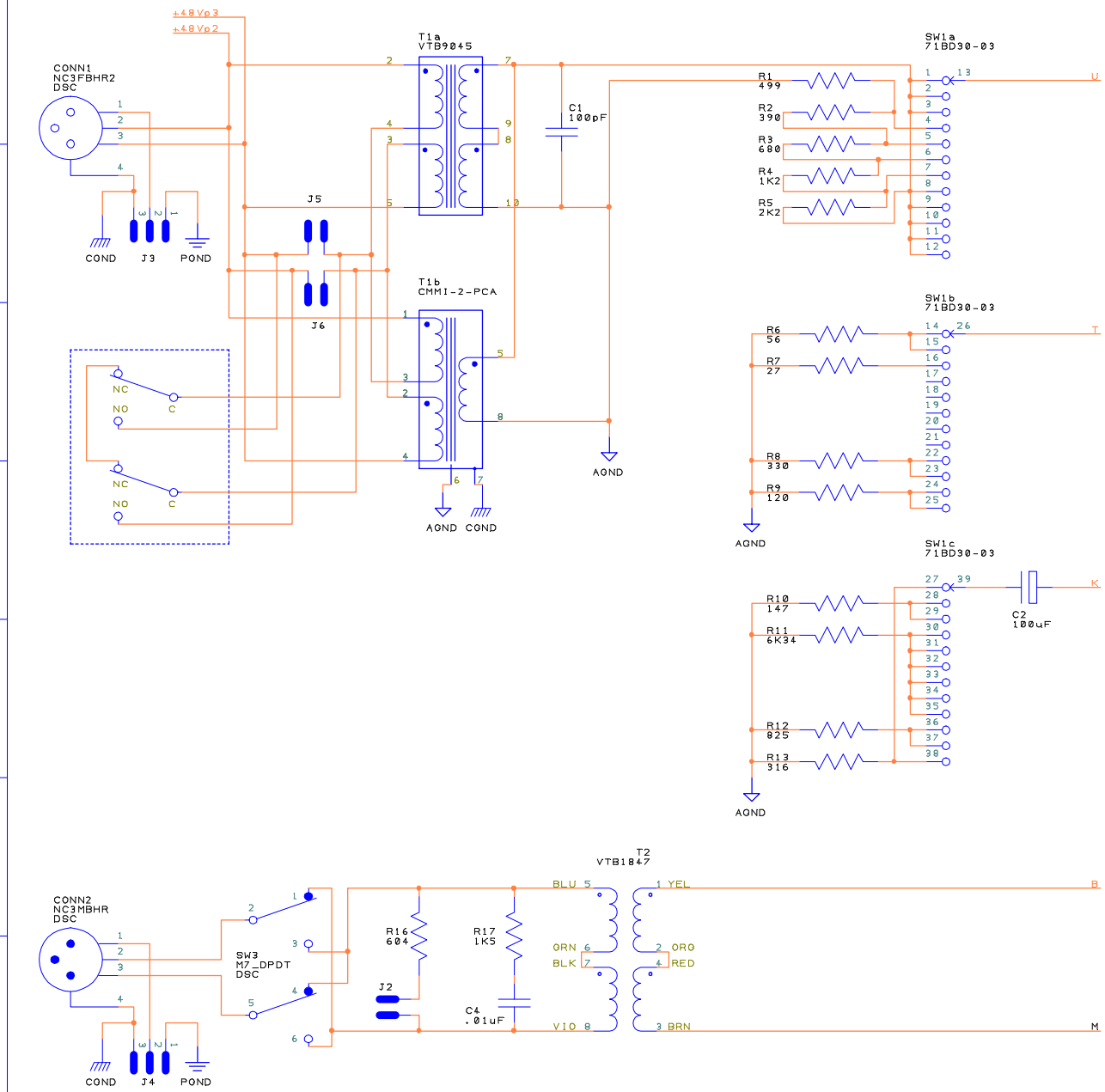

Title	N72-I/O
Created	7/1/03
Modified	7/30/08
Rev	3.1
Sheet	1 of 3

Seventh Circle Audio

1234 47th Ave
Oakland, CA 94601
510-436-4559
www.seventhcircleaudio.com