DMG48480F040_01WTC
DMG48480F040_01WTCZ01
DMG48480F040_01WTCZ02

Features:

- **Based on T5L0, running DGUS II system.**
- **4 inch, 480*480 pixels resolution, 262K colors, IPS-TFT-LCD, wide viewing angle.**
- **2.5D optical bonding process, beautiful product and reliable structure.**
- **Optional touch panel appearance of black, white and integrated black.**
- **COF structure. The entire core circuit of the smart screen is fixed on the FPC of LCM, featured by light and thin structure, low cost and easy production.**
- **50 pins, including IO, UART, CAN, AD and PWM from user CPU core for easy secondary development.**

DWIN Technology Technical Document

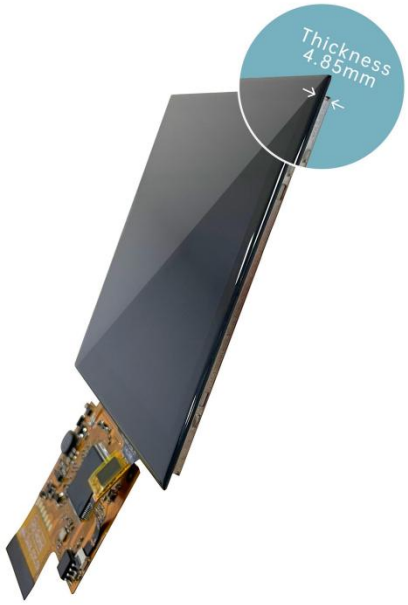

DMG48480F040_01WTC

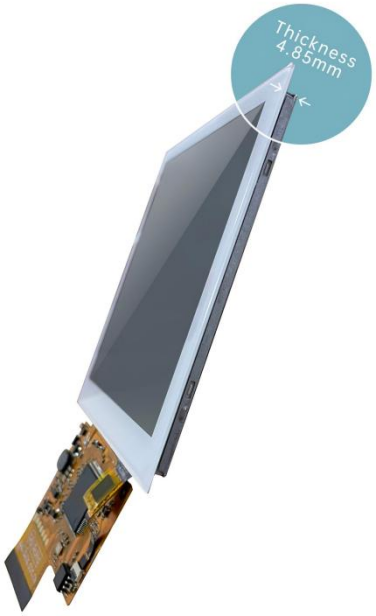

DMG48480F040_01WTCZ01

DMG48480F040_01WTCZ02

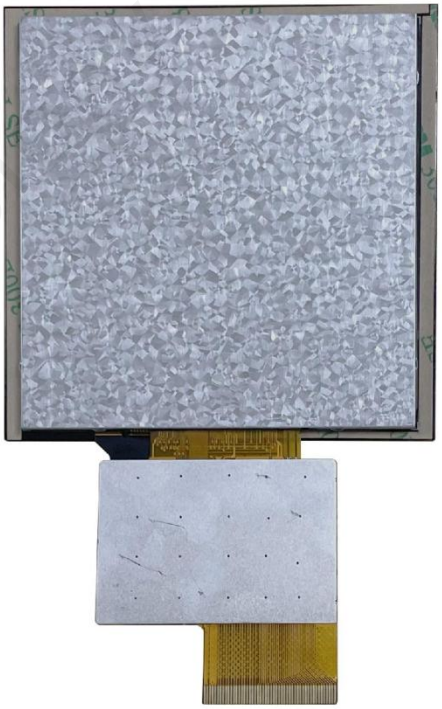

DWIN Technology Technical Document

1 External Interface

PIN	Definition	I/O	Functional Description
1	+5V	I	Power supply, DC3.6-5.5V.
2	+5V	I	
3	GND	GND	GND
4	GND	GND	
5	GND	GND	
6	AD7	I	5 input ADCs. 12-bit resolution in case of 3.3V power supply. 0-3.3V input voltage. Except for AD6, the rest data is sent to OS core via UART3 in real time with 16KHz sampling rate. AD1 and AD5 can be used in parallel, and AD3 and AD7 can be used in parallel, which equals to two 32KHz sampling AD. AD1, AD3, AD5, AD7 can be used in parallel, which equals to a 64KHz sampling AD; the data is summed 1024 times and then divided by 64 to obtain a 64Hz 16bit AD value by oversampling.
7	AD6	I	
8	AD5	I	
9	AD3	I	
10	AD1	I	
11	+3.3	O	3.3V output, maximum load of 150mA.
12	SPK	O	External MOSFET to drive buzzer or speaker. The external 10K resistor should be pulled down to the ground to ensure that power-on is low level.
13	SD_CD	IO	SD/SDHC interface,The SD_CK connects a 22pF capacitor to GND near the SD card interface.
14	SD_CK	O	
15	SD_D3	IO	
16	SD_D2	IO	
17	SD_D1	IO	
18	SD_D0	IO	
19	PWM0	O	2 16-bit PWM output. The external 10K resistor should be pulled down to the ground to ensure that power-on is low level. The OS core can be controlled in real time via UART3.
20	PWM1	O	
21	P3.3	IO	If using RX8130 or SD2058 I2C RTC to connect to both IOs, SCL should be connected to P3.2,and SDA connected to P3.3 in parallel with 10K resistor pull-up to 3.3V.
22	P3.2	IO	

DWIN Technology Technical Document

23	P3.1/EX1	IO	It can be used as an external interrupt 1 input at the same time, and supports both low voltage level or trailing edge interrupt modes.
24	P3.0/EX0	IO	It can be used as an external interrupt 0 input at the same time, and supports both low voltage level or trailing edge interrupt modes.
25	P2.7	IO	IO interface
26	P2.6	IO	IO interface
27	P2.5	IO	IO interface
28	P2.4	IO	IO interface
29	P2.3	IO	IO interface
30	P2.2	IO	IO interface
31	P2.1	IO	IO interface
32	P2.0	IO	IO interface
33	P1.7	IO	IO interface
34	P1.6	IO	IO interface
35	P1.5	IO	IO interface
36	P1.4	IO	IO interface
37	P1.3	IO	IO interface
38	P1.2	IO	IO interface
39	P1.1	IO	IO interface
40	P1.0	IO	IO interface
41	UART4_TXD	O	UART4
42	UART4_RXD	I	
43	UART5_TXD	O	UART5
44	UART5_RXD	I	
45	P0.0	IO	IO interface
46	P0.1	IO	IO interface
47	CAN_TX	O	CAN interface,(External CAN chip drive is required.See 6 - (6) for circuit reference)
48	CAN_RX	I	
49	UART2_TXD	O	UART2(UART0 serial port of OS core)
50	UART2_RXD	I	

DWIN Technology Technical Document

2 Specification Parameters

2.1 Product Parameters

Model	DMG48480F040_01WTC DMG48480F040_01WTCZ01 DMG48480F040_01WTCZ02
Main Chip	T5L0
User Interface	50Pin_0.5mm FPC
FLASH	8M Bytes
UI Version	TA / DGUSII
Power Supply	USB power supply
Display Color	262K colors
Dimensions	4 inch
Resolution	480*480
Active Area	71.86mm (W)×70.18mm (H)
Viewing Angle	Wide viewing angel, typical value of 85°/85°/85°/85°(L/R/U/D)
Backlight Service Life	＞10000 hours (Time of the brightness decaying to 50% on the condition of continuous working with the maximum brightness)
Brightness	DMG48480F040_01WTC:250nit DMG48480F040_01WTCZ01:250nit DMG48480F040_01WTCZ02:50nit
Brightness Control	0~100 grade (When the brightness is adjusted to 1%~30% of the maximum brightness, flickering may occur and is not recommended to use in this range)
TP Type	CTP (Capacitive Touch Panel)
TP Structure	G+G structure
Touch Mode	Single point touch, support continuous sliding touch
Surface Hardness	6H
Light Transmittance	Over 90%
Life	Over 1,000,000 times touch

DWIN Technology Technical Document

2.2 Interface Parameters

Item	Conditions	Min	Typ	Max	Unit
Baud Rate	User Set(Configure the CFG file)	3150	115200	3225600	bps
Output Voltage(TXD)	Output 1	3.0	3.3	-	V
	Output 0	-	0	0.3	V
Input Voltage(RXD)	Input 1	-	-	3.3	V
	Input 0	0	-	0.5	V
Interface	UART2: TTL; UART4: TTL;（Only available after OS configuration） UART5: TTL;（Only available after OS configuration）				
Data Format	UART2: N81; UART4: N81/E81/O81/N82;4 modes (OS configuration) UART5: N81/E81/O81/N82;4 modes (OS configuration)				

2.3 Electrical specifications

Rated Power	<2W	
Operating Voltage	3.6~5.5V, typical value of 5V	
Operating Current	245mA	VCC=5V, max backlight
	75mA	VCC=5V, backlight off
Recommended power supply: 5V 1A DC		

2.4 Operating Environment

Operating Temperature	-10℃~60℃
Storage Temperature	-20℃~70℃
Operating Humidity	10%~90%RH, typical value of 60% RH

DWIN Technology Technical Document

3 Reliability Test

Before mass production of smart screens, a series of procedural reliability tests need to be conducted according to actual application requirements and product specification control standards to ensure product quality.

3.1 ESD Test

Test temperature: 25°C

Test process: the product was placed on the test bench to perform contact and air discharge in turn of the serial screen iron frame and display area as shown in Fig.4.1 below. During the experimental process, it was observed whether the screen is dead, black, white, splash, or reboot. According to the experiment results, the performance is in line with the criteria GB/T 17626.2 B level and above.

4.1Electrostatic discharge test

Discharge Type	Discharge Value	Result
Air discharge	±8KV	Normal operation

3.3 High and Low Temperature Test

Test temperature:-20~70℃

Test process: the product will be placed obliquely in the high and low temperature test chamber for 12h for 20 on and off cycles. Then it will be check at room temperature after power on for the appearance and function, CTP offset situation, jumping point, page random switching and failure.

Temperature	Result
High temperature（70℃）	Normal operation
Low temperature（-20℃）	Normal operation

DWIN Technology Technical Document

4 Debug

It is recommended for new users of DWIN smart LCMs to purchase official accessories. For more details, please refer to customer service center.

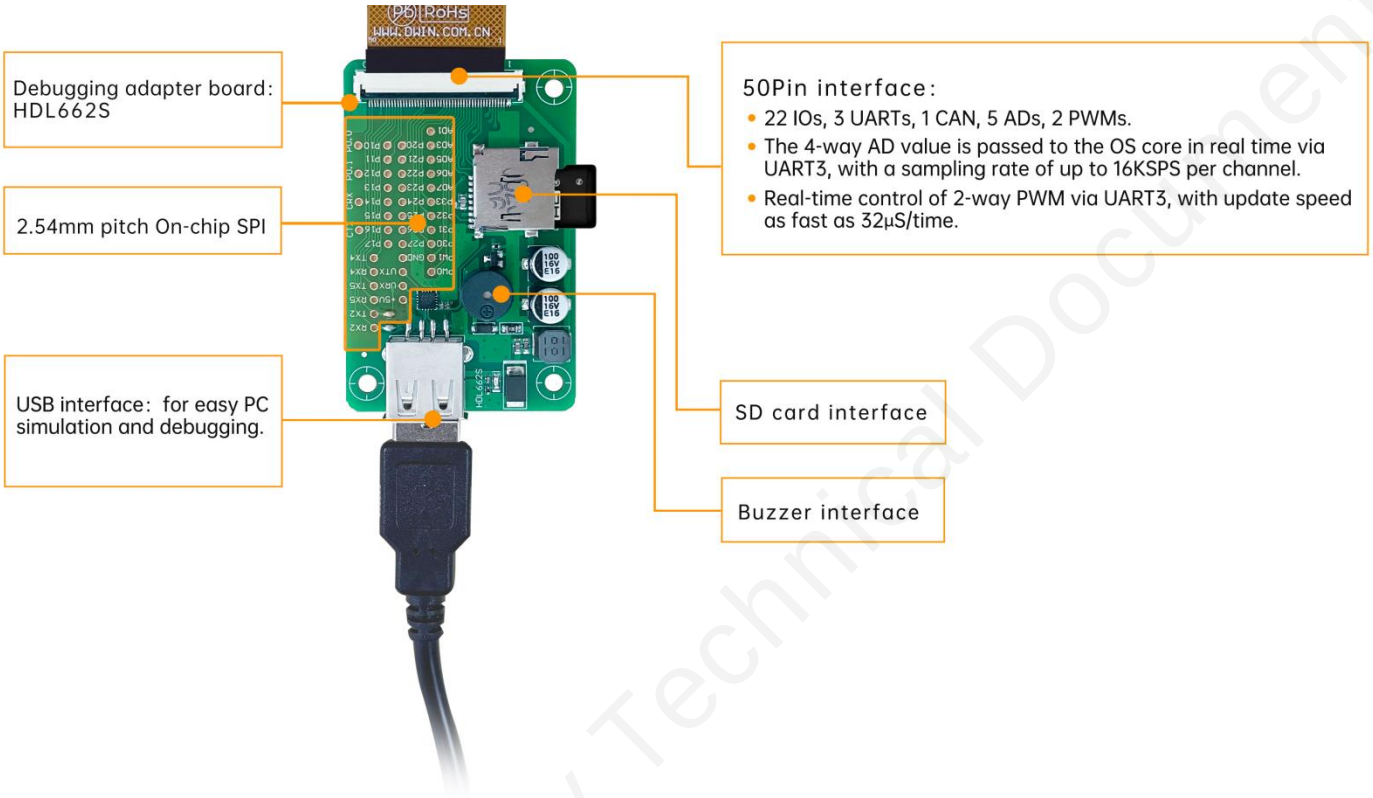

DWIN Technology Technical Document

Operation steps: open serial assistant - custom function command - set command - send.

For example:

（1）Page switching

Tx：5AA5 07 82 0084 5A01 0008

（2）Standby backlight setting

Tx：5AA5 07 82 0082 64 32 03E8

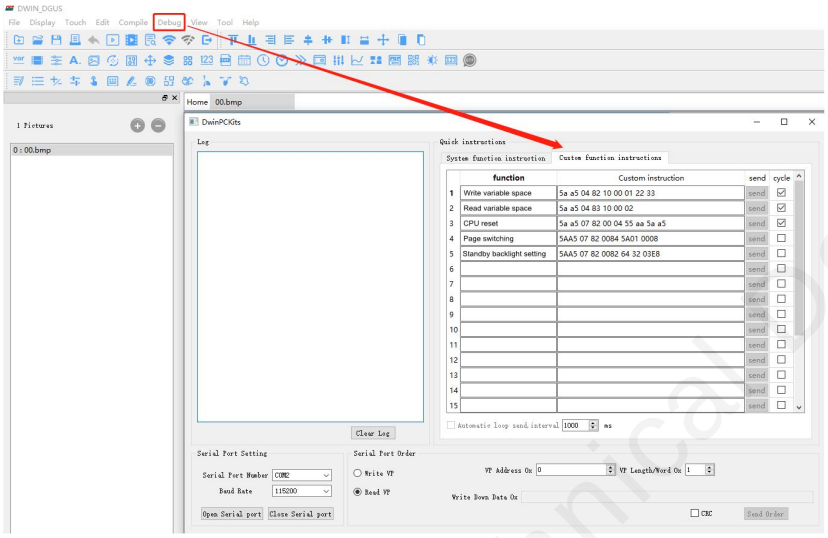

DGUS operation

DWIN Technology Technical Document

5 T5L0 ASIC

T5L0 ASIC is a low-power, cost-effective, GUI and application highly integrated single-chip dual-core ASIC designed by DWIN Technology for small-size LCD and mass produced in 2020.

(1) Mature and stable 8051 core which is the most widely used with the maximum operating frequency of T5L is up to 250MHz, 1T(single instruction cycle)high speed operation.

(2) Separate GUI CPU core running DGUS II System:

- High-speed display memory, 2.4GB/S bandwidth. 18-bit color display resolution support up to 1024*768 (TA mode), 854*480 (DGUS mode).
- 2D hardware acceleration and the UI with animation and icons as its main feature is extremely cool and smooth.
- Images and icons stored in JPEG format. Adopt Low-cost 16Mbytes SPI Flash.
- High quality ratio and sound restoration and playback.
- 128Kbytes variable storage space for exchanging data with OS CPU Core and memory.
- 2 10-bit 800KHz DC/DC controllers simplify LED backlight, analog power design and save cost and space.
- Support DGUS development and simulation on PC. Support backend remote upgrade.

(3) Separate CPU (OS CPU) core runs user 8051 code or DWIN OS system and user CPU is omitted in practical application:

- Standard 8051 core and instruction set, 64Kbytes code space, 32Kbytes on-chip RAM.
- 64-bit integer mathematical operation unit (MDU), including 64-bit MAC and 64-bit divider.
- Built-in software WDT, 3 16-bit Timers, 12 interrupt signals support up to four levels of interrupt nesting.
- Support IAP online simulation and debugging with unlimited breakpoints.
- Upgrade code online through DGUS system.

(4) 1Mbytes on-chip Flash with DWIN patent encryption technology ensure code and data security.

(5) Operating temperature ranges from -40℃ to +85℃(IC operating temperature customizable from -55℃ to 105℃).

(6) Low power consumption and strong anti-interference ability. It can work stably on double-sided PCB and passes EMC/EMI test easily.

DWIN Technology Technical Document

6 COF Screen Secondary Development

Standard 8051 core, easy to develop in C language and assembly language.

（1）22 IOs:

To use output function of IO, you need to open the output control, output strength and peripheral multiplexing power-on initialization configuration. Subsequent use of IO is consistent with the standard 8051 as follows.

```
#include "sys.h"
sbit LED1 = P1^0;
sbit KEY1 = P1^1;
//Pin initialization
void io_init()
{
	PORTDRV = 0x01;//Driving current is 8mA
	P1MDOUT |= 0x01;//Set P1.0 as output to drive LED1 light
	P1MDOUT &= 0xFD;//Set P1.1 as input to read the voltage level change of the pin
}
void main(void)
{
	u16 cnt_1ms;
	u16 key1_sta;//Store the voltage level state of the KEY1 pin
	sys_init();//System initialization
	io_init();//Pin initialization
	cnt_1ms = 0;
	key1_sta = KEY1;
	while(1)
	{
		cnt_1ms++;
		sys_delay_ms(1);// Delay sub-function, LED1 blinks every 500ms.
		if(cnt_1ms==500)
		{
			LED1 = !LED1;
			cnt_1ms = 0;
		}
		//If the voltage level of the pin has changed, it will be updated in the interface
		if(key1_sta!=KEY1)
		{
			key1_sta = KEY1;
			sys_write_vp(0x1000,(u8*)&key1_sta,1);
		}
	}
}
```

（2）3 UARTs:

High-speed serial port, supporting up to 3225600bps,as follows.

```
#include "sys.h"
#include "uart2.h"
void main(void)
{
	u16 len;
	sys_init();//System initialization
	uart2_init(115200);//Initialize serial port 2
	while(1)
	{
		if(uart2_rx_sta&UART2_PACKET_OK)//Received serial packet
		{
			len = uart2_rx_sta&UART2_PACKET_LEN;//Get the length of the serial packet without "\r\n"or '\n' terminator
			uart2_buf[len++] = 0;//Add 2 empty strings at the end
			uart2_buf[len++] = 0;
			printf("T5L_C51:%s\r\n",uart2_buf);//Return the received packet to the sender with the prefix "T5L_C51:"
			sys_write_vp(0x2000,uart2_buf,len/2+1);//At the same time display the packet to the interface
			uart2_rx_sta = 0;//Reset means that this serial packet is disposed of
		}
	}
}
```

DWIN Technology Technical Document

（3）1 CAN:

Only the special function registers of the CAN need to be configured as follows.

```
void CanInit()
{
    P0MDOUT = 0x04;     //P0.2(CAN_TX) is configured as output
    P0 = 0xFF;          //Output high voltage level
    ADR_H = 0xFF;       //Configuring DGUS variable memory addresses
    ADR_M = 0x00;
    ADR_L = 0x60;
    ADR_INC = 1;        //Configure address increments
    RAMMODE = 0x8F;     //Write mode
    while(!APP_ACK);    //Waiting for confirmation,Among answers of Hardware to 8051 occupied variable memory request,
    1=OK and 0=BUSY, which need to continue to wait.
    DATA3 = 0x1A;       //Variable memory address 0xFF:0060 assignment
    DATA2 = 0x17;
    DATA1 = 0x0F;
    DATA0 = 0;
    APP_EN = 1;
    while(APP_EN);      //Wait for the data operation to be completed, and reset after the operation is completed
    DATA3 = 0;          //Acceptance register 0xFF:0061 assignment reset
    DATA2 = 0;
    DATA1 = 0;
    DATA0 = 0;
    APP_EN = 1;
    while(APP_EN);      //Wait for the data operation to be completed, and reset after the operation is completed
    DATA3 = 0xFF;       //Acceptance Mask Register 0xFF:0062 all set to 1, and no acceptance of reception
    DATA2 = 0xFF;
    DATA1 = 0xFF;
    DATA0 = 0xFF;
    APP_EN = 1;
    while(APP_EN);      //Wait for the data operation to be completed, and reset after the operation is completed
    RAMMODE = 0;        //Terminate access to DGUS variable memory
    CAN_CR = 0xA0;      //Open CAN and configure FF0060-FF0062
    while(CAN_CR&0x20);  // Execute the configuration of FF0060-FF0062
    ECAN = 1;           //Open the CAN interrupt
    EA = 1;             //Open the total interrupt
}
```

（4）5 A/Ds: 12-bit, supports sampling to 16-bit

Only the special function registers of the A/Ds need to be configured as follows.

```
#include "sys.h"
#include "adc.h"
void main(void)
{
        u16 ad;
        float vol;
        sys_init();//System initialization
        while(1)
        {
                ad = adc_read_avg(ADC_CHANNEL0,10);//1.Read the ad value of channel 0
                vol = ad*(3300.0f/4095);//2.Calculate the voltage in mV
                sys_write_vp(0x2000,(u8*)&ad,1);// Update the ad value
                sys_write_vp(0x2001,(u8*)&vol,2);//Update the voltage value
        }
}
```

DWIN Technology Technical Document

（5）2 PWMs: 16-bit high accuracy, adjustable resolution.

Only need to configure the frequency and duty cycle of PWM as follows.

```
void Pwm_0()
{
    u8 i=0;
    u8 temp[6]={0xAA,0x20,0x42,0x56,0x78,0};//Set the pwm_0 duty cycle to 100%
    Write_Dgus(0x87,0x2042);//Configure the frequency100khz
    Write_Dgus(0x86,0x5A01);//
    for(i=0;i<5;i++) //Checksum
      temp[5]+=temp[i];
    for(i=0;i<6;i++)//Configure the duty cycle
      OneSendData3(temp[i]);
}
```

（6）CAN circuit design parameters

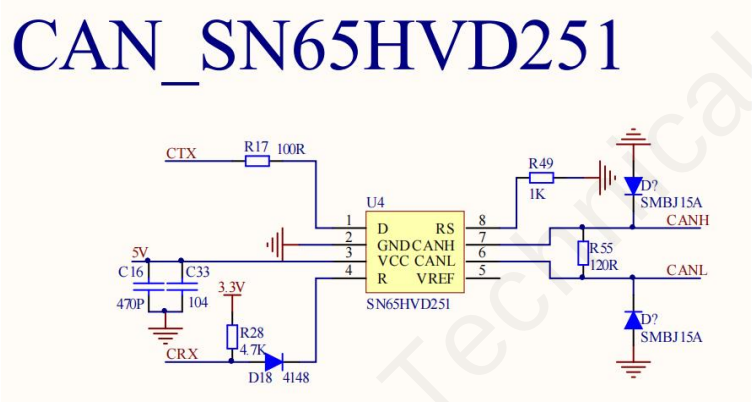

DWIN Technology Technical Document

7 Packing Capacity & Dimension

Dimension				
Dimension	DMG48480F040_01WTC: 84.0(W) ×84.0 (H) × 4.85(T) mm DMG48480F040_01WTCZ01: 84.0(W) ×84.0 (H) × 4.85(T) mm DMG48480F040_01WTCZ02: 84.0(W) ×84.0 (H) × 5.10(T) mm			
Net Weight	DMG48480F040_01WTC: 60g DMG48480F040_01WTCZ01: 61g DMG48480F040_01WTCZ02: 69g			
Packing Capacity				
Model	**Size**	**Layer**	**Quantity/Layer**	**Quantity(Pcs)**
Carton1：	220mm(L)×160mm(W)×47mm(H)	1	4	4
Carton2：	250mm(L)×200mm(W)×80mm(H)	1	8	8
Carton3：	320mm(L)×270mm(W)×80mm(H)	1	16	16
Carton4：	415mm(L)×250mm(W)×200mm(H)	2	60	102

Disclaimer: The product design is subject to alternation and improvement without prior notice.

DWIN Technology Technical Document

G+G domestic glass, black cover

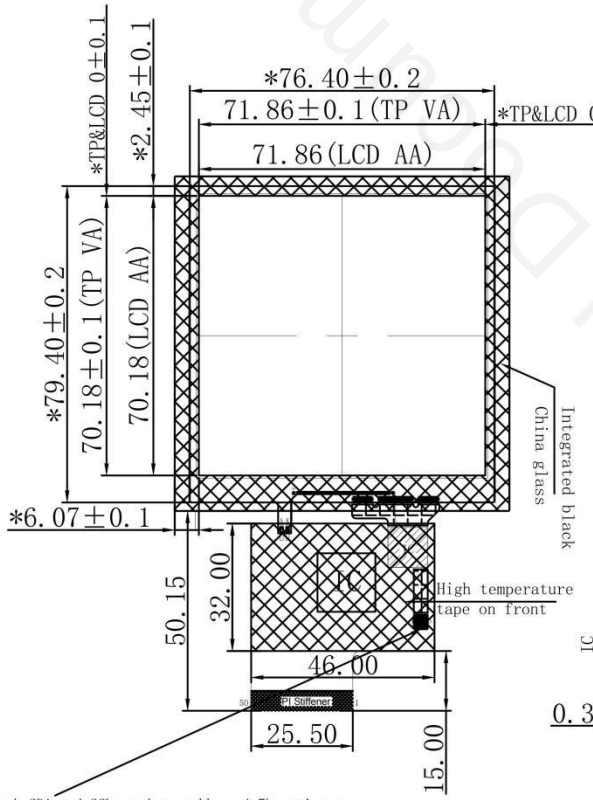

Both SDA and SCL need to pull up 4.7k resistors

PIN Definition

PIN#	Name
1	VDD-3.3V
2	RST
3	SCL
4	INT
5	SDA
6	GND

Front view

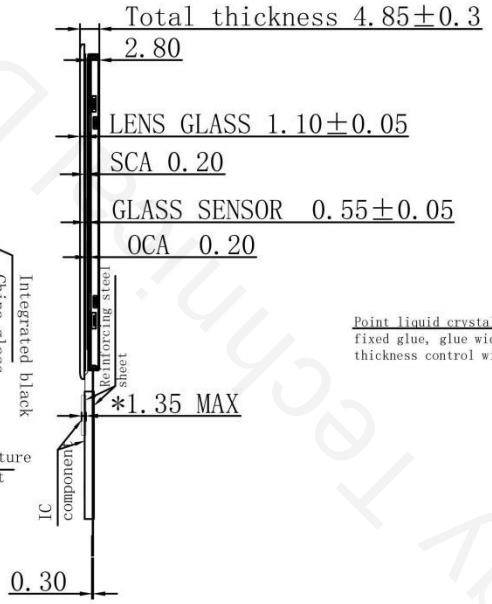

Side view

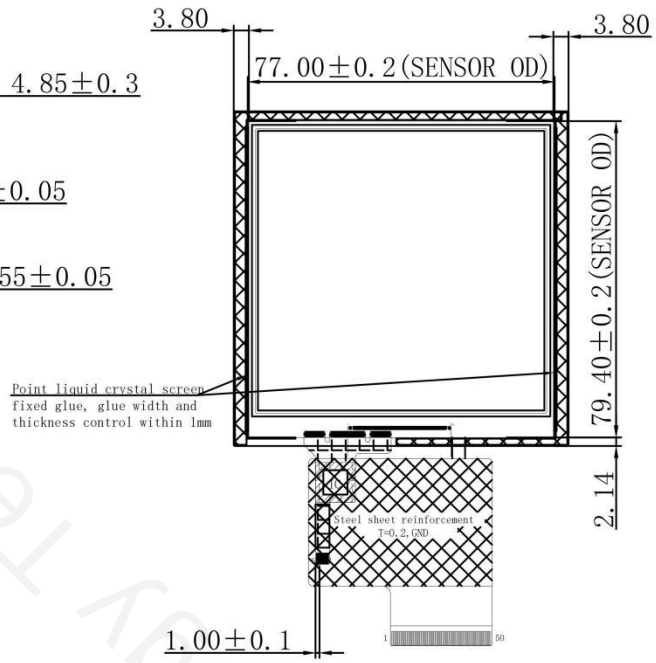

Back view

LCD PIN Definition

PIN#	Name		
1	+5V	26	P26
2	+5V	27	P25
3	GND	28	P24
4	GND	29	P23
5	GND	30	P22
6	ADC7	31	P21
7	ADC6	32	P20
8	ADC5	33	P17
9	ADC3	34	P16
10	ADC1	35	P15
11	+3.3V	36	P14
12	SPK	37	P13
13	SD_CD	38	P12
14	SD_CK	39	P11
15	SDD3	40	P10
16	SDD2	41	TX4
17	SDD1	42	RX4
18	SDD0	43	TX5
19	PWM0	44	RX5
20	PWM1	45	P00
21	P33	46	P01
22	P32	47	P02
23	P31	48	P03
24	P30	49	TX2
25	P27	50	RX2

LED CIRCUIT DIAGRAM:

4.0 IPS LCD,Normally BLACK

REVISION RECORD		VER	DATE	DWIN Technology			
1	First Edition	V1-1	20230823	FILE NAME : DMG48480F040_01WTC			TOLERANCES : ±0.2
2				CUSTOMER NAME :		SENSOR:	ANGLES : ±0.1°
3				DESIGN :		RELEASE:	SCALE : 1:1
4				DRAWN BY	Zhangruiqin	DATE 20230823	UNIT : mm
5				CHECKED BY		DATE	PRO. (3)
6				APPROVED BY		DATE	SHEET : 1/1

G+G domestic glass, white cover

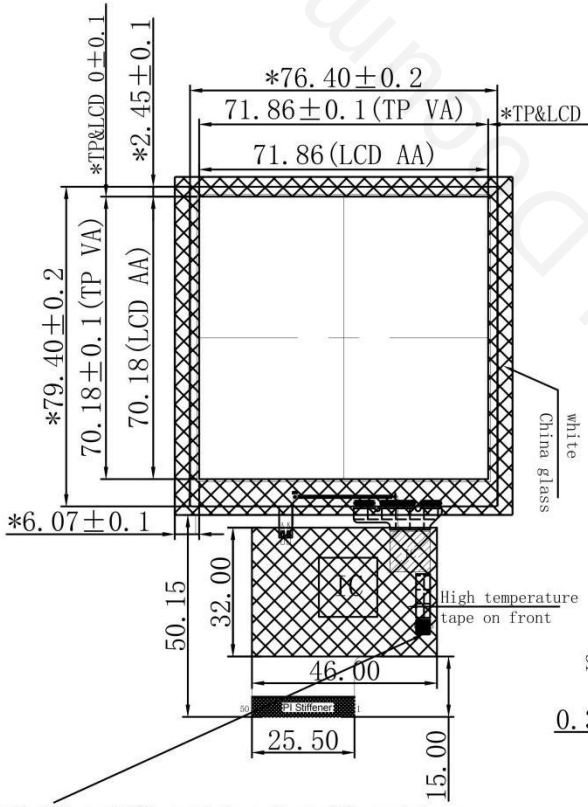

Both SDA and SCL need to pull up 4.7k resistors

PIN Definition

PIN#	Name
1	VDD-3.3V
2	RST
3	SCL
4	INT
5	SDA
6	GND

Front view

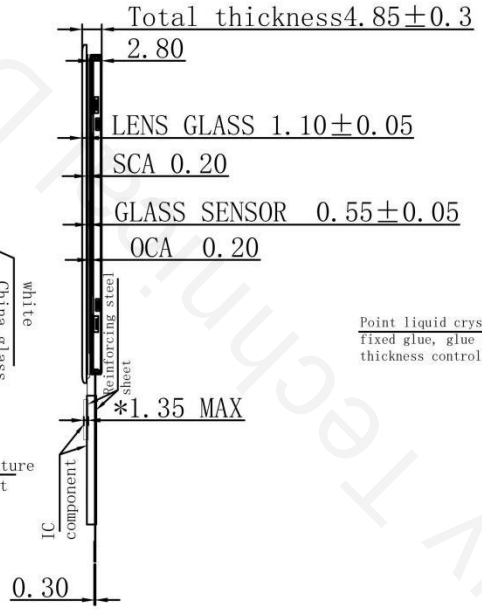

Side view

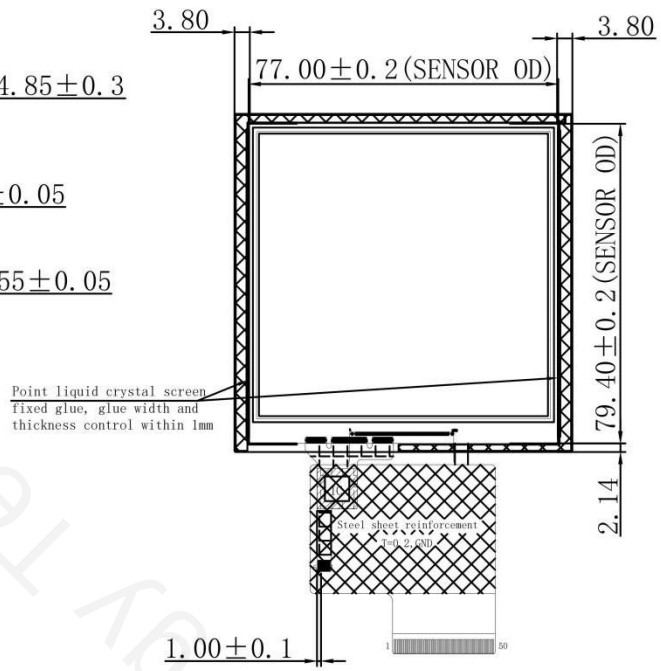

Back view

LCD PIN Definition

PIN#	Name		
1	+5V	26	P26
2	+5V	27	P25
3	GND	28	P24
4	GND	29	P23
5	GND	30	P22
6	ADC7	31	P21
7	ADC6	32	P20
8	ADC5	33	P17
9	ADC3	34	P16
10	ADC1	35	P15
11	+3.3V	36	P14
12	SPK	37	P13
13	SD_CD	38	P12
14	SD_CK	39	P11
15	SDD3	40	P10
16	SDD2	41	TX4
17	SDD1	42	RX4
18	SDD0	43	TX5
19	PWM0	44	RX5
20	PWM1	45	P00
21	P33	46	P01
22	P32	47	P02
23	P31	48	P03
24	P30	49	TX2
25	P27	50	RX2

LED CIRCUIT DIAGRAM:

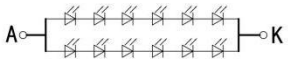

4.0 IPS LCD,Normally BLACK

REVISION RECORD		VER	DATE	DWIN Technology				
1	First Edition	V1-1	20230823	FILE NAME : DMG48480F040_01WTCZ01				TOLERANCES : ±0.2
2				CUSTOMER NAME :		SENSOR:		ANGLES : ±0.1°
3				DESIGN :		RELEASE:		SCALE : 1:1
4				DRAWN BY	Zhangruiqin	DATE	20230823	UNIT : mm
5				CHECKED BY		DATE		PRO. (3)
6				APPROVED BY		DATE		SHEET : 1/1

DWIN Technology Development

G+G domestic glass, integrated black cover, T=1.35mm

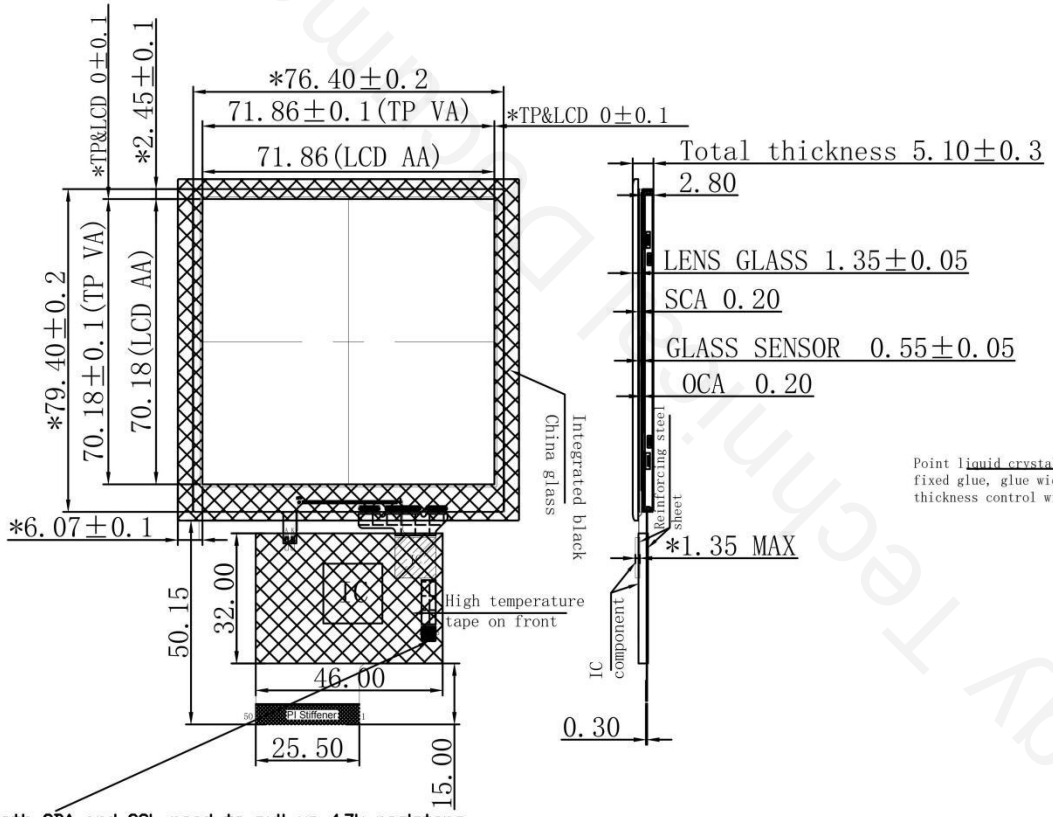

Both SDA and SCL need to pull up 4.7k resistors

PIN Definition

PIN#	Name
1	VDD-3.3V
2	RST
3	SCL
4	INT
5	SDA
6	GND

Front view Side view

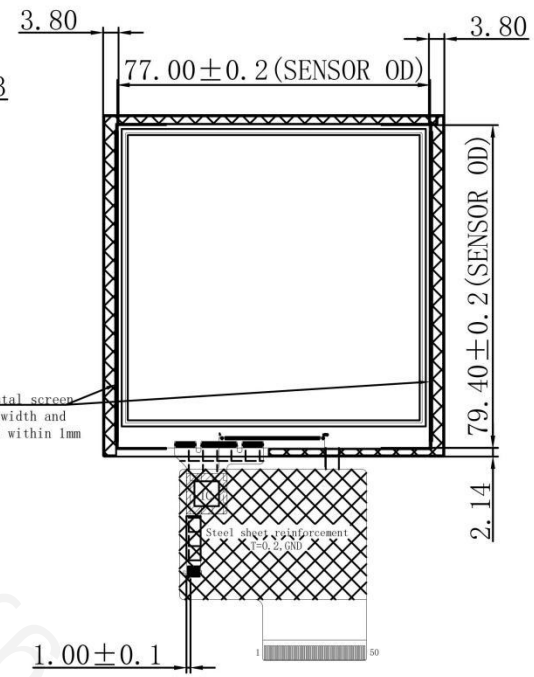

Back view

LCD PIN Definition

PIN#	Name		
1	+5V	26	P26
2	+5V	27	P25
3	GND	28	P24
4	GND	29	P23
5	GND	30	P22
6	ADC7	31	P21
7	ADC6	32	P20
8	ADC5	33	P17
9	ADC3	34	P16
10	ADC1	35	P15
11	+3.3V	36	P14
12	SPK	37	P13
13	SD_CD	38	P12
14	SD_CK	39	P11
15	SDD3	40	P10
16	SDD2	41	TX4
17	SDD1	42	RX4
18	SDD0	43	TX5
19	PWM0	44	RX5
20	PWM1	45	P00
21	P33	46	P01
22	P32	47	P02
23	P31	48	P03
24	P30	49	TX2
25	P27	50	RX2

LED CIRCUIT DIAGRAM:

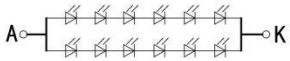

4.0 IPS LCD,Normally BLACK

REVISION RECORD		VER	DATE	DWIN Technology			
1	First Edition	V1-1	20230823	FILE NAME : DMG48480F040_01WTCZ02			TOLERANCES : ±0.2
2				CUSTOMER NAME :	SENSOR:		ANGLES : ±0.1°
3				DESIGN :	RELEASE:		SCALE : 1:1
4				DRAWN BY Zhangruiqin	DATE	20230823	UNIT : mm
5				CHECKED BY	DATE		PRO. (3)
6				APPROVED BY	DATE		SHEET : 1/1

8 Revision records

Rev	Revise Date	Content	Editor
00	2023-09-14	First Edition	Xu Ying

Please contact us if you have any questions about the use of this document or our products, or if you would like to know the latest information about our products:

- Customer service Tel: +86 400 018 9008
- Customer service email: dwinhmi@dwin.com.cn
- DWIN Developer Forum: https://forums.dwin-global.com/

Thank you all for continuous support of DWIN, and your approval is the driving force of our progress!

DWIN Technology Technical Document