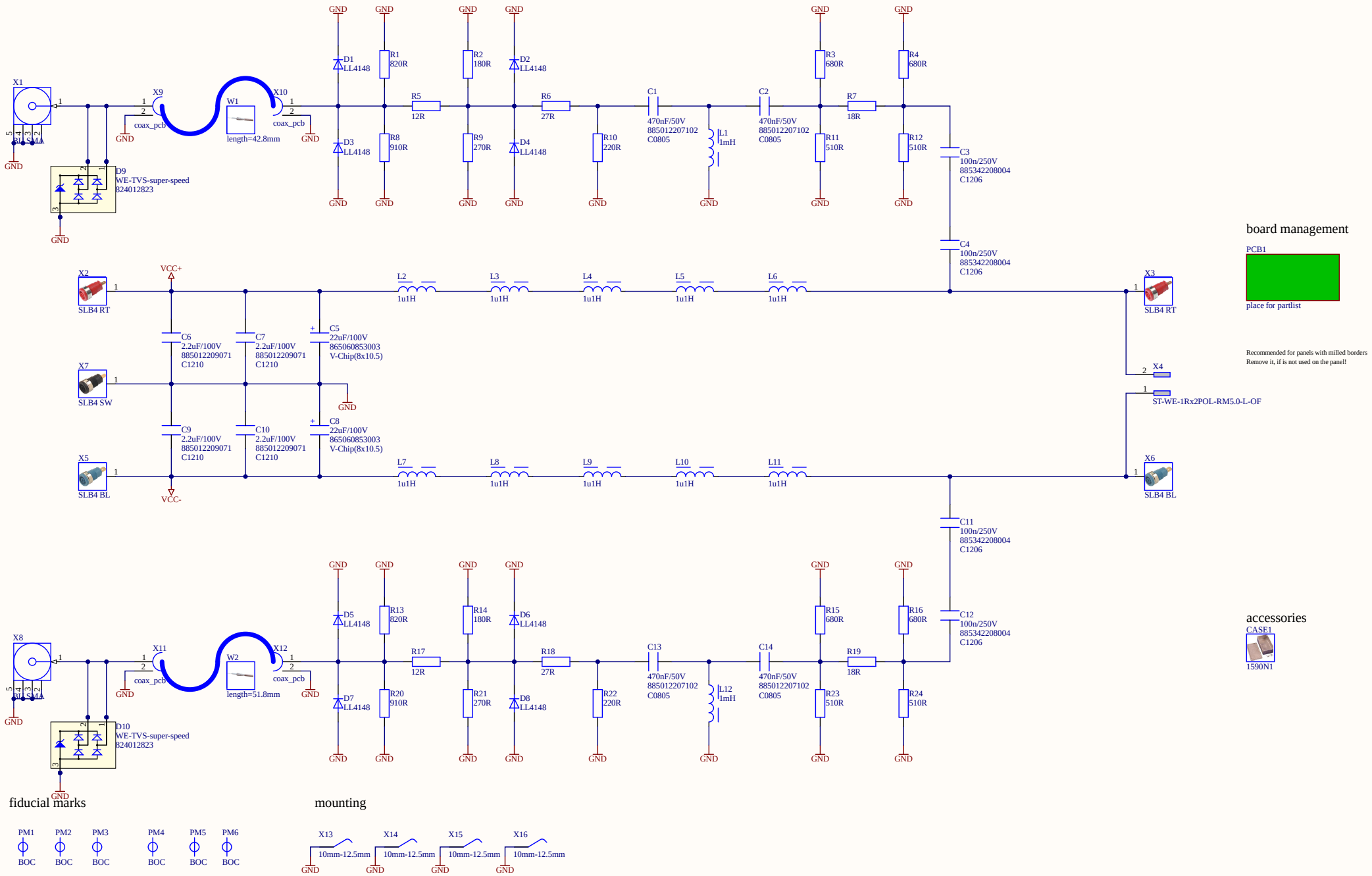
management
X1
SL SMA
X9
coax_pcb
W1
length=42.8mm
X10
coax_pcb
GND
D9
WE-TVS-super-speed
824012823
D1
LL4148
D2
LL4148
D3
LL4148
D4
LL4148
R1
820R
R2
180R
R3
680R
R4
680R
R5
12R
R6
27R
R7
18R
R8
910R
R9
270R
R10
220R
R11
510R
R12
510R
C1
470nF/50V
885012207102
C0805
C2
470nF/50V
885012207102
C0805
L1
1mH
C3
100n/250V
885342208004
C1206
C4
100n/250V
885342208004
C1206
board management
PCB1
place for partlist
Recommended for panels with milled borders
Remove it, if is not used on the panel!
X2
SLB4 RT
X7
SLB4 SW
X5
SLB4 BL
VCC+
VCC-
C6
2.2uF/100V
885012209071
C1210
C7
2.2uF/100V
885012209071
C1210
C5
22uF/100V
865060853003
V-Chip(8x10.5)
C9
2.2uF/100V
885012209071
C1210
C10
2.2uF/100V
885012209071
C1210
C8
22uF/100V
865060853003
V-Chip(8x10.5)
L2
1u1H
L3
1u1H
L4
1u1H
L5
1u1H
L6
1u1H
L7
1u1H
L8
1u1H
L9
1u1H
L10
1u1H
L11
1u1H
X3
SLB4 RT
X4
ST-WE-1Rx2POL-RM5.0-L-OF
X6
SLB4 BL
C11
100n/250V
885342208004
C1206
C12
100n/250V
885342208004
C1206
accessories
CASE1
1590N1
X8
SL SMA
X11
coax_pcb
W2
length=51.8mm
X12
coax_pcb
D10
WE-TVS-super-speed
824012823
D5
LL4148
D6
LL4148
D7
LL4148
D8
LL4148
R13
820R
R14
180R
R15
680R
R16
680R
R17
12R
R18
27R
R19
18R
R20
910R
R21
270R
R22
220R
R23
510R
R24
510R
C13
470nF/50V
885012207102
C0805
C14
470nF/50V
885012207102
C0805
L12
1mH
fiducial marks
PM1
PM2
PM3
PM4
PM5
PM6
BOC
mounting
X13
X14
X15
X16
10mm-12.5mm

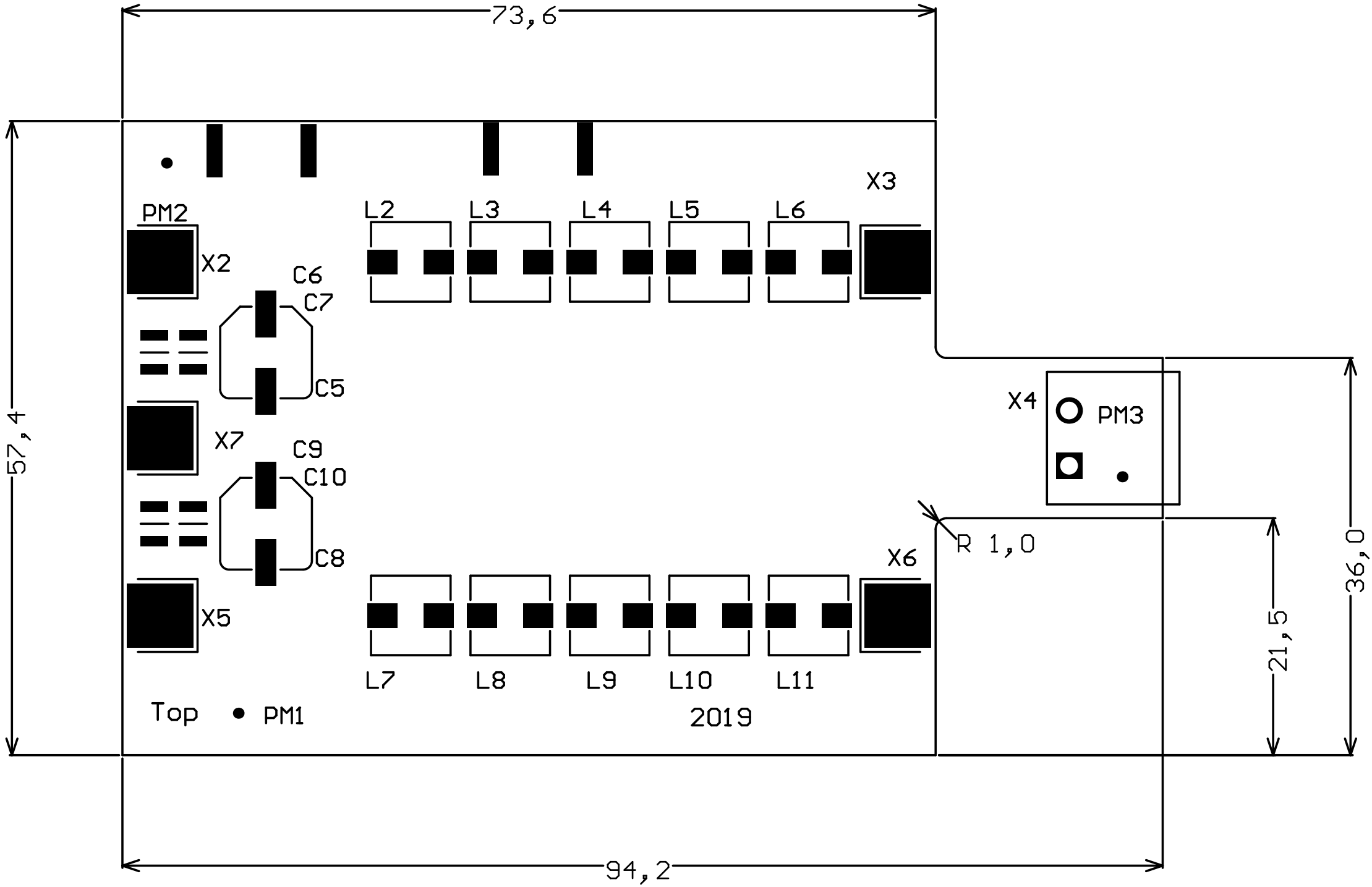
73,6
57,4
94,2
36,0
21,5
R 1,0
PM2
X2
C6
C7
C5
X7
C9
C10
C8
X5
L2
L3
L4
L5
L6
X3
X4
PM3
X6
L7
L8
L9
L10
L11
Top
PM1
2019

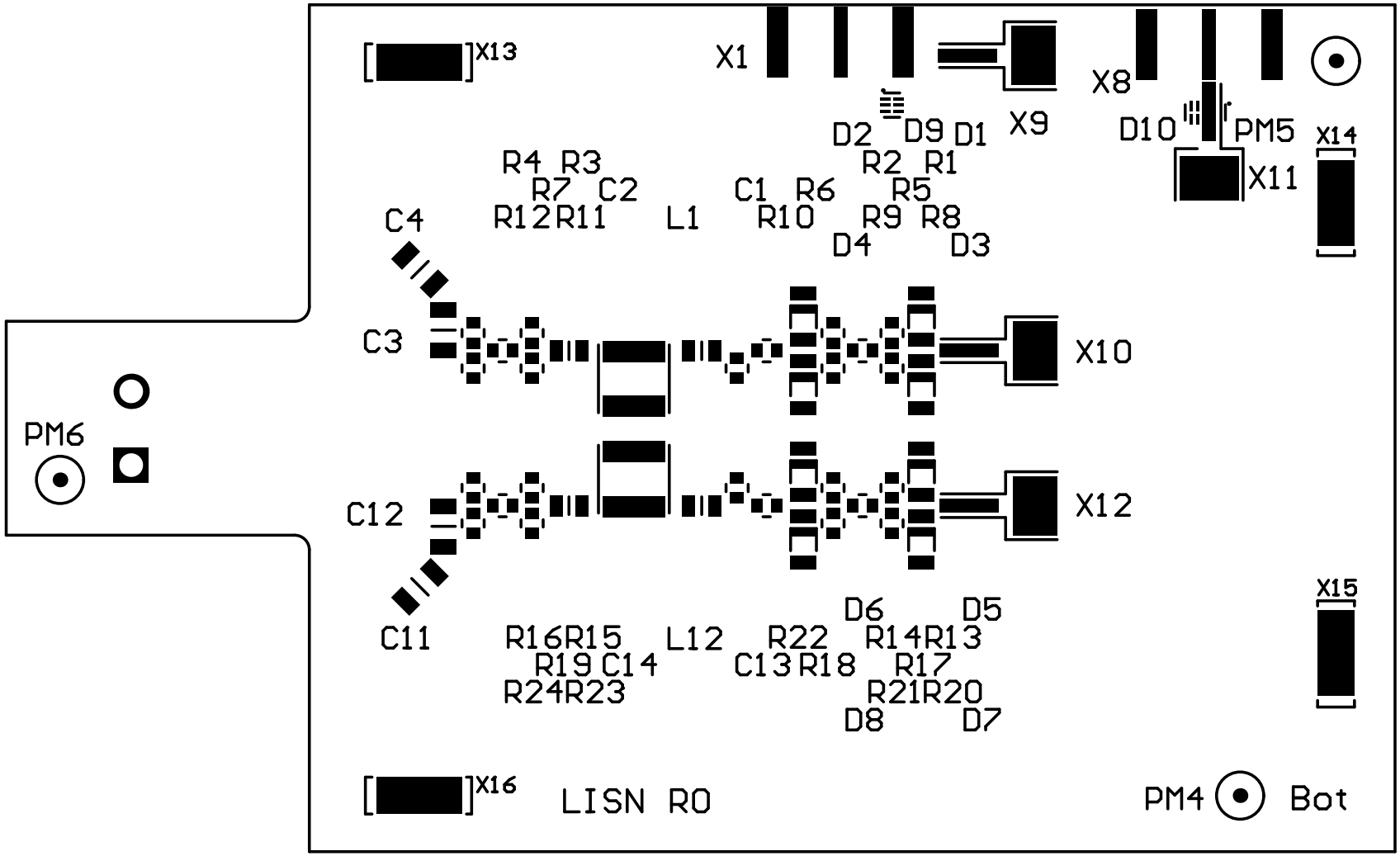
X13
X1
X8
D2
D9
D1
X9
D10
PM5
X14
X11
R4
R3
R7
C2
C1
R6
R2
R1
R5
R12
R11
L1
R10
R9
R8
C4
D4
D3
C3
X10
PM6
C12
X12
X15
D6
D5
C11
R16
R15
L12
R22
R14
R13
R19
C14
C13
R18
R17
R24
R23
R21
R20
D8
D7
X16
LISN R0
PM4
Bot

Art.-Code	Comment	Description	Designator	Case	Manufacturer	Part-No.	Quantity
885012207102	470nF/50V	Ceramic SMT X7R 470nF/50V 0805	C1, C2, C13, C14	C0805	WE	X7R0805474K050DFCT10000	4
885342208004	100n/250V	Ceramic SMT X7R 100nF/250V 1206	C3, C4, C11, C12	C1206	WE	X7R1206104K250DFCT10000	4
865060853003	22uF/100V	Electrolytic SMT 22uF/100V ASLL (8x10.5)	C5, C8	V-Chip(8x10.5)	WE	ASEE105220M100DVCTEE000	2
885012209071	2.2uF/100V	Ceramic SMT X7R 2.2uF/100V 1210	C6, C7, C9, C10	C1210	WE	X7R1210225K100DFCT10000	4
1590N1	1590N1	Diacast Aluminum Alloy 121.2x65.5x39.8	CASE1		Hammond	1590N1	1
512-LL4148	LL4148	Diode, SMT, universal, 100V, 100mA, MM	D1, D2, D3, D4, D5, D6, D7, D8	Minimelf	ON Semi	FDLL4148	8
824012823	WE-TVS-super-speed	TVS, diode, array, 2 channel ESD protection, 3.3V, DFN1012-6	D9, D10	DFN1012	WE	824012823	2
74404054102	1mH	Inductor SMT WE-LQS 5040 1mH/200mA	L1, L12	SMD 5040	WE	74404054102	2
744314110	1u1H	Inductor SMT WE-HCI 7050 1.1uH/15000mA	L2, L3, L4, L5, L6, L7, L8, L9, L10, L11	SMD 7050	WE	744314110	10
LISN R0	place for partlist	only for partlist	PCB1			LISN R0	1
NA	BOC	fiducial mark 1mm (inside) 4mm (outside)	PM1, PM2, PM3, PM4, PM5, PM6				6
ERJ-3EKF8200V	820R	Resistor 820R 1% 0603 E24	R1, R13	C0603	Panasonic	ERJ-3EKF8200V	2
ERJ-3EKF1800V	180R	Resistor 180R 1% 0603 E24	R2, R14	C0603	Panasonic	ERJ-3EKF1800V	2
ERJ-3EKF6800V	680R	Resistor 680R 1% 0603 E24	R3, R4, R15, R16	C0603	Panasonic	ERJ-3EKF6800V	4
ERJ-3EKF12R0V	12R	Resistor 12R 1% 0603 E24	R5, R17	C0603	Panasonic	ERJ-3EKF12R0V	2

Art.-Code	Comment	Description	Designator	Case	Manufacturer	Part-No.	Quantity
ERJ-3EKF27R0V	27R	Resistor 27R 1% 0603 E24	R6, R18	C0603	Panasonic	ERJ-3EKF27R0V	2
ERJ-3EKF18R0V	18R	Resistor 18R 1% 0603 E24	R7, R19	C0603	Panasonic	ERJ-3EKF18R0V	2
ERJ-3EKF9100V	910R	Resistor 910R 1% 0603 E24	R8, R20	C0603	Panasonic	ERJ-3EKF9100V	2
ERJ-3EKF2700V	270R	Resistor 270R 1% 0603 E24	R9, R21	C0603	Panasonic	ERJ-3EKF2700V	2
ERJ-3EKF2200V	220R	Resistor 220R 1% 0603 E24	R10, R22	C0603	Panasonic	ERJ-3EKF2200V	2
ERJ-3EKF5100V	510R	Resistor 510R 1% 0603 E24	R11, R12, R23, R24	C0603	Panasonic	ERJ-3EKF5100V	4
RG 178 B/U	length=42.8mm, length=51.8mm	Coaxial cable RG178 1.8mm	W1, W2		Sytronic	RG 178 B/U	2
60312242114510	BU.SMA	female SMA 9.52 5 pins 180° SMT end launch rear mount bulkhead for 1.6mm PCB	X1, X8		WE	60312242114510	2
SEB 2610F RT	SLB4 RT	Safety_4MM_4.8x0.8_RT	X2, X3		Reichelt	23.3000-22	2
691313710002	ST-WE-1Rx2POL-RM5.0-L-OF	WR-TBL Terminal block - serie 3137 - 5.00mm	X4		WE	691313710002	1
SEB 2610F BL	SLB4 BL	Safety_4MM_4.8x0.8_BL	X5, X6		Reichelt	23.3000-23	2
SEB 2610F SW	SLB4 SW	Safety_4MM_4.8x0.8_SW	X7		Reichelt	23.3000-21	1
331161702513	10mm-12.5mm	WE-SECF SMD EMI Contact Finger, 7x2.5x13mm	X13, X14, X15, X16	7x2.5x13	WE	331161702513	4

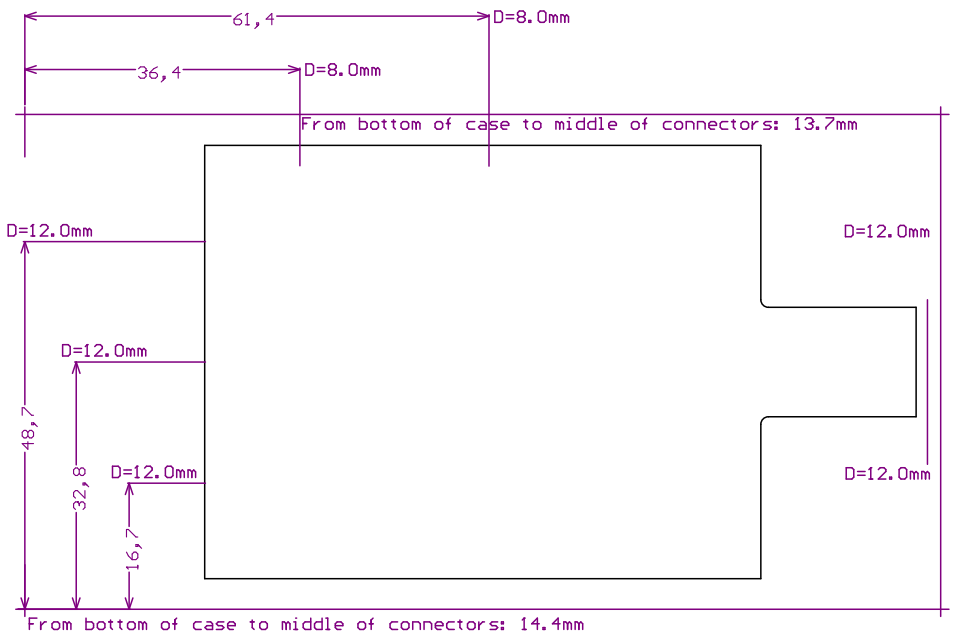
61,4
D=8.0mm
36,4
D=8.0mm
From bottom of case to middle of connectors: 13.7mm
D=12.0mm
D=12.0mm
D=12.0mm
D=12.0mm
D=12.0mm
48,7
32,8
16,7
From bottom of case to middle of connectors: 14.4mm

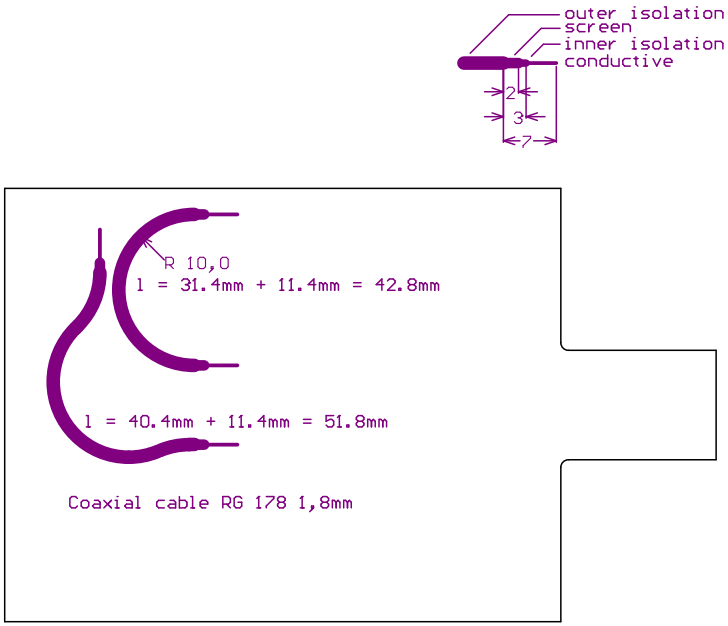
outer isolation
screen
inner isolation
conductive
2
3
7
R 10,0
l = 31.4mm + 11.4mm = 42.8mm
l = 40.4mm + 11.4mm = 51.8mm
Coaxial cable RG 178 1,8mm

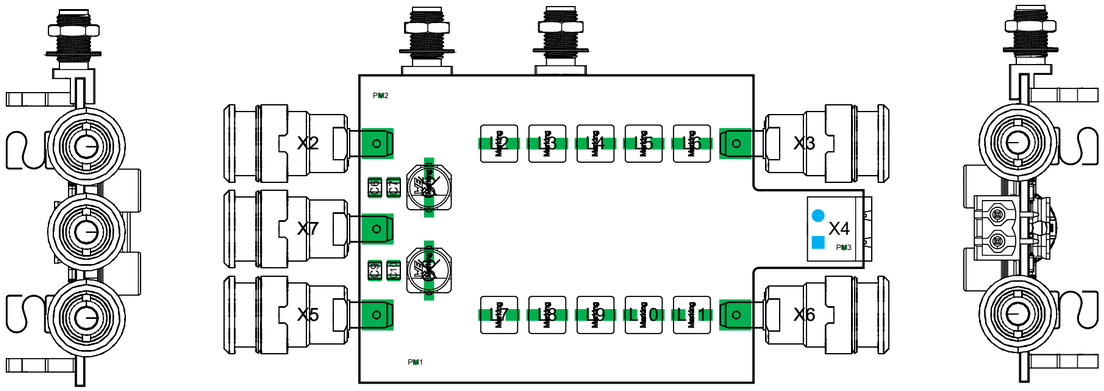

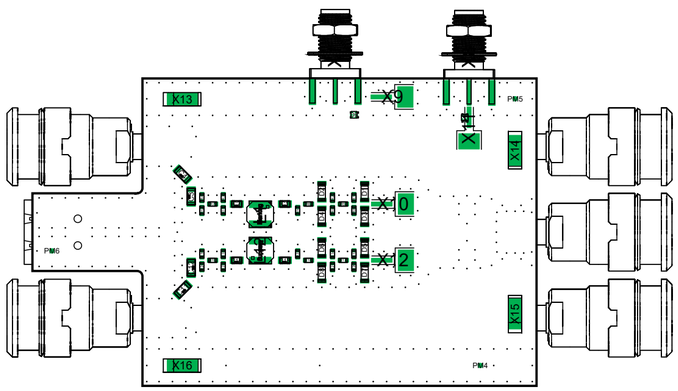

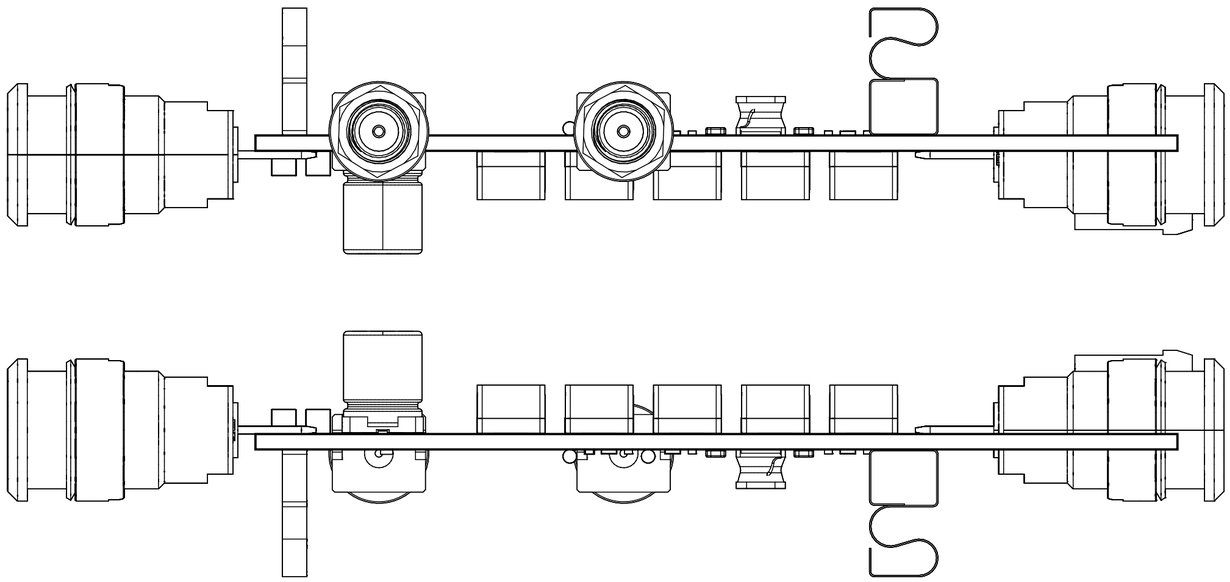

1 Text element with square border.

2. Text element with no border

3 Text element with circle border

THE INFORMATION CONTAINED IN THIS DRAWING IS THE SOLE PROPERTY OF
. ANY REPRODUCTION IN PART OR AS A WHOLE WITHOUT THE WRITTEN PERMISSION OF IS

PROPRIETARY AND CONFIDENTIAL

NEXT ASSY	USED ON
APPLICATION	

UNLESS OTHERWISE SPECIFIED:
DIMENSIONS ARE IN INCHES
TOLERANCES:
FRACTIONAL±
ANGULAR: MACH± BEND ±
TWO PLACE DECIMAL ±
THREE PLACE DECIMAL ±

INTERPRET GEOMETRIC TOLERANCING PER:

MATERIAL

FINISH

DO NOT SCALE DRAWING

	NAME	DATE
DRAWN		25.11.2020
CHECKED		
ENG APPR.		
MFG APPR.		
Q.A.		

COMMENTS:

TITLE

SIZE | DWG. NO.

SCALE: 1:1 | WEIGHT: | SHEET 1 OF 1

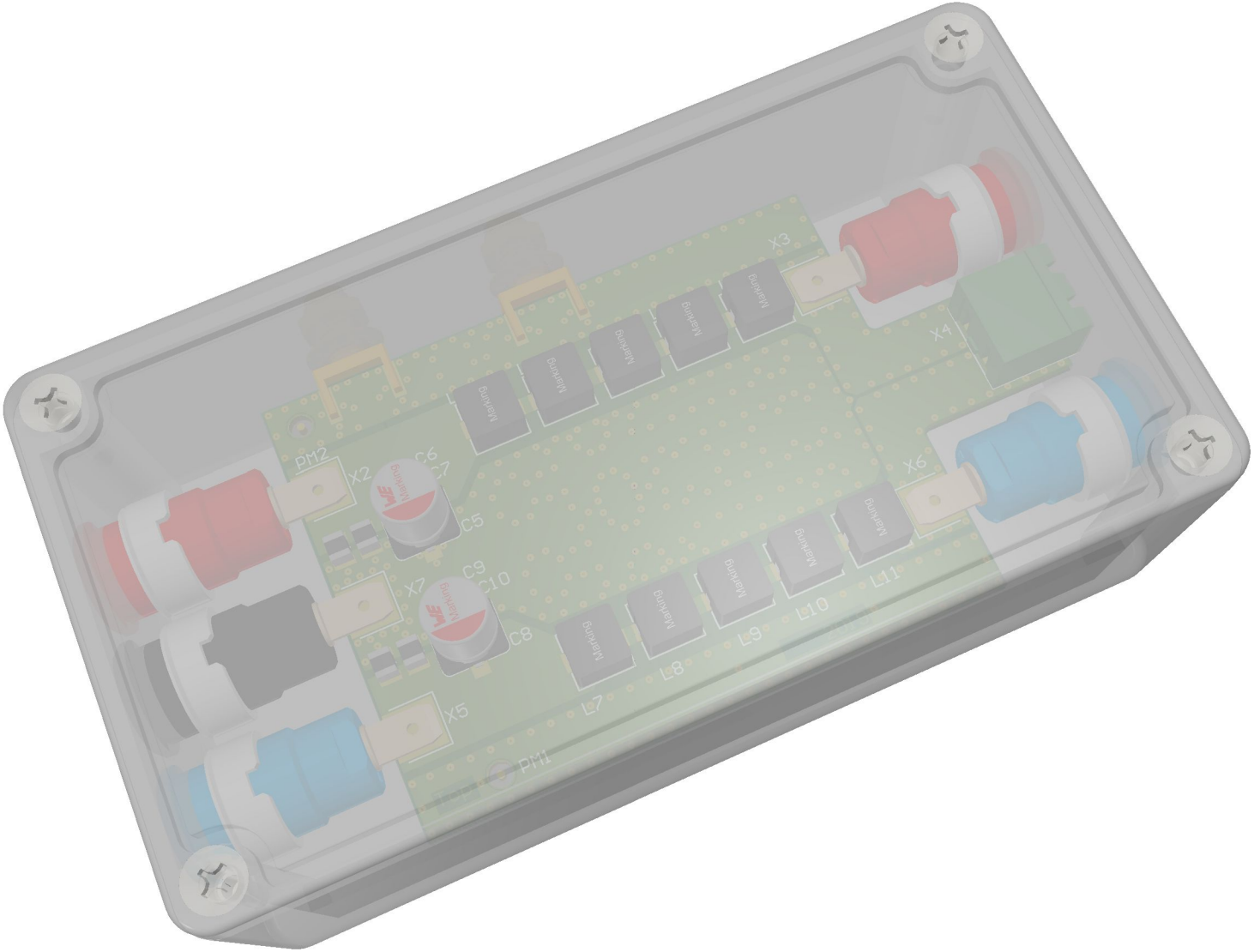

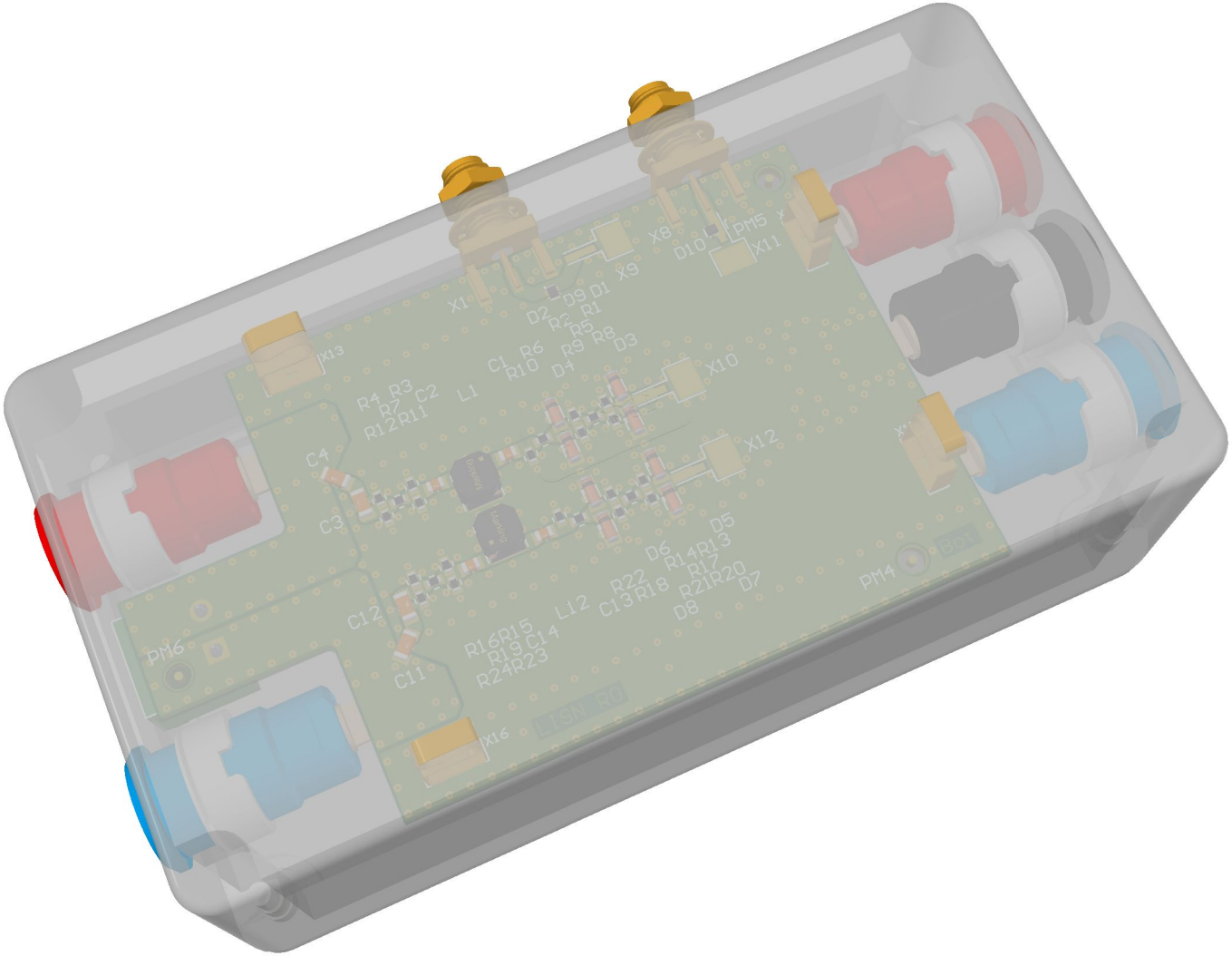
X1
X8
X9
D10
PM5
X11
D9
D1
D2
R1
R2
R5
R8
D3
C1
R6
R9
R10
D4
X10
X13
R4
R3
R7
C2
L1
R12
R11
X12
C4
C3
D5
D6
R14
R13
R17
R22
R21
R20
D7
C13
R18
D8
PM14
C12
L12
R16
R15
R19
C14
R24
R23
C11
PM16
X16