# OVERVIEW

## Features

- Full-bridge switching output
- Integrated low-RDS(on) MOSFETs:
- NMOS: 0.13 Ω
- PMOS: 0.25 Ω
- Output current capability: 0.8 A (typical)
- Input voltage range: 3 V – 6 V
- Wide temperature range: –40 °C to +125 °C
- SOT23-6 / ESOP-8 package options
- Integrated overcurrent and overtemperature protection
- High switching frequency operation (~340 kHz)

## Overview

The VPS8702 is a compact, high-efficiency push-pull transformer driver designed for low-power isolated power supplies in embedded systems. Operating from a 3–6 V input, it delivers up to 0.5 A through a full-bridge topology, driving small SMT transformers at ~340 kHz. With built-in MOSFETs, thermal protection, and minimal external components, it's ideal for powering isolated interfaces like CAN, RS-485, SPI, and USB. The EN pin simplifies control, and its wide temperature range and reinforced isolation make it a solid choice for industrial and marine applications

## Applications

Isolated interface power for:

- CAN
- RS-485
- RS-232
- SPI
- $I^2C$

## Ordering Information

| Part Number | Package | Dimensions | Reel Quantity |
|---|---|---|---|
| VPS8702 | SOT23-6 | 3.0mm × 2. mm | 3000 |
| VPS8702S | ESOP-8 | 5. mm × 6. mm | 2500 |

## Typical Application Circuit

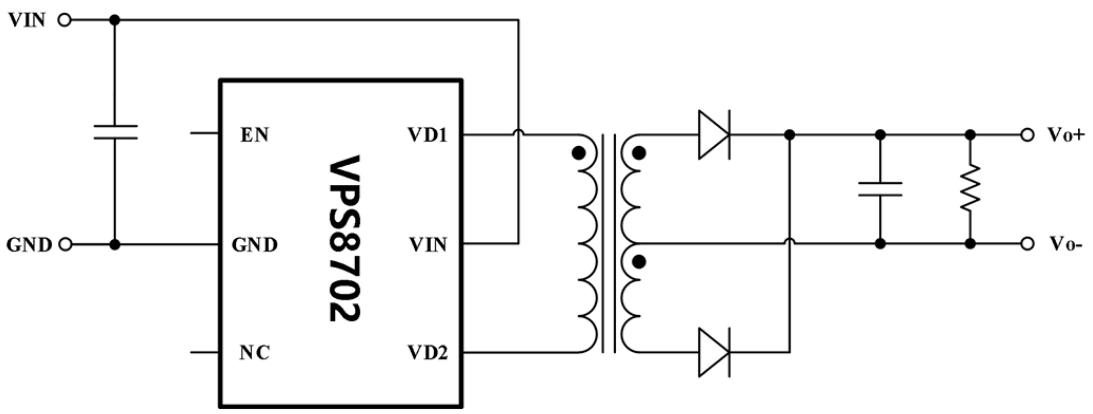


Copyright © Feb. 2021, Very Power Incorporated

## Pin Configurations

### *VPS8702 (SOT23-6)*

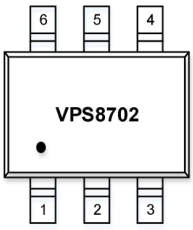


| Pin | Name | Type | Description |
|---|---|---|---|
| 1 | EN | I | Enable pin: Pull low to disable, leave open or pull high to enable |
| 2 | GND | P | Ground |
| 3 | NC | – | No connection |
| 4 | VD2 | O | Transformer drive output 2 |
| 5 | VIN | I | Power input; recommend 1 μF bypass capacitor between VIN and GND |
| 6 | VD1 | O | Transformer drive output 1 |

### *VPS8702S (ESOP-8)*

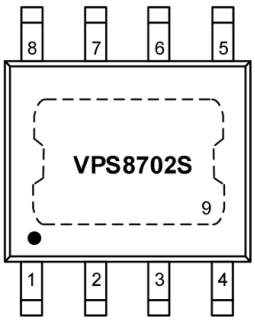


| Pin | Name | Type | Description |
|---|---|---|---|
| 1 | NC | – | No connection |
| 2 | NC | – | No connection |
| 3 | VIN | I | Power input; recommend 1 μF bypass capacitor between VIN and GND |
| 4 | EN | I | Enable pin: Pull low to disable, leave open or pull high to enable |
| 5 | VD2 | O | Transformer drive output 2 |
| 6 | NC | – | No connection |
| 7 | GND | P | Ground |
| 8 | VD1 | O | Transformer drive output 1 |

*Copyright © Feb. 2021, Very Power Incorporated*

# LIMITING VALUES

## Absolute Maximum Ratings

| Parameter | Symbol | Rating | Unit |
|---|---|---|---|
| Supply Voltage | VIN | –0.3 to 10 | V |
| Output Pins | VD1, VD2 | –0.3 to (VIN + 0.3) | V |
| Enable Pin | EN | –0.3 to 6.6 | V |
| Maximum Junction Temp. | $T_J$ | 150 | °C |
| Storage Temp. | $T_{stg}$ | –55 to 150 | °C |

*Note: Exceeding these ratings may result in permanent damage to the device.*

## ESD Protection Ratings

| Test Model | Conditions | Rating |
|---|---|---|
| HBM (Human Body Model) | per JEDEC JS-001-2017 | ±4000 V |
| CDM (Charged Device Model) | per JEDEC JS-002-2014 | ±1000 V |

## Recommended Operating Conditions

| Parameter | Symbol | Min | Typ | Max | Unit |
|---|---|---|---|---|---|
| Supply Voltage | VIN | 3.0 | — | 6.0 | V |
| Output Current | IO | — | 0.5 | — | A |
| Ambient Temperature | TA | –40 | — | 125 | °C |

*Copyright © Feb. 2021, Very Power Incorporated*

# CHARACTERISTICS

## Enable Input Logic Thresholds (EN Pin, VIN = 5 V, T = 25 °C)

| **Parameter** | **Symbol** | **Min** | **Typ** | **Max** | **Unit** |
|---|---|---|---|---|---|
| Enable Voltage Threshold | VEN_H | 2.6 | 2.8 | 3.0 | V |
| Hysteresis | VEN_HYS | — | 0.3 | — | V |
| EN Pin Input Current (EN = 0) | IEN | — | 2.5 | 5 | μA |

## Supply Current and Thresholds

| Parameter | Symbol | Min | Typ | Max | Unit |
|---|---|---|---|---|---|
| Quiescent Current (no load) | IQ | — | 0.6 | 1.4 | mA |
| Overvoltage Shutdown Threshold | VOV | 7.3 | 7.8 | 8.2 | V |
| Undervoltage Lockout Threshold | VUV | — | 0.5 | — | V |

## Output Parameters (VD1 / VD2)

| Parameter | Symbol | Conditions | Typ | Unit |
|---|---|---|---|---|
| NMOS RDS(on) | RDS(on) NMOS | T = 25 °C, IDS = 0.2 A | 0.13 | Ω |
| PMOS RDS(on) | RDS(on) PMOS | T = 25 °C, IDS = 0.2 A | 0.25 | Ω |
| Switching Frequency | fSW | — | 340 | kHz |
| Voltage Slew Rate | dv/dt | — | 126 | V/μs |
| Dead Time (between switching) | tBBM | — | 105 | ns |
| Output Peak Current | IPK | — | 800 | mA |

## Thermal Shutdown

| Parameter | Symbol | Typ | Unit |
|---|---|---|---|
| Thermal Shutdown Temp | TSD | 158 | °C |
| Thermal Shutdown Hysteresis | THYS | 26 | °C |

*Copyright © Feb. 2021, Very Power Incorporated*

# PERFORMANCE

## Output Voltage vs Load Current

Figure 1 illustrates the output voltage (VO) versus load current (IO) for input voltages of 4.5 V, 5.0 V, and 5.5 V. As the load increases, the output voltage drops slightly, with better voltage regulation observed at higher VIN levels. Even at full 200 mA load, the output remains within acceptable tolerance around 5 V, indicating strong load regulation across typical input voltages.

## Efficiency vs Load Current

Figure 2 shows the conversion efficiency of the VPS8702 when delivering 5 V at 1 W using the VPT87BB-01B transformer. The device achieves peak efficiency between 78% and 82% around 150 mA load current. This demonstrates that the driver operates optimally near mid-load, making it well suited for applications with moderate and stable power demands.

## Switching Frequency vs Temperature

Figure 3 plots the switching frequency across the full temperature range from –55 °C to +125 °C. The frequency remains relatively flat, fluctuating only slightly between approximately 315 kHz and 360 kHz. This thermal stability ensures predictable timing characteristics in systems where switching frequency affects noise or EMI compliance.

## Switching Frequency vs VIN

Figure 4 shows the effect of input voltage on the driver's switching frequency. As VIN increases from 4.0 V to 6.0 V, the switching frequency rises correspondingly, peaking at around 375 kHz. This behavior is typical of fixed-on-time control topologies and should be accounted for in EMI-sensitive designs.

## Input Current vs Temperature

Figure 5 presents the quiescent input current versus ambient temperature. Input current remains consistent across a wide temperature span, ranging from ~900 µA to just above 1 mA at high temperatures. This low and stable idle current supports efficient standby operation, especially in battery-powered systems.

## Input Current vs Load Current

Figure 6 demonstrates the input current drawn when the device is disabled, as a function of temperature. With EN held low, current draw remains below 5 µA, increasing slightly with temperature. This low shutdown current makes the VPS8702 ideal for energy-conscious designs that require galvanic isolation but spend much of their time in sleep mode.

## Output Current vs Temperature

Figure 7 presents the EN (enable) threshold voltage across temperature. The rising threshold voltage required to enable the device decreases gradually with increasing temperature, from approximately 1.6 V at –55 °C to about 1.15 V at +125 °C. This behavior should be considered when designing with temperature-sensitive logic thresholds.

*Copyright © Feb. 2021, Very Power Incorporated*

## Quiescent Current vs Temperature

Figure 8 shows the EN falling threshold (disable voltage) versus temperature. It exhibits a stable but slightly declining curve, ranging from ~0.85 V at low temperatures to ~0.65 V at high temperatures. The consistent hysteresis between Figures 7 and 8 helps prevent erratic behavior near threshold levels.

## Input Current vs VIN

Figure 9 illustrates the output current limit (ILIM) versus input voltage. As VIN increases from 4 V to 6 V, the current limit rises steadily from approximately 750 mA to above 900 mA. This helps ensure fault tolerance under higher input supply conditions while maintaining protection for downstream circuits.

## Input Current vs Temperature

Figure 10 shows the output current limit (ILIM) as a function of ambient temperature. ILIM decreases slightly as temperature rises, maintaining a range from ~800 mA at –55 °C down to ~760 mA at +125 °C. This thermally adaptive behavior improves system reliability by reducing stress on components under high-temperature operation.

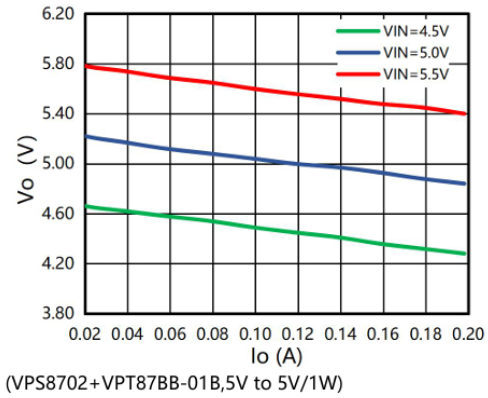


*Figure 1: Output Voltage vs Load Current*

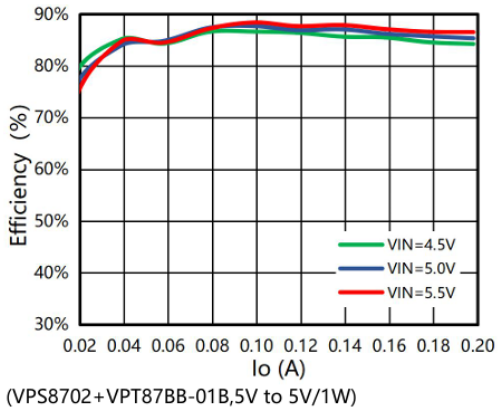


*Figure 2: Efficiency vs Load Current*

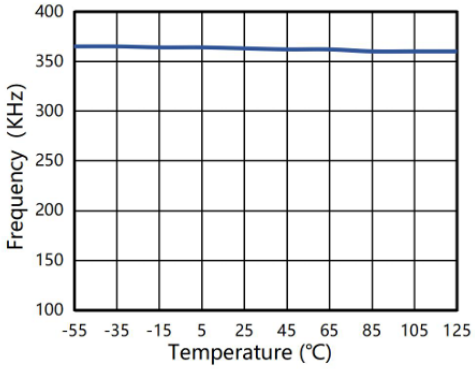


Figure 3: *Switching Frequency vs Temperature*

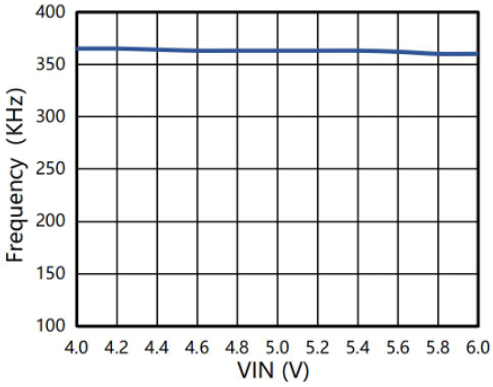


*Figure 4: Switching Frequency vs VIN*

*Copyright © Feb. 2021, Very Power Incorporated*

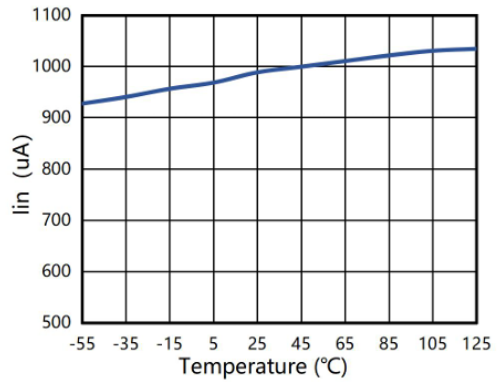


*Figure 5: Switching Frequency vs VIN*

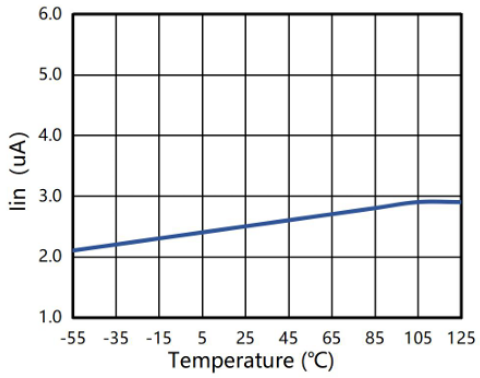


*Figure 6: Input Current vs Load Current*

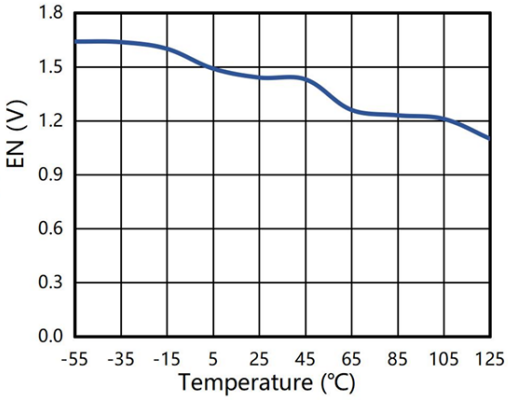


*Figure 7: Output Current vs Temperature*

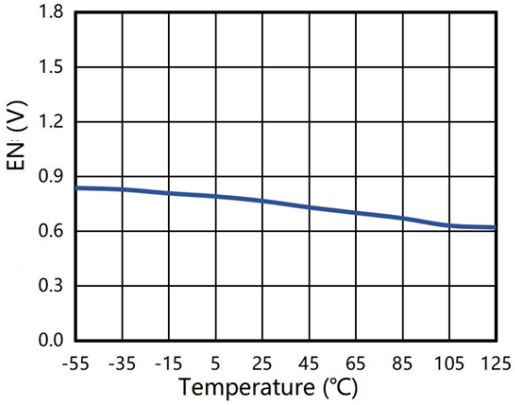


*Figure 8: Quiescent Current vs Temperature*

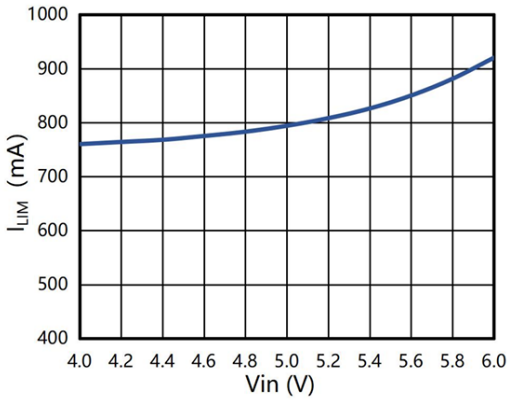


*Figure 9: Input Current vs VIN*

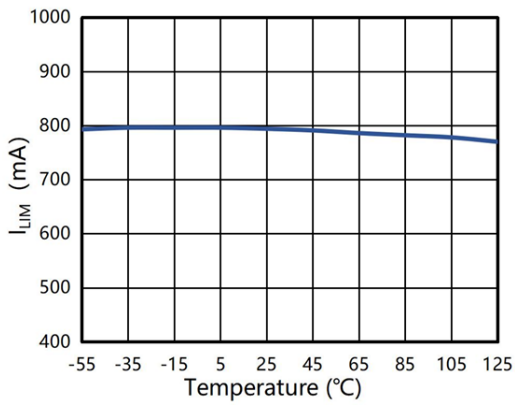


*Figure 10: Input Current vs Temperature*

*Copyright © Feb. 2021, Very Power Incorporated*

# TEST CIRCUITS AND TIMING DIAGRAMS

## Switching Test Circuit

*Figure 11* shows the standard test circuit for evaluating switching parameters including switching frequency (fSW), voltage slew rate (VSLEW), and break-before-make time (tBBM). The VD1 and VD2 outputs drive a resistive load through a center-tapped transformer with VIN and EN connected, and a 10 µF input decoupling capacitor.

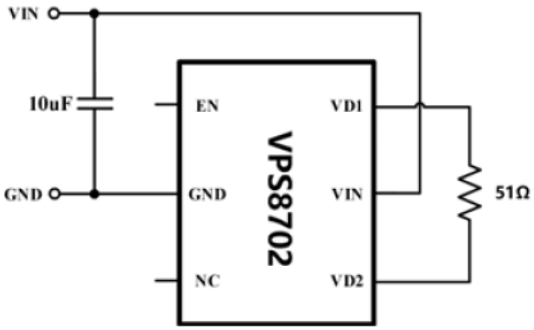


*Figure 11 Standard test circuit for evaluating switching parameters*

## VD1 / VD2 Timing

*Figure 12* illustrates the waveform timing for VD1 and VD2 during operation. The outputs alternate in a push-pull configuration with a 50% duty cycle. A short dead time (tBBM) is introduced between transitions to prevent shoot-through current, ensuring reliable transformer excitation.

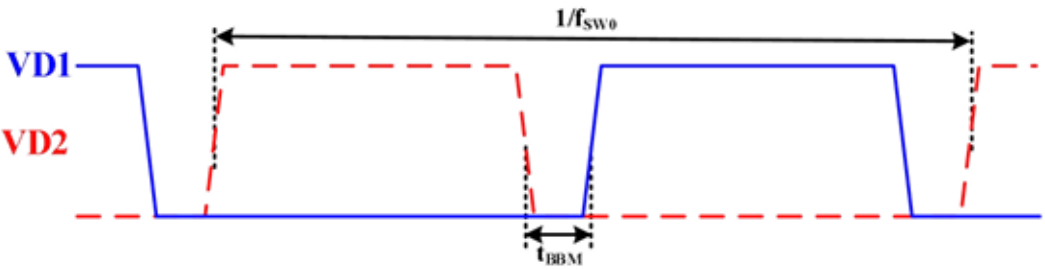


*Figure 12: Waveform timing for VD1 and VD2 during operation*

*Copyright © Feb. 2021, Very Power Incorporated*

## Current Limit Test Circuit

*Figure 13* depicts the current limit (ILIM) test circuit. The output is shorted through a current sense path to VIN while the IC operates normally. This setup is used to determine the peak output current protection level and verify safe operating boundaries.

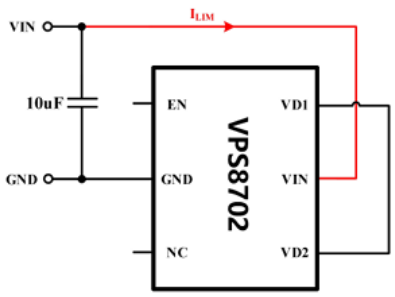


*Figure 13: Current limit (ILIM) test circuit*

## Protection Timing

*Figure 14* shows the timing behavior of the ILIM protection mechanism under thermal stress. It simulates a stepwise increase in temperature, during which the output current momentarily exceeds the threshold and the driver enters thermal shutdown. A timed restart follows once the device has sufficiently cooled, confirming the chip's self-protecting thermal recovery behavior.

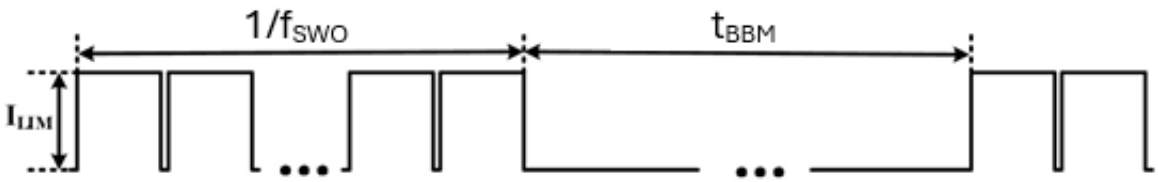


*Figure 14: Timing behavior of the ILIM protection mechanism under thermal stress*

*Copyright © Feb. 2021, Very Power Incorporated*

# FUNCTIONAL DESCRIPTION

## Overview

The VPS8702/S is a low-cost, fully integrated push-pull DC-DC transformer driver suitable for galvanically isolated power supplies. It uses a bridge-drive topology that minimizes transformer winding complexity and component count. It supports input voltages from 3 V to 6 V, offering high compatibility across systems.

During overload conditions, the device limits output current through internal current-limiting circuitry, ensuring internal safety and protecting external components from excessive inrush. A built-in dead time ($t_{BBM}$) is inserted between the complementary output switching channels to avoid cross-conduction. This reduces shoot-through and lowers voltage drop across switching transistors, minimizing switching losses.

The device can be enabled or disabled through the EN pin. When EN is pulled high or left floating (internally pulled high), the device operates normally. When EN is pulled low, the driver shuts down and enters a low-power standby mode, conserving energy.

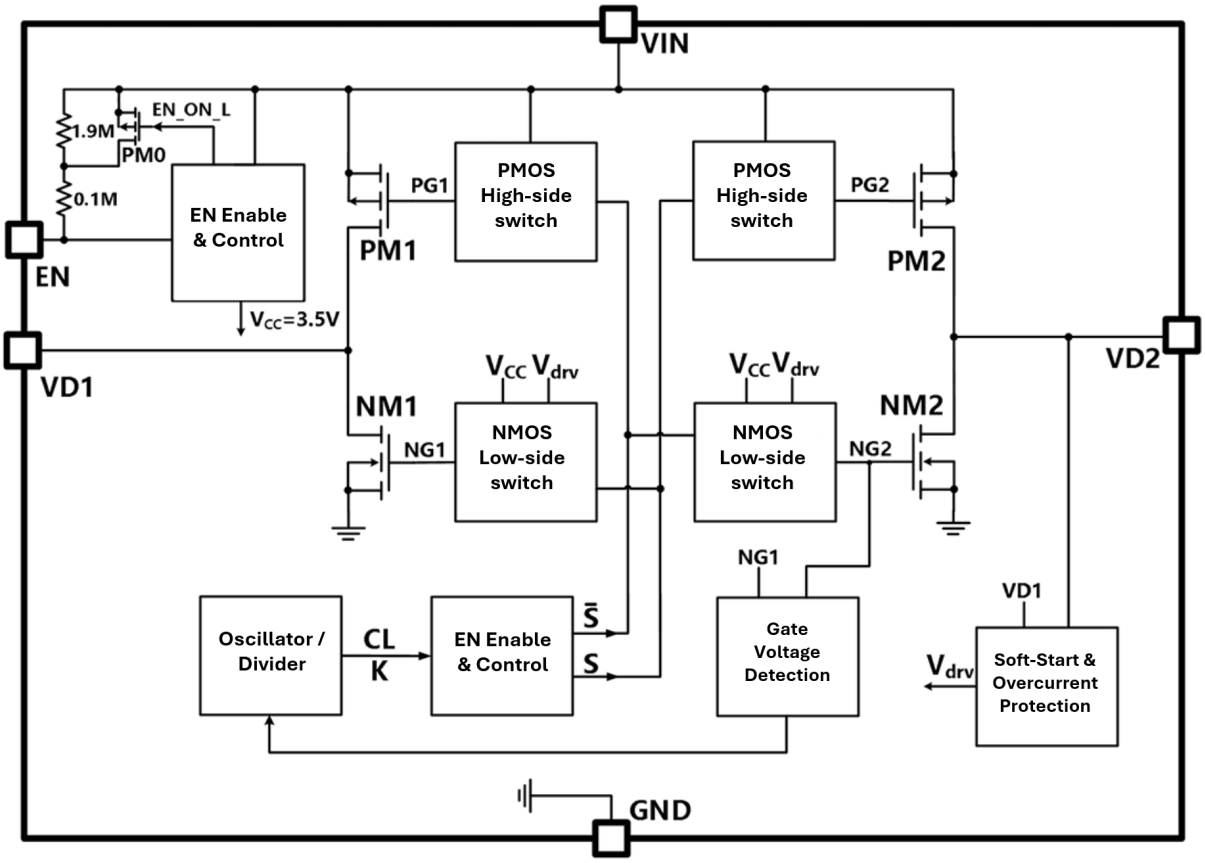


*Figure 15: Functional block diagram*

## Block diagram

The VPS8702 integrates a complete push-pull transformer driver circuit with protection and control features tailored for isolated power applications. Its internal block diagram reveals a logic-controlled gate driver architecture powered from a regulated internal bias (VCC ≈ 3.5 V), which also supports undervoltage lockout (UVLO), thermal shutdown, and enable logic via the EN pin.

*Copyright © Feb. 2021, Very Power Incorporated* 

When enabled, the oscillator and divider block generates complementary timing signals that alternate the operation of two half-bridge driver stages, each consisting of a PMOS and NMOS pair (PM1/NM1 and PM2/NM2), controlled via PG/NG gate nodes.

The push-pull outputs VD1 and VD2 are driven with strict dead-time enforcement (tBBM) to prevent cross-conduction and reduce switching losses.

Additional circuitry provides soft-start behavior and overcurrent protection, while a gate voltage detection block ensures valid conditions before switching. This architecture enables robust, efficient transformer drive with minimal external components, suitable for a wide range of 3 V–6 V isolated supply applications.

## Operating Modes

Figure 8.3.1 shows the timing of the full-bridge output switching.

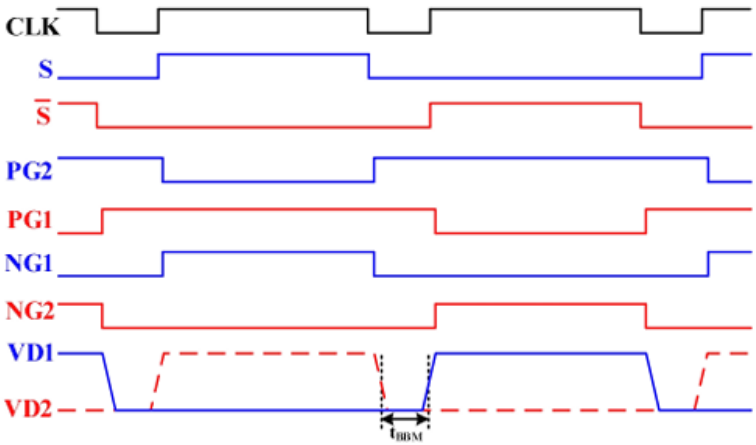


*Figure 16: Timing of full-bridge output switching*

### *Full-Bridge Drive Timing*

NG1 and NG2 represent the gate voltages of the power transistors NM1 and NM2. Both signals have identical high-level pulse widths and a brief period during which both are low — this is the break-before-make time (tBBM), which prevents cross-conduction and reduces switching loss by ensuring low VDS turn-on. tBBM is determined by the low level of the oscillator clock (CLK), and therefore depends on switching frequency: lower frequency leads to a longer dead time. Gate voltage is sensed after switching off NM1 and NM2 to generate the dead time dynamically and compensate for propagation and temperature variation.

### *Current Clamp Drive Mode*

During startup, short circuits, or transformer saturation, excessive current through NM1/NM2 is detected. The driver limits their gate voltages, clamping output current to a safe maximum (ILIM). This protects internal transistors, the transformer, and output diodes from stress and increases converter robustness.

### *Delayed Recovery Overtemperature Protection*

If the chip exceeds its internal temperature threshold, all switching is halted. To resume operation, the device must both cool below the recovery threshold and complete a mandatory delay. This ensures the chip restarts at a lower temperature with greater thermal headroom, improving startup behavior with large output capacitors.

*Copyright © Feb. 2021, Very Power Incorporated* 

### *Output Short-Circuit Protection*

Short-circuit protection is achieved through the combination of current clamp and thermal protection. If a short is detected, the power MOSFETs experience higher drop across them and excessive current, triggering current clamping. This raises die temperature until the thermal shutdown engages. Lower ambient temperatures or input voltages prolong time to shutdown, allowing strong capacitive startup loads.

### *Normal Operating Mode*

At startup, low output voltage results in high initial current, invoking current clamp mode. Once output voltage nears regulation, current decreases and gate drive returns to normal, minimizing RDS(on).

### *Enable/Disable Mode*

To support ultra-low standby current, the EN pin can be driven low (< 0.7 V) to shut down the device. A high level (> 1.3 V) or floating EN re-enables operation. Internally, EN connects to two series resistors: 1.9 MΩ and 0.1 MΩ. When EN is high, the PM0 transistor shorts out the 1.9 MΩ resistor, presenting a strong pull-up. When EN is low, PM0 is off and the total pull-up becomes 2 MΩ, yielding minimal standby current.

### *Operating Principle*

*Figure 17* illustrates the switching operation of the full-bridge converter.

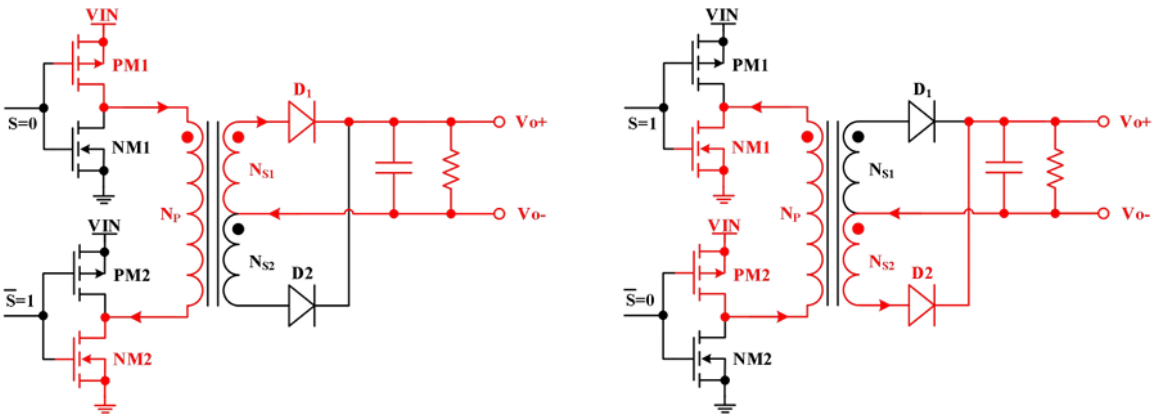


*Figure 17: Switching operation*

When control signal S = 0, PM1 and NM2 are turned on while PM2 and NM1 are off, creating the first half of the switching cycle. Current flows from VIN through PM1, into the transformer primary (NP), out the opposite end, through NM2, and to ground. On the secondary side, current flows through winding NS1 and diode D1 to the output, while D2 remains reverse-biased. When S = 1, PM2 and NM1 turn on while PM1 and NM2 are off. This reverses the current direction through the primary winding. Now, the secondary winding NS2 conducts through diode D2 to the output, while D1 is off.

This switching cycle transfers nearly 100% duty cycle power to the secondary, resulting in high conversion efficiency and excellent dynamic response. Although the circuit ideally requires only minimal output capacitance due to its inherent symmetry, a short dead time is intentionally inserted to avoid cross-conduction and reduce switching loss. During this interval, power delivery is briefly interrupted, and the output capacitor supplies the load — introducing a small ripple.

*Copyright © Feb. 2021, Very Power Incorporated* 

### *Transformer Core Magnetization*

*Figure 18* shows the B-H curve for transformer core magnetization. For proper transformer operation, the core must maintain volt-second balance — that is, the voltage-time product during magnetization must equal that of demagnetization. Otherwise, magnetic saturation may occur.

When PM1 and NM2 are on, the core enters the magnetization phase, and the magnetic flux density B increases along path A → A'. Once they turn off, B reaches its maximum. During the next cycle, PM2 and NM1 activate, driving the demagnetization phase, with B decreasing from A' → A. The B-field amplitude is determined by the product of applied voltage (VP) and switch-on time (Ton), referred to as the volt-second product. If magnetization and demagnetization energy are unbalanced, flux bias builds up over time and may exceed the saturation limit of the magnetic material, disrupting transformer operation.

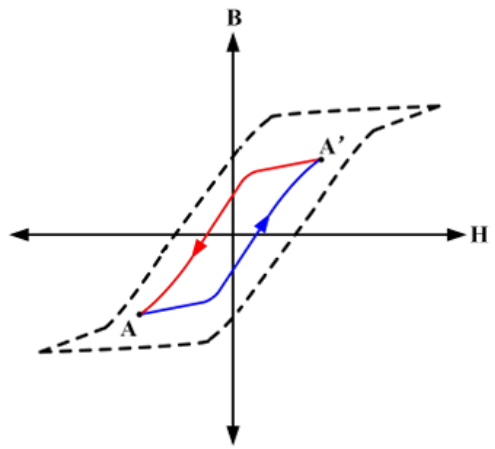


*Figure 18 Transformer core Magnetization*

*Copyright © Feb. 2021, Very Power Incorporated*

# TYPICAL APPLICATION CIRCUIT

## Circuit Design

The typical application circuit in Figure 10.1 shows a complete isolated power supply using the VPS8702 driver IC and the VPT87BB-01B transformer. The circuit is configured for a 5 V input and produces a 5 V unregulated isolated output capable of delivering up to 1 W of power. A single diode rectifier and output filter capacitor smooth the isolated voltage. The proposed design offers up to 3000 VDC isolation between input and output, suitable for high-reliability or safety-critical applications such as CAN bus transceiver isolation.

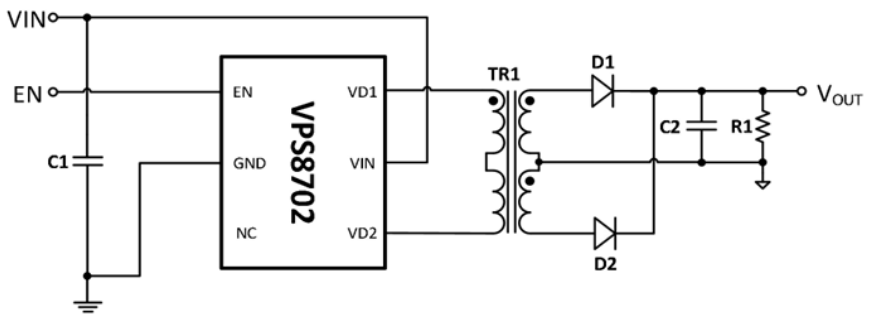


*Figure 19: Typical application circuit*

The following table outlines the relevant electrical specifications:

| Technical Parameter | Min | Typ | Max | Unit |
|---|---|---|---|---|
| Input Voltage | 4.5 | 5.0 | 5.5 | V |
| Output Voltage | --- | 5.0 | --- | V |
| Output Current | --- | 0.2 | --- | A |
| Output Ripple + Noise | --- | 50 | 100 | mV |
| Line Regulation | --- | --- | 1.5 | % |
| Load Regulation | --- | --- | 10 | % |
| Conversion Efficiency | --- | 85 | --- | % |
| Short Circuit Protection | Continuous, Self-recovery | | | |
| Operating Temperature | -40 | | 85 | °C |
| Isolation Voltage | 1500 | | | VDC |

## Input Capacitor Selection

As shown in Figure 9, input capacitor C1 provides energy storage, filtering, and decoupling. If necessary, an additional 0.1 μF ceramic capacitor can be placed close to the VIN–GND pins of the chip for high-frequency decoupling. During the switching cycle, C1 must supply transient current to the transformer driver, so its capacitance should be selected between 1 μF and 10 μF to limit input voltage ripple. The capacitor's voltage rating must exceed the maximum input voltage and should be derated accordingly. A low-ESR, temperature-stable ceramic capacitor is recommended. For optimal filtering, place C1 as close to the chip as possible, with thick, short traces in the power loop to minimize parasitic inductance and voltage spikes.

*Copyright © Feb. 2021, Very Power Incorporated* 

### *Output Rectifier Diode Selection*

The output rectifier diodes should be Schottky types with low forward voltage drop and fast reverse recovery, improving load regulation and efficiency. In this full-wave rectified topology, the reverse voltage stress on the diodes can reach up to twice the output voltage. Therefore, choose rectifier diodes rated for at least twice the maximum output voltage under worst-case input voltage and load conditions, with derating. The diodes must also meet the system's temperature range. At elevated temperatures, reverse leakage increases substantially in Schottky diodes, so derating based on thermal behavior is essential. Refer to the diode's datasheet for derating curves.

## Output Capacitor Selection

Although the full-bridge converter can theoretically operate at 100% duty cycle and provide symmetrical energy delivery, practical limitations necessitate a short dead time during switching to prevent shoot-through and reduce loss. During this dead time, energy delivery to the load is interrupted, and the output capacitor must provide energy to maintain output voltage. A minimum of 3 μF output capacitance is recommended to ensure stable voltage during load transients. In this application, C3 is suggested to be 4.7 μF–10 μF. Low-ESR capacitors are preferred for minimizing ripple and optimizing transient response.

## Transformer Design and Parameter Selection

### *Primary-to-Secondary Turns Ratio*

To ensure the output diodes operate within safe current limits during all operating conditions, calculate the peak diode current using:

$$ID\text{-}MAX = (NP / NS) \times ILIM\text{-}MAX$$

where NP and NS are the primary and secondary turns, respectively, and ILIM-MAX is the chip's internal current limit (typically 800 mA, max 1050 mA).

To handle startup surge and fault conditions, select Schottky diodes with sufficient forward current surge capability. In this design, the RB160M-30 is selected. At 75 °C and 0.2 A forward current, its typical forward voltage is ~280 mV. Reverse leakage current is ~90 μA at 15 V. Its peak surge rating is IFSM = 30 A. Ensure chosen diodes meet surge and thermal ratings for all use cases.

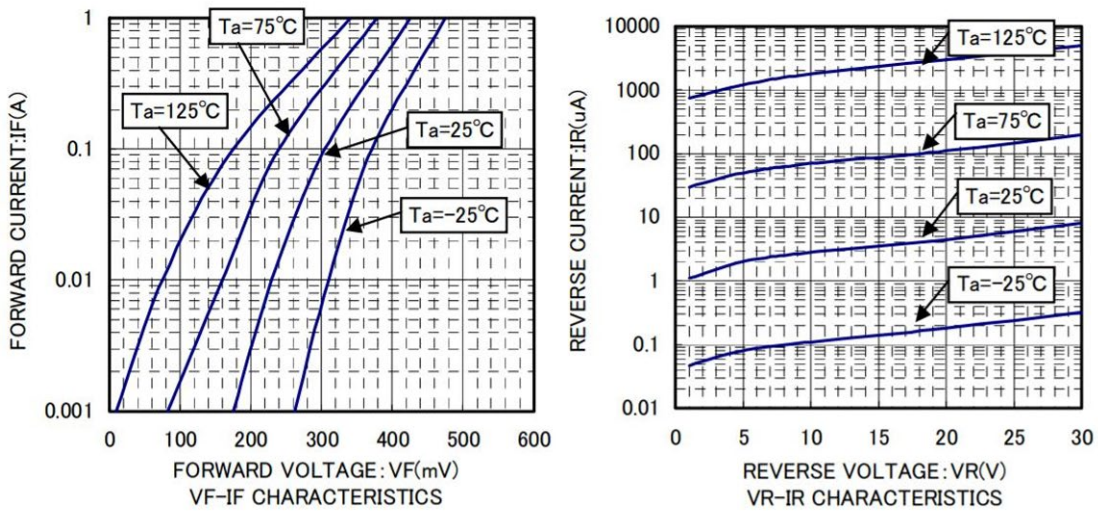


*Figure 20: RB160M-30 Schottky diode characteristics*

### *Turns Ratio Design*

For symmetrical push-pull drive, the transformer should meet the minimum turns ratio required to deliver sufficient energy at low input voltage:

$$VP = V_{IN} - (PO\text{-}MAX / \eta V_{IN}) \times (RDSP(ON) + RDSN(ON))$$
$$VS = VO\text{-}MIN + VF$$
$$NPS = VP / VS$$

For this design:

$$VIN = 5\ V \pm 10\%,\ VO = 5\ V,\ PO\text{-}MAX = 1\ W,\ \eta = 85\%,\ RDSP + RDSN \approx 0.85\ \Omega,\ VF \approx 0.34\ V$$
$$NPS = (5 - 1 / (0.85 \times 5)) \times 0.85 / (5 \times 0.97 + 0.34) \approx 0.925$$

This yields an effective turns ratio of approximately 1:1, validating the use of the VPT87BB-01A transformer.

### *Core Volt-Time Product*

The core volt-time product Vt must be sufficient to avoid saturation under all conditions. It is given by:

$$Vt\text{-}MIN \geq (V_{IN\text{-}MAX} \times TMAX) / (2 \times f_{MIN})$$

For VPS8702 operating at f = 340 kHz (min 306 kHz), and VIN = 5.5 V:

$$Vt\text{-}MIN \geq 5.5 \times 1.10 \times (1 / (2 \times 306\ kHz)) \approx 9\ \mu Vs$$

Choose a transformer that satisfies this volt-second product and offers appropriate primary/secondary isolation, interwinding capacitance, and leakage inductance for stability and EMI suppression.

### *7.4 Layout Recommendations*

- Minimize trace lengths between driver and transformer
- Place 1 µF decoupling capacitor close to VIN and GND
- Keep diode and capacitor traces short and direct
- Maintain clear separation between primary and secondary ground planes

*Copyright © Feb. 2021, Very Power Incorporated*

# PACKAGE OUTLINES

## SOT23-6

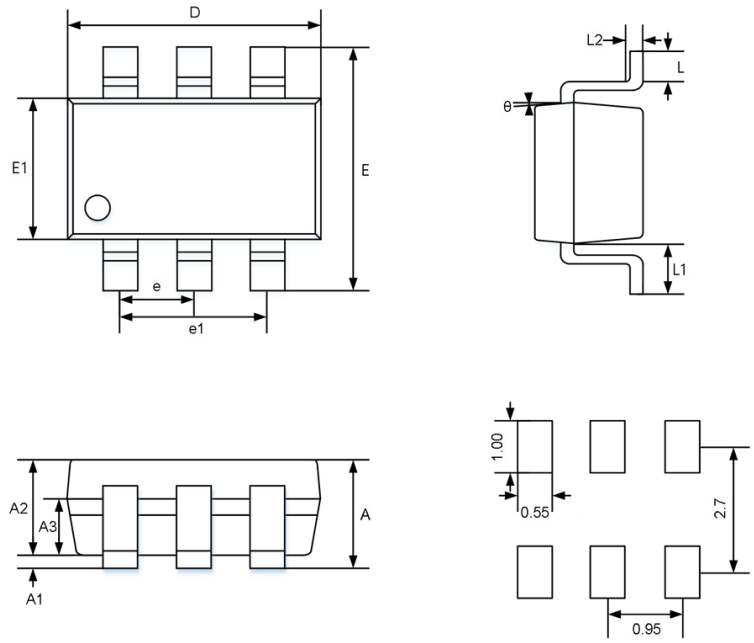


| DIMENSION TABLE | | | |
|---|---|---|---|
| SYMBOL | MILLIMETER | | |
| | MINIMUM | NOMINAL | MAXIMUM |
| A | --- | --- | 1.25 |
| A1 | 0.00 | --- | 0.15 |
| A2 | 1.00 | 1.10 | 1.20 |
| A3 | 0.60 | 0.65 | 0.70 |
| D | 2.826 | 2.926 | 3.026 |
| E | 2.60 | 2.80 | 3.00 |
| E1 | 1.526 | 1.626 | 1.726 |
| e | 0.90 | 0.95 | 1.00 |
| e1 | 1.80 | 1.90 | 2.00 |
| L | 0.35 | 0.45 | 0.60 |
| L1 | 0.59REF | | |
| L2 | 0.25BSC | | |
| θ | 3° | 5° | 7° |

## ESOP-8

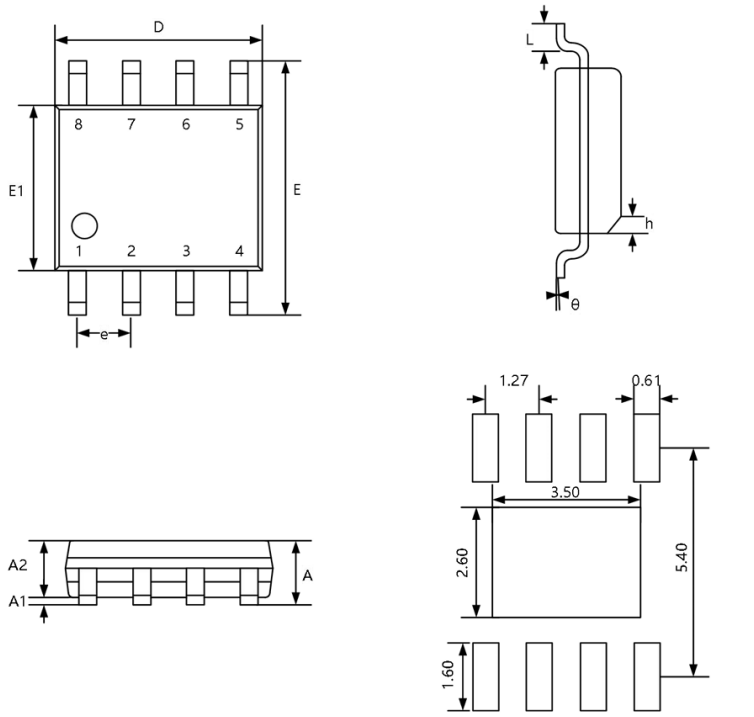


| DIMENSION TABLE | | | |
|---|---|---|---|
| SYMBOL | MILLIMETER | | |
| | MINIMUM | NOMINAL | MAXIMUM |
| A | 1.35 | --- | 1.75 |
| A1 | 0.10 | --- | 0.25 |
| A2 | 0.10 | --- | 0.25 |
| b | 0.35 | --- | 0.49 |
| c | 0.19 | --- | 0.25 |
| D | 4.80 | --- | 5.00 |
| E | 5.80 | --- | 6.20 |
| E1 | 3.80 | --- | 4.00 |
| e | 1.27BSC | | |
| L | 0.40 | --- | 1.25 |
| h | 0.25 | --- | 0.50 |
| θ | 0° | --- | 7° |

*Copyright © Feb. 2021, Very Power Incorporated*

# ORDERING INFORMATION

| Part Number | Package Type | Pin Count | Packaging Method | Quantity | Marking* | MSL Level |
|---|---|---|---|---|---|---|
| VPS8702 | SOT23-6 | 6 | Tape & Reel | 3000 | VPS8702 XXXX | MSL-3 |
| VPS8702S | ESOP-8 | 8 | Tape & Reel | 2500 | VPS8702S XXXX | MSL-3 |

*Copyright © Feb. 2021, Very Power Incorporated*