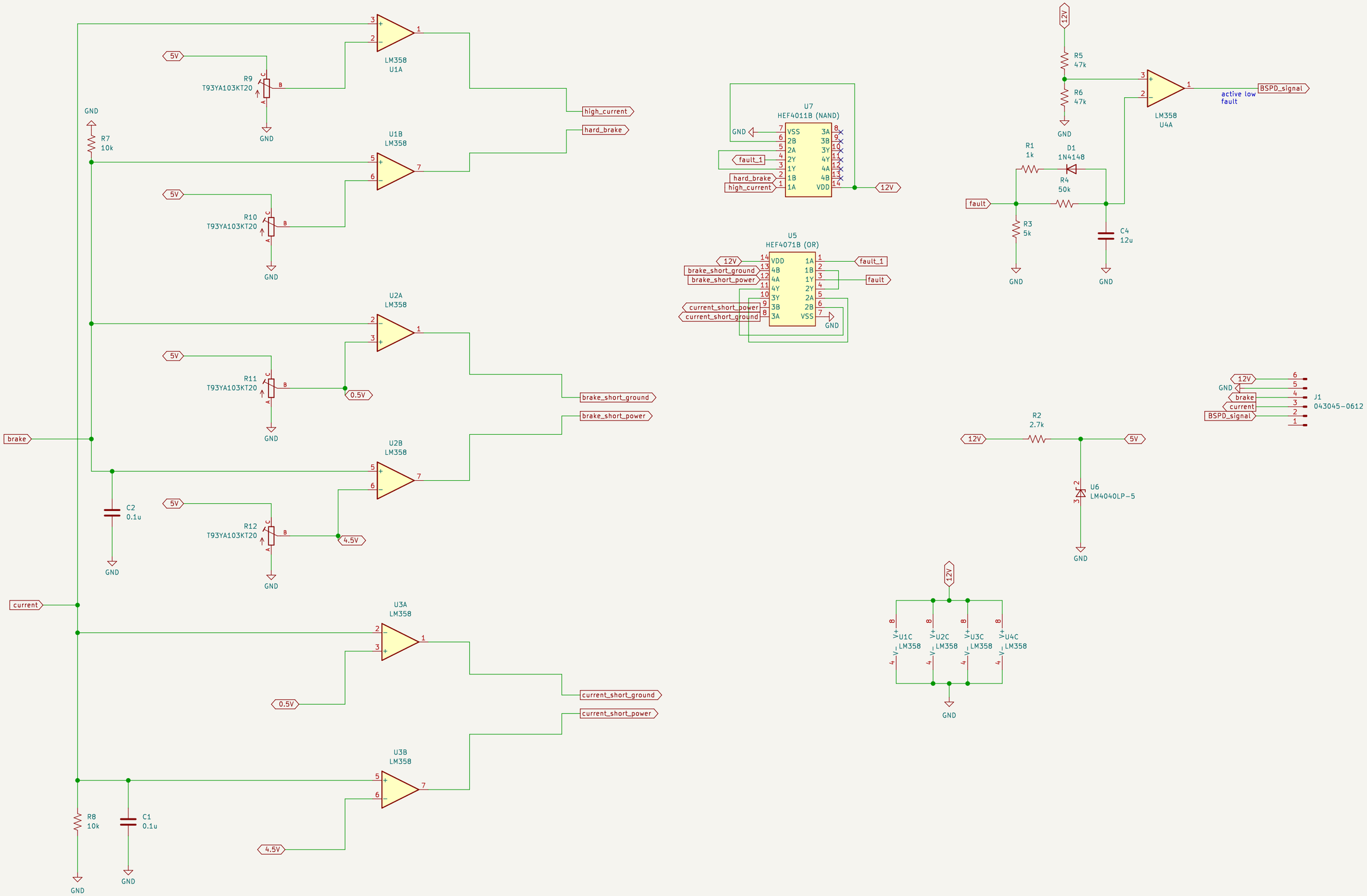
LM358
U1A
R9
T93YA103KT20
5V
GND
R7
10k
U1B
LM358
R10
T93YA103KT20
U2A
LM358
R11
T93YA103KT20
0.5V
U2B
LM358
R12
T93YA103KT20
4.5V
C2
0.1u
U3A
LM358
U3B
LM358
R8
10k
C1
0.1u
high_current
hard_brake
brake_short_ground
brake_short_power
current_short_ground
current_short_power
brake
current
U7
HEF4011B (NAND)
fault_1
U5
HEF4071B (OR)
12V
fault
R5
47k
R6
47k
LM358
U4A
active low
fault
BSPD_signal
R1
1k
D1
1N4148
R4
50k
R3
5k
C4
12u
J1
043045-0612
R2
2.7k
U6
LM4040LP-5
U1C
LM358
U2C
LM358
U3C
LM358
U4C
LM358