I2C Address Map		
Function	I2C Mux	I2C Address
PT_DAC	I2C0	1100000 (Programmable)
PT_ADC	I2C0	1001001
TC_DAC	I2C1	1100000 (Programmable)
RTD0	I2C2	0100000
RTD1	I2C2	0100001
HE_ADC	I2C3	1001001
MISC	I2C3	0100000

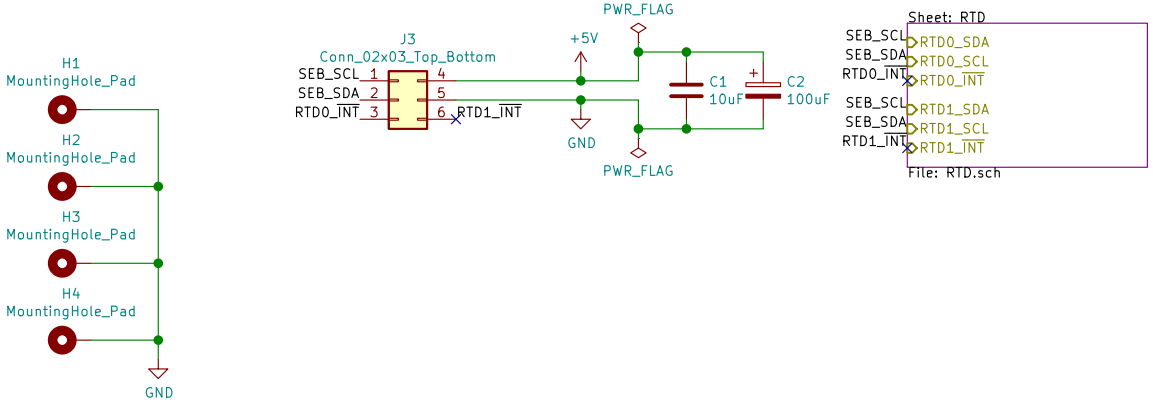

Sheet: /
File: SensorExtentionBoard.sch

Title:

Size: A4	Date:	Rev:
KiCad E.D.A. kicad 5.1.6-c6e7f7d86ubuntu18.04.1		Id: 1/2

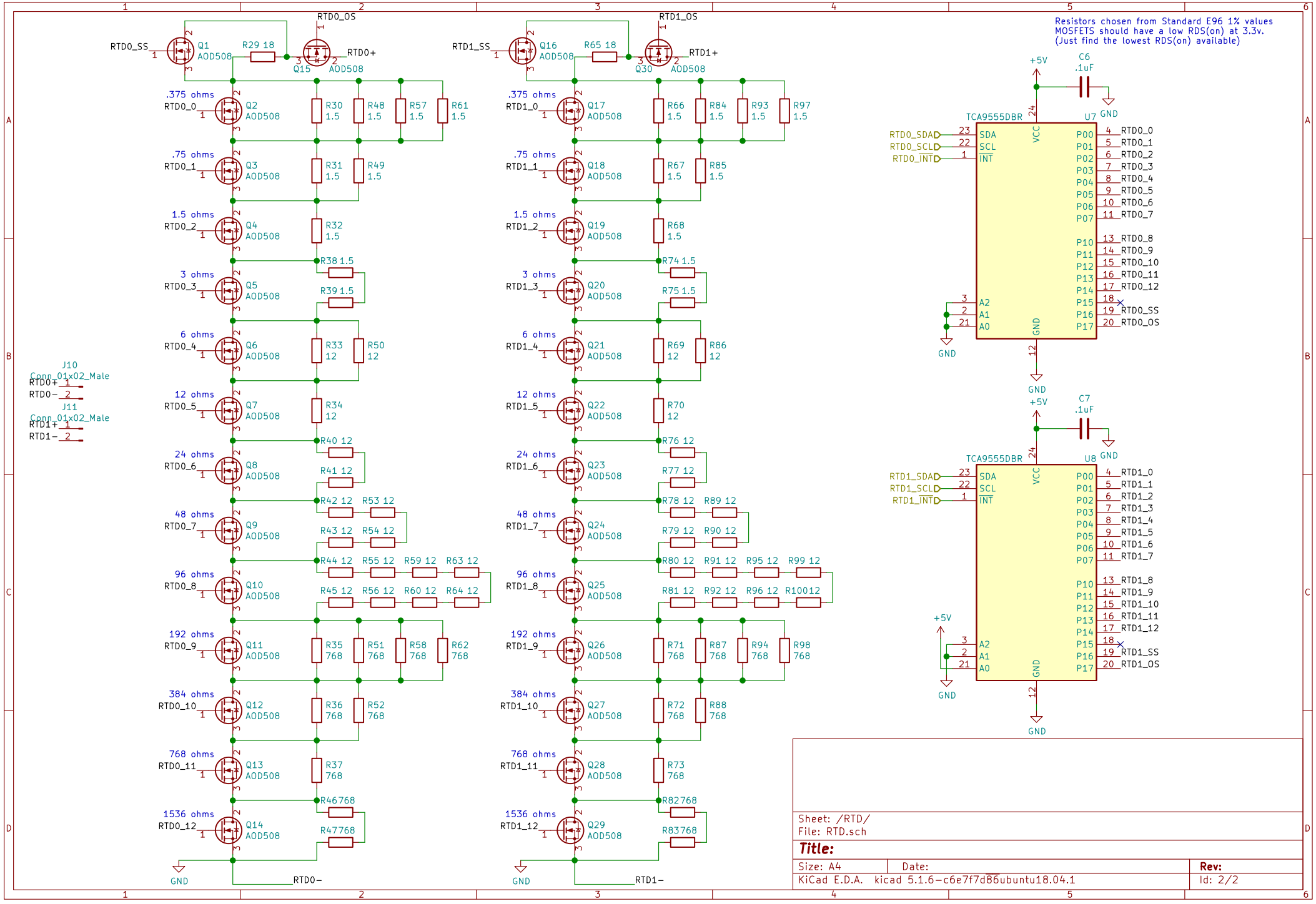
Resistors chosen from Standard E96 1% values
MOSFETS should have a low RDS(on) at 3.3v.
(Just find the lowest RDS(on) available)
RTD0_SS
RTD0_OS
RTD0+
RTD0−
RTD1_SS
RTD1_OS
RTD1+
RTD1−
Q1 AOD508
R29 18
Q15 AOD508
Q16 AOD508
R65 18
Q30 AOD508
.375 ohms RTD0_0 Q2 AOD508 R30 1.5 R48 1.5 R57 1.5 R61 1.5
.75 ohms RTD0_1 Q3 AOD508 R31 1.5 R49 1.5
1.5 ohms RTD0_2 Q4 AOD508 R32 1.5 R38 1.5
3 ohms RTD0_3 Q5 AOD508 R39 1.5
6 ohms RTD0_4 Q6 AOD508 R33 12 R50 12
12 ohms RTD0_5 Q7 AOD508 R34 12 R40 12
24 ohms RTD0_6 Q8 AOD508 R41 12 R42 12 R53 12
48 ohms RTD0_7 Q9 AOD508 R43 12 R54 12 R44 12 R55 12 R59 12 R63 12
96 ohms RTD0_8 Q10 AOD508 R45 12 R56 12 R60 12 R64 12
192 ohms RTD0_9 Q11 AOD508 R35 768 R51 768 R58 768 R62 768
384 ohms RTD0_10 Q12 AOD508 R36 768 R52 768
768 ohms RTD0_11 Q13 AOD508 R37 768 R46 768
1536 ohms RTD0_12 Q14 AOD508 R47 768
.375 ohms RTD1_0 Q17 AOD508 R66 1.5 R84 1.5 R93 1.5 R97 1.5
.75 ohms RTD1_1 Q18 AOD508 R67 1.5 R85 1.5
1.5 ohms RTD1_2 Q19 AOD508 R68 1.5 R74 1.5
3 ohms RTD1_3 Q20 AOD508 R75 1.5
6 ohms RTD1_4 Q21 AOD508 R69 12 R86 12
12 ohms RTD1_5 Q22 AOD508 R70 12 R76 12
24 ohms RTD1_6 Q23 AOD508 R77 12 R78 12 R89 12
48 ohms RTD1_7 Q24 AOD508 R79 12 R90 12 R80 12 R91 12 R95 12 R99 12
96 ohms RTD1_8 Q25 AOD508 R81 12 R92 12 R96 12 R10012
192 ohms RTD1_9 Q26 AOD508 R71 768 R87 768 R94 768 R98 768
384 ohms RTD1_10 Q27 AOD508 R72 768 R88 768
768 ohms RTD1_11 Q28 AOD508 R73 768 R82 768
1536 ohms RTD1_12 Q29 AOD508 R83 768
J10 Conn_01x02_Male
RTD0+ 1
RTD0− 2
J11 Conn_01x02_Male
RTD1+ 1
RTD1− 2
GND
+5V
C6 .1uF
C7 .1uF
TCA9555DBR U7
TCA9555DBR U8
RTD0_SDA 23 SDA
RTD0_SCL 22 SCL
RTD0_INT 1 INT
VCC 24
A2 3
A1 2
A0 21
GND 12
P00 4 RTD0_0
P01 5 RTD0_1
P02 6 RTD0_2
P03 7 RTD0_3
P04 8 RTD0_4
P05 9 RTD0_5
P06 10 RTD0_6
P07 11 RTD0_7
P10 13 RTD0_8
P11 14 RTD0_9
P12 15 RTD0_10
P13 16 RTD0_11
P14 17 RTD0_12
P15 18
P16 19 RTD0_SS
P17 20 RTD0_OS
RTD1_SDA 23 SDA
RTD1_SCL 22 SCL
RTD1_INT 1 INT
P00 4 RTD1_0
P01 5 RTD1_1
P02 6 RTD1_2
P03 7 RTD1_3
P04 8 RTD1_4
P05 9 RTD1_5
P06 10 RTD1_6
P07 11 RTD1_7
P10 13 RTD1_8
P11 14 RTD1_9
P12 15 RTD1_10
P13 16 RTD1_11
P14 17 RTD1_12
P15 18
P16 19 RTD1_SS
P17 20 RTD1_OS
Sheet: /RTD/
File: RTD.sch
Title:
Size: A4
Date:
Rev:
KiCad E.D.A. kicad 5.1.6-c6e7f7d86ubuntu18.04.1
Id: 2/2