Relation among classes

Presentation by Willi the dinosaur

Benjamin Bies, Jeremias Wolfs, Martin Schmidt

Depth of the inheritance tree

Code Reuse
Vs.
Complexity

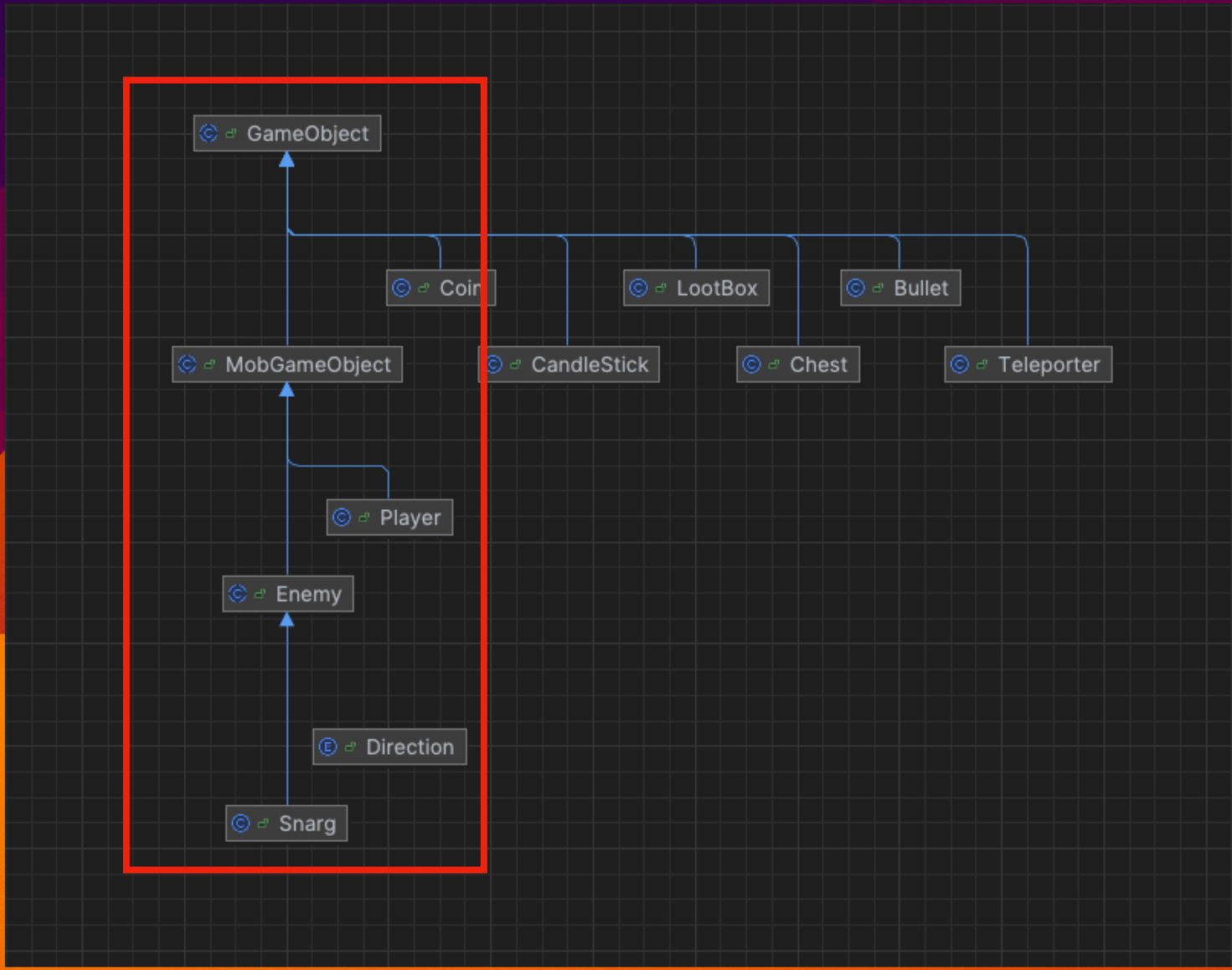

Depth of the inheritance tree

Code Reuse
Vs.
Complexity

```
public abstract class MobGameObject extends GameObject {
```

Number of Children

Amount of children in the entire inheritance tree

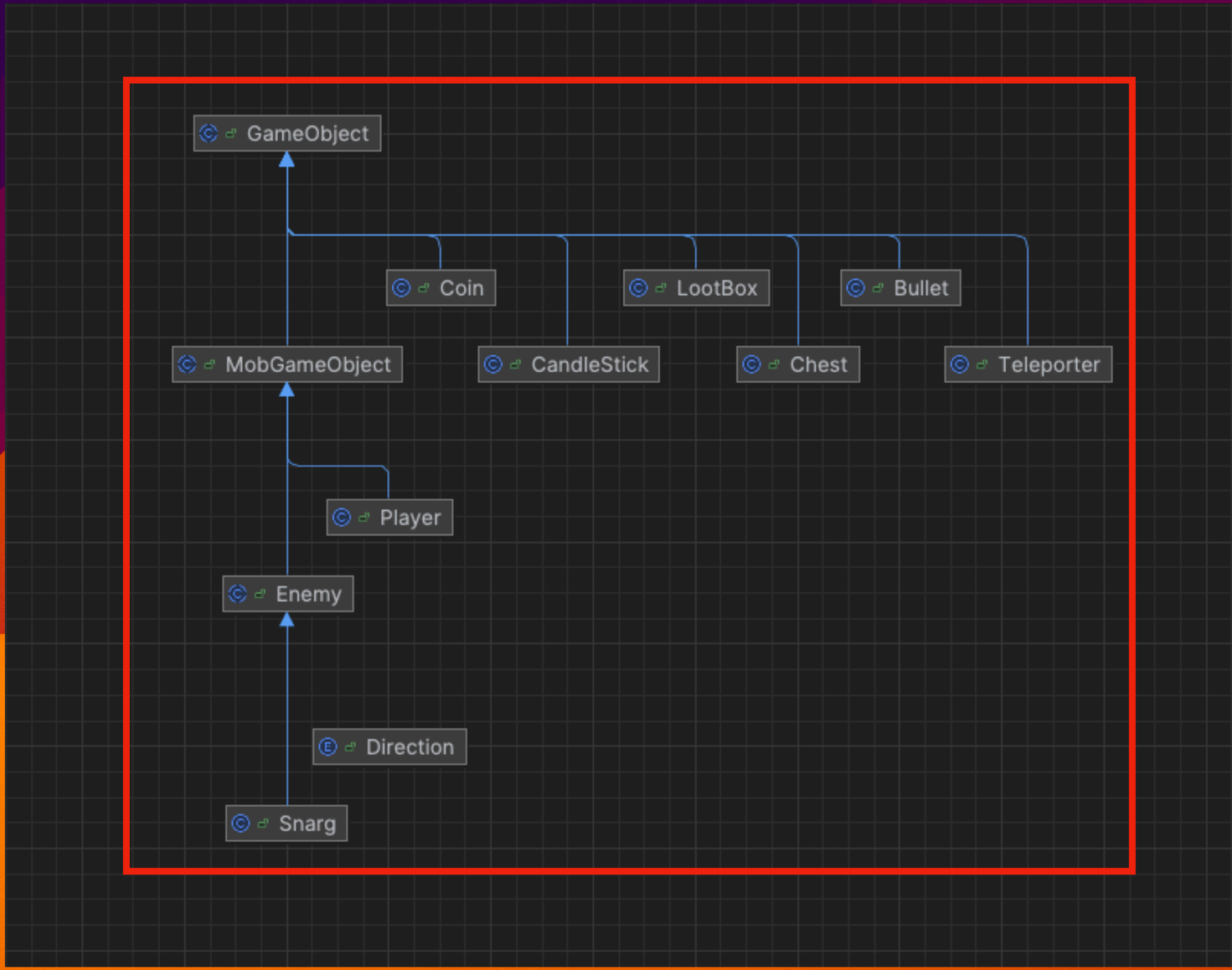

Number of Children

Amount of children in the entire inheritance tree

```
public abstract class MobGameObject extends GameObject {
```

Method inheritance factor

Does a project use the inheritance effectively?

Method inheritance factor

Does a project use the inheritance effectively?

MIF is calculated by dividing the number of all inherited methods in all classes by the sum of all methods available of all classes.

Very Low MIF
“bed smell” since inheritance is probably not very well utilised

High MIF
The degree to which the class architecture of an object oriented system makes use of inheritance for both methods and attributes.

Method inheritance factor

Does a project use the inheritance effectively?

MIF is calculated by dividing the number of all inherited methods in all classes by the sum of all methods available of all classes.

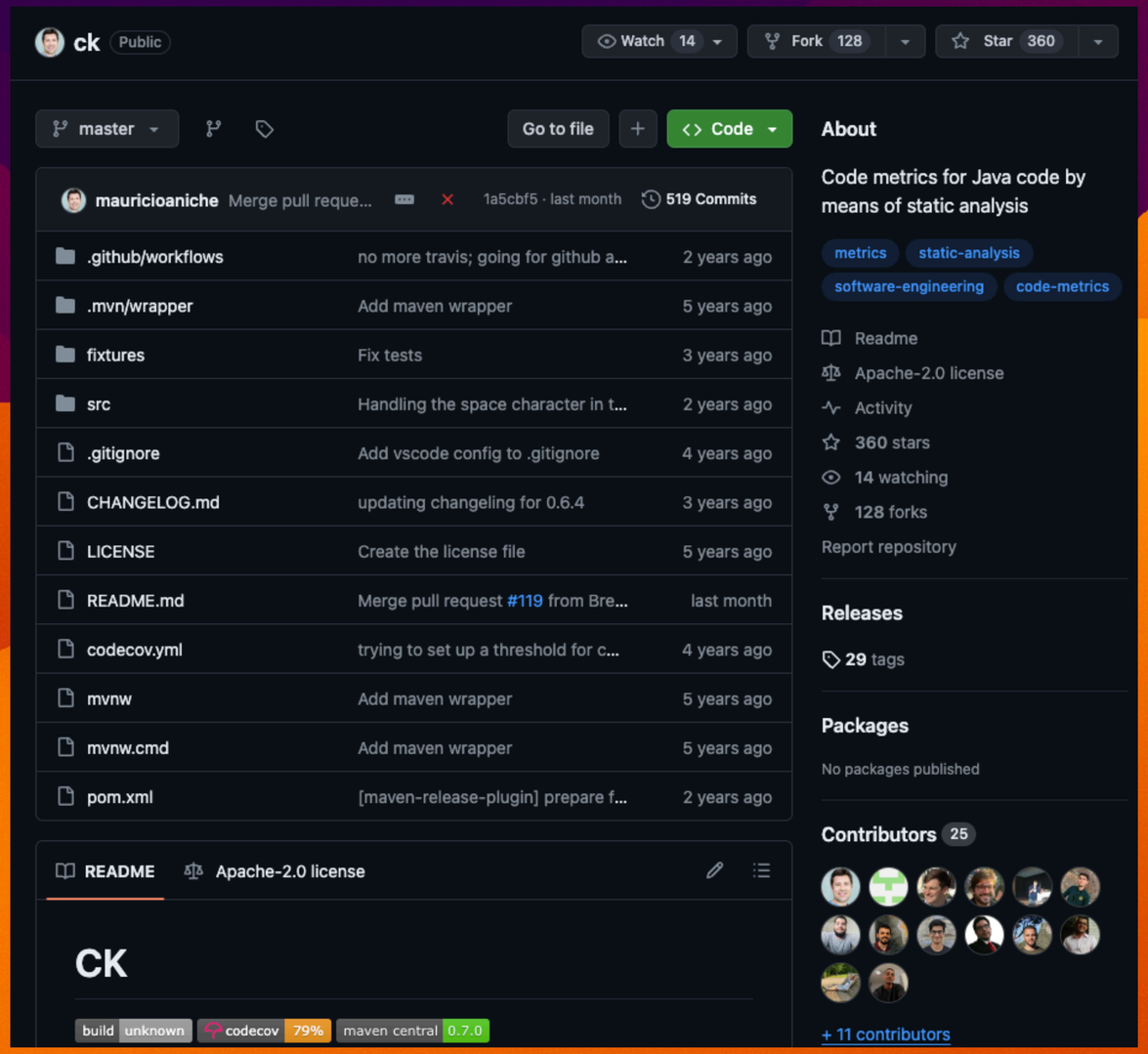

Response for a class

RFC is the number of all possible methods to be executed.

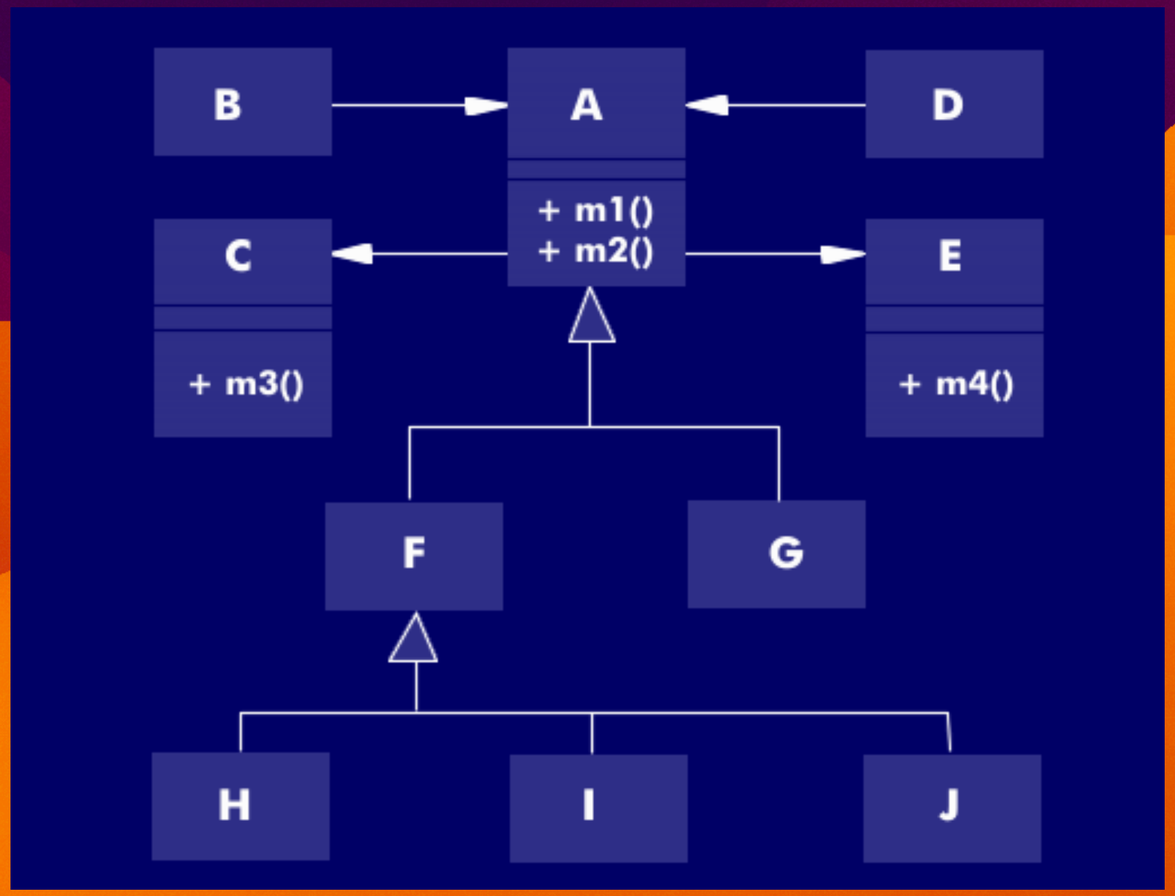

Response for a class

RFC is the number of all possible methods to be executed.

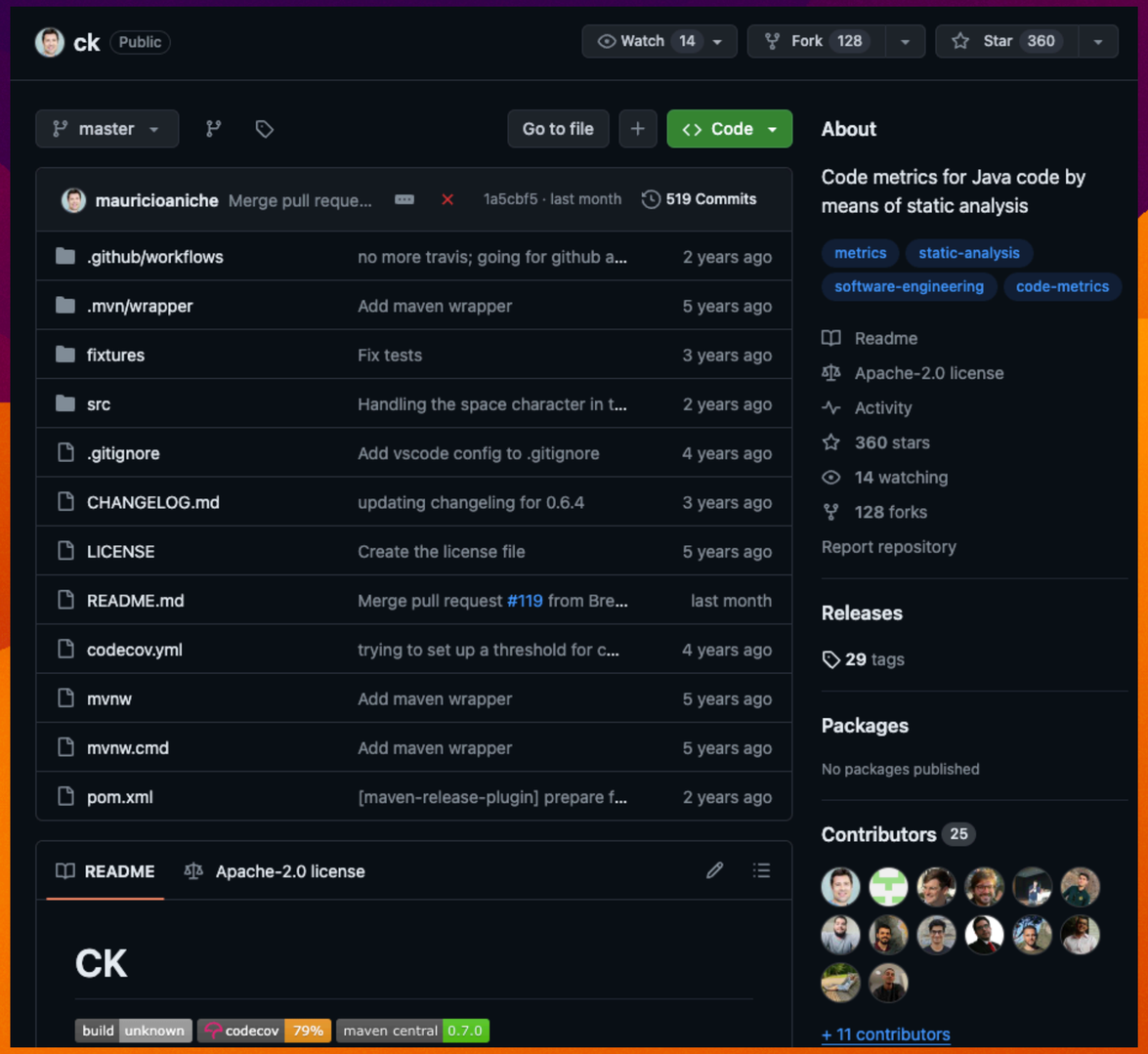

Willi says thank you! 🦖