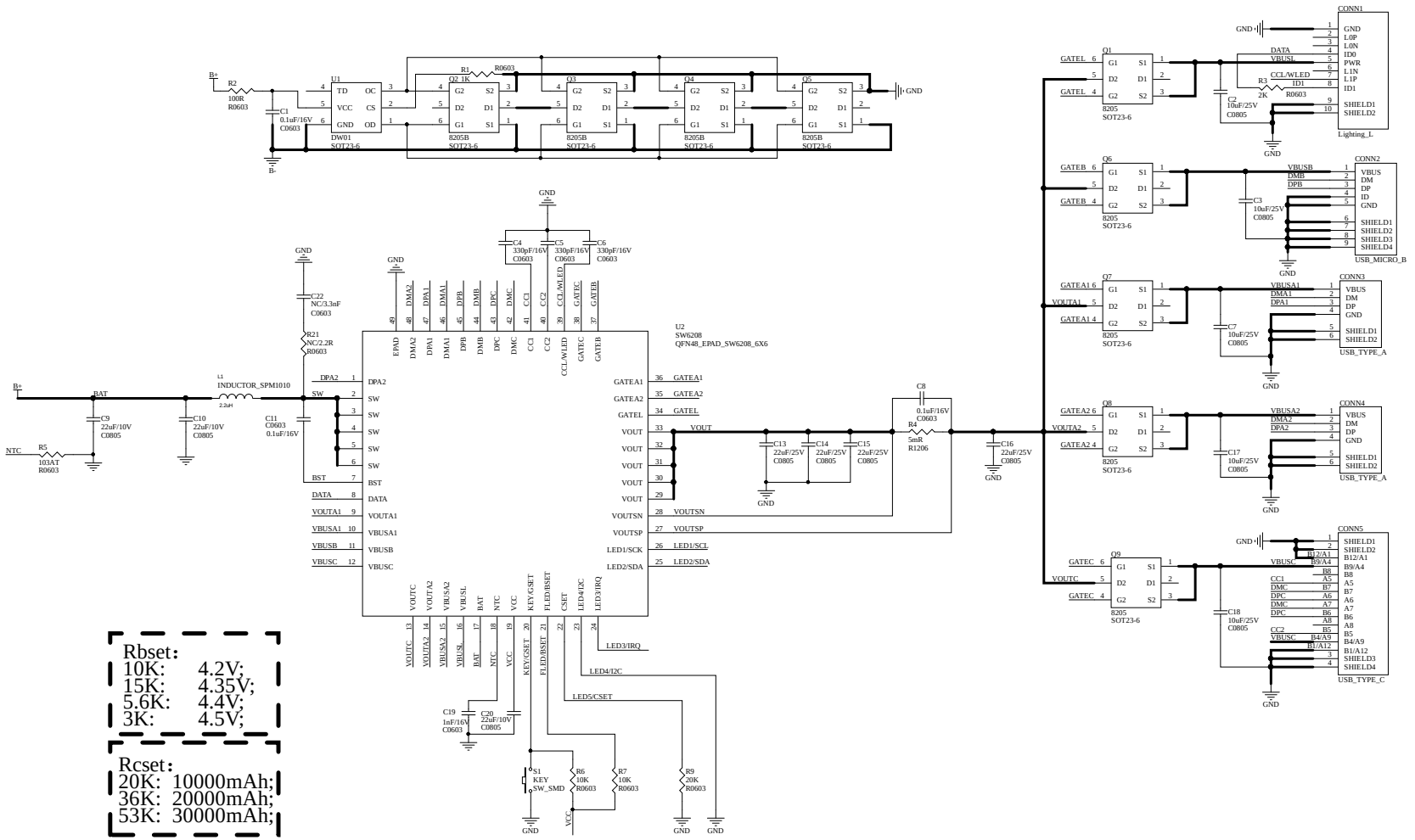

Rbset:
10K: 4.2V;
15K: 4.35V;
5.6K: 4.4V;
3K: 4.5V;

Rcset:
20K: 10000mAh;
36K: 20000mAh;
53K: 30000mAh;

Title		
Size A2	Number	Revision
Date: 2020/9/6	Sheet	of
File: G:\data\..\SW6208+A+A+B+C+L+MCU+LED.SchDoc		