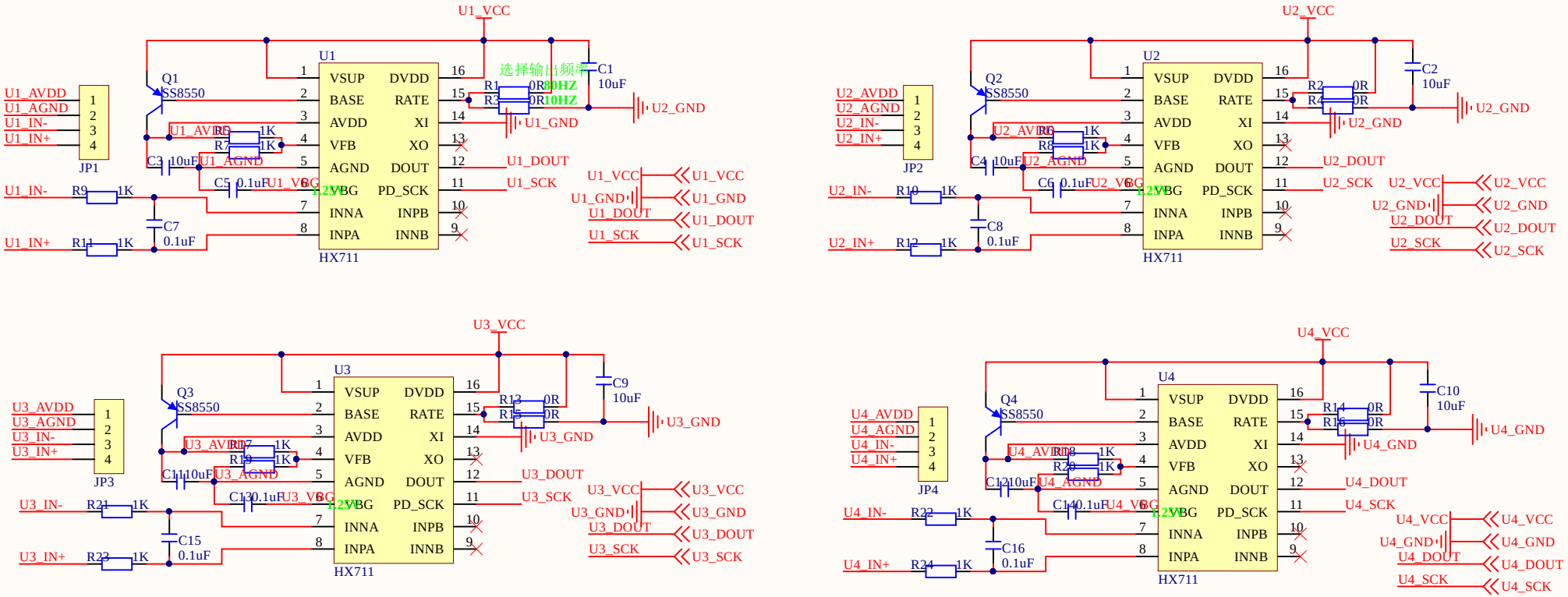

Title		
Size A4	Number	Revision
Date: 2020/12/6	Sheet of	
File: E:\Hardware\..\HX711.SchDoc	Drawn By:	

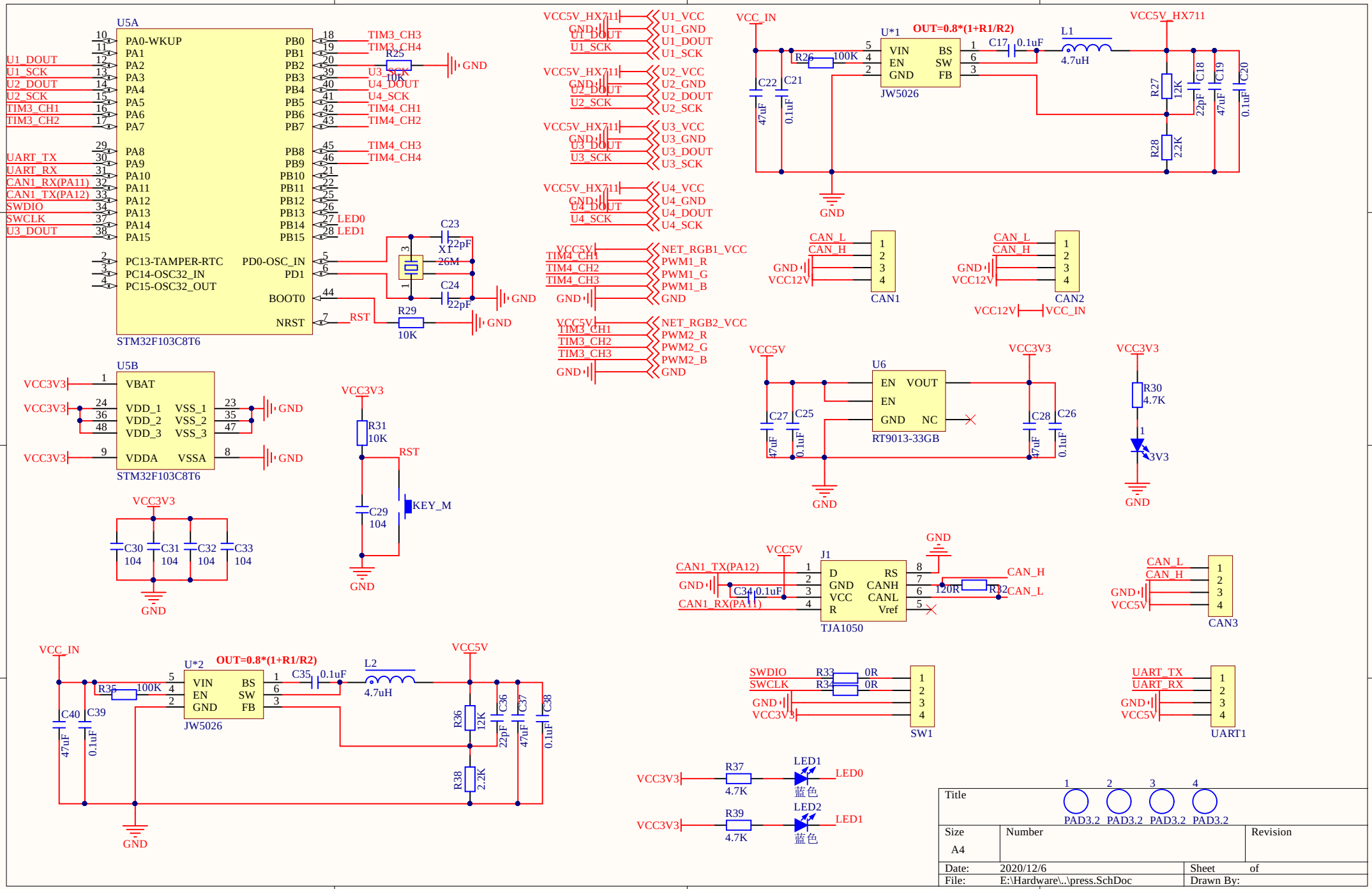
U5A
STM32F103C8T6
PA0-WKUP
PA1
PA2
PA3
PA4
PA5
PA6
PA7
PA8
PA9
PA10
PA11
PA12
PA13
PA14
PA15
PC13-TAMPER-RTC
PC14-OSC32_IN
PC15-OSC32_OUT
BOOT0
NRST
PB0
PB1
PB2
PB3
PB4
PB5
PB6
PB7
PB8
PB9
PB10
PB11
PB12
PB13
PB14
PB15
PD0-OSC_IN
PD1
U1_DOUT
U1_SCK
U2_DOUT
U2_SCK
TIM3_CH1
TIM3_CH2
UART_TX
UART_RX
CAN1_RX(PA11)
CAN1_TX(PA12)
SWDIO
SWCLK
U3_DOUT
TIM3_CH3
TIM3_CH4
U3_SCK
U4_DOUT
U4_SCK
TIM4_CH1
TIM4_CH2
TIM4_CH3
TIM4_CH4
LED0
LED1
R25
10K
GND
C23
22pF
X1
26M
C24
22pF
R29
10K
RST
U5B
STM32F103C8T6
VBAT
VDD_1
VDD_2
VDD_3
VDDA
VSS_1
VSS_2
VSS_3
VSSA
VCC3V3
R31
10K
C29
104
KEY_M
C30
104
C31
104
C32
104
C33
104
VCC5V_HX711
GND
U1_VCC
U1_GND
U1_DOUT
U1_SCK
U2_VCC
U2_GND
U2_DOUT
U2_SCK
U3_VCC
U3_GND
U3_DOUT
U3_SCK
U4_VCC
U4_GND
U4_DOUT
U4_SCK
VCC5V
NET_RGB1_VCC
PWM1_R
PWM1_G
PWM1_B
NET_RGB2_VCC
PWM2_R
PWM2_G
PWM2_B
VCC_IN
U*1
OUT=0.8*(1+R1/R2)
VIN
EN
GND
BS
SW
FB
JW5026
R26
100K
C22
47uF
C21
0.1uF
C17
0.1uF
L1
4.7uH
R27
12K
R28
2.2K
C18
22pF
C19
47uF
C20
0.1uF
CAN_L
CAN_H
VCC12V
CAN1
CAN2
VCC_IN
U6
RT9013-33GB
EN
VOUT
NC
C27
47uF
C25
0.1uF
C28
47uF
C26
0.1uF
R30
4.7K
3V3
J1
TJA1050
D
RS
CANH
CANL
Vref
C34
0.1uF
120R
R32
CAN3
SW1
R33
0R
R34
0R
UART1
U*2
R35
100K
C40
47uF
C39
0.1uF
C35
0.1uF
L2
4.7uH
R36
12K
R38
2.2K
C36
22pF
C37
47uF
C38
0.1uF
R37
4.7K
R39
4.7K
LED1
LED2
蓝色
PAD3.2
Title
Size
A4
Number
Revision
Date:
2020/12/6
Sheet
of
File:
E:\Hardware\..\press.SchDoc
Drawn By:

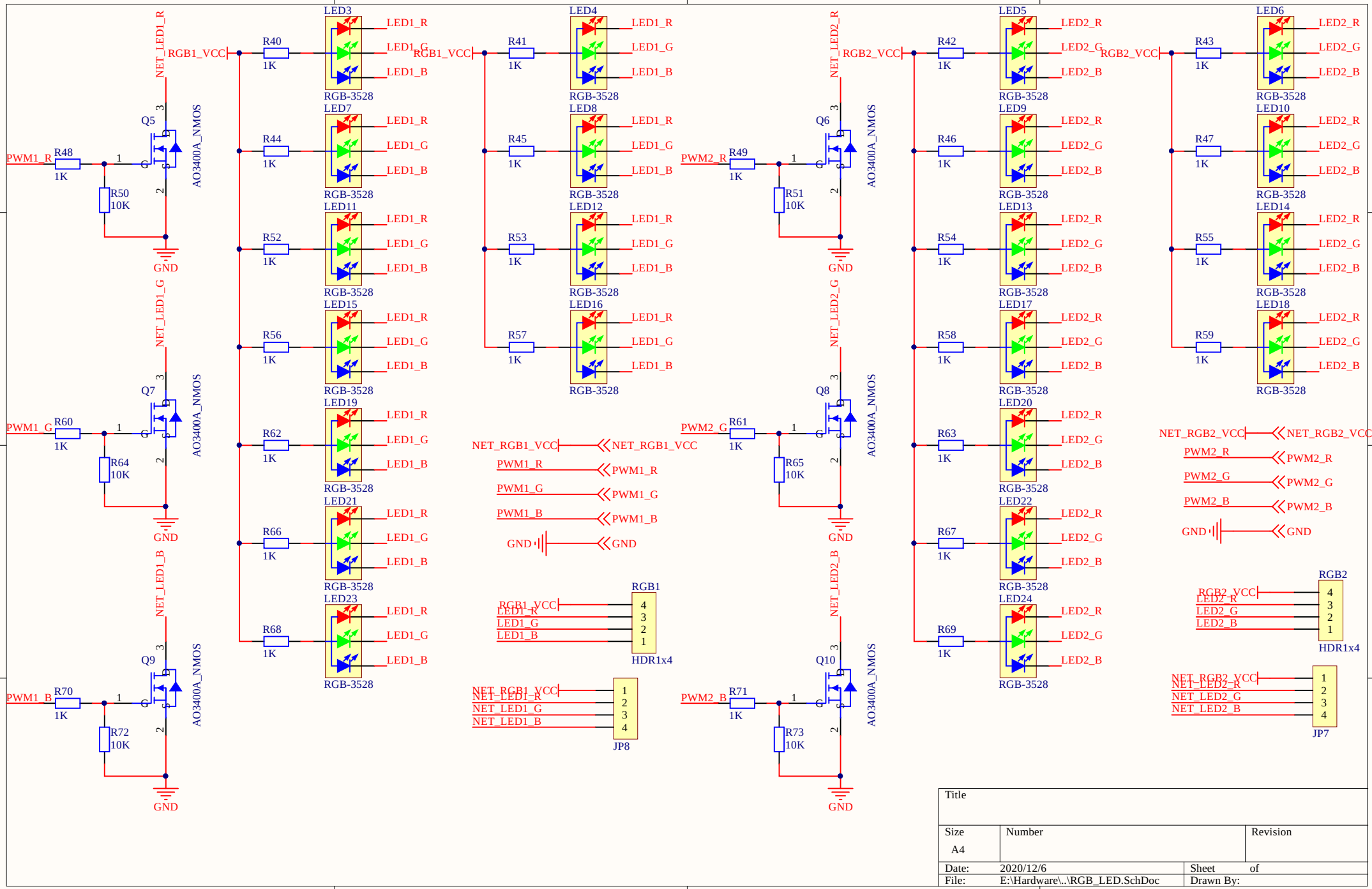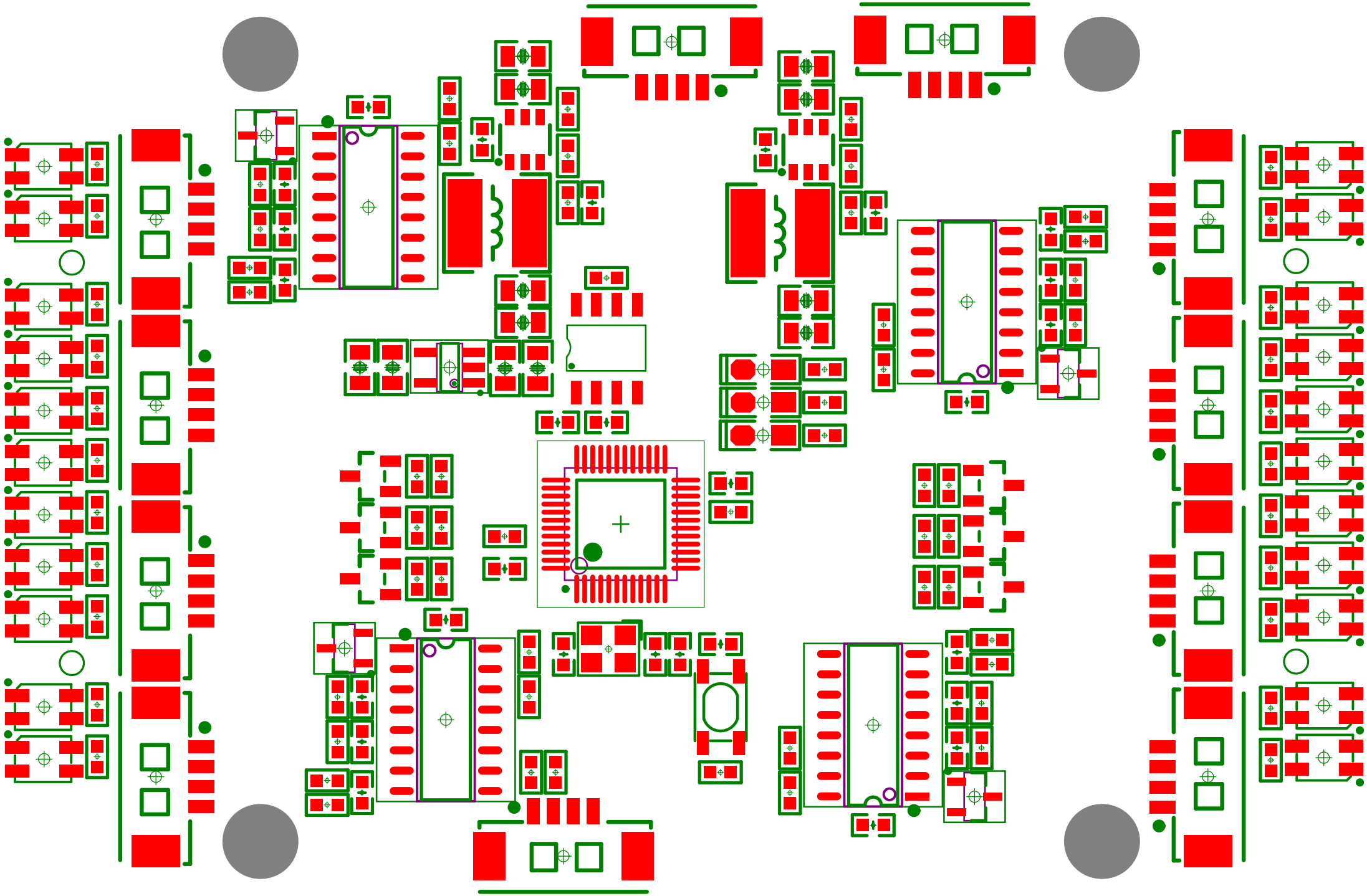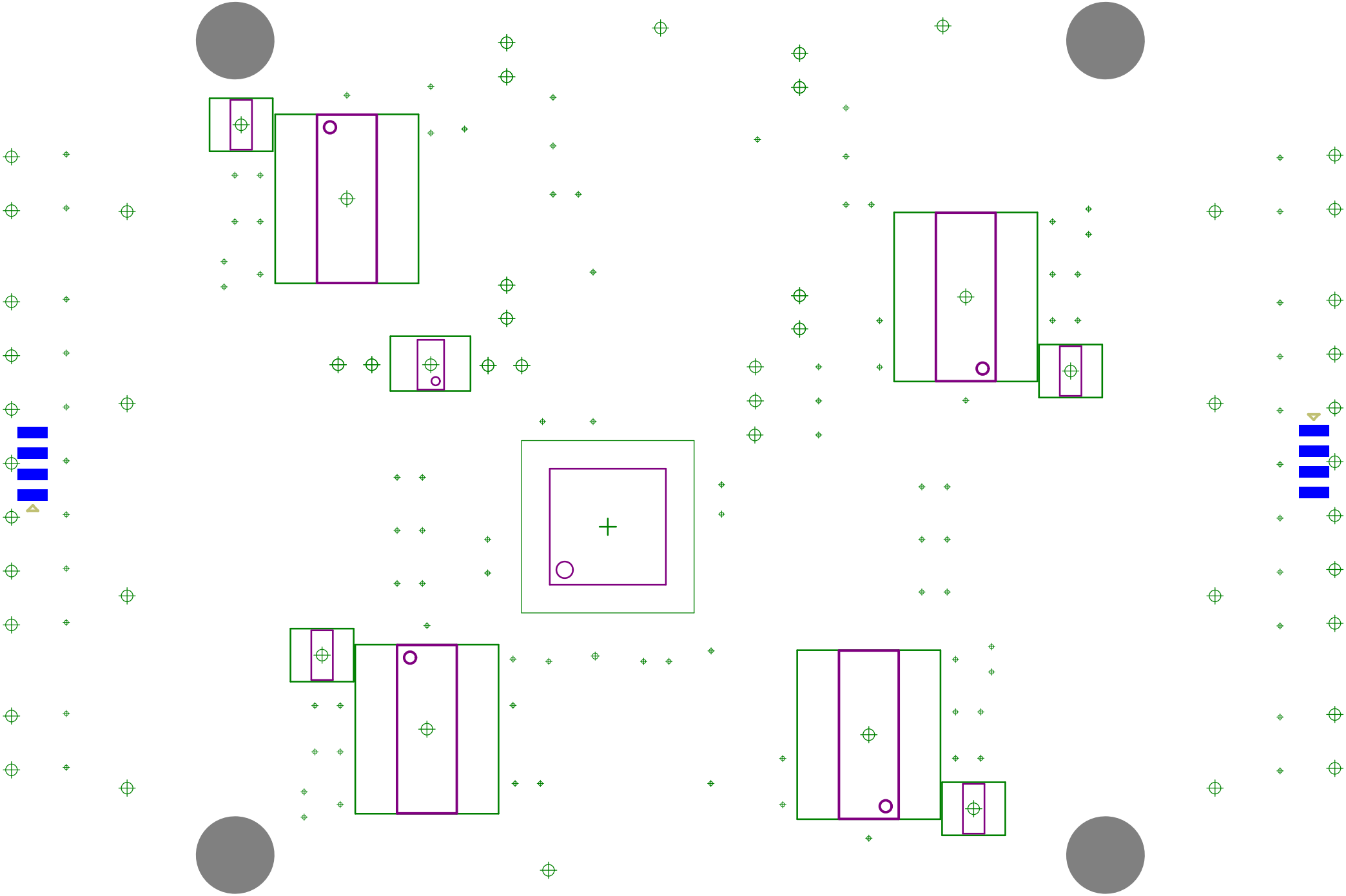
RGB1_VCC
RGB2_VCC
NET_LED1_R
NET_LED1_G
NET_LED1_B
NET_LED2_R
NET_LED2_G
NET_LED2_B
PWM1_R
PWM1_G
PWM1_B
PWM2_R
PWM2_G
PWM2_B
Q5
Q6
Q7
Q8
Q9
Q10
AO3400A_NMOS
R48 1K
R49 1K
R50 10K
R51 10K
R60 1K
R61 1K
R64 10K
R65 10K
R70 1K
R71 1K
R72 10K
R73 10K
GND
R40 1K
R41 1K
R42 1K
R43 1K
R44 1K
R45 1K
R46 1K
R47 1K
R52 1K
R53 1K
R54 1K
R55 1K
R56 1K
R57 1K
R58 1K
R59 1K
R62 1K
R63 1K
R66 1K
R67 1K
R68 1K
R69 1K
LED3
LED4
LED5
LED6
LED7
LED8
LED9
LED10
LED11
LED12
LED13
LED14
LED15
LED16
LED17
LED18
LED19
LED20
LED21
LED22
LED23
LED24
RGB-3528
LED1_R
LED1_G
LED1_B
LED2_R
LED2_G
LED2_B
NET_RGB1_VCC
NET_RGB2_VCC
RGB1
RGB2
HDR1x4
JP8
JP7
Title
Size
A4
Number
Revision
Date: 2020/12/6
Sheet of
File: E:\Hardware\..\RGB_LED.SchDoc
Drawn By: