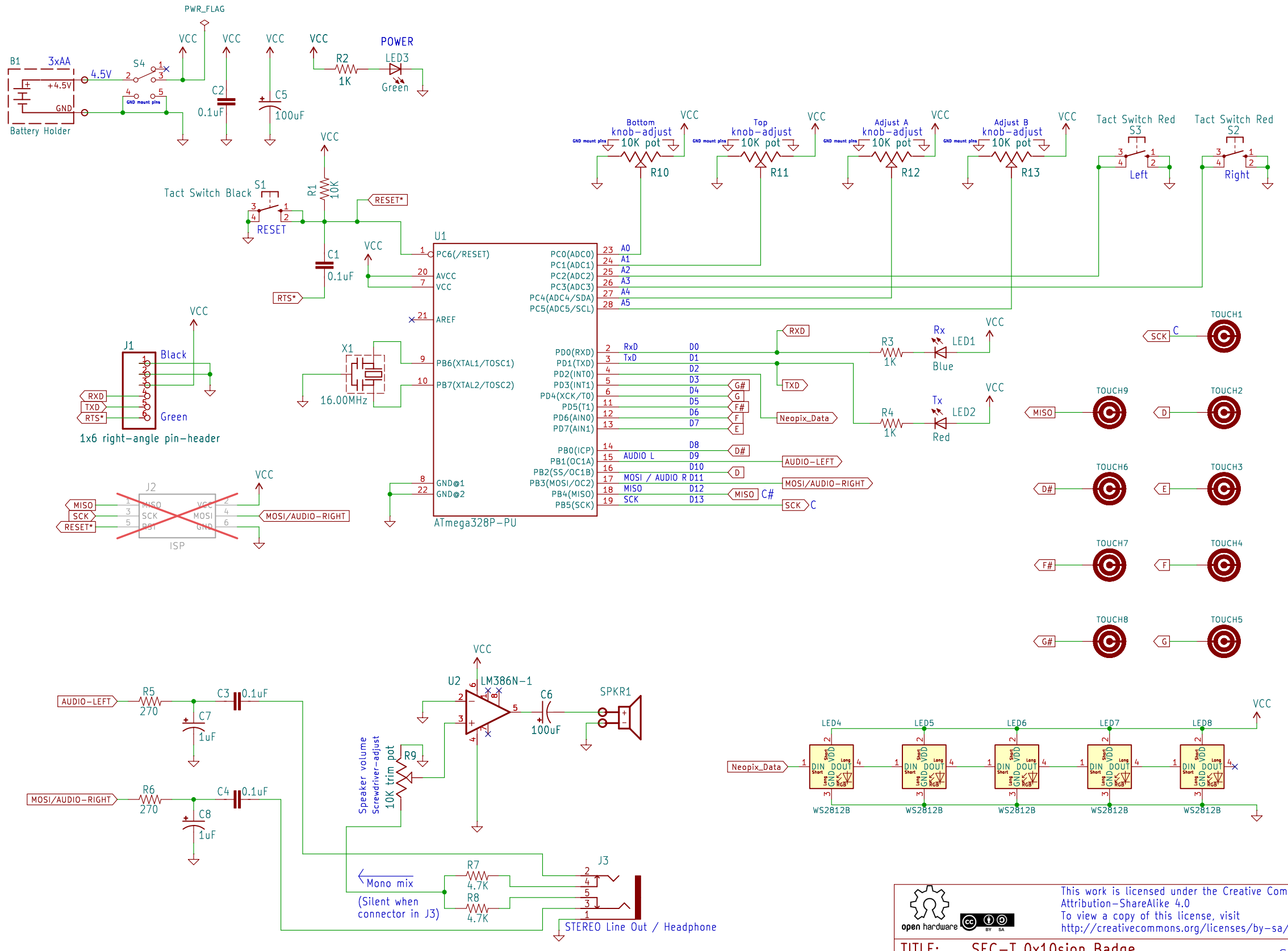

open hardware
This work is licensed under the Creative Commons
Attribution-ShareAlike 4.0
To view a copy of this license, visit
http://creativecommons.org/licenses/by-sa/4.0/

TITLE: SEC-T_0x10sion_Badge

Stereo

cornfield electronics Mitch Altman

Document Number:

modified from ArduTouch music synthesizer kit

REV: 0.2

Date: 2024-08-28

Sheet: 1/1

sec-t 0X10SION