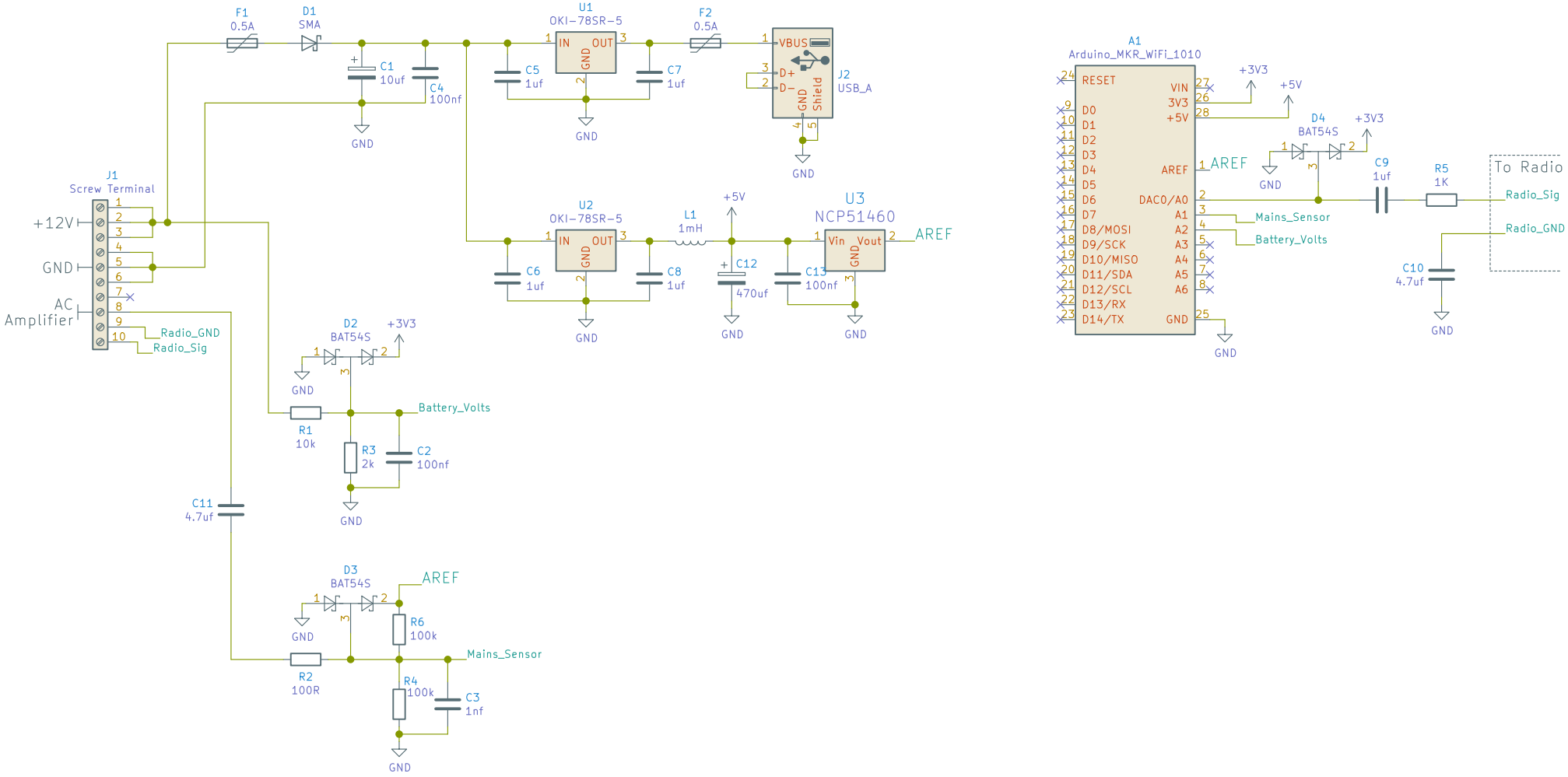

Erik Stefan
2020
CC BY-NC 3.0 AU

Sheet: /
File: remote-monitor.sch

Title: Repeater Monitor Main Board

Size: A4	Date: 18/10/20	**Rev:** 0.1
KiCad E.D.A. kicad (5.0.1)-4		Id: 1/1