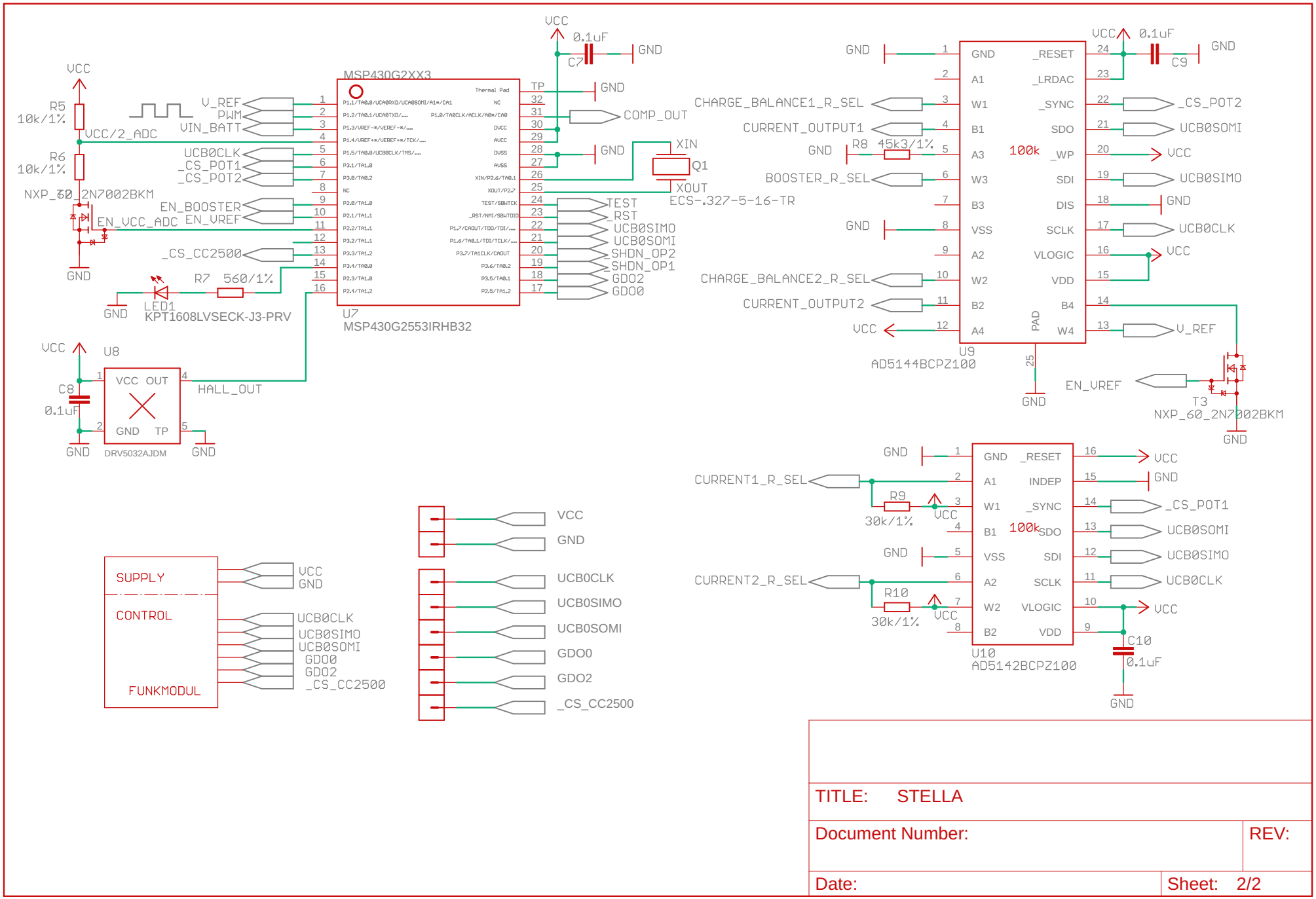

TITLE: STELLA

Document Number:

REV:

Date:

Sheet: 2/2

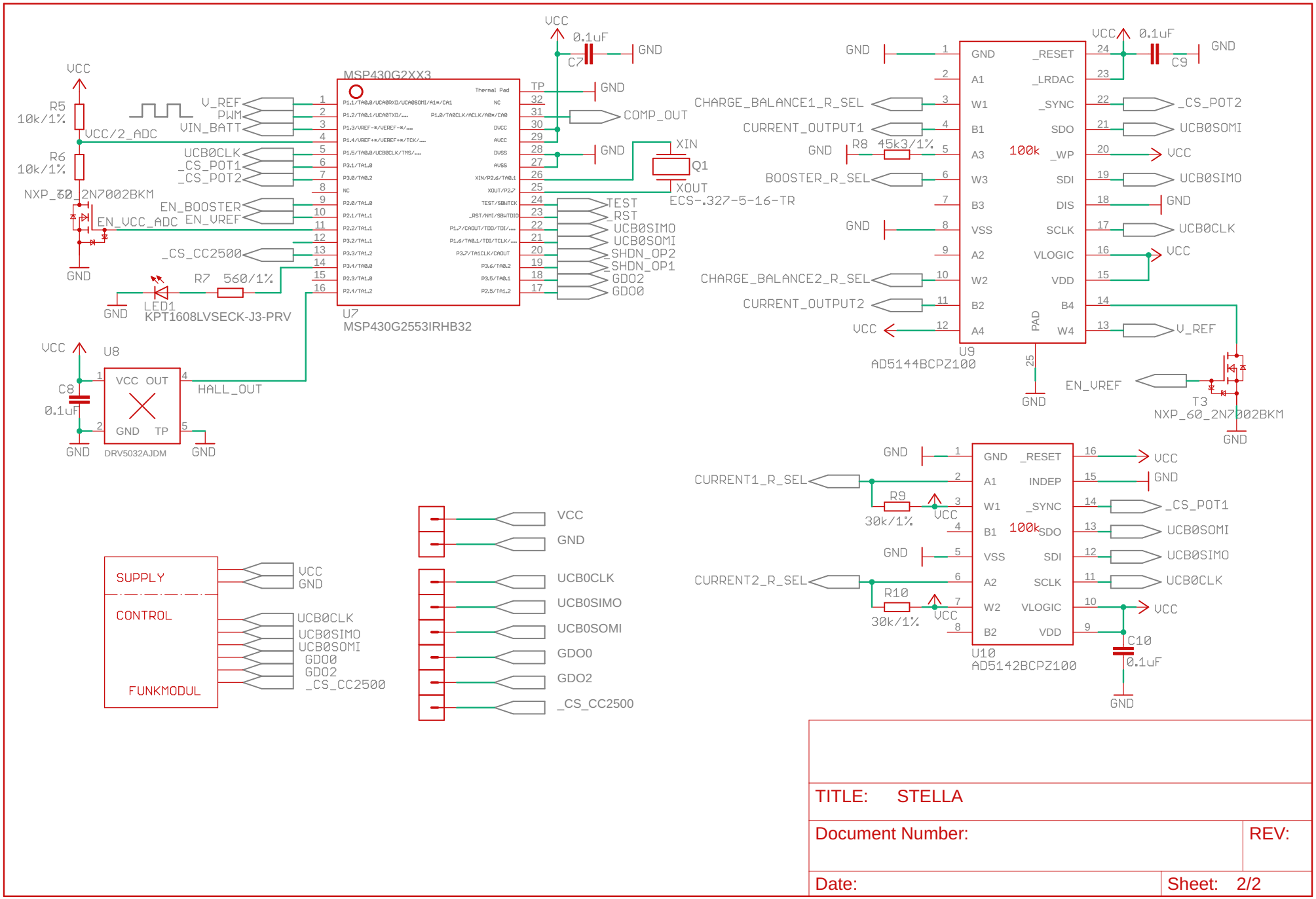

TITLE: STELLA

Document Number:

REV:

Date:

Sheet: 2/2