Max-Mean and Max-Median filters for detection of small-targets

Suyog D. Deshpande[a], M.H.Er[a], V. Ronda[b], Phillip Chan[c]

[a]Nanyang Technological University, School of EEE, Singapore 639798
[b]Centre for Signal Processing, Nanyang Technological University, Singapore 639 798
[c]Directorate of R & D, A Member of DTG, Singapore 109679

ABSTRACT

This paper deals with the problem of detection and tracking of low observable small-targets from a sequence of infrared images against structural background and non-stationary clutter. There are many algorithms reported in the open literature for detection and tracking of targets of significant size in the image plane with good results. However, the difficulties of detecting small-targets arise from the fact that they are not easily discernable from clutter. The focus of research in this area is to reduce the false alarm rate to an acceptable level. Triple Temporal Filter (TTF) reported by Jerry Silverman et. al., is one of the promising algorithms in this area. In this paper, we investigate the usefulness of **Max-Mean** and **Max-Median** filters in preserving the edges of clouds and structural backgrounds, which helps in detecting small-targets. Subsequently, anti-mean & anti-median operations result in good performance of detecting targets against moving clutter. The raw image is first filtered by max-mean/max-median filter. Then the filtered output is subtracted from the original image to enhance the potential targets. A thresholding step is incorporated in order to limit the number of potential target pixels. The threshold is obtained by using the statistics of the image. Finally, the thresholded images are accumulated so that the moving target forms a continuous trajectory and can be detected by using the post-processing algorithm. It is assumed that most of the targets occupy a couple of pixels. Head-on moving and maneuvering targets are not considered. These filters have been tested successfully with the available database and the results are presented.

Keywords: triple temporal filter, max-mean filter, max-median filter

1. INTRODUCTION

Detection and tracking of low observable small-targets from a sequence of infrared images against structural background and non-stationary clutter is an important research area particularly for Infrared Search and Track (IRST) surveillance applications. In these applications, the targets are assumed to be occupying one or two pixels in the image plane. The difficulties in detecting these small-targets arise from the fact that they are not easily discernable from the background clutter. Although many algorithms are reported in the open literature[1,2,3,4], none of them work well under all situations. Optimum linear, finite impulse filters have been developed for the detection of small-targets in homogeneous IR backgrounds[5]. The performance of these filters is degraded because of the non-stationary IR clutter. In such scenario, non-linear filters such as Median and Morphological have given satisfactory results[6,7]. Recent approaches use temporal filters for detecting very slow moving point-targets under heavy cloud clutter[8]. The Triple Temporal Filter (TTF) and the Continuous Wavelet Transforms are some of the promising approaches in this area[9,10,11].

In this paper, we investigate the usefulness of **Max-Mean** and **Max-Median** filters in preserving the edges of clouds and structural backgrounds, which helps in detecting small-targets. Subsequently, anti-mean & anti-median operations result in good performance of detecting targets against moving clutter. It is assumed that most of the targets occupy a couple of pixels. Head-on moving and maneuvering targets are not considered. These filters have been tested successfully with the available database and the results are presented.

Part of the SPIE Conference on Signal and Data Processing of Small Targets 1999
Denver, Colorado • July 1999
SPIE Vol. 3809 • 0277-786X/99/$10.00

Downloaded From: http://proceedings.spiedigitallibrary.org/ on 06/03/2013 Terms of Use: http://spiedl.org/terms

A brief description on edge preserving performance of the Max-Mean and Max-Median filters is given in section 2. The algorithm to detect small-targets from a sequence of IR images using Max-Mean and Max-Median filters is discussed in section 3. The simulation results are presented in section 4. Conclusions and the scope for future work are given in section 5.

2. MAX-MEAN & MAX-MEDIAN FILTERS

One of the most important tasks in image processing is noise filtering. It is difficult because the images are non-stationary two-dimensional processes and are often corrupted by additive, impulse and signal dependent noise. Since our visual perception is based on edge information, the noise filtering process must preserve edges. Linear techniques possess mathematical simplicity but have the disadvantages that they blur the edges. They also do not perform well in the presence of signal dependent noise. These disadvantages have led to the use of non-linear filtering in image processing. The median filtering approach was shown to be more computationally efficient and to preserve edges in information[12]. The performance of the nonlinear mean filters in the presence of edges, additive noise, impulse noise and signal dependent noise was evaluated[13]. They showed the usefulness of the nonlinear means in noise filtering while preserving the edge information. In this section, we give a short description on edge preserving performance of the max-mean and max-median filters and then show how these filters can be used for the detection of small-targets.

2.1 Max-Median Filter

Median filters are extensively used in multi-dimensional signal processing. The extension of one-dimensional filter to higher dimensions has not yielded satisfactory results. Although, noise suppression is obtained, many important features of interest are lost. The shortcomings of the median filters have motivated the study of generalizations of rank order smoother[12]. This gave the class of filters, which effectively removes out noise as well as preserves geometrical features of the signals and are called as Max-median filters. The one-dimensional non-recursive median filter for an odd number of samples can be obtained using

$$y(m) = median[x(m-N),...,x(m-1),x(m),x(m+1),...,x(m+N)] \tag{1}$$

where x is the input and y is the output of the median filter of window size $2N+1$. This filter removes the impulse noise and is computationally efficient. However, its performance is degraded when the dimensions are increased. Therefore, a class of max-median filter was developed to improve its performance. The approach of the max-median filter is that of estimating one-dimensional features embedded in a multidimensional space. The advantage of this approach is the preservation of the signal features that have lower dimensionality than the observation space, such as lines in two-dimensional space. In general, the max/ranked operation should choose the maximum operator with criteria to preserve the edges and discontinuities in the filtered signals. If other rank orders are chosen, it can be shown that the filter tends to blur the edge[12] in the original signal. The ranked operation can be median or any other point estimator. The output $y(m,n)$ of the $2N+1$ max-median filter is defined as

$$y(m,n) = \max[z_1, z_2, z_3, z_4] \tag{2}$$

where

$$\begin{aligned}
z_1 &= median(x(m,n-N),...,x(m,n),...x(m,n+N)) \\
z_2 &= median(x(m-N,n),...,x(m,n),...x(m+N,n)) \\
z_3 &= median(x(m+N,n-N),...,x(m,n),...x(m-N,n+N)) \\
z_4 &= median(x(m-N,n-N),...,x(m,n),...x(m+N,n+N))
\end{aligned}$$

Figure 1 shows the implementation of a max-median filter on a small window. The max-median filter of window size $2N+1$ spans over $8N+1$ sample points, and is moved from left to right and from top to bottom. A detailed mathematical

Downloaded From: http://proceedings.spiedigitallibrary.org/ on 06/03/2013 Terms of Use: http://spiedl.org/terms

analysis on the performance of these filters[12] show that the max-median filter is more efficient in filtering the noise while preserving the edge information when compared to the median filter. To visualize this, we have applied these filters to a real world image and the results are presented in Figure 2. Figure 2a & 2b shows an original and a noisy image. The original image consists of a structural background. The noise is additive and has a Gaussian distribution. Figures 2c & 2d show the output of the median and the max-median filters respectively. The size of the window used for filtering is 5 x 5. The result shows that the edge information in the original image is blurred in the median filtered image where as it is preserved to a certain extent in the max-median filtered image. It is also observed that the performance of the median filter is degraded with the increase in the window size. However, the edges in the max-median filtered images are not lost and the noise is more effectively reduced.

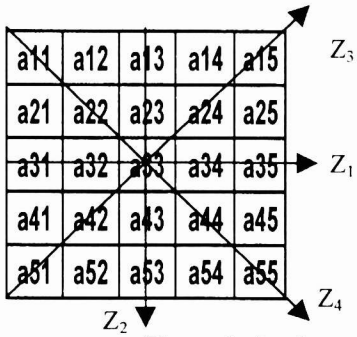

Z_1= median (a31, a32, a33, a34, a35)
Z_2= median (a13, a23, a33, a43, a53)
Z_3= median (a51, a42, a33, a24, a15)
Z_4= median (a11, a22, a33, a44, a55)

Figure 1: Implementation of the Max-Median filter.

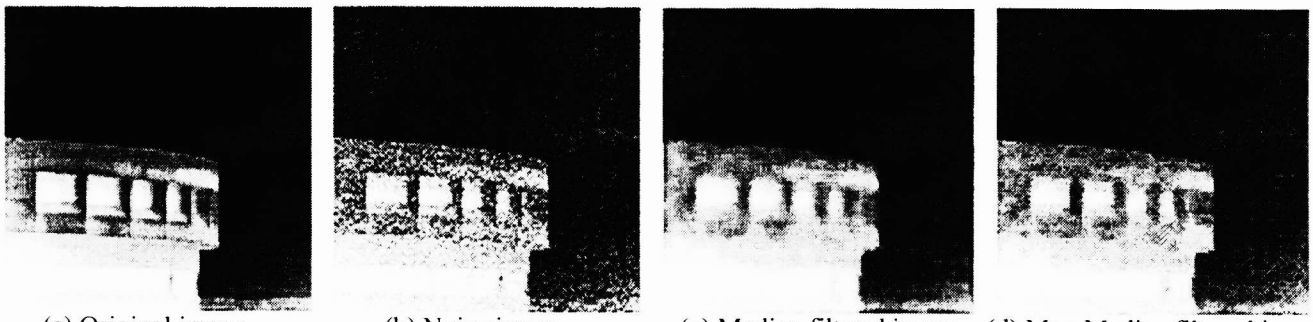

(a) Original image (b) Noisy image (c) Median filtered image (d) Max-Median filtered image

Figure 2: Edge preserving performance of the median and max-median filters.

2.2 Max-Mean Filter

Another class of ranked operation is the mean estimator. The max-median filter can be changed to max-mean filter by replacing the median operation with the mean operation. The output of the max-mean filter is given by

$$y(m,n) = \max[z_1, z_2, z_3, z_4] \tag{3}$$

where

$$z_1 = mean(x(m, n-N), \ldots, x(m,n), \ldots x(m, n+N))$$
$$z_2 = mean(x(m-N, n), \ldots, x(m,n), \ldots x(m+N, n))$$
$$z_3 = mean(x(m+N, n-N), \ldots, x(m,n), \ldots x(m-N, n+N))$$
$$z_4 = mean(x(m-N, n-N), \ldots, x(m,n), \ldots x(m+N, n+N))$$

Downloaded From: http://proceedings.spiedigitallibrary.org/ on 06/03/2013 Terms of Use: http://spiedl.org/terms

The variance of the output of the mean filtered image[13] y is given by

$$\sigma_y^2 = \frac{1}{N^2}\left[\sum_{i=1}^{N}\sigma_{x_i}^2 + 2\sum_{i=1}^{N}\sum_{j=1}^{N}R_{11}(i,j)\right] \tag{4}$$

where $\sigma_{x_i}^2$ is the variance of the input signal, N is the size of the window on which the filter is applied, and $R_{11}(i,j)$ represents the second order statistics. From the above equation it can be clearly seen that the variance of the output signal is dependent on the size of the window and the variance of the input signal. In the region of high variance (presence of an edge), the mean filter tends to blur the edge. As the value of N increases, the variance of the output signal becomes smaller and smaller when compared to that of input signal, which indicates more blurring of the edge information. But this property can be used in suppressing the spikes (isolated points) in the signal. The more the value of N, the more is the spike suppression. In general, N must be large for spike suppression and must be small for preserving the edge information.

Therefore, we can use this filter to detect small-targets from a sequence of IR images. The filter should perform the following tasks

- To enhance the isolated points because the small-targets are assumed to occupy a single pixel in the image plane. This can be done by suppressing the isolated points by using a max-mean filter and then subtracting the filtered image from the original image to enhance them.
- To preserve the edge information (cloud edges and structural background). If these edges are preserved they can be removed from the original image by applying anti max-mean operation.
- To give a weak response in the homogeneous regions.

2.2.1 Optimal value of N for suppressing spikes

Let the mean of the background signal is m and the spikes have a mean of $bm\ (b >> 1)$. Let the length of the filter is N and the number of spikes (potential targets) in N samples are k. Let $x_i = bm$ represents a spike and $x_i = m$ represents a pixel corresponding to the background. The spike can be successfully suppressed if the expected value of the output of the mean filter i.e., the intensity of the pixel corresponding to a spike is reduced to the intensity of the background pixel.

$$E\{|y|\} \le am \tag{5}$$

where $a = 1 + \in \ \& \ \in > 0$. For a positive spike,

$$y = bmk + m(N-k) \tag{6}$$

where N represents the total number of pixels, k are the number of spikes and $N-k$ are the number of pixels corresponding to the background. Therefore, the probability of occurrence of a spike is $\frac{k}{N}$ and that of background pixel is $\frac{N-k}{N}$. The expected value of y is given by

$$E\{|y|\} = \frac{bmk}{N} + \frac{m(N-k)}{N} \tag{7}$$

Downloaded From: http://proceedings.spiedigitallibrary.org/ on 06/03/2013 Terms of Use: http://spiedl.org/terms

Considering equation 5 we get,

$$\frac{bmk}{N} + \frac{m(N-k)}{N} \leq am$$

$$N \geq \frac{k(b-1)}{(a-1)} \tag{8}$$

From the above expression it can be seen that the value of N must be large in order to suppress the spikes successfully. As $N \rightarrow \infty$ the spike suppression performance of the max-mean filter approaches the median filter.

2.2.2 Effect of N on edge information

Let the anti mean filter output is defined by

$$z(m,n) = x(m,n) - \frac{1}{N^2} \sum_{m=-\overline{N}}^{\overline{N}} \sum_{n=-\overline{N}}^{\overline{N}} x(m,n) \tag{9}$$

where x is the input image and $\overline{N} = \frac{N-1}{2}$.

Let $x(m,n) = b + h$ represents an edge and $x(m,n) = b$ is the background pixel and the total number of edge pixels is k. Therefore,

$$z(m,n) = x(m,n) - \left[b + \frac{hk}{N^2} \right] \tag{10}$$

From the above equation it is seen that $k = 0$ represents a homogeneous region and the output becomes

$$z(m,n) = b - \left[b + \frac{h*0}{N^2} \right] = 0$$

$k = 1$ represents a spike in N^2 samples and the output becomes

$$z(m,n) = h(1 - \frac{1}{N^2})$$

The spike is retained only if N is large. Let $k = N$ represents the presence of an edge in one of the four directions. The output is given by

$$z(m,n) = h(1 - \frac{1}{N}) > 0 \tag{11}$$

Therefore, the arithmetic mean filter is not capable of preserving the edge information efficiently. Instead if the max-mean filter (applying one dimensional arithmetic mean filter in four possible directions) is used then the noise can be filtered while preserving the edges. The anti max-mean filter output is given by

$$z(m,n) = x(m,n) - \max[x_1, x_2, x_3, x_4]$$

Downloaded From: http://proceedings.spiedigitallibrary.org/ on 06/03/2013 Terms of Use: http://spiedl.org/terms

$x_{l}, l=1,2,3,4$ is the arithmetic mean in one of the four directions. Let there is an edge along horizontal direction such that $x_1 = b + \frac{hk}{N}$, $x_2 = b + \frac{h}{N}$, $x_3 = b + \frac{h}{N}$, $x_4 = b + \frac{h}{N}$ and the total number of edge pixels are N. Then the output of the anti max-mean filter becomes

$$z(m,n) = b + h - (b + \frac{hN}{N}) = 0 \tag{12}$$

Thus we can see that the max-mean filter preserves the edge information more efficiently when compared to the mean filter and if the value of N is large enough then its spike suppression performance approaches the median filter. The outputs of these filters when applied to a real world image are similar to Figure 2 but with more blurring. The performance of the max-mean filter is superior when compared to that of the mean filter.

In the previous subsections, we have shown the edge preserving and spike suppression capability of the max-median and max-mean filters. These features can be used for the detection of small-targets against structural background and non-stationary clutter. As the small-targets occupy a single pixel in the image plane, they can be assumed to be spikes in the image. Thus, these filters can be used to suppress the isolated points and also to preserve the edges that are formed by the slowly moving clouds.

We thus investigated the use of Max-Median and Max-Mean filters for small-target detection and the results obtained are satisfactory. In the section to follow, we present the algorithm that uses max-median and max-mean filters to extract the small-targets by suppressing the background clutter. It is based on max-median and max-mean subtraction filters, adaptive threshold for each pixel, accumulation of the thresholded images and processing of the accumulated image to obtain the final target trajectories.

3. TARGET DETECTION ALGORITHM

The raw image is first filtered to get an estimate of the background clutter by suppressing the isolated points. Then the filtered image is subtracted from the original image to enhance the potential targets. A thresholding step is incorporated in order to limit the number of potential target candidates. The threshold is obtained by using the statistics of the subtracted image. Finally, the thresholded images are accumulated so that the moving target forms a continuous trajectory and can be detected by using the post-processing algorithm. The functional block diagram of the target detection algorithm is given in Figure 3, which is self-explanatory. The various steps of the target detection algorithm are as follows.

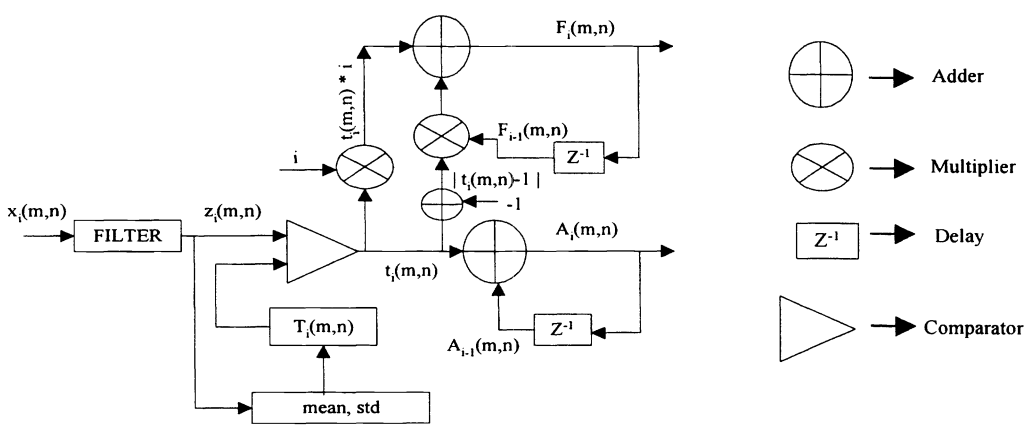

Figure 3: Functional block diagram of the target detection algorithm.

Downloaded From: http://proceedings.spiedigitallibrary.org/ on 06/03/2013 Terms of Use: http://spiedl.org/terms

(a) Get a new image frame $x_i(m,n)$, i is the frame number.

(b) Apply max-median or max-mean filter on the image. The filtered output $y_i(m,n)$ can be obtained by using equations 2 or 3. These filters suppress the isolated points, which may or may not be a real target and forms an estimate of the background clutter.

$$y_i(m,n) = \max[z_1, z_2, z_3, z_4]$$

where $[z_1, z_2, z_3, z_4]$ are the outputs of the ranked operation, which is either mean or median.

(c) A large amount of background clutter can be removed from the image by subtracting the max-median/max-mean filtered output from the original image.

$$z_i(m,n) = x_i(m,n) - y_i(m,n)$$

(d) The subtracted image is then subjected to thresholding. The threshold is based on the statistics of the subtracted image. The thresholded image $t_i(m,n)$ is given by

$$t_i(m,n) = \begin{cases} 1 & z_i(m,n) \geq T_i(m,n) \\ 0 & z_i(m,n) < T_i(m,n) \end{cases}$$

$T_i(m,n)$ is the threshold corresponding to the pixel (m,n) of ith frame and is given by

$$T_i(m,n) = \mu_i(m,n) + k\sigma_i(m,n)$$

where $\mu_i(m,n)$ & $\sigma_i(m,n)$ are the mean and the standard deviation computed over a small window around the pixel (m,n) and the constant k depends on the probability of false alarm[1].

(e) The thresholded images are then accumulated. The accumulated image $A_i(m,n)$ is updated using

$$A_i(m,n) = A_{i-1}(m,n) + t_i(m,n)$$

(f) The frame information for every pixel detected is stored as follows

$$F_i(m,n) = F_{i-1}(m,n) * |t_i(m,n) - 1| + t_i(m,n) * i$$

(g) After processing N frames, the final target trajectories are obtained by checking for their continuity in the accumulated image. The post-processing algorithm uses the accumulated image $A(m,n)$ and frame information $F(m,n)$ to detect the potential targets.

The above algorithm was tested on a number of real-world infrared image sequences and the results are presented in the following section.

Downloaded From: http://proceedings.spiedigitallibrary.org/ on 06/03/2013 Terms of Use: http://spiedl.org/terms

4. SIMULATION RESULTS

The detection algorithm, which is based on max-median/max-mean filters, is applied to real world infrared sequences containing slow moving targets with different focal plane velocities. The image sequences are obtained from Air Force Rome Laboratory, USA[14]. The sequences were captured using infrared camera with a 244 x 320 focal plane array. The image data from the camera was captured to 12-bit precision at 30 frames per second. We used 95 consecutive frames to evaluate the performance of the detection algorithm. The output of these filters is compared with the triple temporal filter[10,11].

4.1 Sequence #1: Two targets in wispy clouds

This sequence consists of two small-targets moving with sub-pixel focal plane velocities. It also contains slowly moving high intensity clouds and relatively clear sky. A single frame from the original image is shown in Figure 4a. It is very difficult to locate the two targets from the single frame. Figures 4b & 4c shows the accumulated images obtained by using the max-median and max-mean filters respectively. The two targets form a continuous trajectory in the accumulated image. Hence, a post-processing algorithm is applied to these images in order to detect them. The post-processing algorithm processes the accumulated images along with the frame information, which stores the occurrence of non-zero pixels after processing each frame. The final output is shown in Figures 4d & 4e. The output of the triple temporal filter (TTF) [10,11] is shown in Figure 4f. It can be seen that both the filters are able to detect the true target trajectories without any false alarms and the results are comparable to the TTF output.

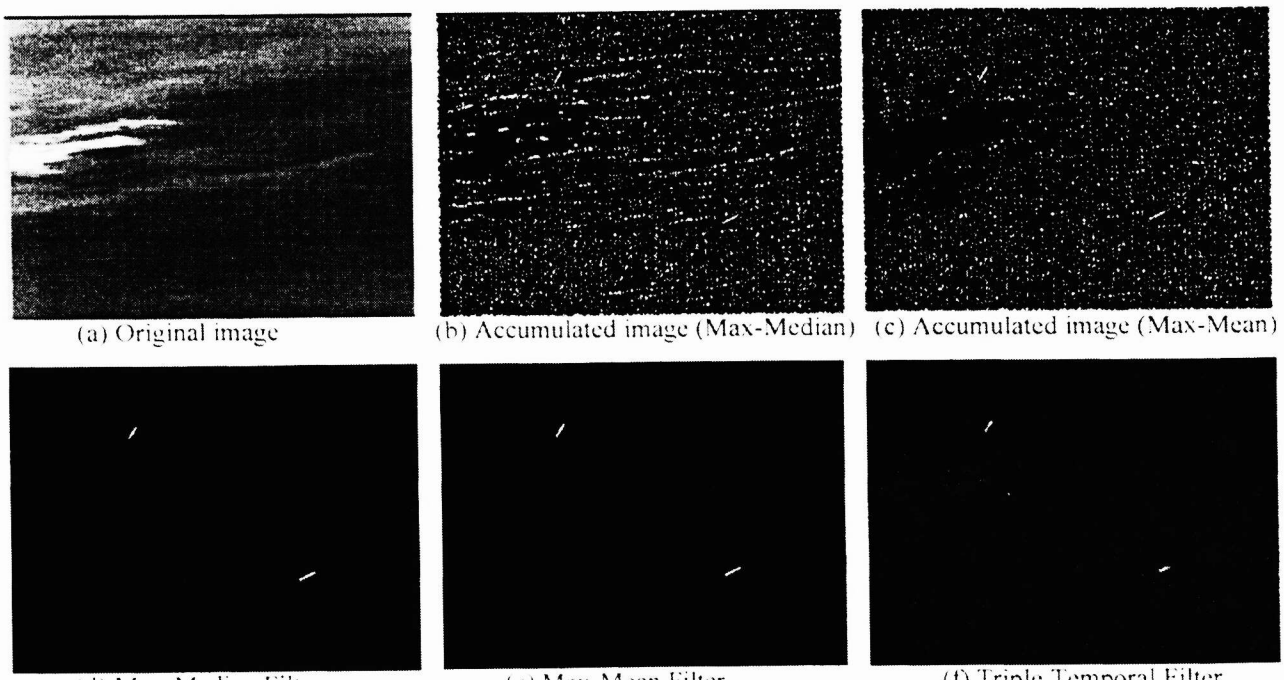

(a) Original image (b) Accumulated image (Max-Median) (c) Accumulated image (Max-Mean)

(d) Max-Median Filter (e) Max-Mean Filter (f) Triple Temporal Filter

Figure 4. Original image frame and the outputs of the three algorithms (Sequence #1)

4.2 Sequence #2: Two targets in fluffy clouds

This sequence consists of two slow moving targets in heavy cloud clutter. The original image frame is shown in Figure 5a. It can be seen that this sequence is much more cluttered when compared to sequence #1. The accumulated images obtained by using the two filters are shown in Figures 5b & 5c. These filters suppress most of the cloud edges, which can be seen in the accumulated images. The outputs of the post-processing algorithm are shown in Figures 5d & 5e. The results show that these

Downloaded From: http://proceedings.spiedigitallibrary.org/ on 06/03/2013 Terms of Use: http://spiedl.org/terms

filters are not able to detect one of the targets, which is in front of the clouds and also there is a discontinuity in the trajectory of the second target. This is because the intensity of the target pixel is less (comparable to the background clutter) in few frames in the sequence. In such cases, the size of the window must be large to enhance these pixels, which in turn requires more computational power. Not only the window size but also the threshold plays an important role in detecting small-targets. Therefore, the detection performance of the max-mean and max-median filters depends on the selection of window size, which has to be obtained from the scene statistics.

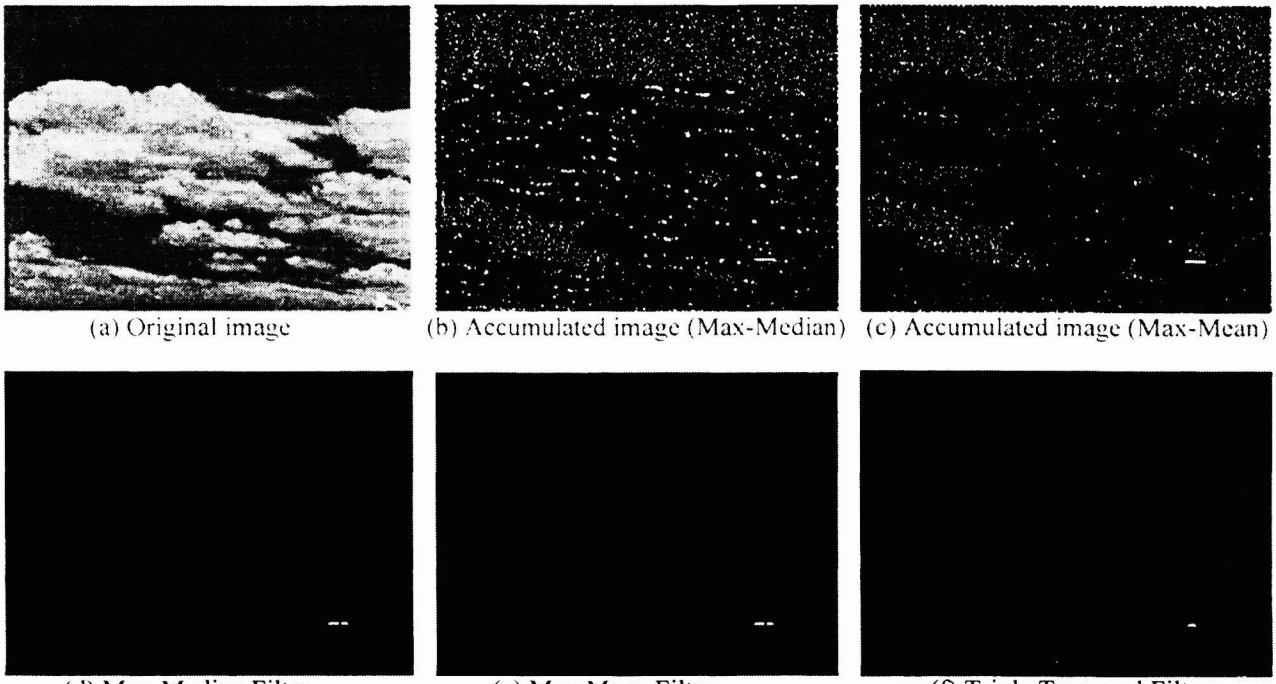

(a) Original image (b) Accumulated image (Max-Median) (c) Accumulated image (Max-Mean)

(d) Max-Median Filter (e) Max-Mean Filter (f) Triple Temporal Filter

Figure 6. Original image frame and the outputs of the three algorithms (Sequence #2)

5. CONCLUSIONS

In this paper, we investigated the usefulness of the max-mean and max-median filters for the detection of small-targets from a sequence of infrared images against slowly moving clouds. We first gave a brief description on the edge preserving and noise filtering performance of these filters and then showed how these filters can be used for small-target detection. The detection algorithm is based on max-median and max-mean subtraction filters, adaptive threshold for each pixel, accumulation of the residue image and processing of the accumulated image to obtain the final target trajectories. It has been tested on a number of real world image sequences and the results obtained are satisfactory.

5.1 Scope for future work

The future work would be concentrated on the theoretical analysis of max-mean and max-median filters followed by developing an efficient post-processing algorithm to cater for wide range of target intensities & velocities. It is yet to be analyzed whether max-median filter has any functional advantage compared to max-mean filter, which has computational advantage. It would also include temporal processing of each pixel instead of applying spatial filters. Also, the developed algorithm will be tested on a large database in order to validate the results.

Downloaded From: http://proceedings.spiedigitallibrary.org/ on 06/03/2013 Terms of Use: http://spiedl.org/terms

REFERENCES

[1] Ji Shu-Long, Zhou Liang-Zhu, Sun Zhong-Kong, and Chen Yui-Bo, "A New Method for Point-Target detection in Infrared Imagery," *IEEE National Aerospace Electronics Conference*, Vol. 1, 1992, pp. 250 - 253.

[2] Ren-Jean Liou, Mohmood R. Azimi-Sadjadi, "Dim Target Detection Using High Order Correlation Method," *IEEE Trans. on AES,* Vol. 29, No. 3, July 1993, pp. 841 - 856.

[3] Zhi-Yong Li, Zhen-Kang Shen, "Dim Point Target Detecting From Image Sequences," *SPIE Signal and Data Processing of Small Targets,* Vol. 2235, 1994, pp. 249 - 257.

[4] Wei-ping Yang, Zhen-Kang Shen, Zhi-Yong Li, "Application of Difference Method to Dim Point Target Detection in Infrared Images," *SPIE Signal and Data Processing of Small Targets*, Vol. 2235, 1994, pp. 258 - 263.

[5] David S. K. Chan, David A. Langan, and Daniel A. Staver, "Spatial processing techniques for the detection of small targets in IR clutter," *SPIE Signal and Data Processing of Small Targets,* Vol. 1305, 1990, pp. 53 – 62.

[6] John T. Barnett, Barton D. Billiard, Changta Lee, "Nonlinear morphological processors for point-target detection versus an adaptive linear spatial filter: a performance comparison," *SPIE Signal and Data Processing of Small Targets,* Vol. 1954, 1993, pp. 12 - 24.

[7] Victor T. Tom, Tamar Peli, May Leung, Joseph E. Bondaryk, "Morphology-based algorithms for point target detection in infrared backgrounds," *SPIE Signal and Data Processing of Small Targets,* Vol. 1954, 1993, pp. 2 - 11.

[8] D. J. Gregoris, S. K. W. Yu, S. Tritchew, "Detection of dim targets in FLIR imagery using multiscale transforms," *SPIE Infrared Technology XX,* Vol. 2269, 1994, pp. 62 - 71.

[9] Alexis P. Tzannes and Dana H. Brooks, "Temporal filters for point target detection in IR imagery," *SPIE Infrared Technology and Applications XXIII,* Vol. 3061, 1997, pp. 508 - 520.

[10] Jerry Silverman, Jonathan M. Mooney and Charlene E. Caefar, "Tracking point targets in cloud clutter," *SPIE Infrared Technology and Applications XXIII,* Vol. 3061, 1997, pp. 496 - 507.

[11] C. E. Caefer, J. Silverman, J. M. Mooney, "Temporal filtering for point target detection in staring IR imagery part I: damped sinusoid filters", *SPIE Vol. 3373, Signal and Data Processing of Small Targets*, 1998, paper no. 3373-14.

[12] GONZALO R. ARCE, MICHAEL P. McLOUGHLIN, "Theoretical Analysis of the Max/Median Filter", *IEEE Transactions on ASSP*, Vol. ASSP-35, No. 1, January 1987, pp. 60 – 69.

[13] IOANNIS PITAS, ANASTASIOS N. VENETSANOPOULOS, "Nonlinear Mean Filters in Image Processing", *IEEE Transactions on ASSP,* Vol. ASSP – 34, No. 3, June 1986, pp. 573 – 584.

[14] FTP DIRECTORY: ftp://max.rl.plh.af.mil

Downloaded From: http://proceedings.spiedigitallibrary.org/ on 06/03/2013 Terms of Use: http://spiedl.org/terms