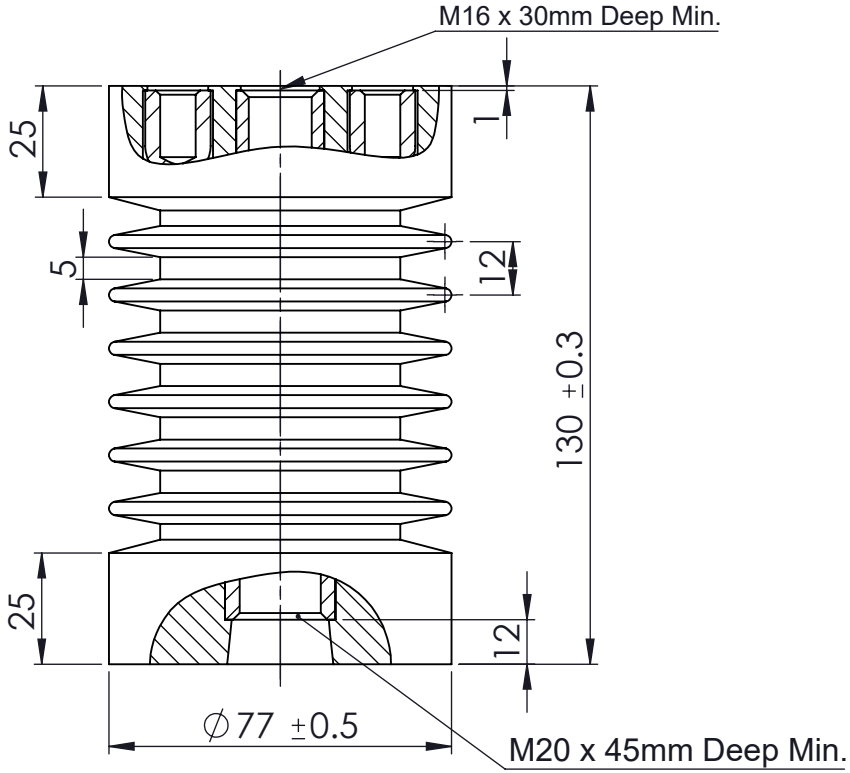

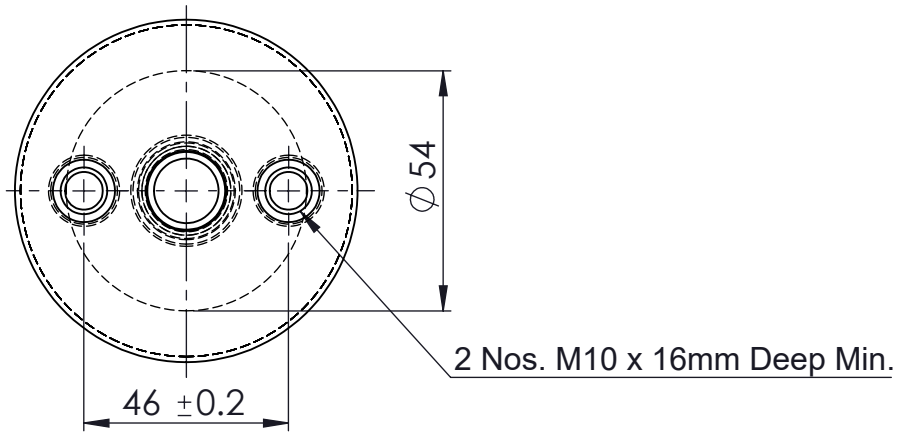

ELECTRICAL SPECIFICATION IS:9431-1979

1) Rated Voltage.....11 kV.
2) Dry Power Frequency Withstand Voltage Test (One Minute).....35 kV.
3) Dry Lightning Impulse Withstand Voltage Test .....75 kVpeak.
4) Minimum Creepage Distance.....250 mm.

MECHANICAL SPECIFICATION IS:9431-1979

1) Cantilever Failing Load F.....1000 Kgs.
2) Compression Failing Load .....10000 Kgs.
3) Tensile Failing Load .....2000 Kgs

OTHER :-

1) Colour brick red.

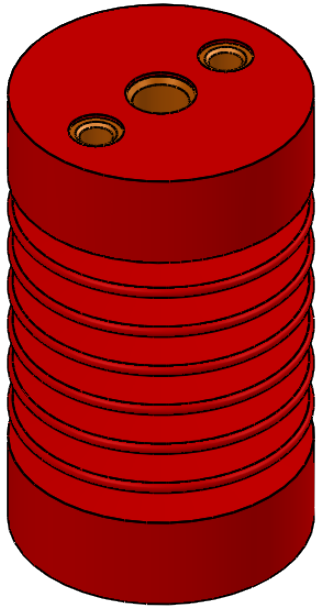

THE COPYRIGHT OF THESE DRAWINGS AND OF ALL ANNEXES WHITCH ARE ENTRUSTED TO A PERSON'S CARE ALWAYS REMAIN THE PROPERTY OF OUR FIRM. THEY MUST NOT BE COPIED OR DUPLICATED.NOT SHOWN TO OR PLACED AT THE DISPOSAL OF THIRD PERSONS WITHOUT OUR WRITTEN CONSENT.

REV.	MODIFICATION	DATE	APPD

11kV Epoxy Insulator

MANUFACTURER
SUNSHINE ENGINEERING
Email :- sunshineengineering23@gmail.com
Mob. :- +91 7499544230

All dimensions are in mm

SCALE	NTS	REF. H-0008	
DRG	UKN	PROJECTION	
CHD	Pitale		
APPD	Pitale	Drawing No.	Rev.
DATE	10/04/22	SE/EI11/003	