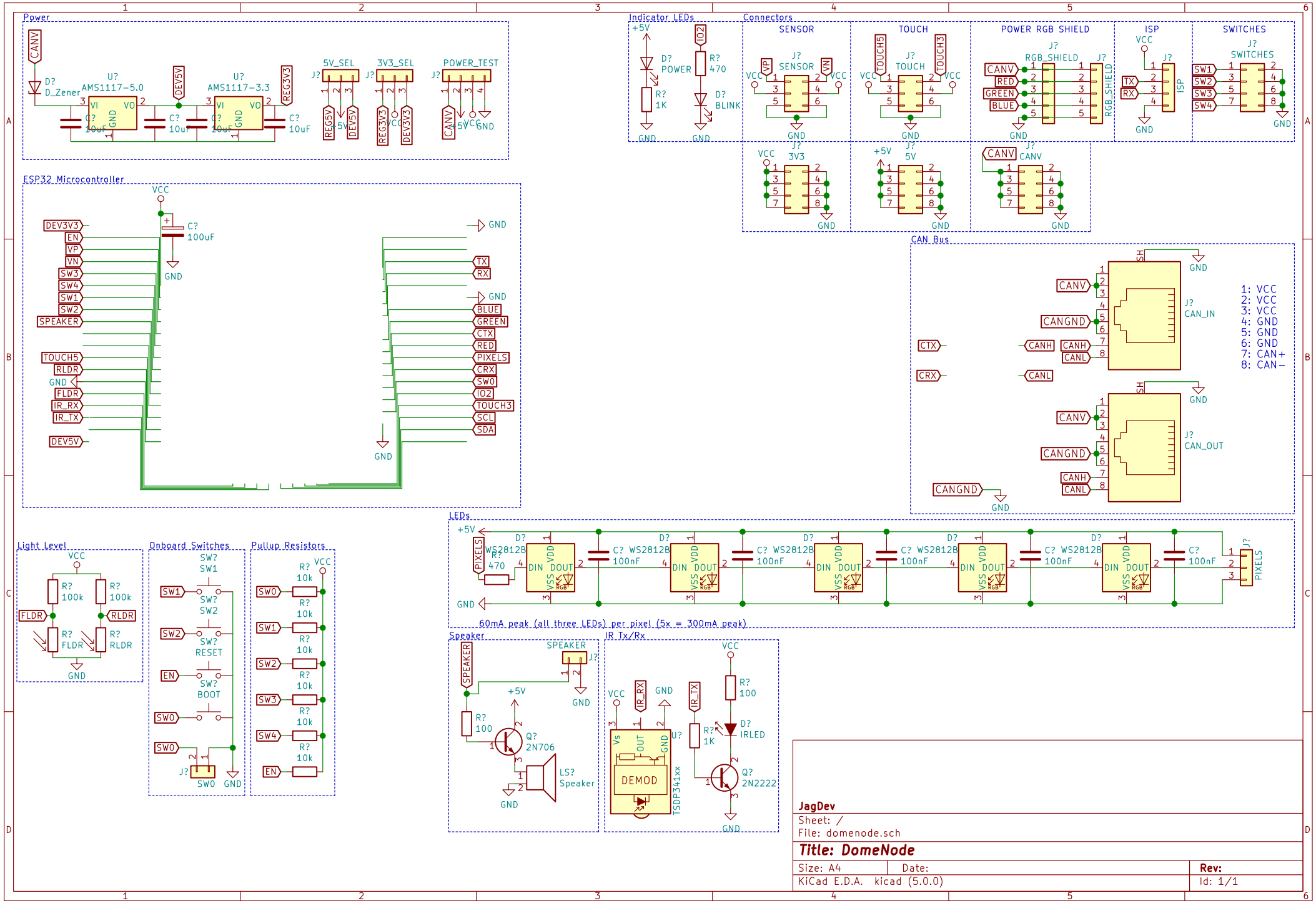

JagDev	
Sheet: /	
File: domenode.sch	
Title: DomeNode	
Size: A4	Date:
KiCad E.D.A. kicad (5.0.0)	Rev: Id: 1/1