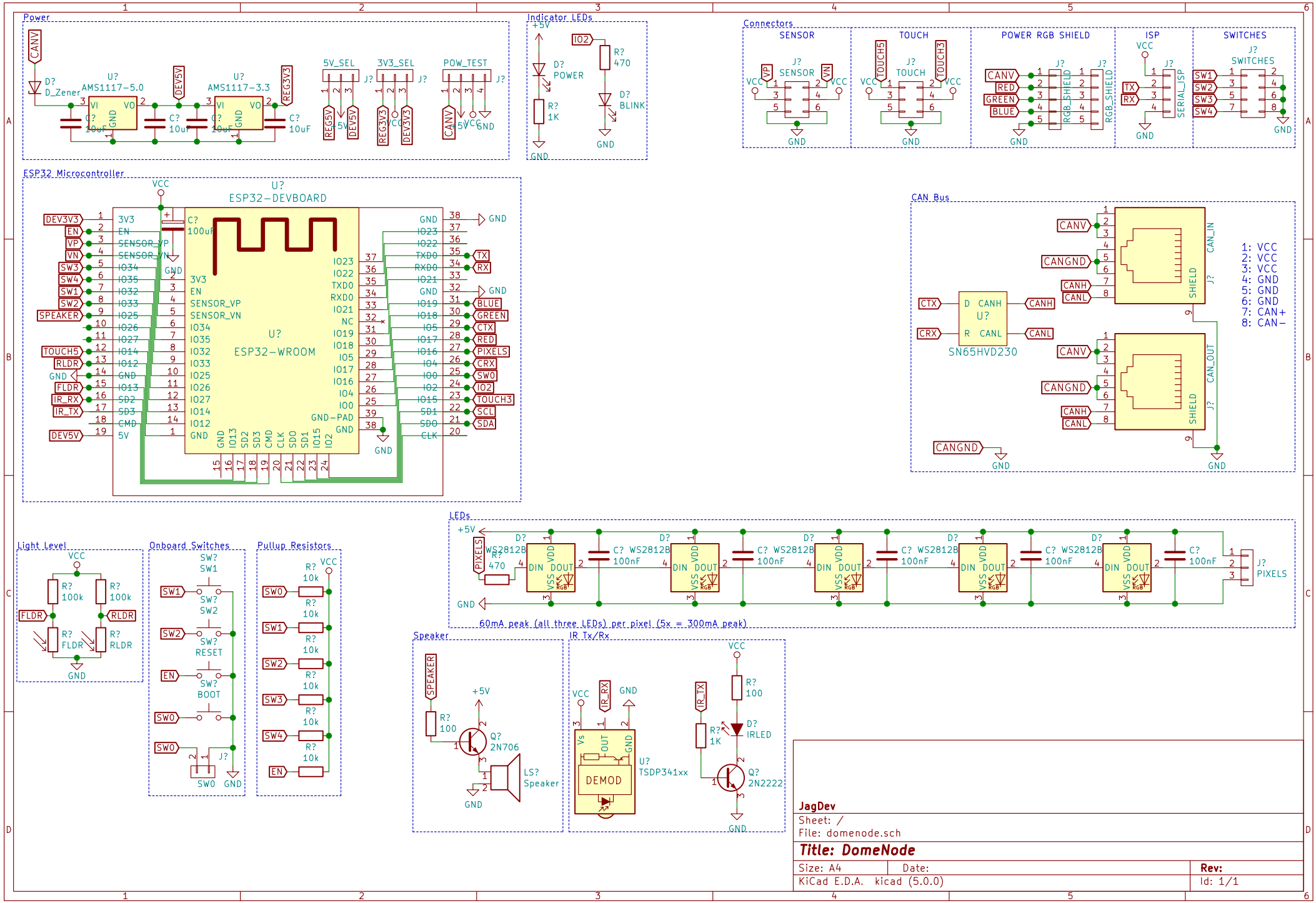
Power
CANV
D? D_Zener
U? AMS1117-5.0
U? AMS1117-3.3
DEV5V
REG3V3
C? 10uF
5V_SEL
3V3_SEL
POW_TEST
Indicator LEDs
+5V
D? POWER
R? 1K
IO2
R? 470
D? BLINK
GND
Connectors
SENSOR
TOUCH
POWER RGB SHIELD
ISP
SWITCHES
J? SENSOR
J? TOUCH
J? SWITCHES
VCC
VP
VN
TOUCH5
TOUCH3
CANV
RED
GREEN
BLUE
RGB_SHIELD
TX
RX
SERIAL_ISP
SW1
SW2
SW3
SW4
ESP32 Microcontroller
U? ESP32-DEVBOARD
U? ESP32-WROOM
C? 100uF
3V3
EN
SENSOR_VP
SENSOR_VN
IO34
IO35
IO32
IO33
IO25
IO26
IO27
IO14
IO12
GND
IO13
SD2
SD3
CMD
5V
IO23
IO22
TXD0
RXD0
IO21
NC
IO19
IO18
IO5
IO17
IO16
IO4
IO0
GND-PAD
SD1
IO15
CLK
DEV3V3
SPEAKER
TOUCH5
RLDR
FLDR
IR_RX
IR_TX
DEV5V
BLUE
GREEN
CTX
RED
PIXELS
CRX
SW0
SDA
SCL
CAN Bus
CTX
CRX
D CANH
R CANL
U?
SN65HVD230
CANH
CANL
CANGND
SHIELD
CAN_IN
CAN_OUT
1: VCC
2: VCC
3: VCC
4: GND
5: GND
6: GND
7: CAN+
8: CAN-
LEDs
WS2812B
DIN DOUT
VDD VSS
C? WS2812B 100nF
R? 470
J? PIXELS
60mA peak (all three LEDs) per pixel (5x = 300mA peak)
Light Level
R? 100k
FLDR
RLDR
Onboard Switches
SW? SW1
SW? SW2
SW? RESET
SW? BOOT
SW0
J?
Pullup Resistors
R? 10k
EN
Speaker
SPEAKER
R? 100
Q? 2N706
LS? Speaker
IR Tx/Rx
IR_RX
IR_TX
U? TSDP341xx
DEMOD
R? 100
D? IRLED
R? 1K
Q? 2N2222
JagDev
Sheet: /
File: domenode.sch
Title: DomeNode
Size: A4
Date:
Rev:
KiCad E.D.A. kicad (5.0.0)
Id: 1/1