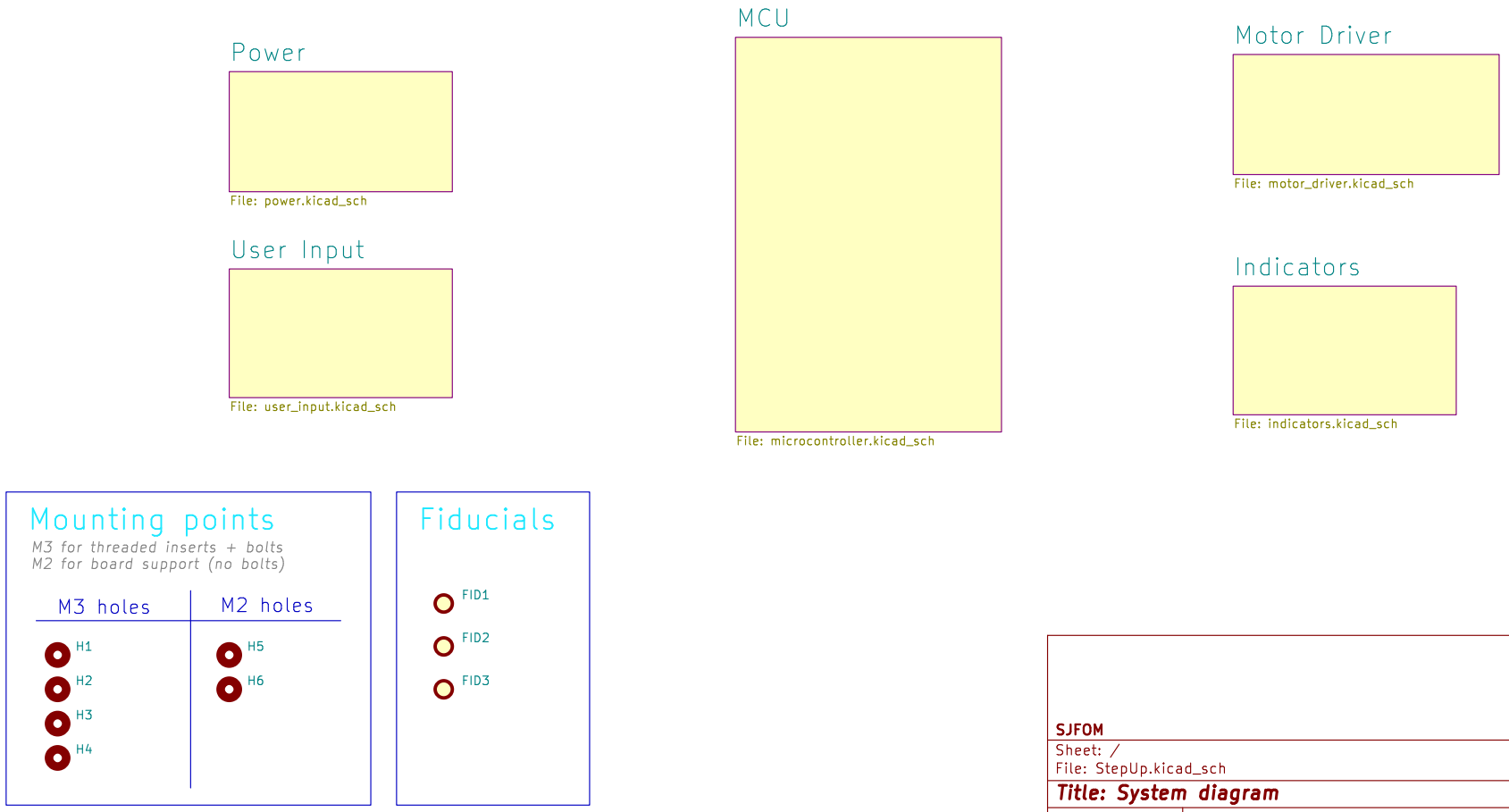

SJFOM

Sheet: /
File: StepUp.kicad_sch

Title: System diagram

Size: A4	Date: 2025-03-03	**Rev: v1.0**
KiCad E.D.A. 9.0.7		Id: 1/6

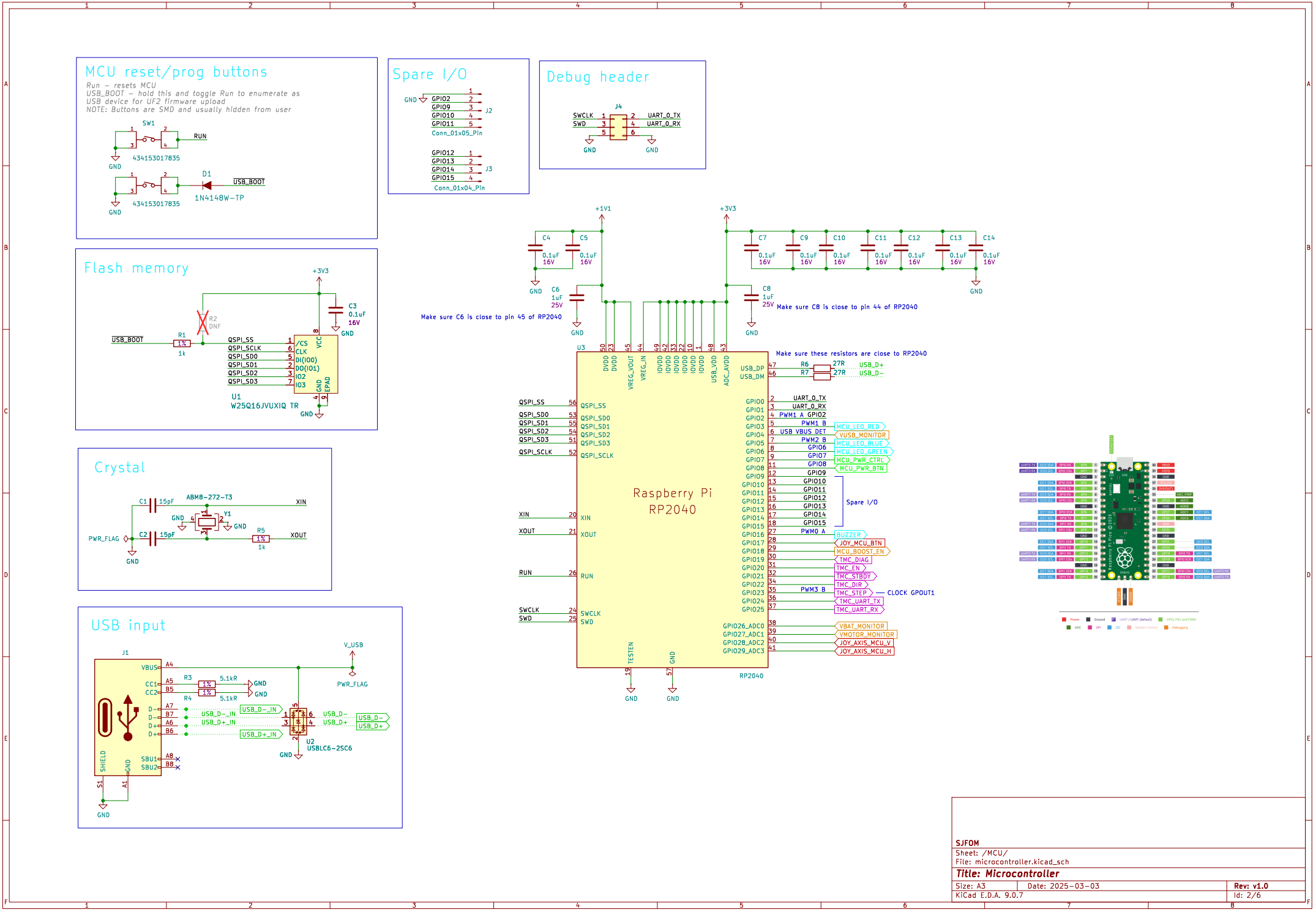

SJFOM		
Sheet: /MCU/		
File: microcontroller.kicad_sch		
Title: Microcontroller		
Size: A3	Date: 2025-03-03	Rev: v1.0
KiCad E.D.A. 9.0.7		Id: 2/6

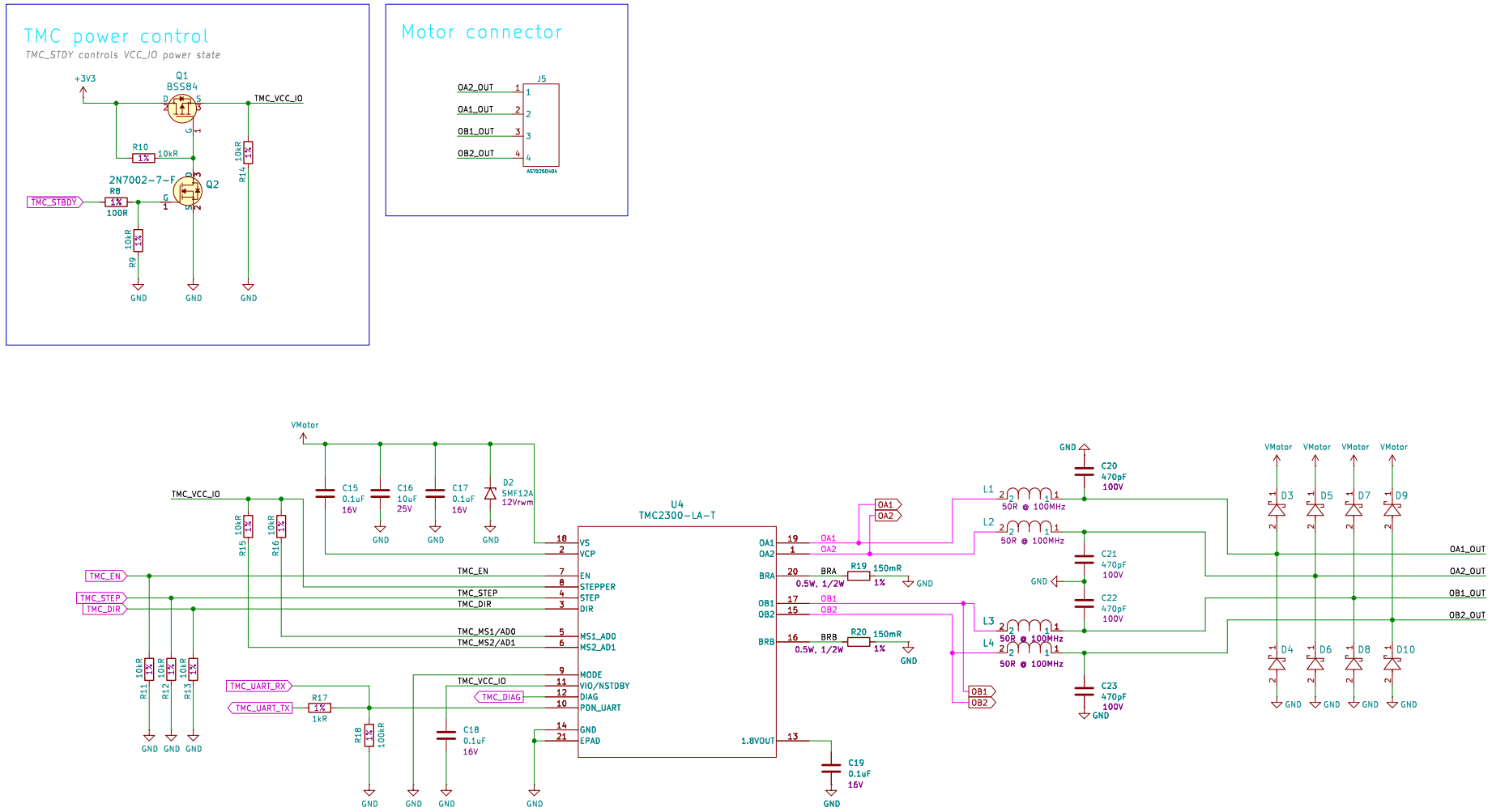

SJFOM		
Sheet: /Motor Driver/		
File: motor_driver.kicad_sch		
Title: Motor Driver		
Size: A3	Date: 2025-03-03	Rev: v1.0
KiCad E.D.A. 9.0.7		Id: 3/6

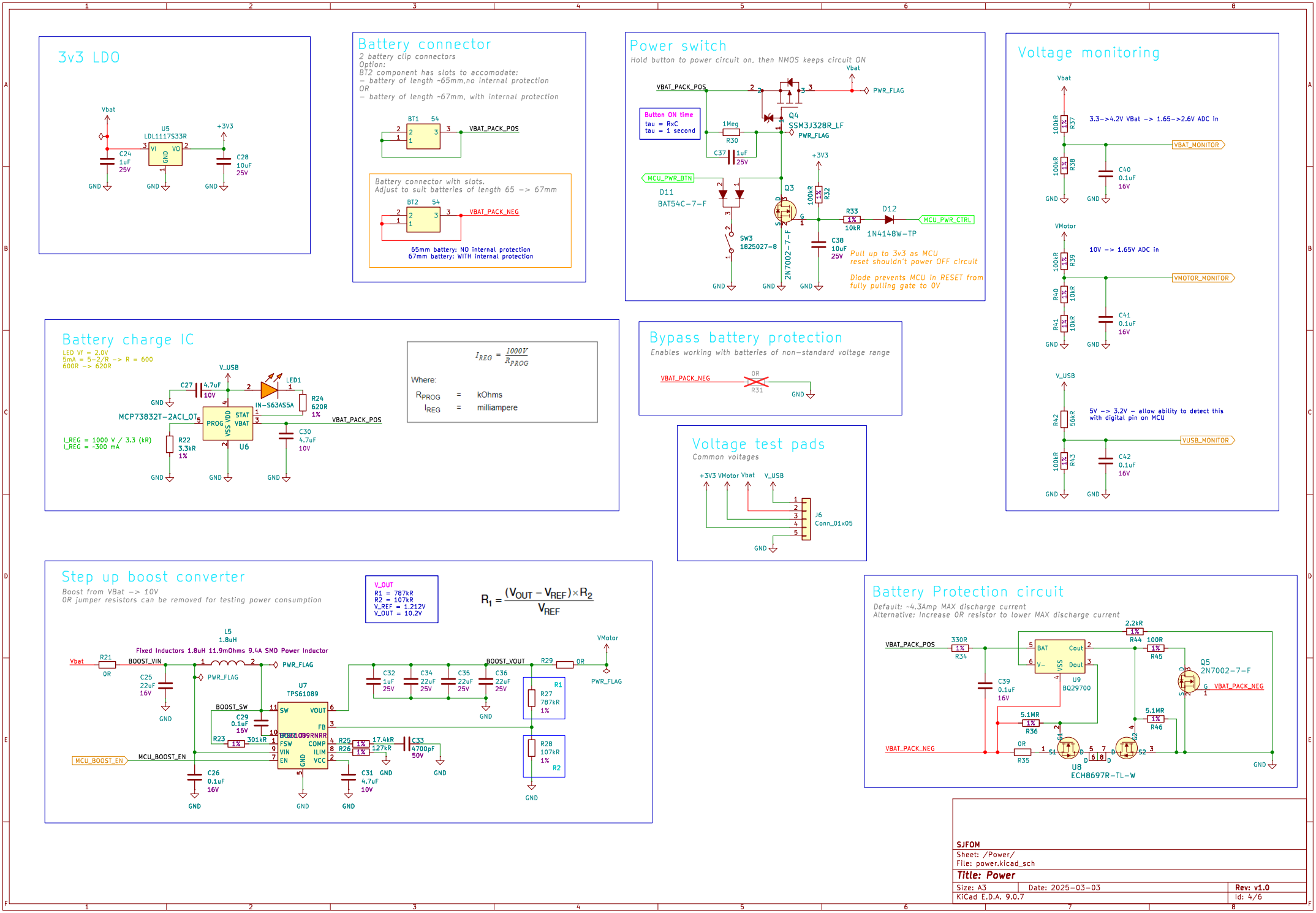
3v3 LDO
Vbat
U5
LDL1117S33R
VI
VO
GND
+3V3
C24
1uF
25V
C28
10uF
25V
Battery connector
2 battery clip connectors
Option:
BT2 component has slots to accomodate:
– battery of length ~65mm,no internal protection
OR
– battery of length ~67mm, with internal protection
BT1
54
VBAT_PACK_POS
Battery connector with slots.
Adjust to suit batteries of length 65 –> 67mm
BT2
VBAT_PACK_NEG
65mm battery: NO internal protection
67mm battery: WITH internal protection
Power switch
Hold button to power circuit on, then NMOS keeps circuit ON
Vbat
VBAT_PACK_POS
PWR_FLAG
Q4
SSM3J328R_LF
Button ON time
tau = RxC
tau = 1 second
1Meg
R30
C37
1uF
25V
+3V3
MCU_PWR_BTN
D11
BAT54C-7-F
Q3
2N7002-7-F
100kR
R32
R33
1%
10kR
D12
1N4148W-TP
MCU_PWR_CTRL
SW3
1825027-8
C38
10uF
25V
Pull up to 3v3 as MCU
reset shouldn't power OFF circuit
Diode prevents MCU in RESET from
fully pulling gate to 0V
Voltage monitoring
Vbat
100kR
R37
R38
3.3->4.2V VBat -> 1.65->2.6V ADC in
VBAT_MONITOR
C40
0.1uF
16V
VMotor
R39
R40
R41
10kR
10V -> 1.65V ADC in
VMOTOR_MONITOR
C41
0.1uF
16V
V_USB
R42
56kR
R43
5V -> 3.2V – allow ability to detect this
with digital pin on MCU
VUSB_MONITOR
C42
0.1uF
16V
Battery charge IC
LED Vf = 2.0V
5mA = 5-2/R -> R = 600
600R -> 620R
V_USB
C27
4.7uF
10V
LED1
IN-S63AS5A
R24
620R
1%
MCP73832T-2ACI_OT
PROG
VSS
VDD
STAT
VBAT
VBAT_PACK_POS
C30
4.7uF
10V
U6
I_REG = 1000 V / 3.3 (kR)
I_REG = ~300 mA
R22
3.3kR
1%
$I_{REG} = \frac{1000V}{R_{PROG}}$
Where:
R_{PROG} = kOhms
I_{REG} = milliampere
Bypass battery protection
Enables working with batteries of non-standard voltage range
VBAT_PACK_NEG
OR
R31
Voltage test pads
Common voltages
+3V3 VMotor Vbat
V_USB
J6
Conn_01x05
Step up boost converter
Boost from VBat -> 10V
OR jumper resistors can be removed for testing power consumption
V_OUT
R1 = 787kR
R2 = 107kR
V_REF = 1.212V
V_OUT = 10.2V
$R_1 = \frac{(V_{OUT} - V_{REF}) \times R_2}{V_{REF}}$
L5
1.8uH
Fixed Inductors 1.8uH 11.9mOhms 9.4A SMD Power Inductor
Vbat
R21
0R
BOOST_VIN
C25
22uF
16V
PWR_FLAG
U7
TPS61089
SW
VOUT
FB
COMP
ILIM
VCC
FSW
VIN
EN
GND
BOOST_SW
C29
0.1uF
16V
R23
301kR
MCU_BOOST_EN
C26
0.1uF
16V
C32
1uF
25V
C34
22uF
25V
C35
22uF
25V
C36
22uF
25V
BOOST_VOUT
R29
0R
VMotor
R25
17.4kR
R26
127kR
C33
4700pF
50V
C31
4.7uF
10V
R1
R27
787kR
1%
R28
107kR
1%
R2
Battery Protection circuit
Default: ~4.3Amp MAX discharge current
Alternative: Increase OR resistor to lower MAX discharge current
2.2kR
R44
100R
R45
VBAT_PACK_POS
330R
R34
BAT
Cout
V–
VSS
Dout
U9
BQ29700
C39
0.1uF
16V
Q5
2N7002-7-F
VBAT_PACK_NEG
5.1MR
R36
R46
0R
R35
U8
ECH8697R-TL-W
SJFOM
Sheet: /Power/
File: power.kicad_sch
Title: Power
Size: A3
Date: 2025-03-03
Rev: v1.0
KiCad E.D.A. 9.0.7
Id: 4/6

Status LED's

Status LEDs, RGB 3-in-1, through-hole, clear dome

LED resistor calculations (matching mcd values)

RED – 20mA = 600 mcd → 1mA = 30mcd
– 300mcd = 10mA
– Vf=2V (typ), 3.3–2V = 1.3V/10mA = 130R → 120R

BLUE – 20mA = 300 mcd → 1mA = 15 mcd
– 300mcd = 20mA
– Vf=3V (typ), 3.3–3V = 0.3V/20mA = 15R → 22R

GREEN – 20mA = 1300 mcd → 1mA = 65 mcd
– 300mcd = 4.6mA
– Vf=3V (typ), 3.3–3V = 0.3V/4.6mA = 65R → 60R

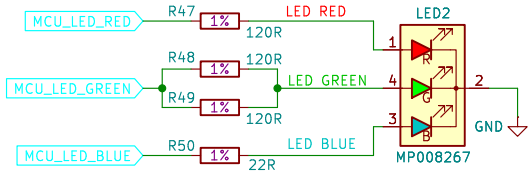

Buzzer

To indicate device states, f = 4kHz
~10V from the boost converter also used for the buzzer

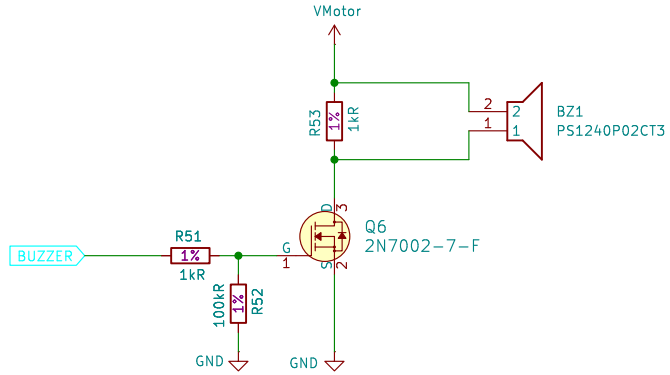

SJFOM

Sheet: /Indicators/
File: indicators.kicad_sch

Title: User Input

Size: A4	Date: 2025-03-03	**Rev: v1.0**
KiCad E.D.A. 9.0.7		Id: 5/6

Joystick

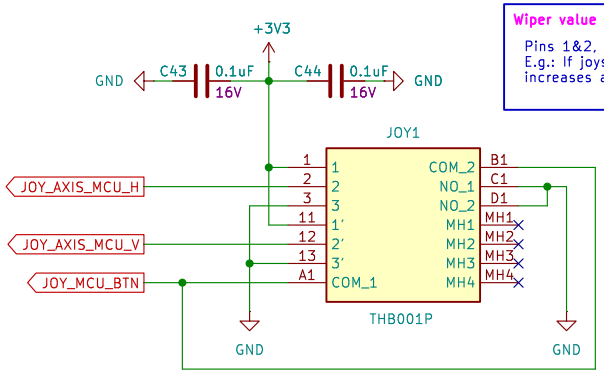

Wiper value

Pins 1&2, resistance goes down as wiper moved in that direction
E.g.: If joystick has pin 1 = 3v3 and pin 3 = GND, pin 2 voltage increases as josytick moved to pin 1, decreases as moved to pin 3

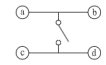

Circuit diagram

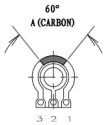

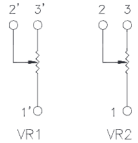

SJFOM

Sheet: /User Input/
File: user_input.kicad_sch

Title: User Input

Size: A4	Date: 2025-03-03	**Rev: v1.0**
KiCad E.D.A. 9.0.7		Id: 6/6