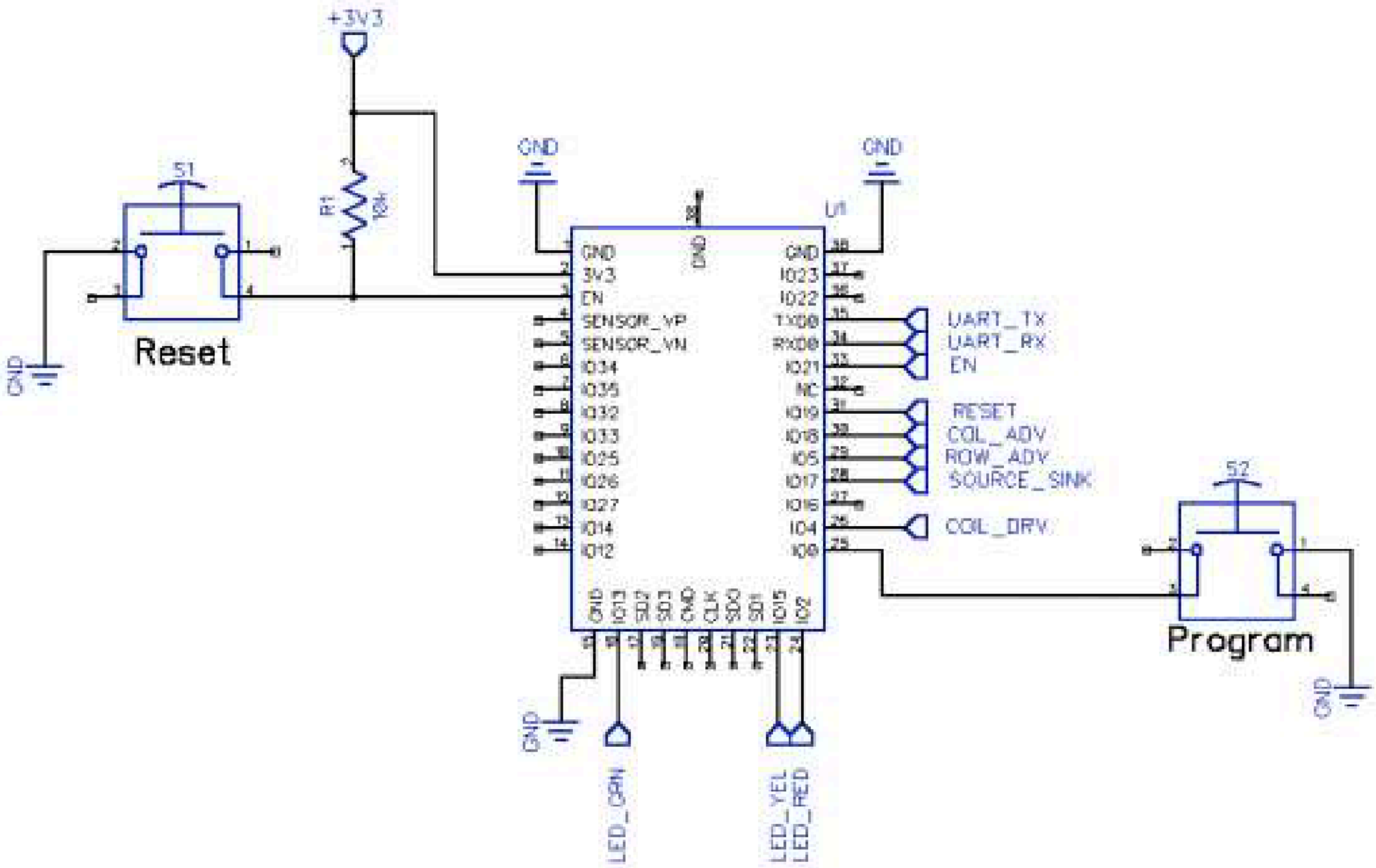
+3V3
S1
Reset
R1
10k
GND
U1
GND
3V3
EN
SENSOR_VP
SENSOR_VN
IO34
IO35
IO32
IO33
IO25
IO26
IO27
IO14
IO12
IO23
IO22
TXD0
RXD0
IO21
NC
IO19
IO18
IO5
IO17
IO16
IO4
IO0
UART_TX
UART_RX
EN
RESET
COL_ADV
ROW_ADV
SOURCE_SINK
COL_DRV
S2
Program
LED_GRN
LED_YEL
LED_RED

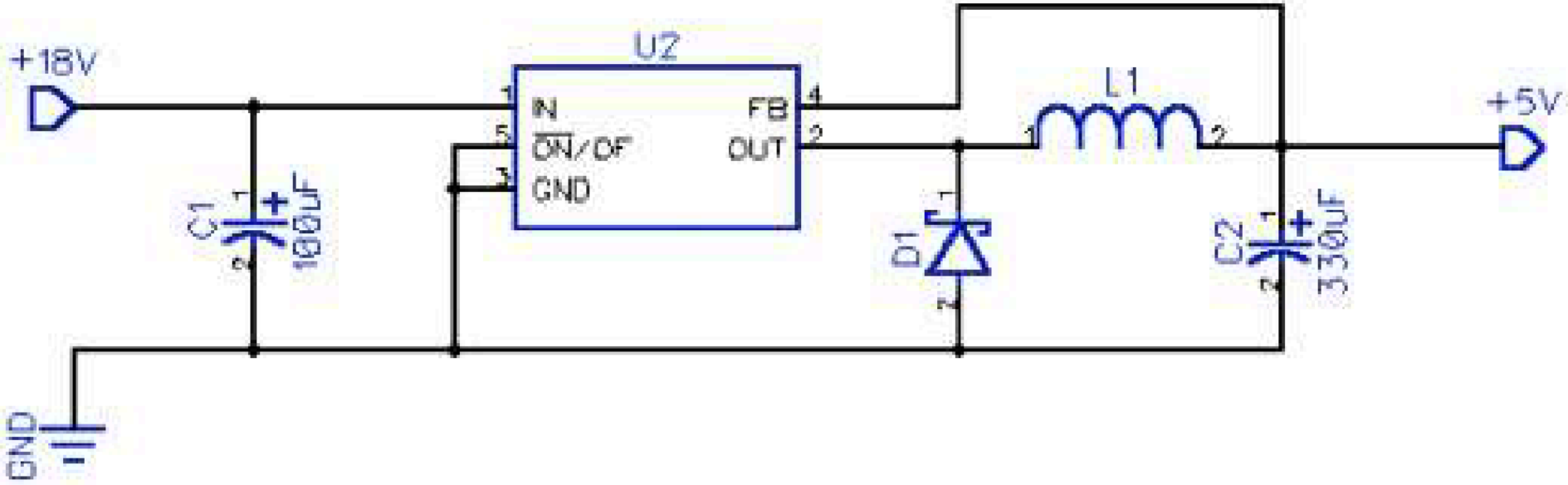
+18V
U2
IN
ON/OF
GND
FB
OUT
L1
+5V
C1
100uF
D1
C2
330uF
GND

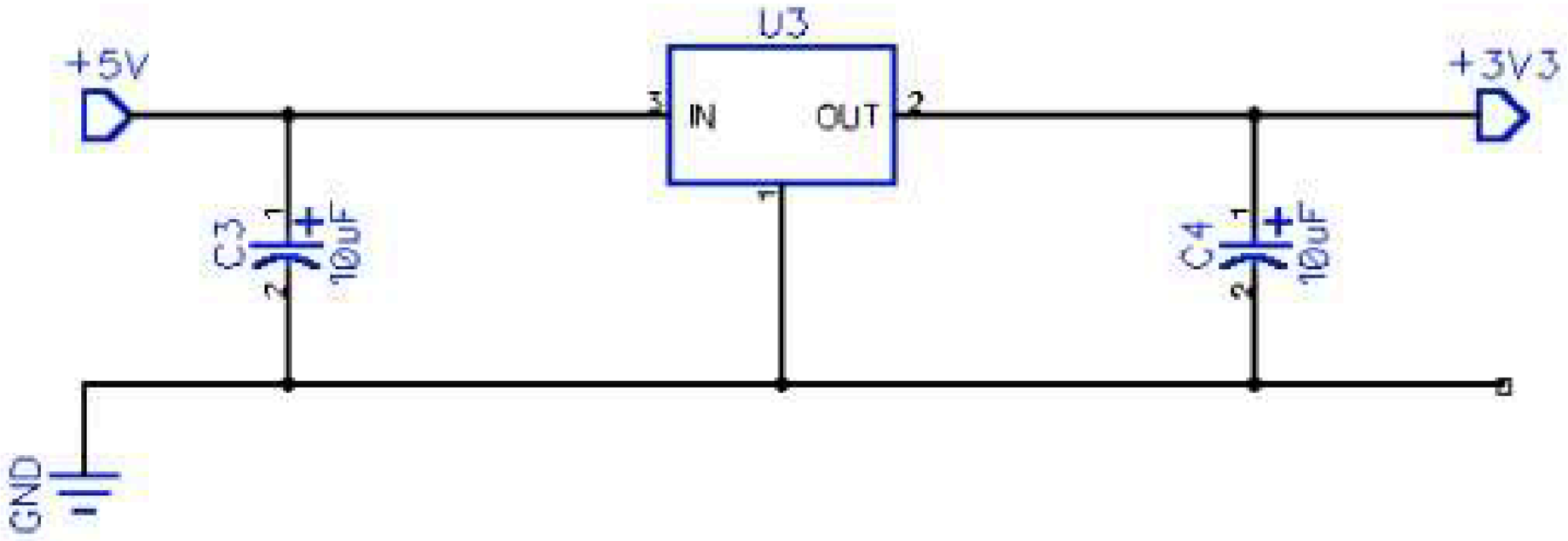
+5V
C3
10uF
GND
U3
IN
OUT
C4
10uF
+3V3

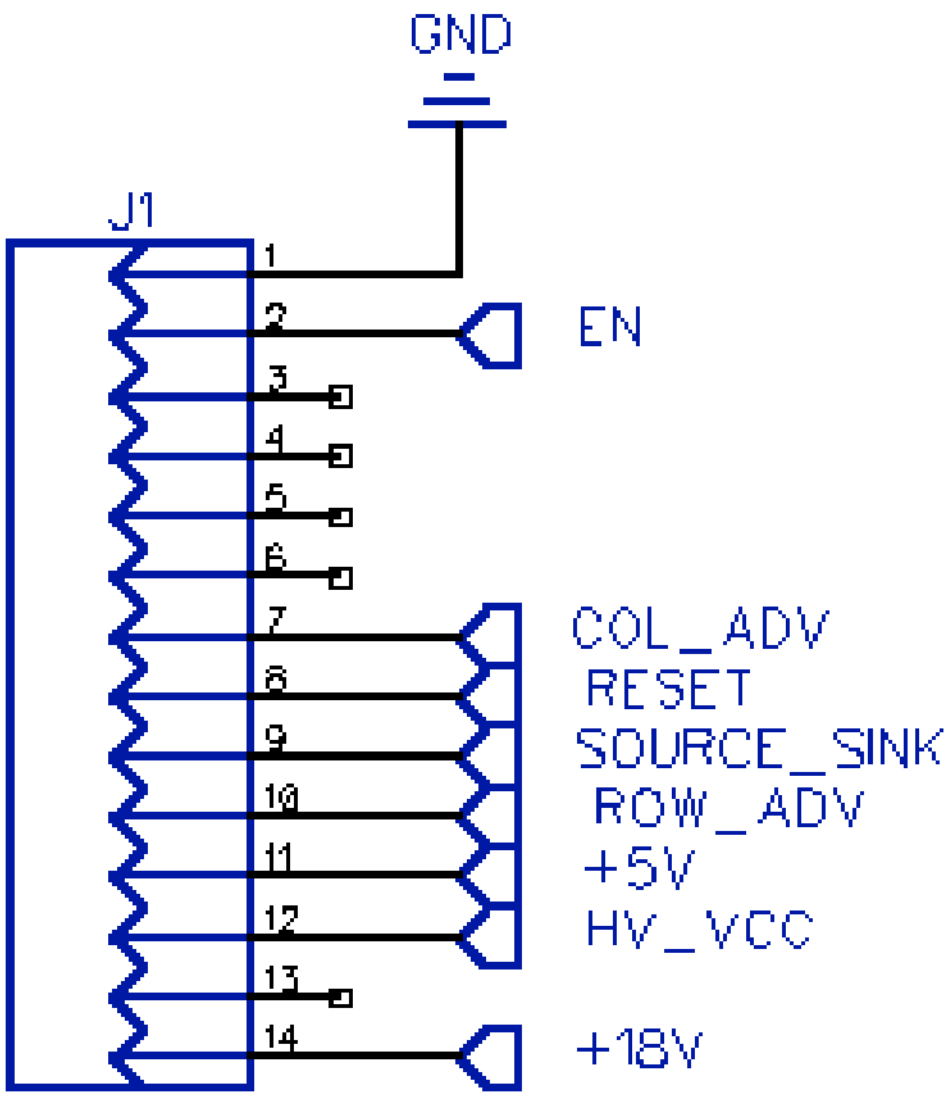
GND
J1
1
2
3
4
5
6
7
8
9
10
11
12
13
14
EN
COL_ADV
RESET
SOURCE_SINK
ROW_ADV
+5V
HV_VCC
+18V

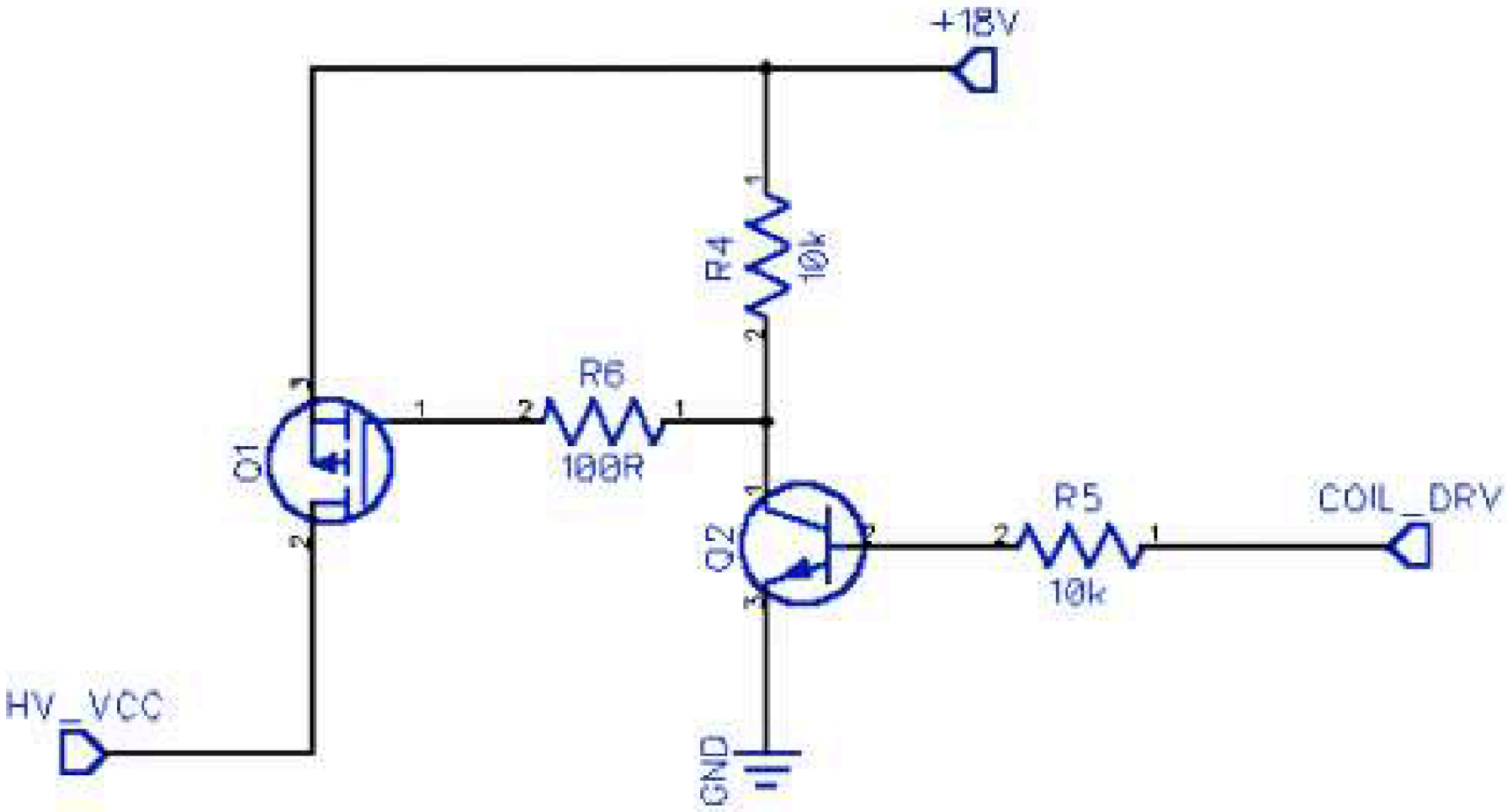
+18V
R4
10k
R6
100R
Q1
Q2
R5
10k
COIL_DRV
HV_VCC
GND

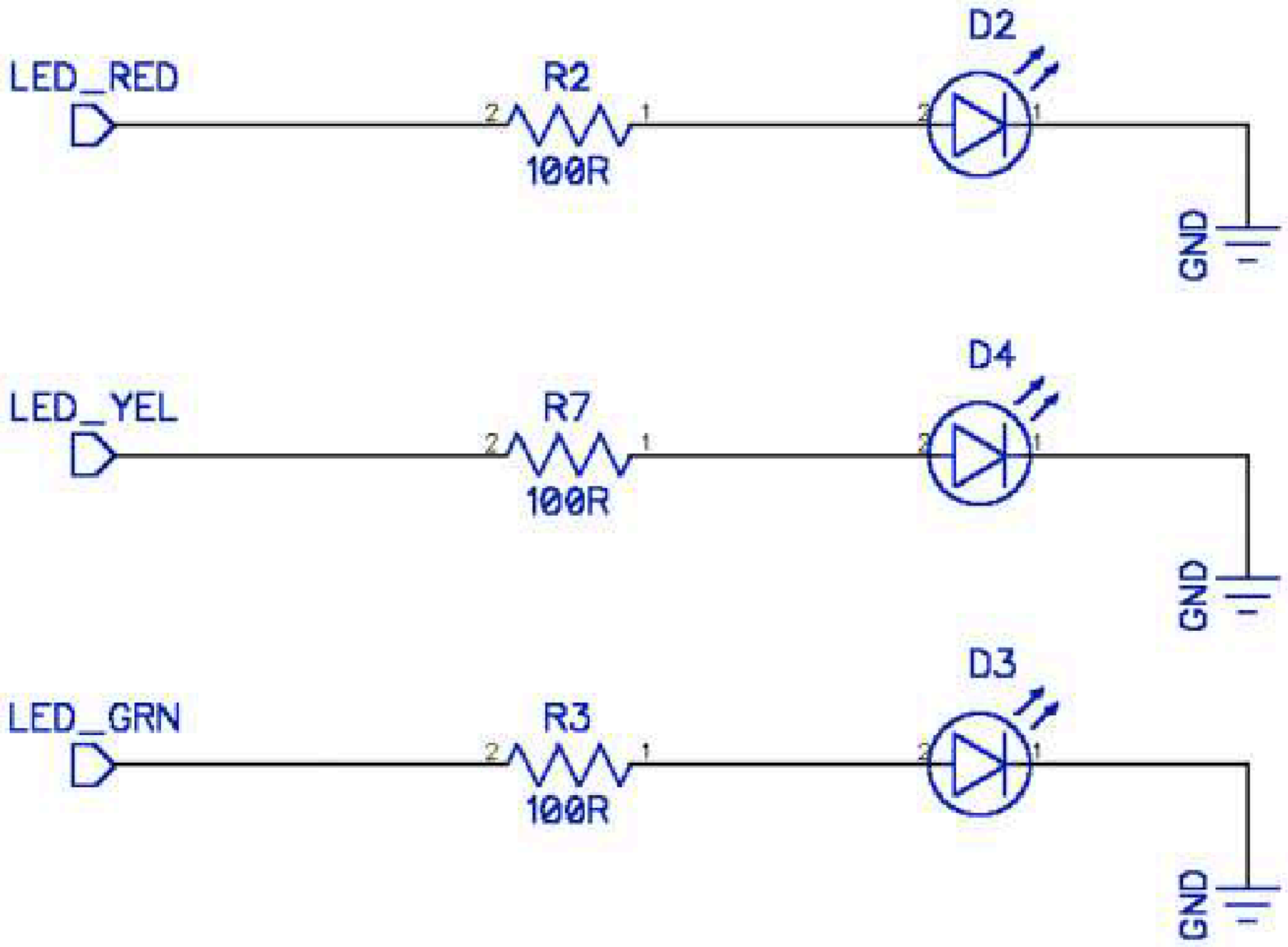
LED_RED
R2
100R
D2
GND
LED_YEL
R7
100R
D4
GND
LED_GRN
R3
100R
D3
GND