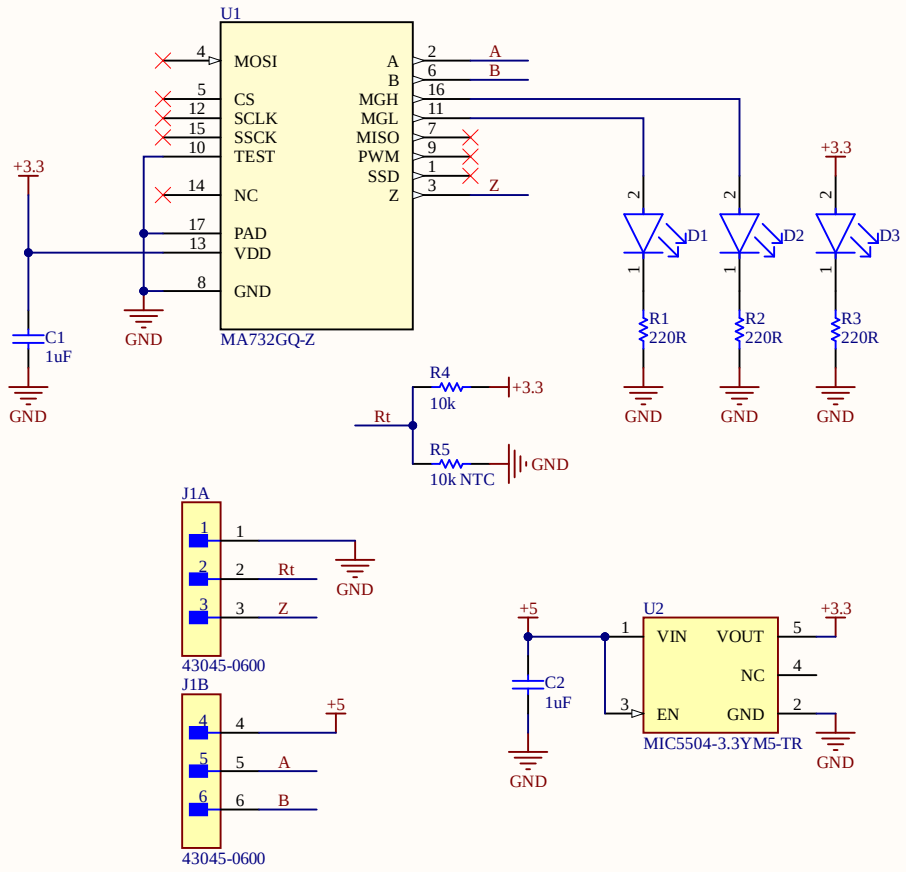

Title		
Size A4	Number	Revision
Date: 1.12.2025		Sheet of
File: D:\electronics\..\MAIN.SchDoc		Drawn By: