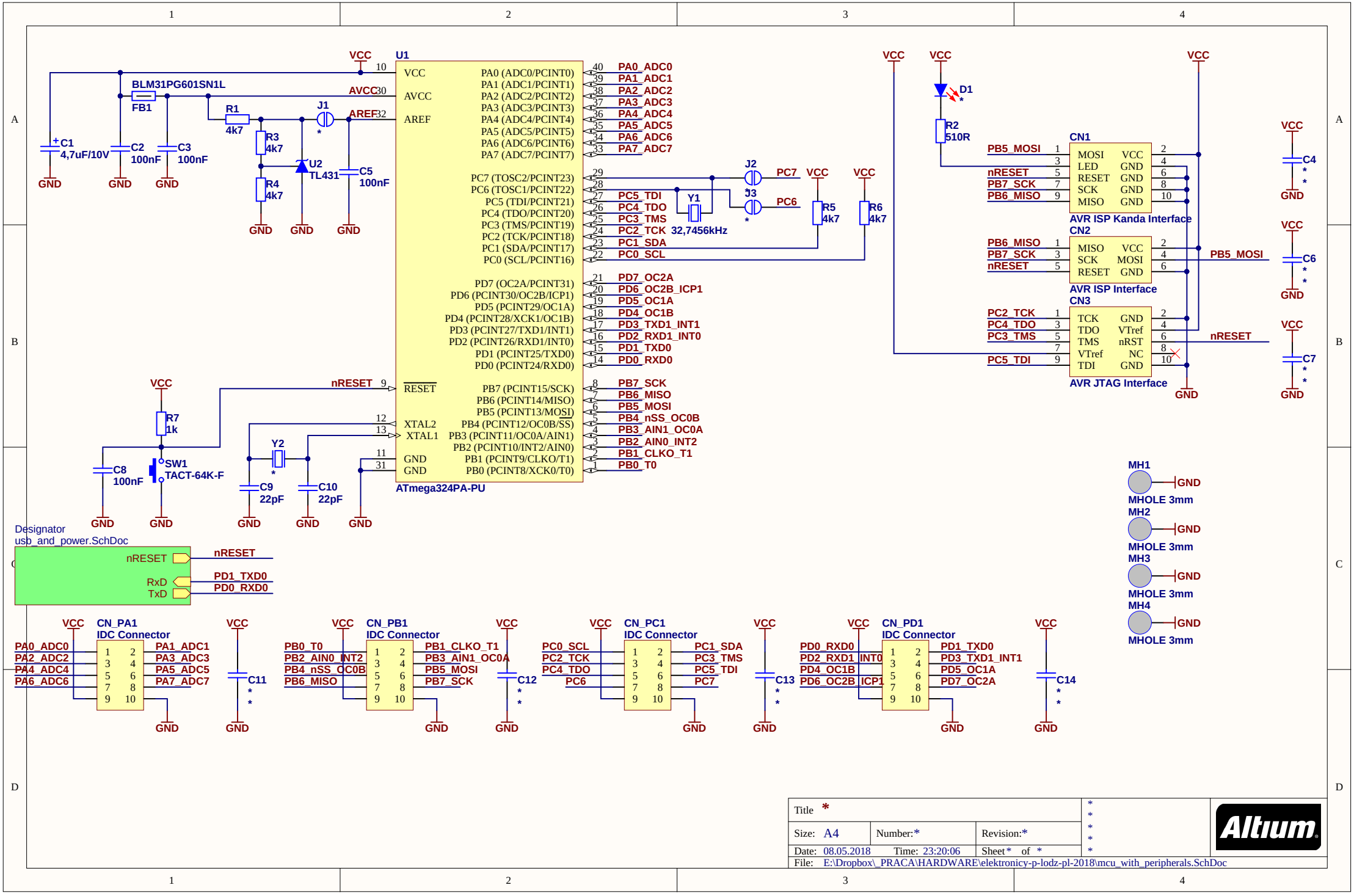
U1
ATmega324PA-PU
VCC
AVCC
AREF
GND
BLM31PG601SN1L
FB1
C1
4,7uF/10V
C2
100nF
C3
100nF
R1
4k7
R3
4k7
R4
4k7
J1
U2
TL431
C5
100nF
PA0 (ADC0/PCINT0)
PA1 (ADC1/PCINT1)
PA2 (ADC2/PCINT2)
PA3 (ADC3/PCINT3)
PA4 (ADC4/PCINT4)
PA5 (ADC5/PCINT5)
PA6 (ADC6/PCINT6)
PA7 (ADC7/PCINT7)
PC7 (TOSC2/PCINT23)
PC6 (TOSC1/PCINT22)
PC5 (TDI/PCINT21)
PC4 (TDO/PCINT20)
PC3 (TMS/PCINT19)
PC2 (TCK/PCINT18)
PC1 (SDA/PCINT17)
PC0 (SCL/PCINT16)
PD7 (OC2A/PCINT31)
PD6 (PCINT30/OC2B/ICP1)
PD5 (PCINT29/OC1A)
PD4 (PCINT28/XCK1/OC1B)
PD3 (PCINT27/TXD1/INT1)
PD2 (PCINT26/RXD1/INT0)
PD1 (PCINT25/TXD0)
PD0 (PCINT24/RXD0)
RESET
PB7 (PCINT15/SCK)
PB6 (PCINT14/MISO)
PB5 (PCINT13/MOSI)
XTAL2
PB4 (PCINT12/OC0B/SS)
XTAL1
PB3 (PCINT11/OC0A/AIN1)
PB2 (PCINT10/INT2/AIN0)
GND
PB1 (PCINT9/CLKO/T1)
GND
PB0 (PCINT8/XCK0/T0)
PA0_ADC0
PA1_ADC1
PA2_ADC2
PA3_ADC3
PA4_ADC4
PA5_ADC5
PA6_ADC6
PA7_ADC7
PC5_TDI
PC4_TDO
PC3_TMS
PC2_TCK
PC1_SDA
PC0_SCL
PD7_OC2A
PD6_OC2B_ICP1
PD5_OC1A
PD4_OC1B
PD3_TXD1_INT1
PD2_RXD1_INT0
PD1_TXD0
PD0_RXD0
PB7_SCK
PB6_MISO
PB5_MOSI
PB4_nSS_OC0B
PB3_AIN1_OC0A
PB2_AIN0_INT2
PB1_CLKO_T1
PB0_T0
nRESET
J2
J3
PC7
PC6
Y1
32,7456kHz
R5
4k7
R6
4k7
D1
R2
510R
CN1
AVR ISP Kanda Interface
MOSI
LED
RESET
SCK
MISO
CN2
AVR ISP Interface
CN3
AVR JTAG Interface
TCK
TDO
TMS
VTref
TDI
nRST
NC
C4
C6
C7
R7
1k
C8
100nF
SW1
TACT-64K-F
Y2
C9
22pF
C10
22pF
Designator
usb_and_power.SchDoc
RxD
TxD
MH1
MH2
MH3
MH4
MHOLE 3mm
CN_PA1
CN_PB1
CN_PC1
CN_PD1
IDC Connector
C11
C12
C13
C14
Title *
Size: A4
Number:*
Revision:*
Date: 08.05.2018
Time: 23:20:06
Sheet * of *
File: E:\Dropbox_PRACA\HARDWARE\elektronicy-p-lodz-pl-2018\mcu_with_peripherals.SchDoc
Altium

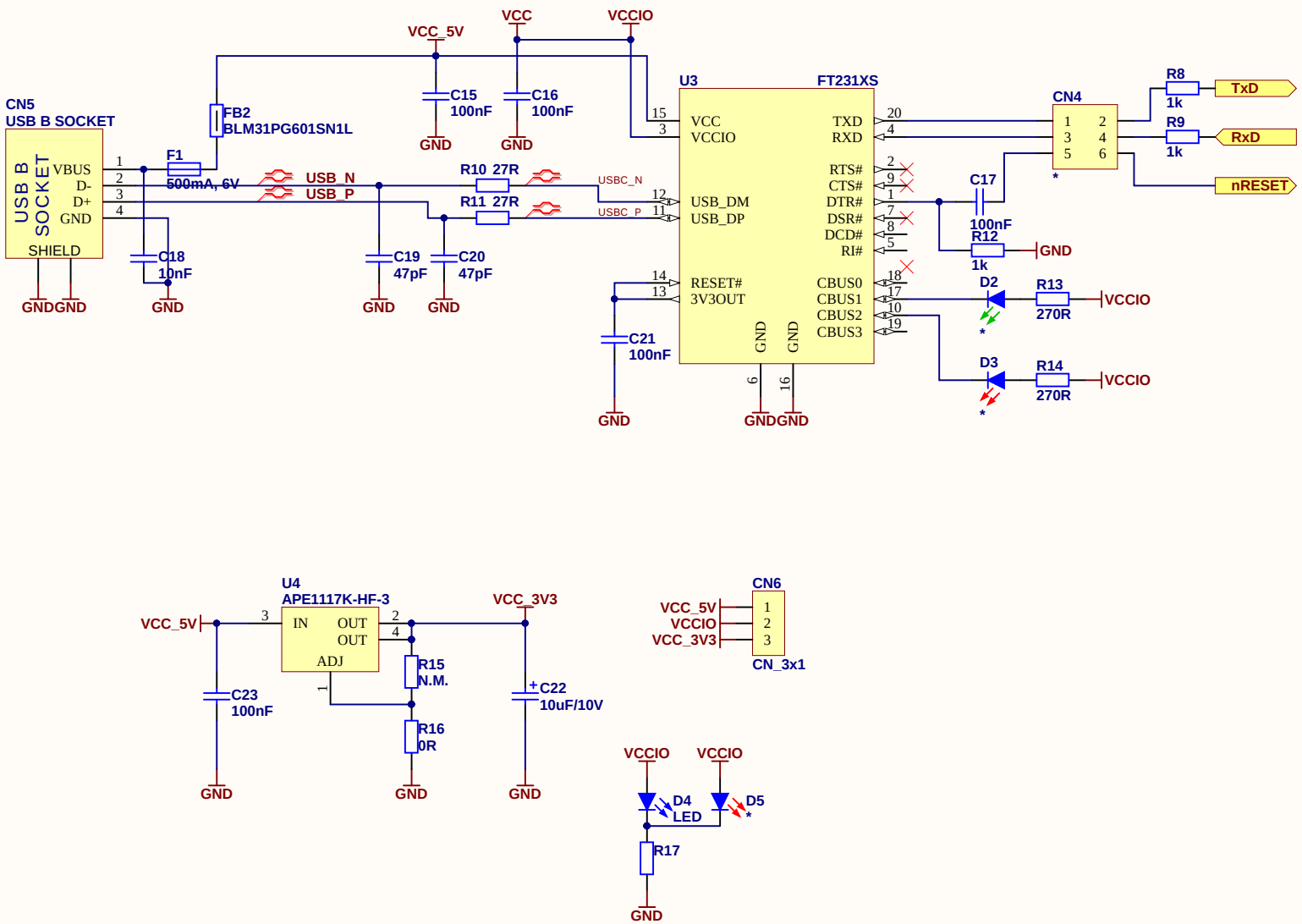

Title *			
Size: A4	Number:*	Revision:*	
Date: 08.05.2018	Time: 23:20:07	Sheet * of *	
File: E:\Dropbox_PRACA\HARDWARE\elektronicy-p-lodz-pl-2018\usb_and_power.SchDoc			