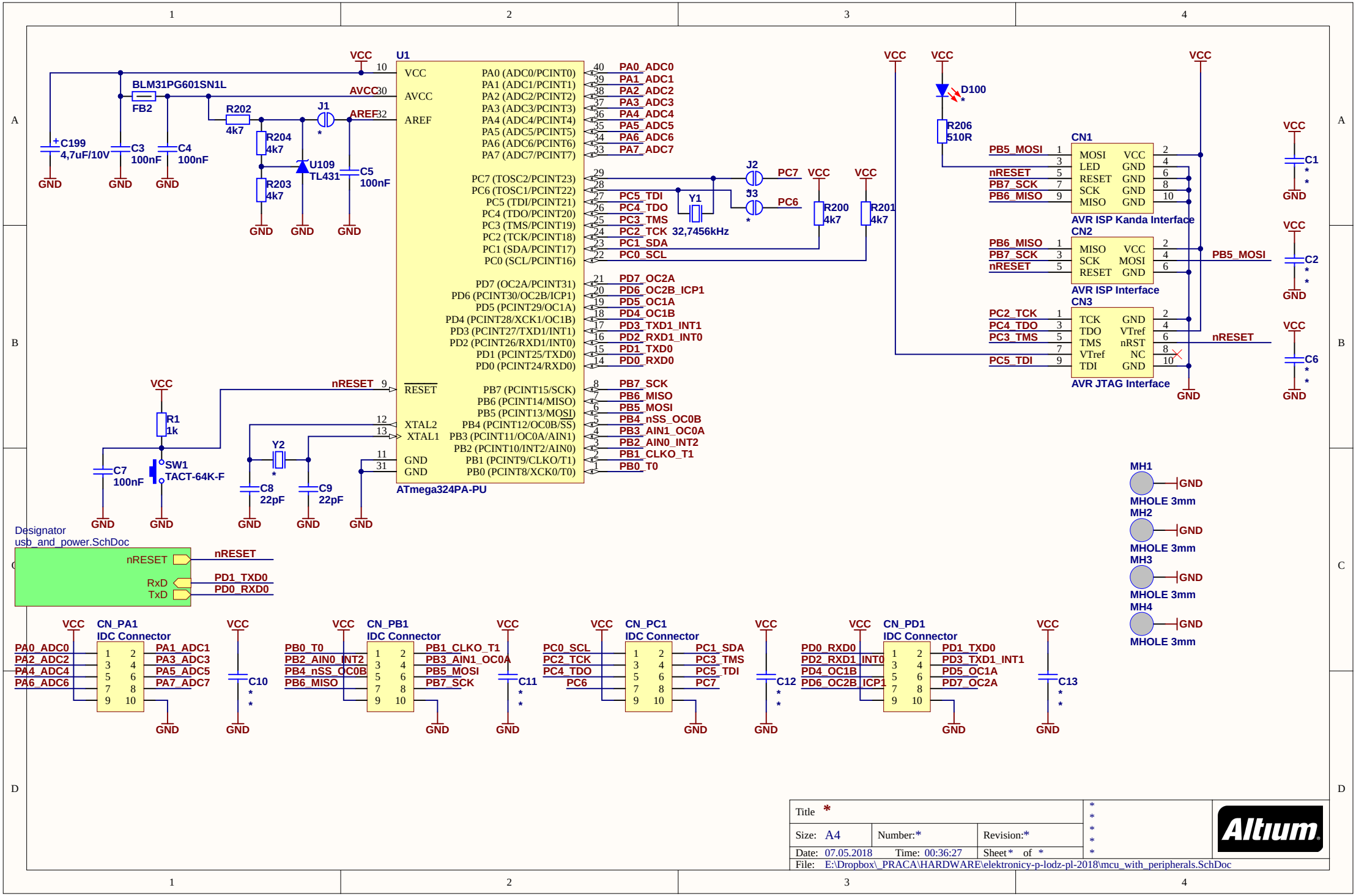
U1
ATmega324PA-PU
VCC
AVCC
AREF
GND
BLM31PG601SN1L
FB2
C199
4,7uF/10V
C3
100nF
C4
100nF
R202
4k7
R204
4k7
R203
4k7
J1
U109
TL431
C5
100nF
PA0 (ADC0/PCINT0)
PA1 (ADC1/PCINT1)
PA2 (ADC2/PCINT2)
PA3 (ADC3/PCINT3)
PA4 (ADC4/PCINT4)
PA5 (ADC5/PCINT5)
PA6 (ADC6/PCINT6)
PA7 (ADC7/PCINT7)
PC7 (TOSC2/PCINT23)
PC6 (TOSC1/PCINT22)
PC5 (TDI/PCINT21)
PC4 (TDO/PCINT20)
PC3 (TMS/PCINT19)
PC2 (TCK/PCINT18)
PC1 (SDA/PCINT17)
PC0 (SCL/PCINT16)
PD7 (OC2A/PCINT31)
PD6 (PCINT30/OC2B/ICP1)
PD5 (PCINT29/OC1A)
PD4 (PCINT28/XCK1/OC1B)
PD3 (PCINT27/TXD1/INT1)
PD2 (PCINT26/RXD1/INT0)
PD1 (PCINT25/TXD0)
PD0 (PCINT24/RXD0)
RESET
PB7 (PCINT15/SCK)
PB6 (PCINT14/MISO)
PB5 (PCINT13/MOSI)
XTAL2
PB4 (PCINT12/OC0B/SS)
XTAL1
PB3 (PCINT11/OC0A/AIN1)
PB2 (PCINT10/INT2/AIN0)
GND
PB1 (PCINT9/CLKO/T1)
GND
PB0 (PCINT8/XCK0/T0)
PA0_ADC0
PA1_ADC1
PA2_ADC2
PA3_ADC3
PA4_ADC4
PA5_ADC5
PA6_ADC6
PA7_ADC7
PC5_TDI
PC4_TDO
PC3_TMS
PC2_TCK
PC1_SDA
PC0_SCL
PD7_OC2A
PD6_OC2B_ICP1
PD5_OC1A
PD4_OC1B
PD3_TXD1_INT1
PD2_RXD1_INT0
PD1_TXD0
PD0_RXD0
PB7_SCK
PB6_MISO
PB5_MOSI
PB4_nSS_OC0B
PB3_AIN1_OC0A
PB2_AIN0_INT2
PB1_CLKO_T1
PB0_T0
nRESET
J2
J3
PC7
PC6
Y1
32,7456kHz
R200
4k7
R201
4k7
D100
R206
510R
CN1
AVR ISP Kanda Interface
MOSI
LED
RESET
SCK
MISO
VCC
GND
PB5_MOSI
nRESET
PB7_SCK
PB6_MISO
CN2
AVR ISP Interface
MISO
SCK
RESET
VCC
MOSI
GND
PB6_MISO
PB7_SCK
nRESET
PB5_MOSI
CN3
AVR JTAG Interface
TCK
TDO
TMS
VTref
TDI
GND
VTref
nRST
NC
PC2_TCK
PC4_TDO
PC3_TMS
PC5_TDI
nRESET
C1
C2
C6
R1
1k
C7
100nF
SW1
TACT-64K-F
Y2
C8
22pF
C9
22pF
Designator
usb_and_power.SchDoc
nRESET
RxD
TxD
PD1_TXD0
PD0_RXD0
MH1
MH2
MH3
MH4
MHOLE 3mm
CN_PA1
IDC Connector
PA0_ADC0
PA2_ADC2
PA4_ADC4
PA6_ADC6
PA1_ADC1
PA3_ADC3
PA5_ADC5
PA7_ADC7
C10
CN_PB1
IDC Connector
PB0_T0
PB2_AIN0_INT2
PB4_nSS_OC0B
PB6_MISO
PB1_CLKO_T1
PB3_AIN1_OC0A
PB5_MOSI
PB7_SCK
C11
CN_PC1
IDC Connector
PC0_SCL
PC2_TCK
PC4_TDO
PC6
PC1_SDA
PC3_TMS
PC5_TDI
PC7
C12
CN_PD1
IDC Connector
PD0_RXD0
PD2_RXD1_INT0
PD4_OC1B
PD6_OC2B_ICP1
PD1_TXD0
PD3_TXD1_INT1
PD5_OC1A
PD7_OC2A
C13
Title *
Size: A4
Number:*
Revision:*
Date: 07.05.2018
Time: 00:36:27
Sheet * of *
File: E:\Dropbox_PRACA\HARDWARE\elektronicy-p-lodz-pl-2018\mcu_with_peripherals.SchDoc
Altium

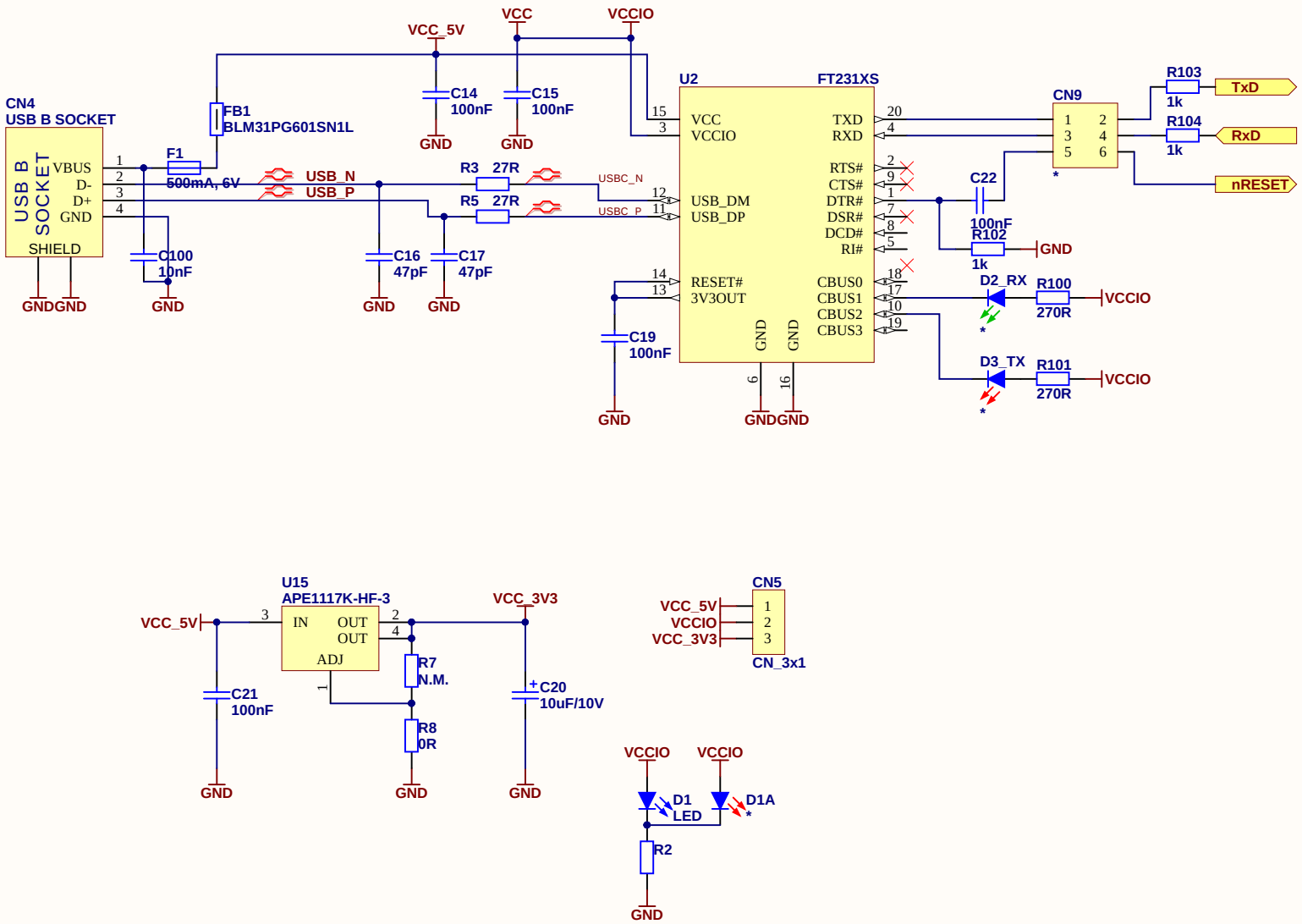

Title *			
Size: A4	Number:*	Revision:*	
Date: 07.05.2018	Time: 00:36:27	Sheet * of *	
File: E:\Dropbox_PRACA\HARDWARE\elektronicy-p-lodz-pl-2018\usb_and_power.SchDoc			