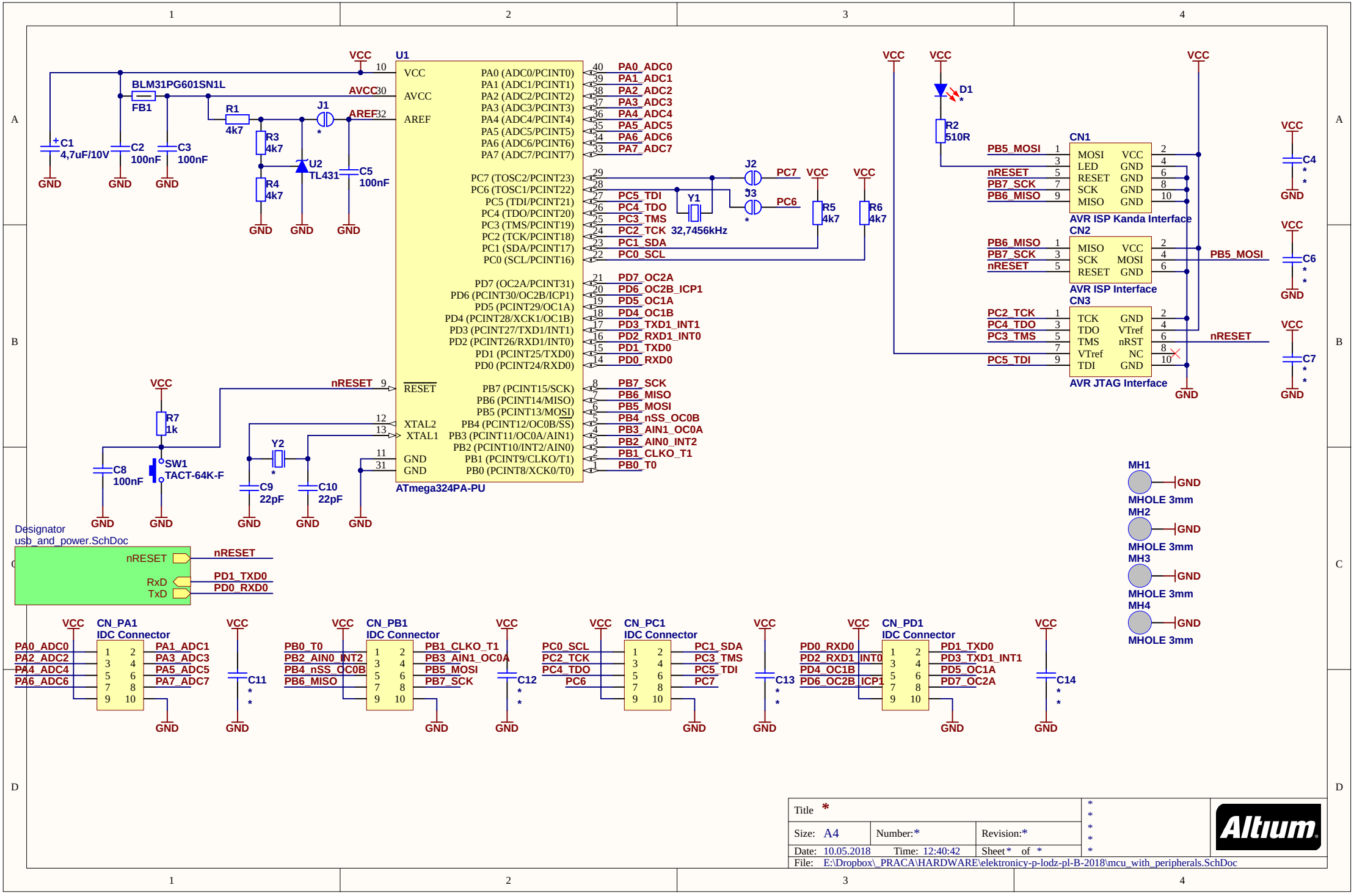
U1
ATmega324PA-PU
VCC
AVCC
AREF
GND
nRESET
XTAL2
XTAL1
PA0 (ADC0/PCINT0)
PA1 (ADC1/PCINT1)
PA2 (ADC2/PCINT2)
PA3 (ADC3/PCINT3)
PA4 (ADC4/PCINT4)
PA5 (ADC5/PCINT5)
PA6 (ADC6/PCINT6)
PA7 (ADC7/PCINT7)
PC7 (TOSC2/PCINT23)
PC6 (TOSC1/PCINT22)
PC5 (TDI/PCINT21)
PC4 (TDO/PCINT20)
PC3 (TMS/PCINT19)
PC2 (TCK/PCINT18)
PC1 (SDA/PCINT17)
PC0 (SCL/PCINT16)
PD7 (OC2A/PCINT31)
PD6 (PCINT30/OC2B/ICP1)
PD5 (PCINT29/OC1A)
PD4 (PCINT28/XCK1/OC1B)
PD3 (PCINT27/TXD1/INT1)
PD2 (PCINT26/RXD1/INT0)
PD1 (PCINT25/TXD0)
PD0 (PCINT24/RXD0)
PB7 (PCINT15/SCK)
PB6 (PCINT14/MISO)
PB5 (PCINT13/MOSI)
PB4 (PCINT12/OC0B/SS)
PB3 (PCINT11/OC0A/AIN1)
PB2 (PCINT10/INT2/AIN0)
PB1 (PCINT9/CLKO/T1)
PB0 (PCINT8/XCK0/T0)
PA0_ADC0
PA1_ADC1
PA2_ADC2
PA3_ADC3
PA4_ADC4
PA5_ADC5
PA6_ADC6
PA7_ADC7
PC5_TDI
PC4_TDO
PC3_TMS
PC2_TCK
PC1_SDA
PC0_SCL
PD7_OC2A
PD6_OC2B_ICP1
PD5_OC1A
PD4_OC1B
PD3_TXD1_INT1
PD2_RXD1_INT0
PD1_TXD0
PD0_RXD0
PB7_SCK
PB6_MISO
PB5_MOSI
PB4_nSS_OC0B
PB3_AIN1_OC0A
PB2_AIN0_INT2
PB1_CLKO_T1
PB0_T0
BLM31PG601SN1L
FB1
C1 4,7uF/10V
C2 100nF
C3 100nF
R1 4k7
R3 4k7
R4 4k7
U2 TL431
C5 100nF
J1
J2
J3
PC7
PC6
Y1 32,7456kHz
R5 4k7
R6 4k7
D1
R2 510R
CN1
AVR ISP Kanda Interface
CN2
AVR ISP Interface
CN3
AVR JTAG Interface
PB5_MOSI
nRESET
PB7_SCK
PB6_MISO
PC2_TCK
PC4_TDO
PC3_TMS
PC5_TDI
C4
C6
C7
R7 1k
C8 100nF
SW1 TACT-64K-F
Y2
C9 22pF
C10 22pF
Designator
usb_and_power.SchDoc
nRESET
RxD
TxD
PD1_TXD0
PD0_RXD0
MH1
MH2
MH3
MH4
MHOLE 3mm
CN_PA1
CN_PB1
CN_PC1
CN_PD1
IDC Connector
PA0_ADC0
PA2_ADC2
PA4_ADC4
PA6_ADC6
PA1_ADC1
PA3_ADC3
PA5_ADC5
PA7_ADC7
PB0_T0
PB2_AIN0_INT2
PB4_nSS_OC0B
PB6_MISO
PB1_CLKO_T1
PB3_AIN1_OC0A
PB5_MOSI
PB7_SCK
PC0_SCL
PC2_TCK
PC4_TDO
PC6
PC1_SDA
PC3_TMS
PC5_TDI
PC7
PD0_RXD0
PD2_RXD1_INT0
PD4_OC1B
PD6_OC2B_ICP1
PD1_TXD0
PD3_TXD1_INT1
PD5_OC1A
PD7_OC2A
C11
C12
C13
C14
Title *
Size: A4
Number:*
Revision:*
Date: 10.05.2018
Time: 12:40:42
Sheet * of *
File: E:\Dropbox_PRACA\HARDWARE\elektronicy-p-lodz-pl-B-2018\mcu_with_peripherals.SchDoc
Altium

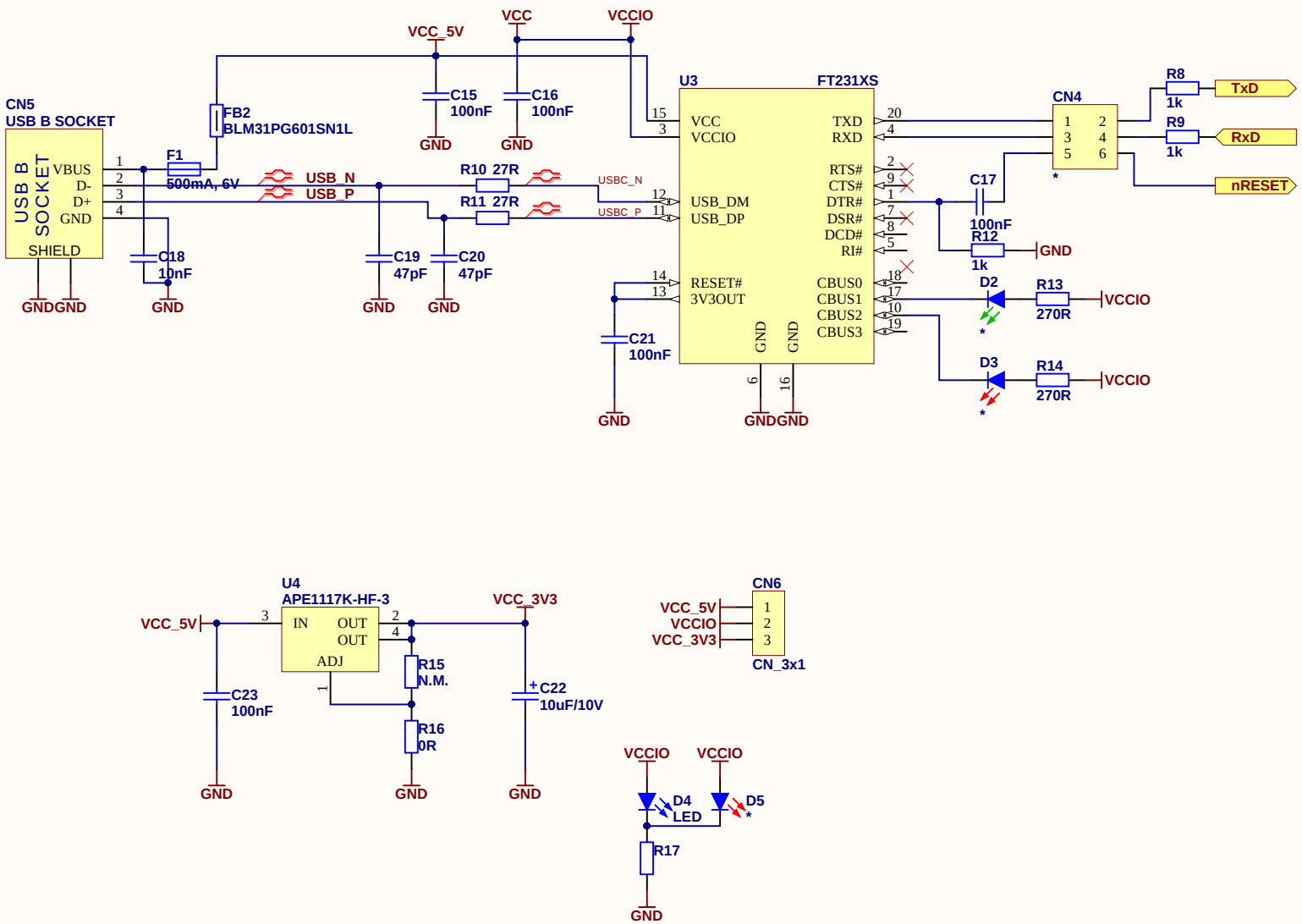

Title *			
Size: A4	Number:*	Revision:*	
Date: 10.05.2018	Time: 12:40:42	Sheet * of *	
File: E:\Dropbox_PRACA\HARDWARE\elektronicy-p-lodz-pl-B-2018\usb_and_power.SchDoc			