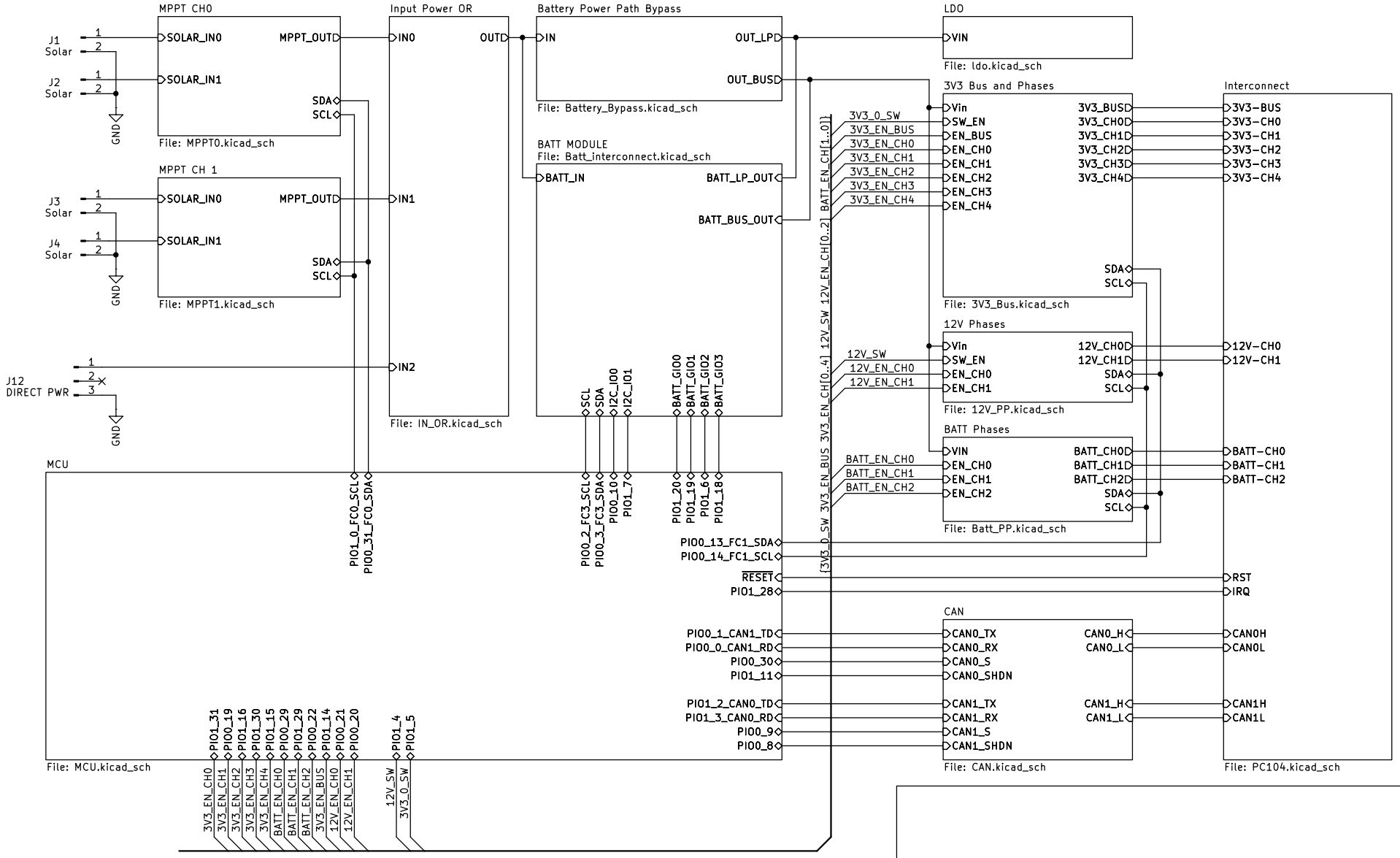

Sheet: /
File: Power_Distribution_Board.kicad_sch

Title: Power Distribution Board

Size: A4	Date:	Rev: 2.3
KiCad E.D.A. 9.0.1		Id: 1/13

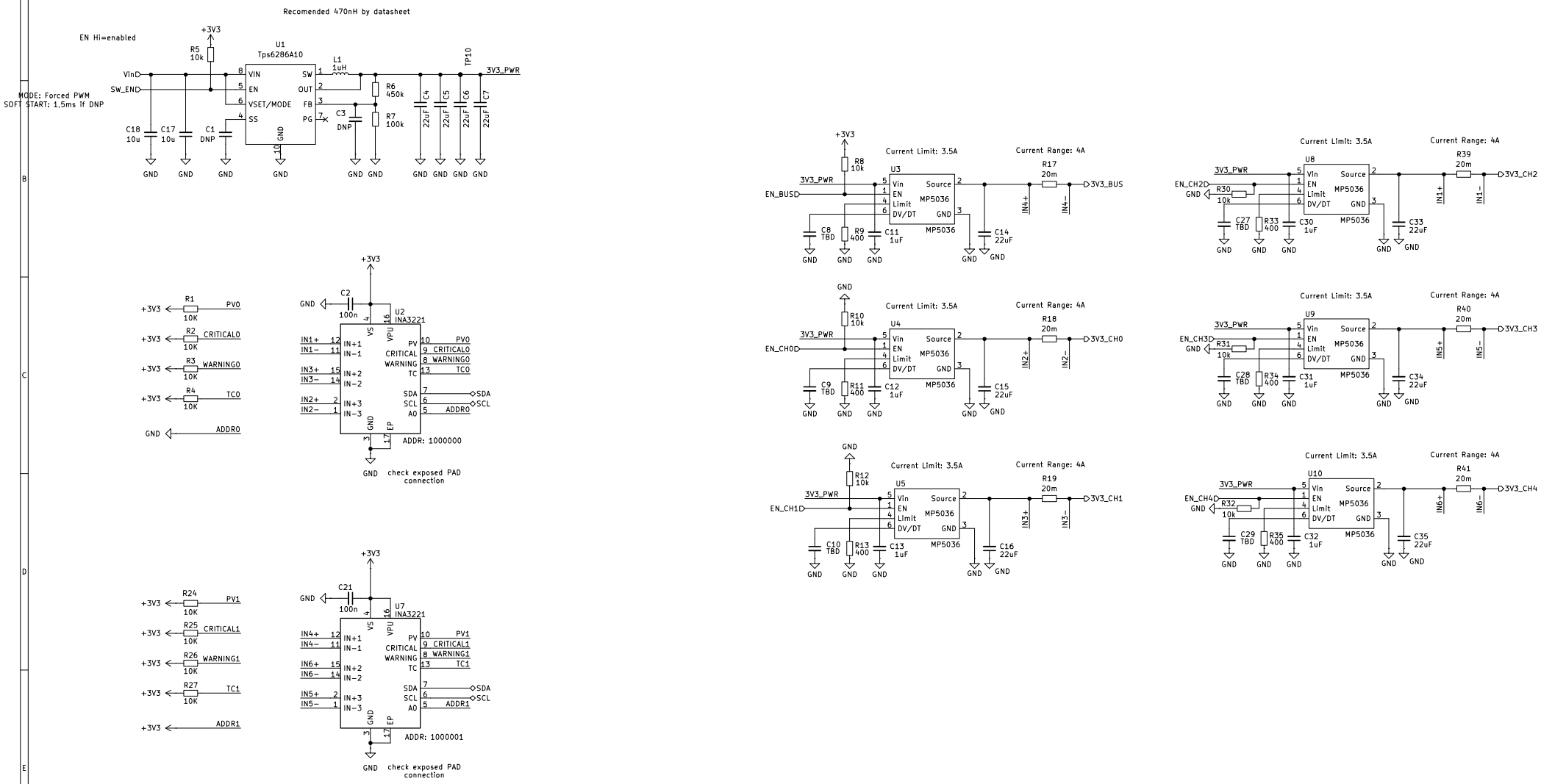

Sheet: /3V3 Bus and Phases/
File: 3V3_Bus.kicad_sch

Title: Power Distribution Board

Size: A3	Date:	**Rev: 2.3**
KiCad E.D.A. 9.0.1		Id: 2/13

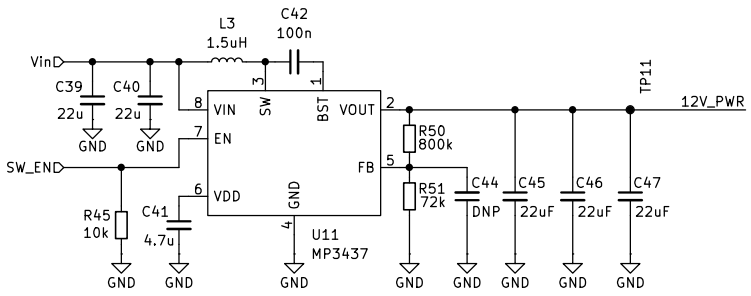

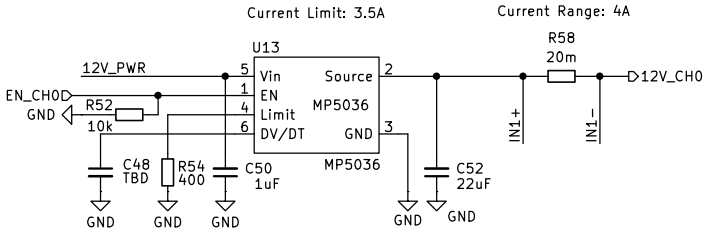

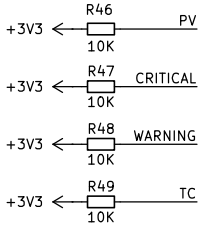

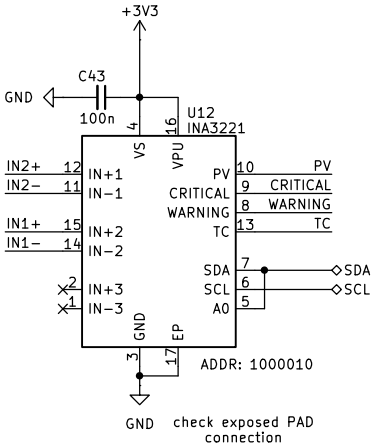

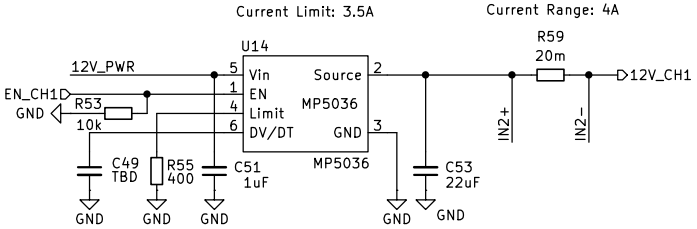

Sheet: /12V Phases/
File: 12V_PP.kicad_sch

Title: Power Distribution Board

Size: A4	Date:	**Rev: 2.3**
KiCad E.D.A. 9.0.1		Id: 4/13

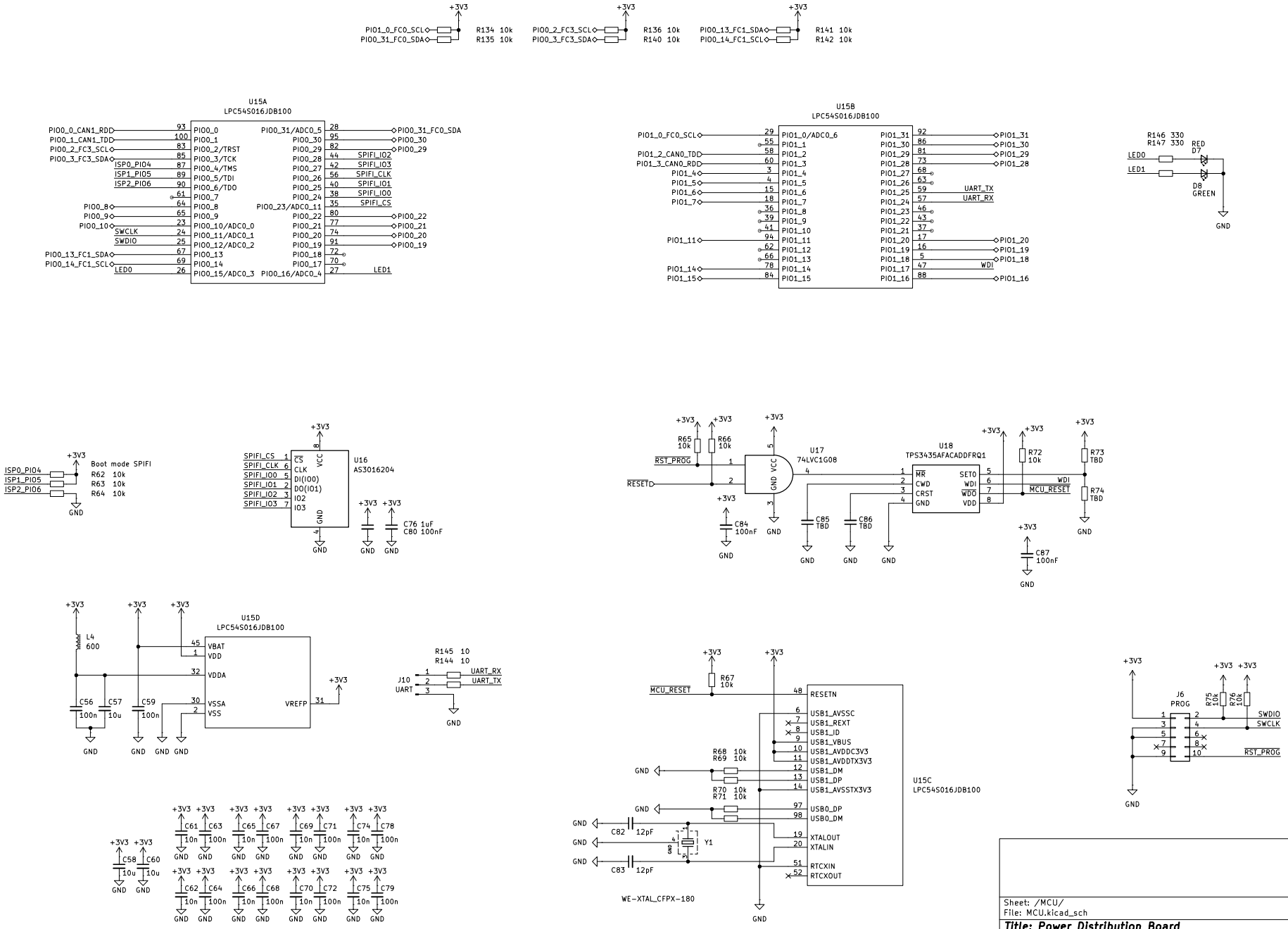

Sheet: /MCU/
File: MCU.kicad_sch

Title: Power Distribution Board

Size: A3	Date:	Rev: 2.3
KiCad E.D.A. 9.0.1		Id: 5/13

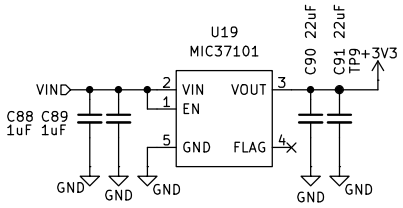

Sheet: /LDO/
File: ldo.kicad_sch

Title: Power Distribution Board

Size: A4	Date:	**Rev: 2.3**
KiCad E.D.A. 9.0.1		Id: 6/13

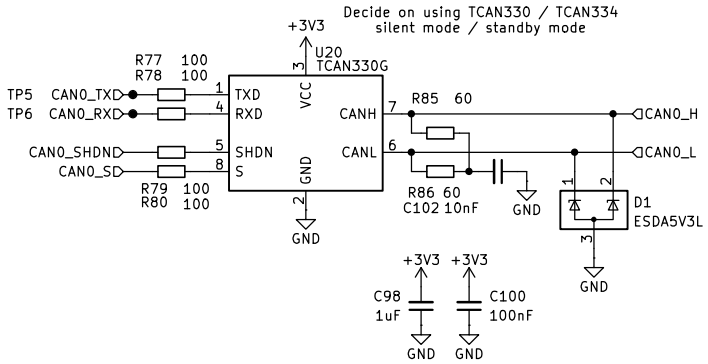

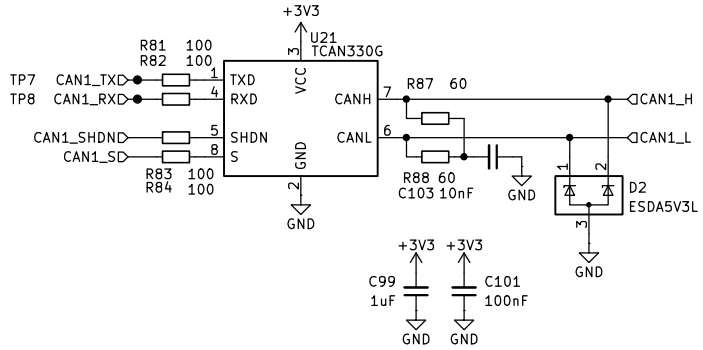

Capacitors on signal paths used to create low pass filters
Defoult: DNP (No Filters)

Sheet: /CAN/
File: CAN.kicad_sch

Title: Power Distribution Board

Size: A4	Date:	**Rev: 2.3**
KiCad E.D.A. 9.0.1		Id: 7/13

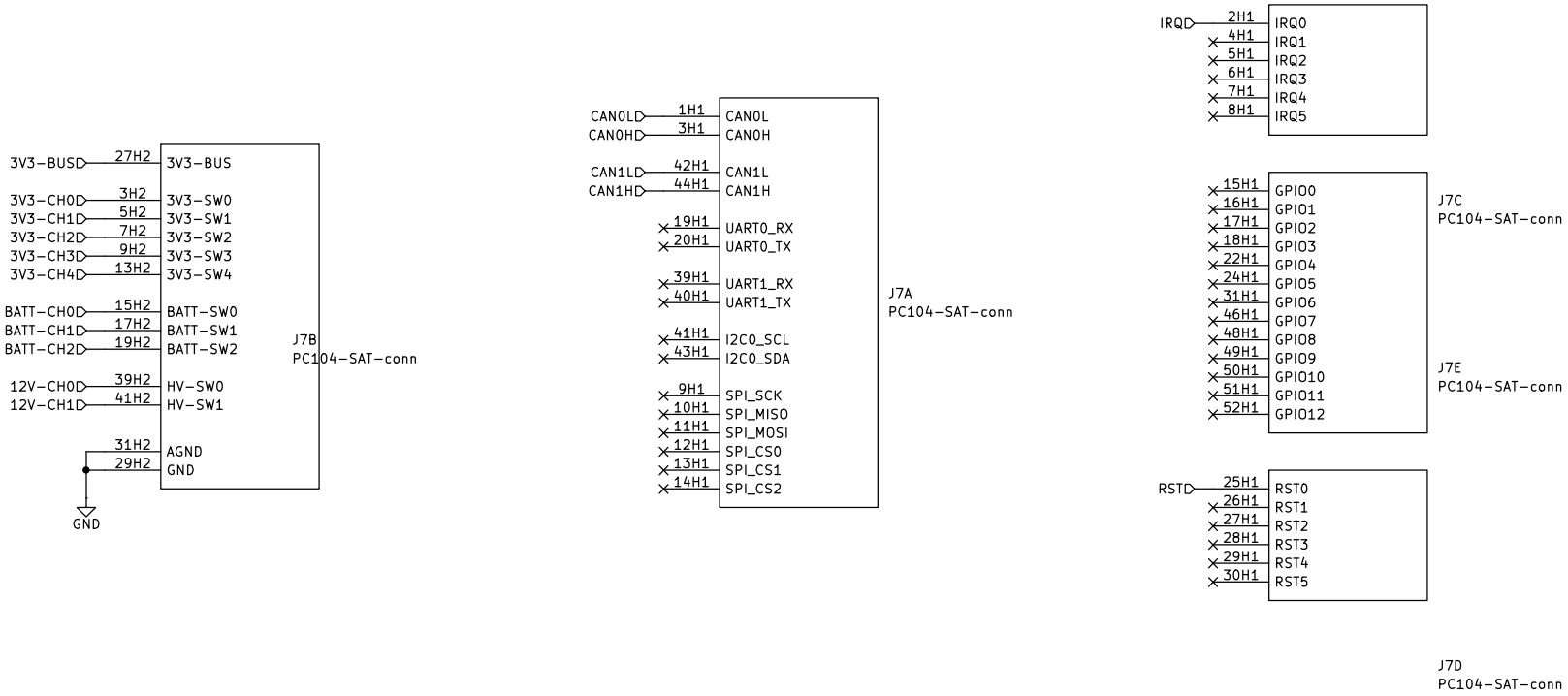

Sheet: /Interconnect/
File: PC104.kicad_sch

Title: Power Distribution Board

Size: A4	Date:	**Rev: 2.3**
KiCad E.D.A. 9.0.1		Id: 8/13

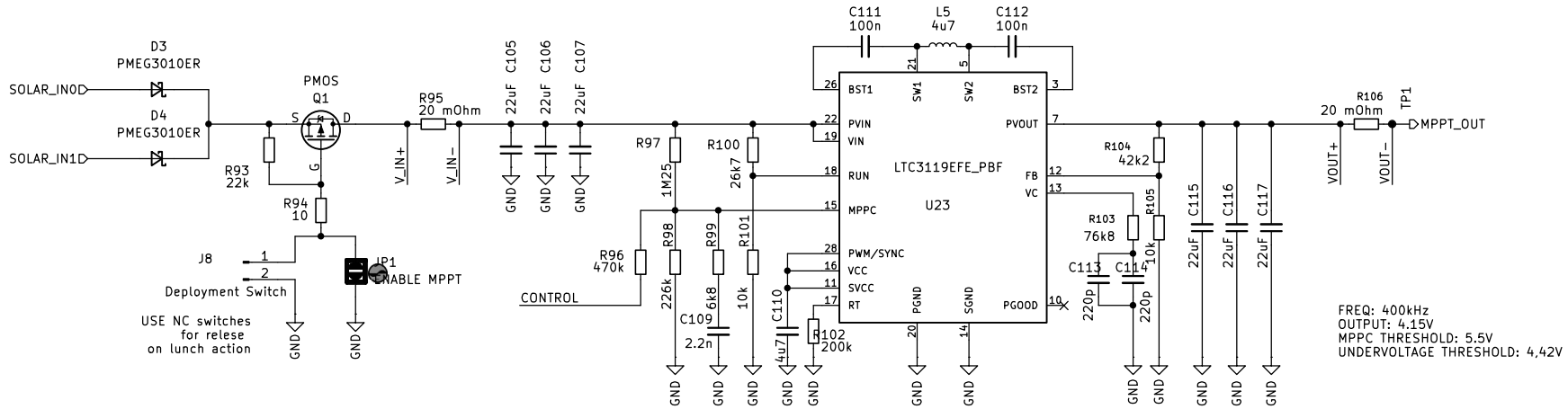

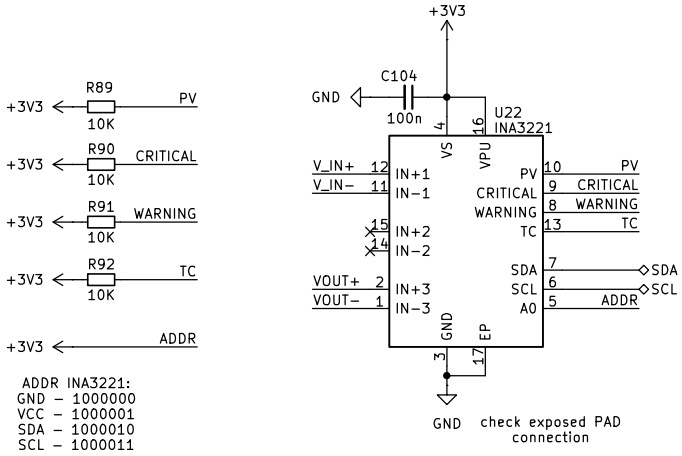

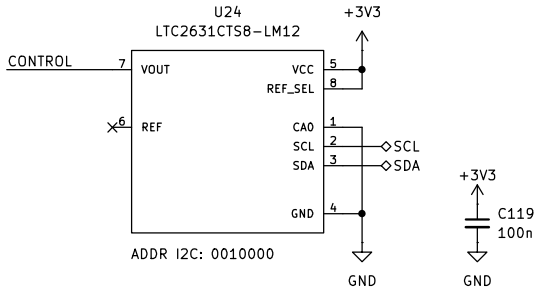

Sheet: /MPPT CH0/
File: MPPT0.kicad_sch

Title: Power Distribution Board

Size: A4	Date:	**Rev: 2.3**
KiCad E.D.A. 9.0.1		Id: 9/13

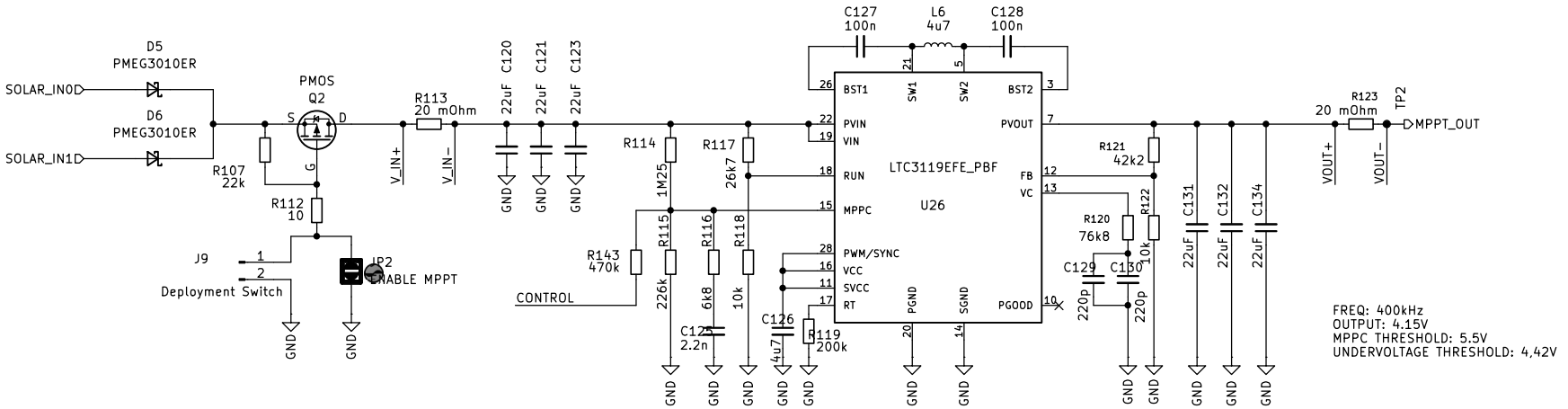

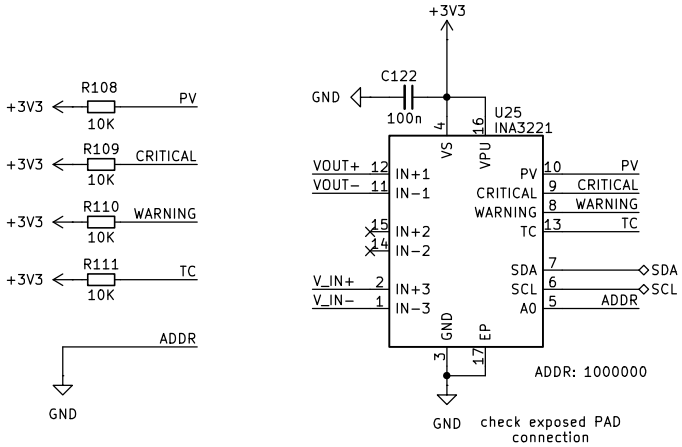

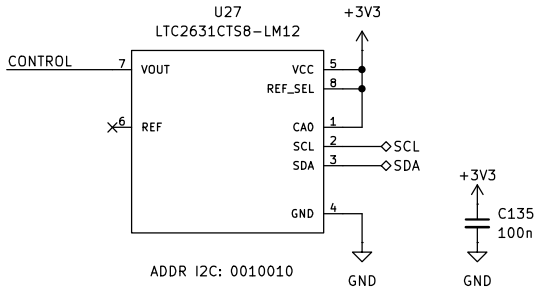

Sheet: /MPPT CH 1/
File: MPPT1.kicad_sch

Title: Power Distribution Board

Size: A4	Date:	**Rev: 2.3**
KiCad E.D.A. 9.0.1		Id: 10/13

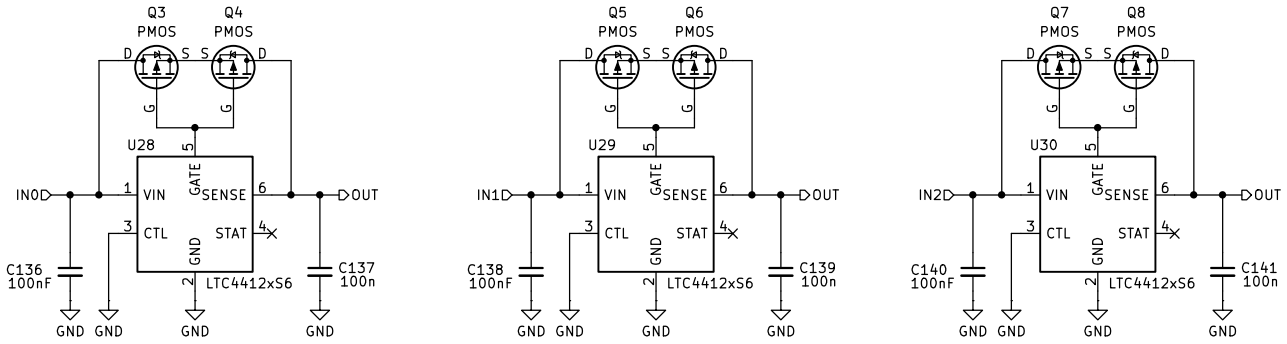

Sheet: /Input Power OR/
File: IN_OR.kicad_sch

Title: Power Distribution Board

Size: A4	Date:	**Rev: 2.3**
KiCad E.D.A. 9.0.1		Id: 11/13

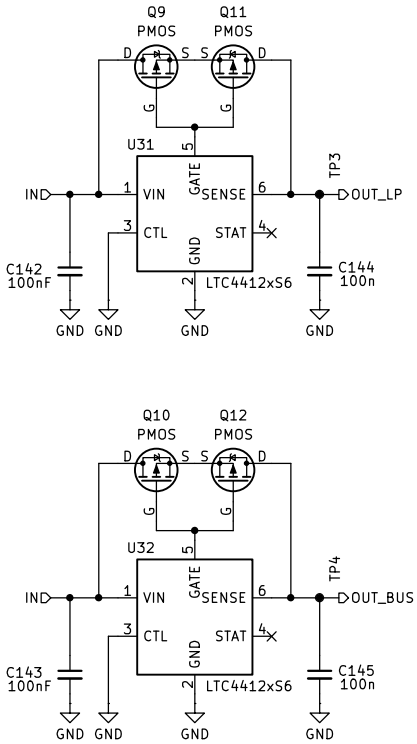

Sheet: /Battery Power Path Bypass/
File: Battery_Bypass.kicad_sch

Title: Power Distribution Board

Size: A4	Date:	**Rev: 2.3**
KiCad E.D.A. 9.0.1		Id: 12/13

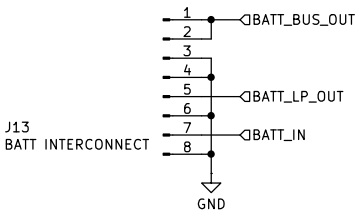

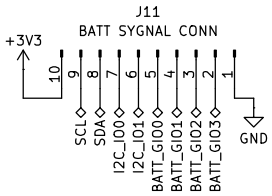

Sheet: /BATT MODULE/
File: Batt_interconnect.kicad_sch

Title: Power Distribution Board

Size: A4	Date:	**Rev: 2.3**
KiCad E.D.A. 9.0.1		Id: 13/13

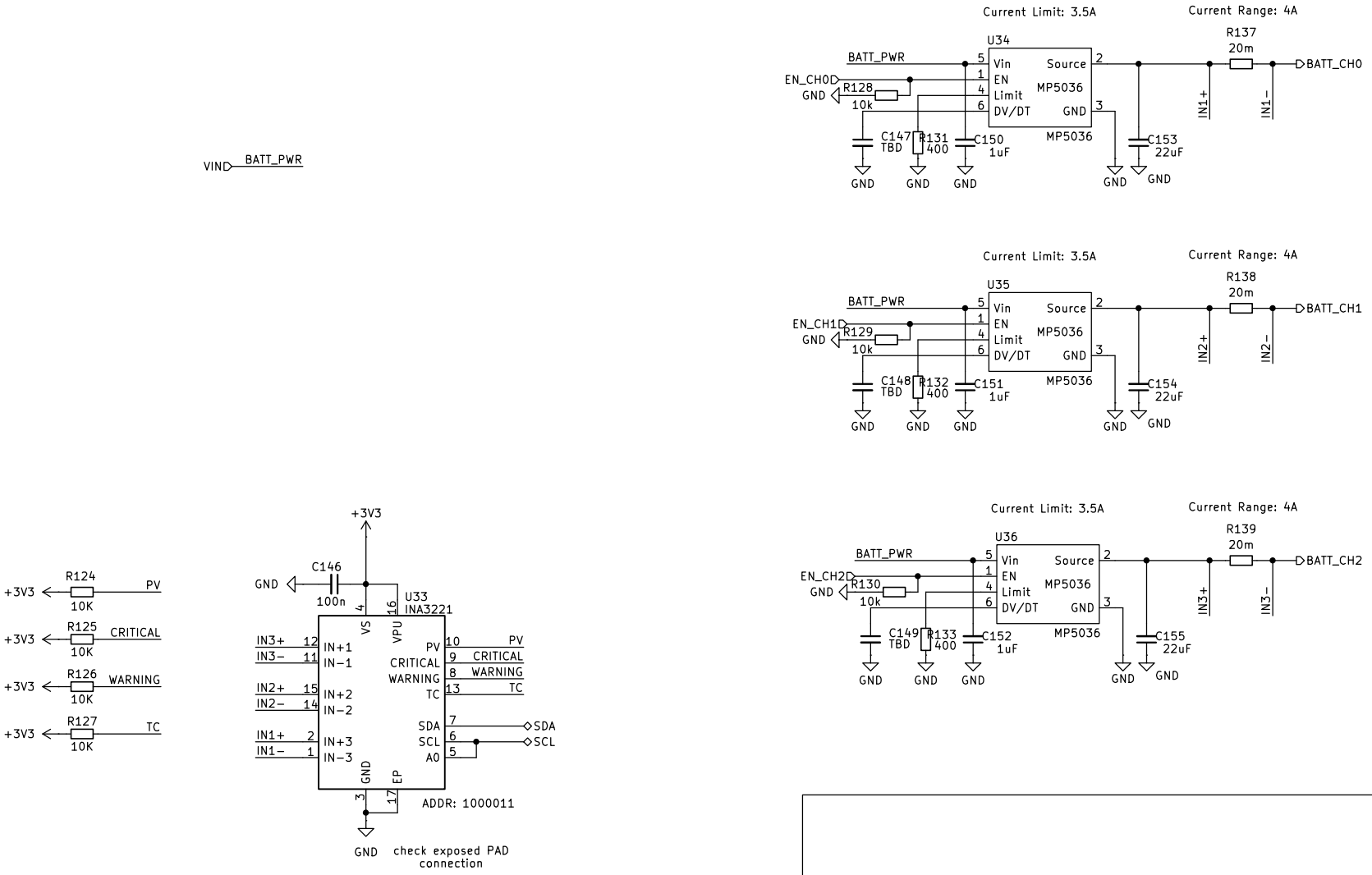

Sheet: /BATT Phases/
File: Batt_PP.kicad_sch

Title: Power Distribution Board

Size: A4	Date:	**Rev: 2.3**
KiCad E.D.A. 9.0.1		Id: 14/13