Design review #1 – Space graded INA

Project developed by:	**SLICE Semiconductor**
Project funded by:	**nlnet foundation**
Document ID:	DR1: Space graded INA
Created by:	Diarmuid Collins
Date created:	10/04/2026
Date modified:	16/04/2026
Revision:	C

Table of Contents

1 General information 2
1.1 Project goal 2
1.2 Specifications 2
1.3 Purpose of Design review #1 (DR1) 2
1.4 Repository details 3
1.5 Open source tools 3
2 Top-Level design description 4
2.1 Architecture 4
3 Testbench description 8
3.1 Testbench details 8
4 Opamp model 11
4.1 Unity gain 11
4.2 Non-inverting (gain = 3) 13
4.3 Inverting (gain = 2) 15
5 INA model 17
5.1 Functionality 17
5.2 Gain error (GE) 18
5.3 Common mode rejection ratio (CMRR) 19
5.4 Noise 21
5.5 Bandwidth (BW) 23
5.6 Offset (os) 24
6 Conclusion 24
7 References 25
8 Revision History 25

1 General information

This project will develop an instrumentation amplifier (INA) with programmable gain (through I2C / SPI interfaces) which achieves high accuracy(< 1% gain error), low noise (< 50nV/rtHz at 1kHz), and high common mode rejection (> 80dB). It will produce an application specific integrated circuit (ASIC) using free and open tools which will be taped out on IHP's 130nm open source PDK, with performance guaranteed across process (slow / fast silicon), voltage (± 5%) and temperature. Because of its high performance, the INA will be applicable to high accuracy sensing applications (pressure, strain, temperature) typical to those found in a wide variety of industry / medical applications. In addition, the INA will be made robust to high radiation environments, making it applicable to low earth orbit / high energy particle applications, where single even latch up can be problematic. The final chip will be characterised as a tangible proof of the maturity of today's free and open source toolchains and their readiness to produce high performance semiconductors.

1.1 Project goal

To show the capability of open source tools to develop industry quality ASICs, verified across industry standard conditions and taped out on silicon from a European fab (IHP).

To validate this goal, targeted performance will match that of an INA from a leading industry vendor (AD8223 [1]).

1.2 Specifications

Below specifications to be met across full process (SS/FF/SF/FS), voltage (±5%) and temperature (-40 → 125C) conditions.

Parameter	Unit	Value	Comment	AD8223
vdda_hv	V	3.3	Analog supply	5
vdda_lv	V	1.5	Digital supply	Not provided
vssa	V	0	Ground	0
Idda_hv	mA	1	Analog supply current	0.6
Power	mW	3.3	Analog power consumption	3
Gain error	%	0.5	INA Accuracy	0.3
|CMRR|	dB	80	Common mode rejection ratio	80
Noise density	nV/rtHz	50	Measured at 1kHz	50
Integrated noise	uVrms	200	Set by temp sense requirements	Not provided
Bandwidth	kHz	50		50

Table 1: ASIC specifications

1.3 Purpose of Design review #1 (DR1)

The purpose of DR1 is to verify feasibility of the proposed project and identify design parameters critical to achieving target specifications. Both these aims are achieved with an accurate model and solid theoretical knowledge of the proposed block.

1.4 Repository details

All material relating to this project can be found in the below publicly available repository:
https://github.com/SLICESemiconductor/Space_grade_Instrumentation_Amplifier_ASIC/tree/main

Screenshot of project landing page is shown in Figure 1.

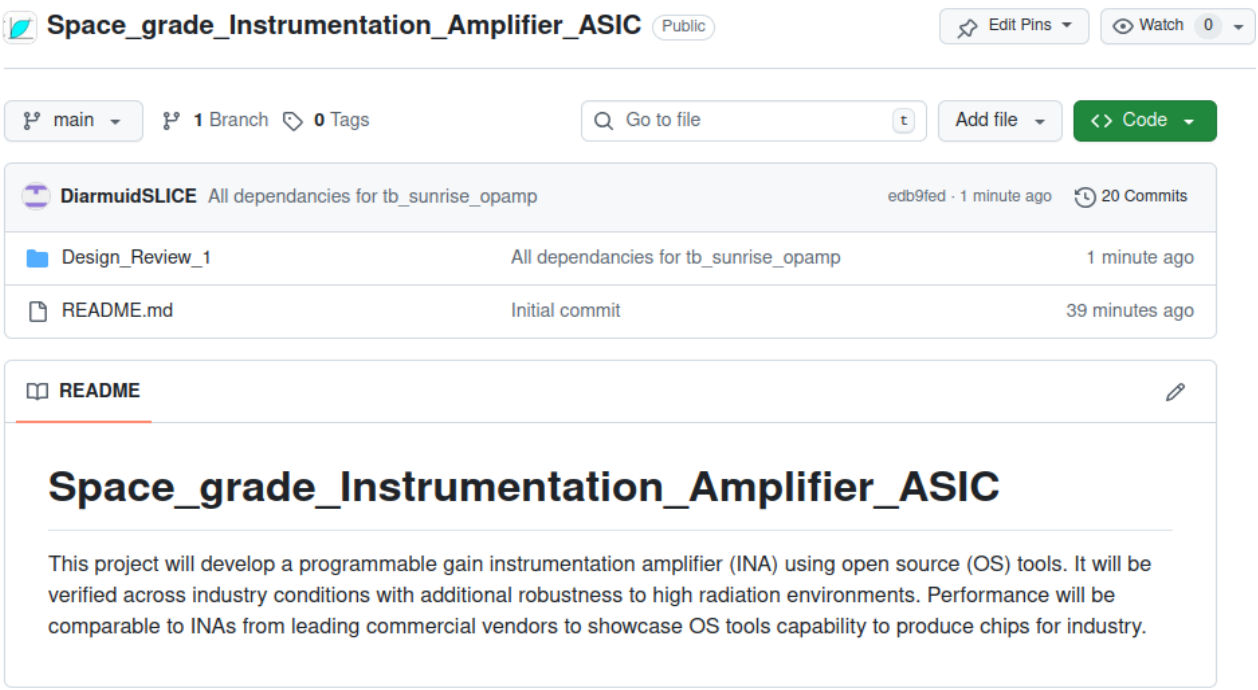

Figure 1 Project landing page

As this document pertains to DR1, all material relating to it is found in the sub directory “Design_Review_1”.

1.5 Open source tools

The open source tools used for DR1 are summarized in Table 2, with links to install each tool provided as references.

Tool	Description
ngspice	Spice simulator [2]
xschem	Schematic / waveform viewer [3]
openVAF	verilogA compiler [4]

Table 2: Open source tools used for DR1

2 Top-Level design description

2.1 Architecture

The INA is based on a conventional continuous time architecture shown in Figure 2.

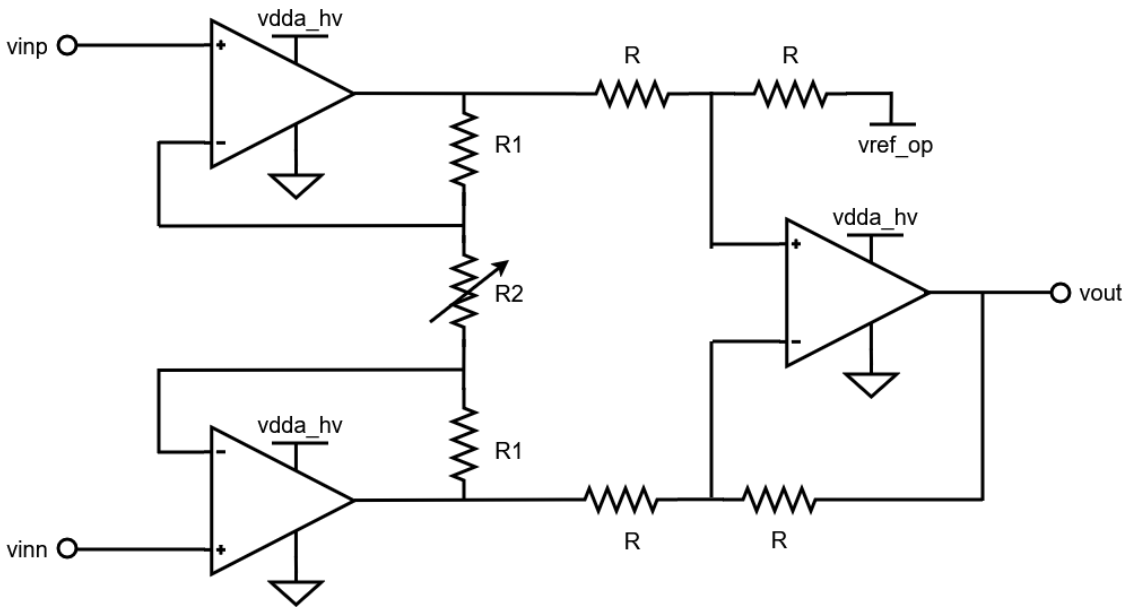

Figure 2 INA top level architecture

This architecture can be best understood by breaking it into the 3 -ve feedback loops which comprise it, as shown in Figure 3.

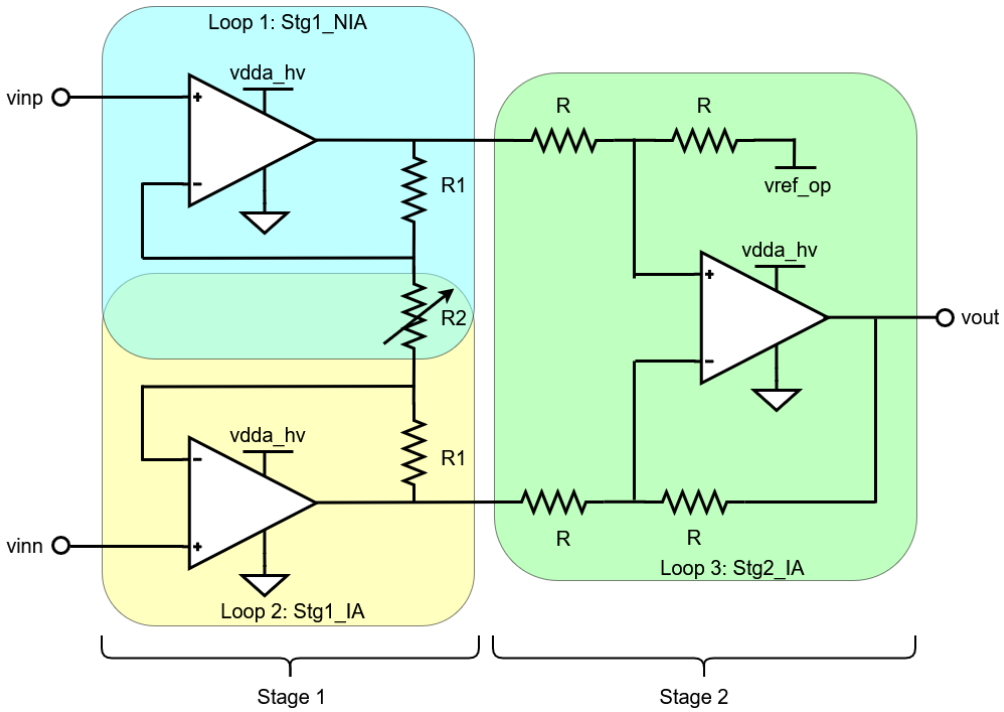

Figure 3 INA top level loops

Treating each loop individually, Figure 4 analyses the non-inverting loop of stage 1.

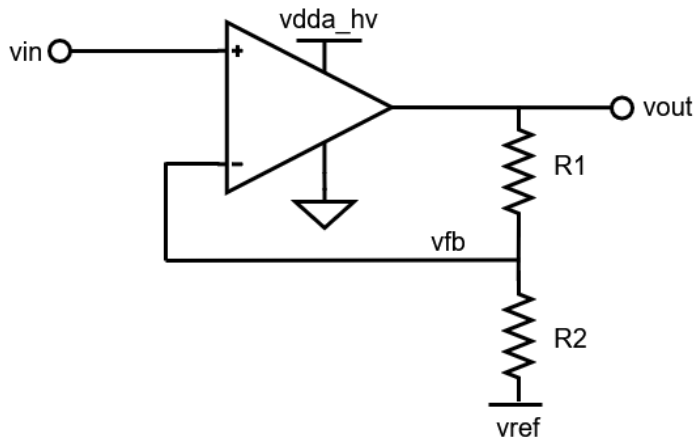

Figure 4 NIA stage 1 loop

Output voltage is expressed as:

$$V_{out} = V_{ref} + \left(\frac{\alpha}{1+\alpha\beta}\right)\left(V_{in} - V_{ref}\right) \dots (1)$$

where $\alpha =$ open loop gain and $\beta =$ transfer function (feedback factor) from vout to vfb

At $V_{ref} = 0$, (1) reduces to its more familiar form of:

$$V_{out} = \left(\frac{\alpha}{1+\alpha\beta}\right) V_{in} \dots (2)$$

The feedback factor is described as:

$$\beta = \frac{R_2}{R_1 + R_2} \dots (3)$$

Substituting (3) into (1), for $\alpha > 10$, simplifies the vout expression to:

$$V_{out} = V_{ref} + \left(1 + \frac{R_1}{R_2}\right)\Delta v_{in} \dots (4)$$

where $\Delta v_{in} = V_{in} - V_{ref} \dots (5)$

At $V_{ref} = 0$, (4) reduces to its more familiar form of:

$$V_{out} = \left(1 + \frac{R_1}{R_2}\right) V_{in} \dots (6)$$

Next, Figure 5 analyses the inverting loop of stage 1.

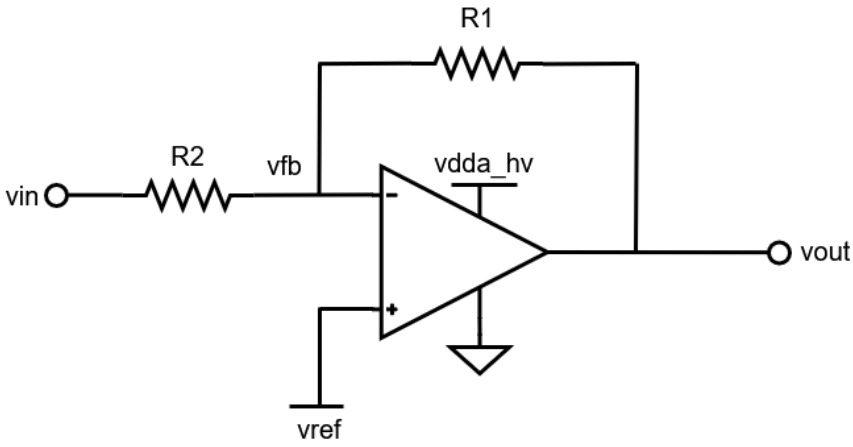

Figure 5 IA stage 1 loop

Output voltage is expressed as:

$$V_{out} = V_{ref} - \gamma\left(\frac{\alpha}{1+\alpha\beta}\right)(V_{in} - V_{ref}) \dots (7)$$

where $\gamma =$ transfer function (attenuation factor) from vin to vfb, expressed as:

$$\gamma = \frac{R_1}{R_1 + R_2} \dots (8)$$

Substituting (8) and (3) into (7), for $\alpha > 10$, simplifies the vout expression to:

$$V_{out} = V_{ref} - \frac{R_1}{R_2}\Delta v_{in} \dots (9)$$

where $\Delta v_{in} = V_{in} - V_{ref} \dots (5)$

Finally, Figure 6 analyses the inverting loop of stage 2.

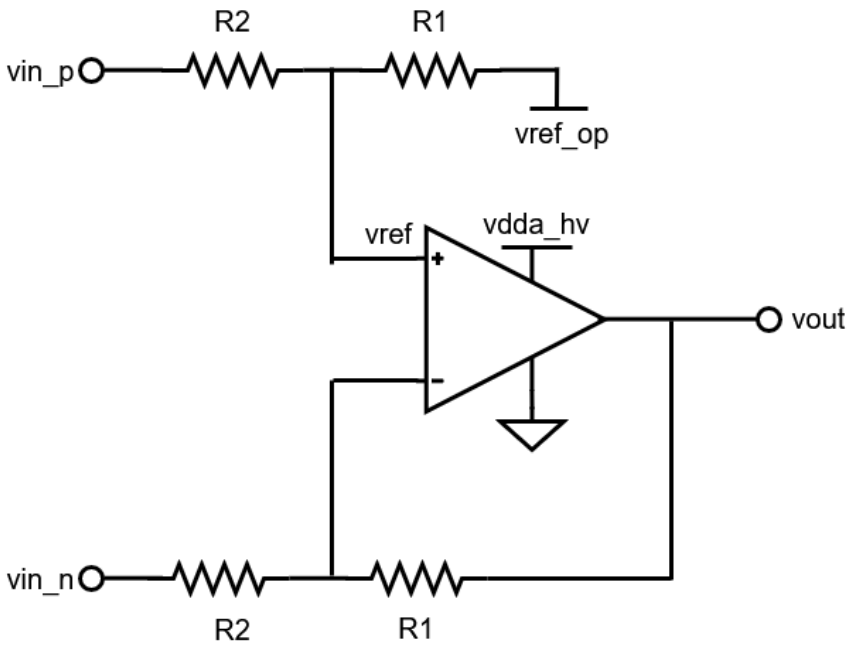

Figure 6 IA stage 2 loop

To express its output voltage, rewrite (9) as:

$$V_{out} = V_{ref}\left(\frac{R_2}{R_1 + R_2}\right) - \frac{R_1}{R_2}V_{in} \dots (10)$$

where V_{ref} can be seen from Figure 6 to be expressible as:

$$V_{ref} = \left[\left(\frac{R_1}{R_1 + R_2}\right)\left(V_{in_p} - V_{ref_{op}}\right)\right] + V_{ref_{op}} \dots (11)$$

Substituting (11) into (10), setting $V_{in} = V_{in_n}$, after some manipulation gives the output voltage of Figure 6 as:

$$V_{out} = \left(V_{in_p} - V_{in_n}\right)\frac{R_1}{R_2} + V_{ref_{op}} \dots (12)$$

Using this theory we can easily derive the gain of the complete INA. The differential output from stage 1 is found by simply subtracting (9) from (4) to give:

$$\Delta v_{out} = V_{ref} + \left(1 + \frac{R_1}{R_2}\right)\Delta v_{in} - \left[V_{ref} - \frac{R_1}{R_2}\Delta v_{in}\right]$$
$$= \left(1 + \frac{2R_1}{R_2}\right)\Delta v_{in} \dots (13)$$

This gives the differential gain from stage 1 as:

$$\frac{\Delta v_{out}}{\Delta v_{in}} = A_{v_{stg1}} = \left(1 + \frac{2R_1}{R_2}\right) \dots (14)$$

Using (12) and setting $R_1 = R_2$, the single ended output from stage 2 is:

$$V_{out} = \left(V_{in_p} - V_{in_n}\right)1 + V_{ref_{op}} \dots (15)$$

This gives the gain from stage 2 as:

$$\frac{\Delta v_{out}}{\Delta v_{in}} = A_{v_{stg2}} = 1 \dots (16)$$

In other words, stage 2 simply acts as a buffer where all the INA gain is achieved by stage 1.

$$A_{v_{INA}} = A_{v_{stg1}}.A_{v_{stg2}} = A_{v_{stg1}} = \left(1 + \frac{2R_1}{R_2}\right) \dots (17)$$

From (17) we can see the INA gain can be tuned with a single resistor (R_2) which is one of main advantages of an INA. For this project, we are achieving tunable gain by implementing R_2 as a 2 bit RDAC, programable through an I2C / SPI interface to achieve 4 different gain settings (1 / 5 / 11 /21).

Note however that although unity gain is offered, the performance specified in Table 1 is not guaranteed at this setting. This is because INA's are never used in unity gain since all output referred error sources translate directly back to the input (i.e. they don't get attenuated when referred back to the input). This is in keeping with industry standards where datasheets rarely provide performance at unity gain.

3 Testbench description

3.1 Testbench details

In total 4 testbenches have been used to model various aspects of the INA and determine certain design parameter necessary to meet in order to achieve the performance specified in Table 1. All testbenches, and their dependencies have been checked into the repository detailed in section 1.3, as shown in Figure 7.

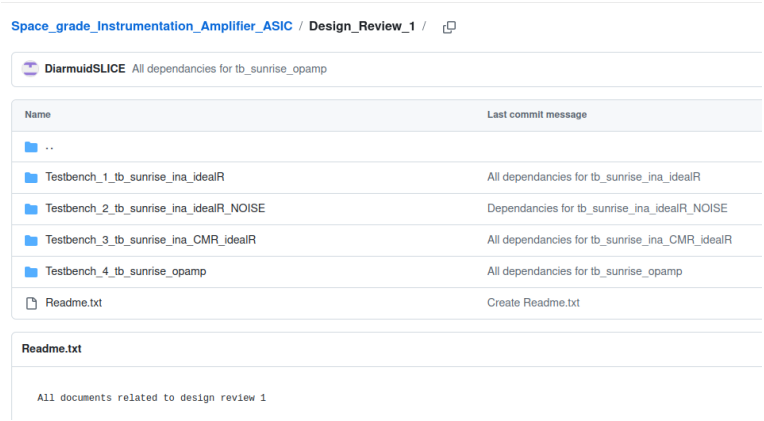

Figure 7 Testbenches checked into the repository

Testbench name corresponds to the top level schematic on which to run the testbench (e.g. In folder “Testbench_1_tb_sunrise_ina_idealR”, run file tb_sunrise_ina_idealR.sch in xschem). To run each testbench, assuming the tools detailed in section 1.5 have been installed, simply download the corresponding folder, open <folder_name>.sch in xschem and hit ‘s’ (for simulate) .

Referring to Figure 7, testbenches 1 → 3 model aspects of the INA directly. Figure 8 shows the schematic modelled in these testbenches.

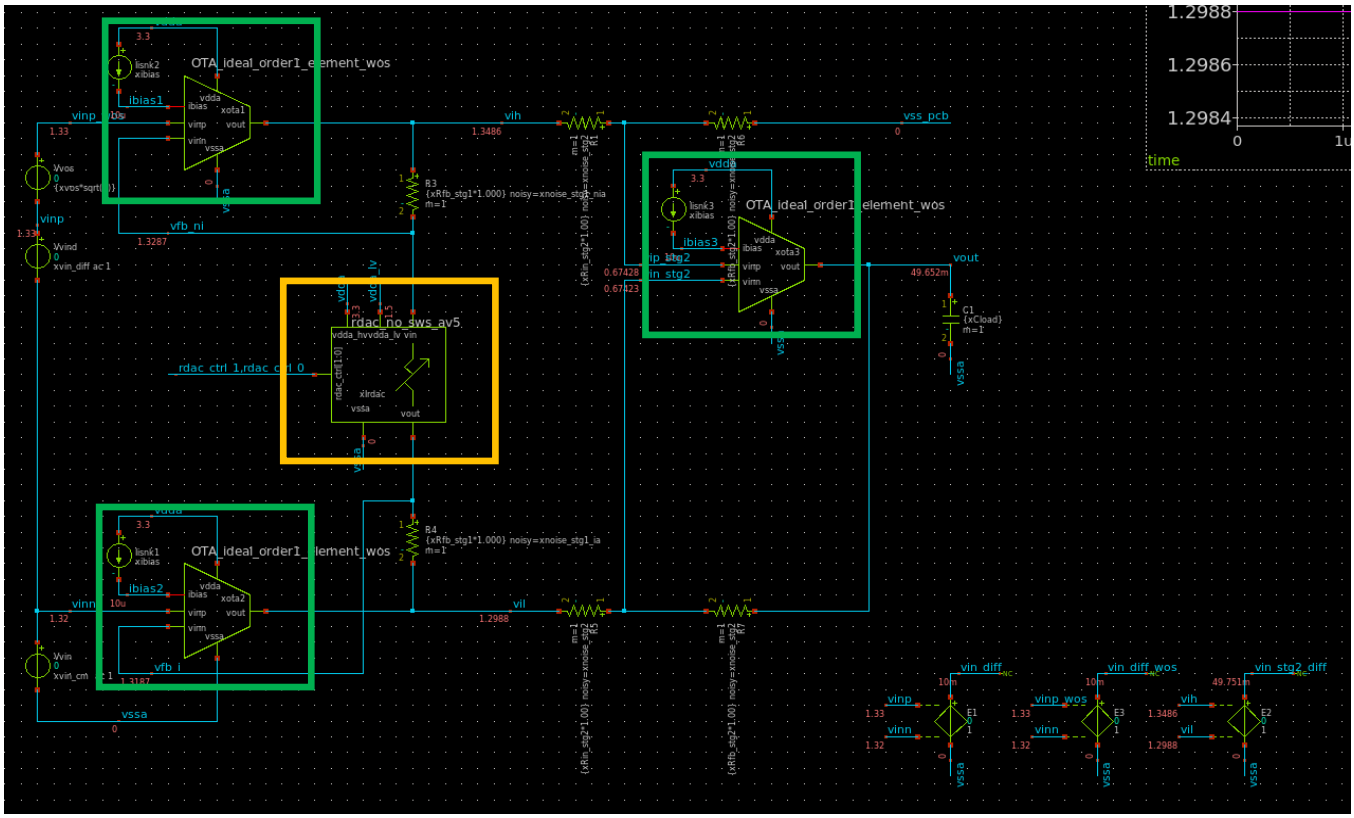

Figure 8 INA testbench schematic

All blocks Figure 8 are modelled as either verilogA or element models (using analogLib devices i.e. ideal devices). It should be noted that since the open source verilogA compilier (openVAF) is so basic (in that it doesn't support much functionality) only ideal switches are modelled using it, all other models are created as element models.

Referring to Figure 8, the opamp models are shown in green boxes. The element model used to describe the opamps is shown in Figure 9.

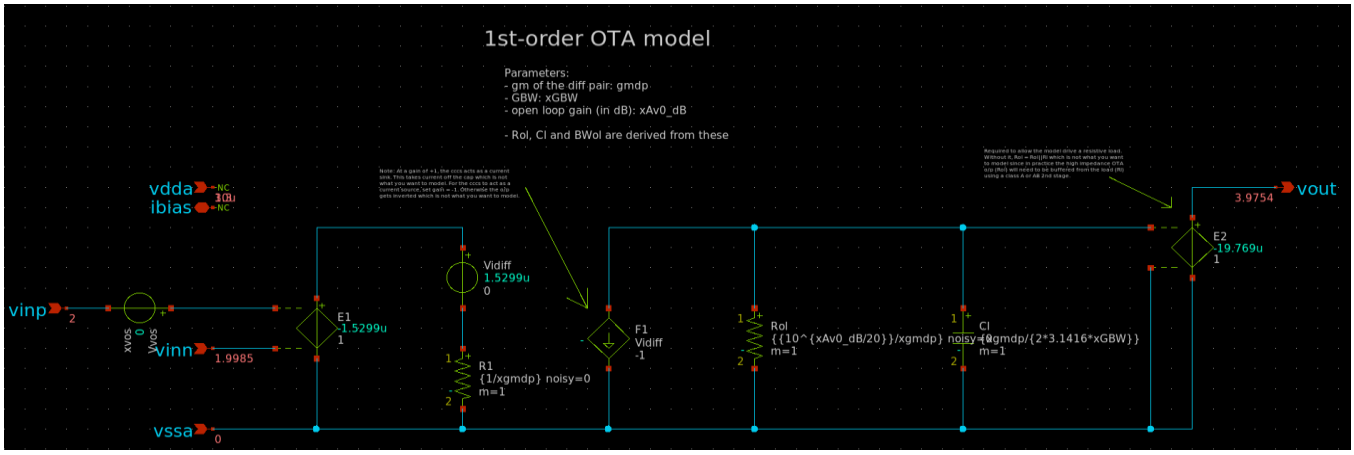

Figure 9 Opamp element model

As can be seen from Figure 9, the opamp is modelled to a 1st-order by first creating an input differential current, which then gets sourced onto an output impedance (R in parallel with C), with the resulting differential voltage being buffered out. All elements are parameterized to enable the user to model any opamp based on gain, GBW and input gm requirements. Note that verification of this model is detailed in section 4.

Referring to Figure 8, the RDAC model is shown in the orange box. This model can be configured to use 1 of 4 different views. The first is shown in Figure 10.

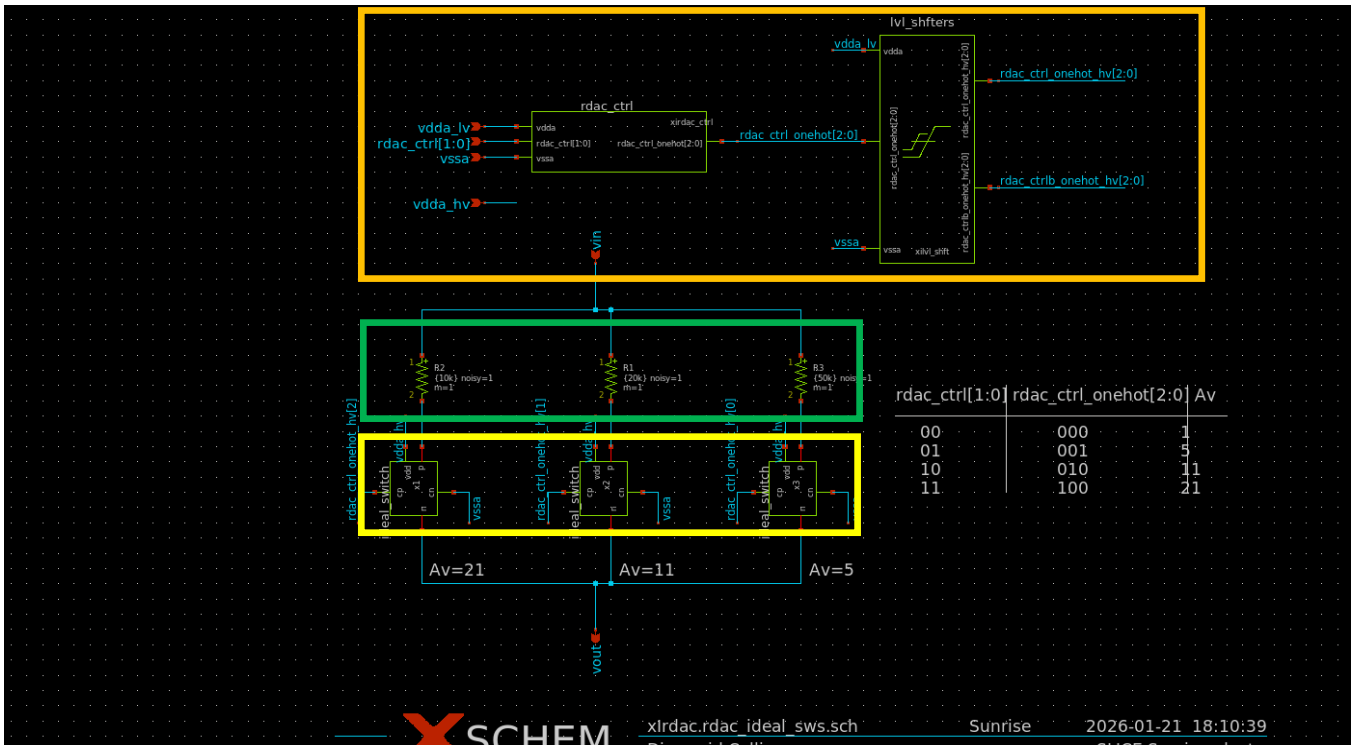

Figure 10 RDAC model implementing programable resistance

Referring to Figure 10, this RDAC model view comprises ideal resistors (green box), logic + level shifters (orange box) and ideal switches (yellow box). As already mentioned, the ideal switches are the only modelling blocks to be implemented in verilogA where their on resistance can be set to some nominal value (e.g. 100Ω).

The next 3 views are shown in Figure 11 → Figure 13.

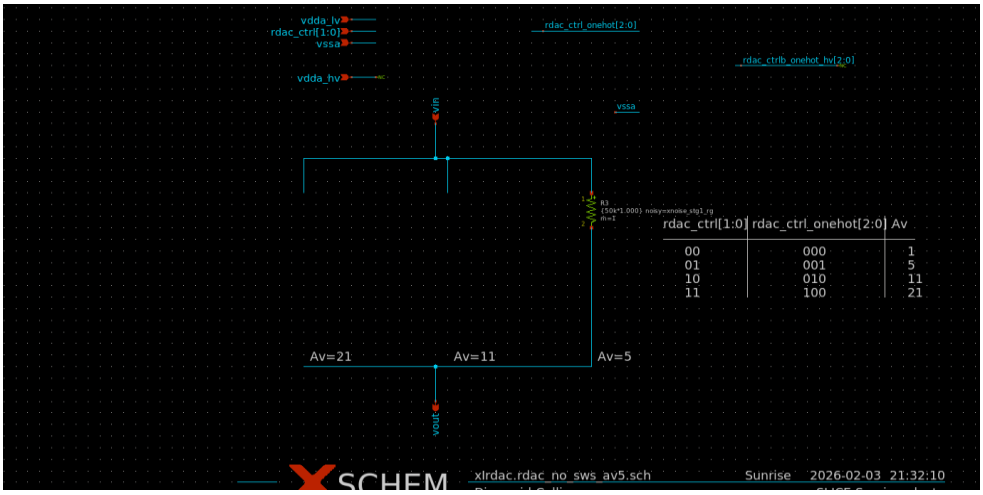

Figure 11 RDAC model for INA gain = 5

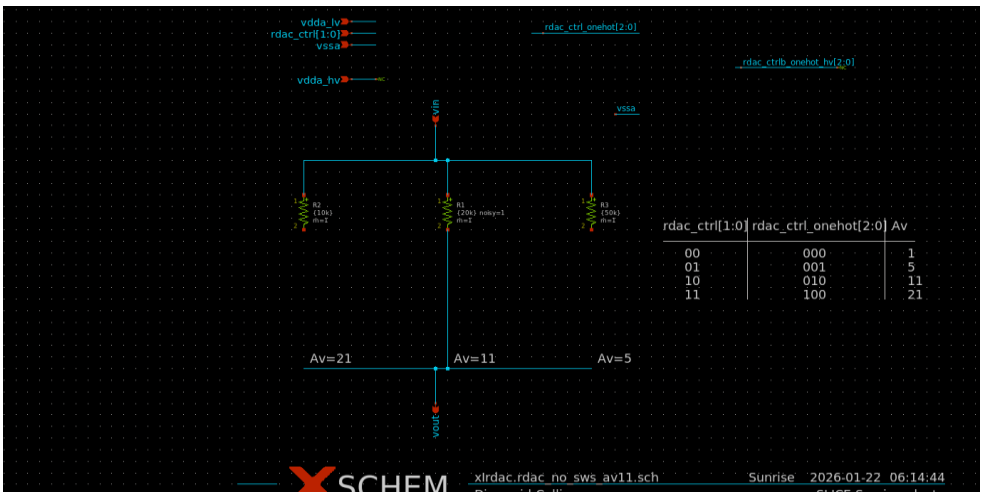

Figure 12 RDAC model for INA gain = 11

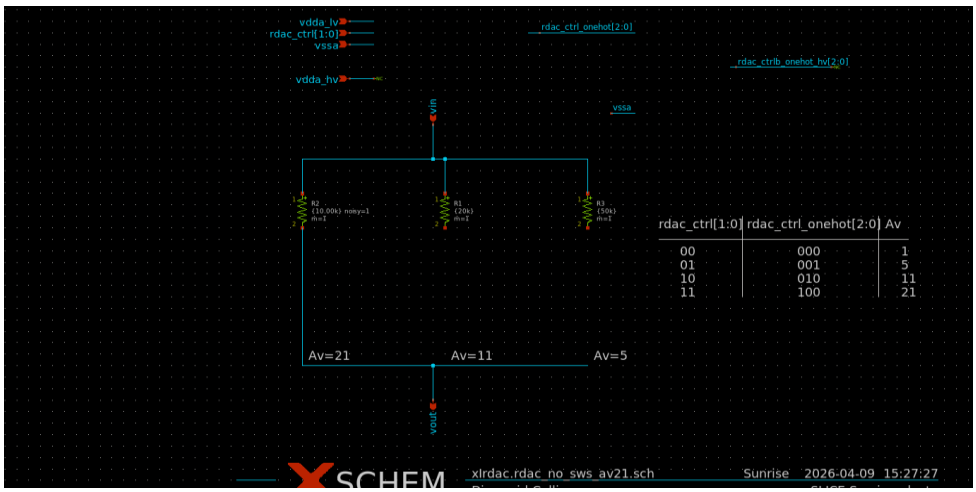

Figure 13 RDAC model for INA gain = 21

Referring to Figure 11 → Figure 13 these views enable the user to model INA characteristics, independent of any non-idealities caused by the switches (namely due to their non-zero on resistance).

Finally, referring back to Figure 8, the only remaining elements included are the ideal resistors which can be configured by the user to model noise and mismatch.

4 Opamp model

To verify the opamp model, it was placed in the following loops:

- Unity gain
- Non inverting with a gain of 3
- Inverting with a gain of 2

In all loops the open loop gain (Av0) of the opamps were set to 60dB (an easy number to work with since it means a gain of 1000, and a number reasonably representative of what can be achieved in practice. The GBW was then set at 3MHz as from prior experience, it is know that this value is required to meeting the BW and integrated noise specs defined in Table 1.

4.1 Unity gain

Figure 14 shows the opamp model placed in unity gain.

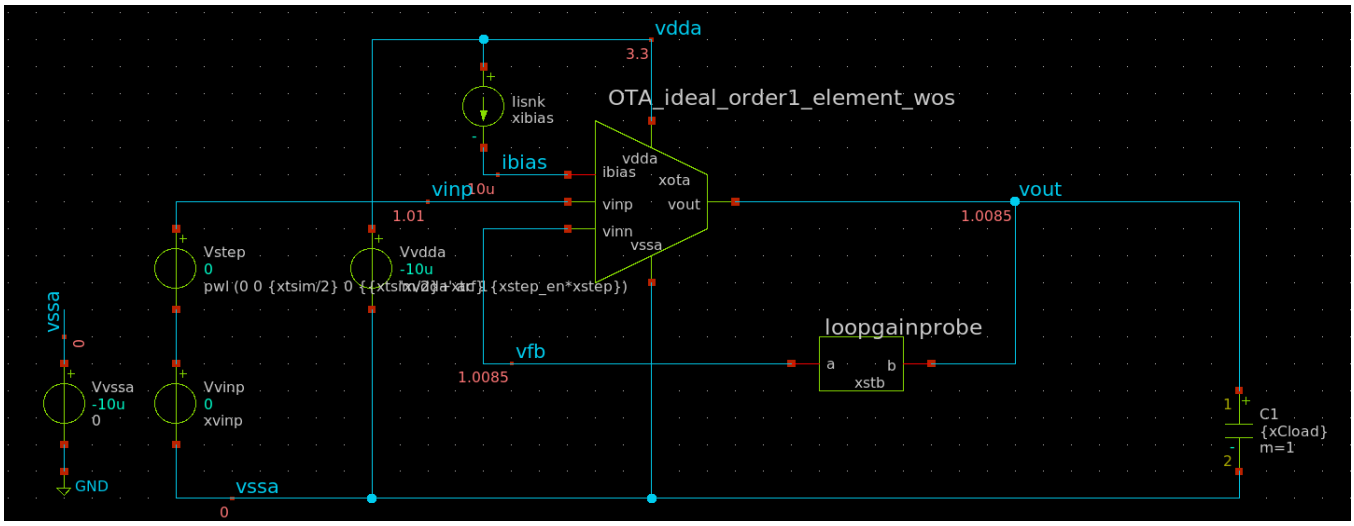

Figure 14 Opamp unity gain model

Figure 15 shows the loop gain response of the loop. From this we can see the following:

- $LG(0) = \alpha\beta = 60dB$ => expected since Av0 ($i.e\ \alpha$) is modelled as 60dB and $\beta = 1$ (unity gain)
- $BW_{cl} = 3MHz$ => expected since GBW is modelled as 3MHz ($BW_{cl} = \beta GBW$)
- Magnitude and phase responses are clearly 1st order (20dB roll off / 90˚ phase shift)

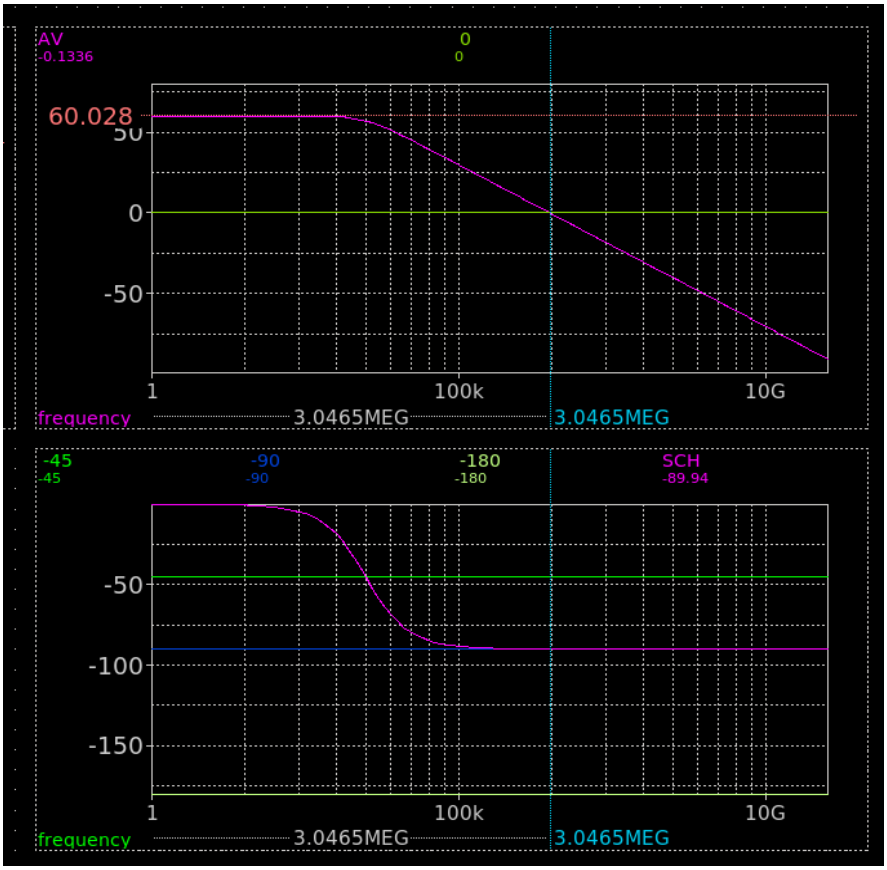

Figure 15 Opamp loop gain response in unity gain

Figure 16 and Figure 17 show the step response of the loop. From this you can see the following:

- 95% settling time = 159ns => Expected since $BW_{cl} = 3MHz$. Justification is as follows:

$$BW_{cl} = 1/2\pi RC = 1/2\pi\tau \;=>\; \tau = 1/2\pi BW_{cl} \;\ldots (18)$$

  - ⇨ For $BW_{cl} = 3MHz$, $\tau = 53ns$
  - ⇨ For a 1st order system, 95% settling occurs in 3τs
  - ⇨ A 1st order system with $BW_{cl} = 3MHz$, exhibits 95% settling in 159ns

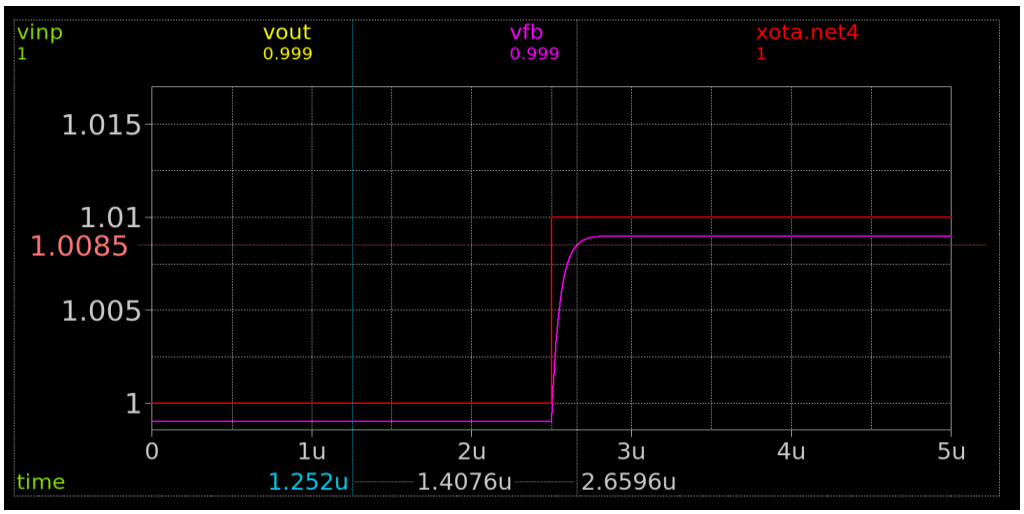

Figure 16 Step response in unity gain

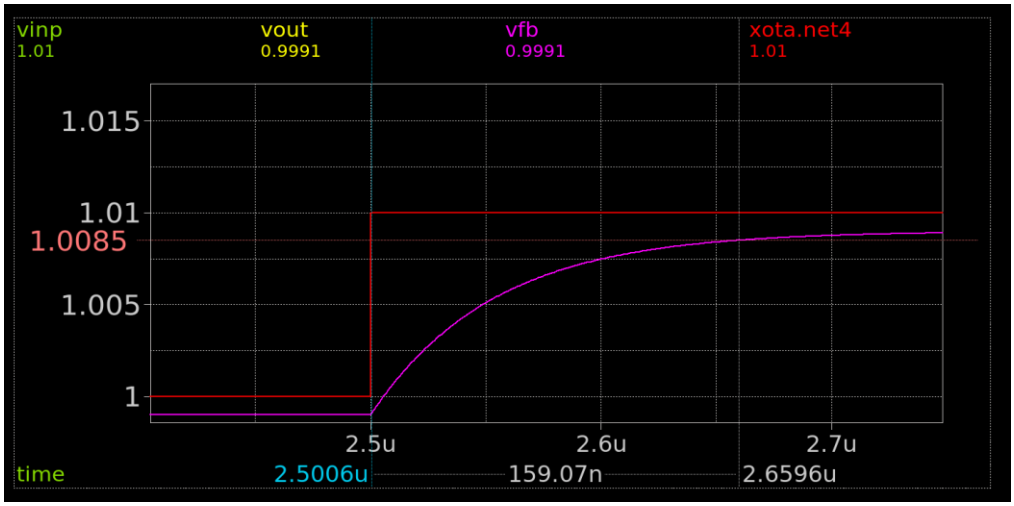

Figure 17 Close up of step response in unity gain

The results of this section confirm the model is working exactly as predicted by theory.

4.2 Non-inverting (gain = 3)

Figure 18 shows the opamp model placed in a non-inverting loop with gain set to 3.

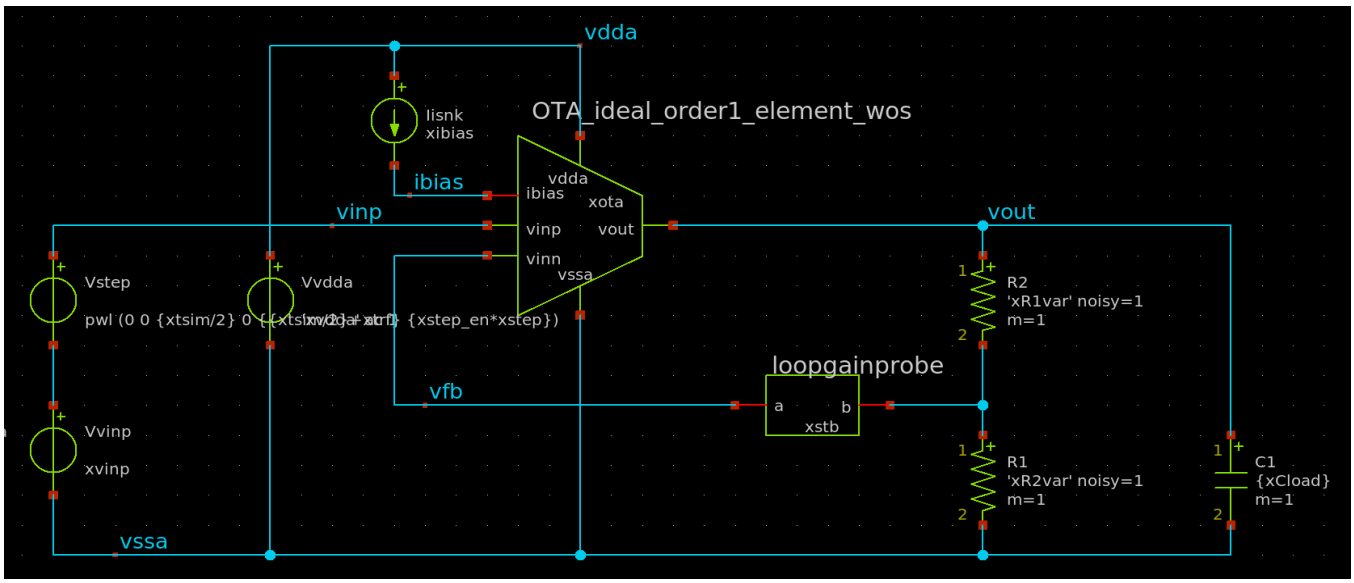

Figure 18 Opamp non-inverting loop model

Figure 19 shows the loop gain response of the loop. From this we can see the following:

- $LG(0) = \alpha\beta \approx 50dB$ => expected since Av0 ($i.e\ \alpha$) is modelled as 60dB and $\beta = 1/3$ ($20\log_{10}(1000/3) = 50.45dB$)
- $BW_{cl} = 1MHz$ => expected since GBW is modelled as 3MHz and $\beta = 1/3$ ($BW_{cl} = \beta GBW$)
- Magnitude and phase responses are clearly 1st order (20dB roll off / 90˚ phase shift)

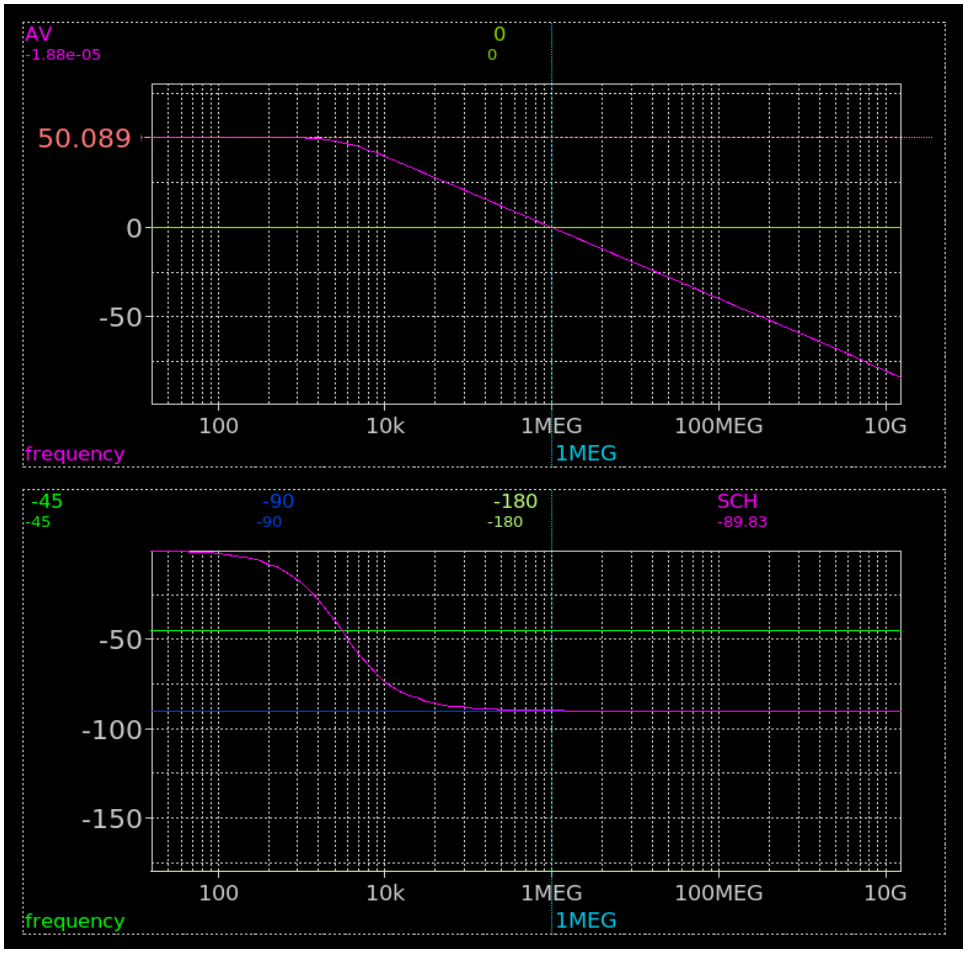

Figure 19 Opamp loop gain response in a non-inverting loop

Figure 20 and Figure 20 show the step response of the loop. From this you can see the following:

- 95% settling time = 483ns => Expected since $BW_{cl} = 1MHz$. From (18) we can see that:
  - ⇨ For $BW_{cl} = 1MHz$, $\tau = 159ns$
  - ⇨ A 1st order system with $BW_{cl} = 1MHz$, exhibits 95% settling in 477ns

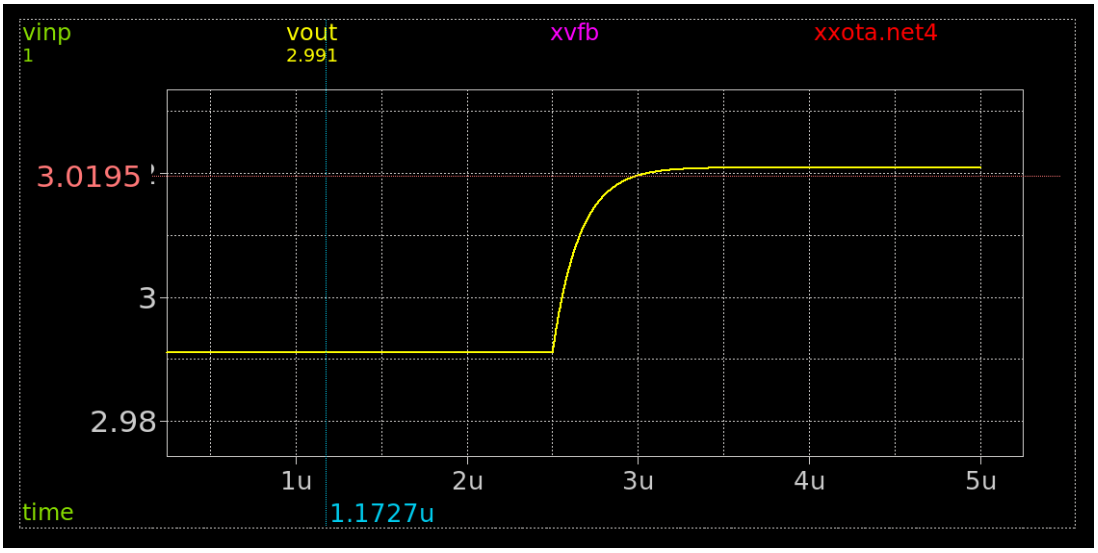

Figure 20 Step response of the non-inverting loop

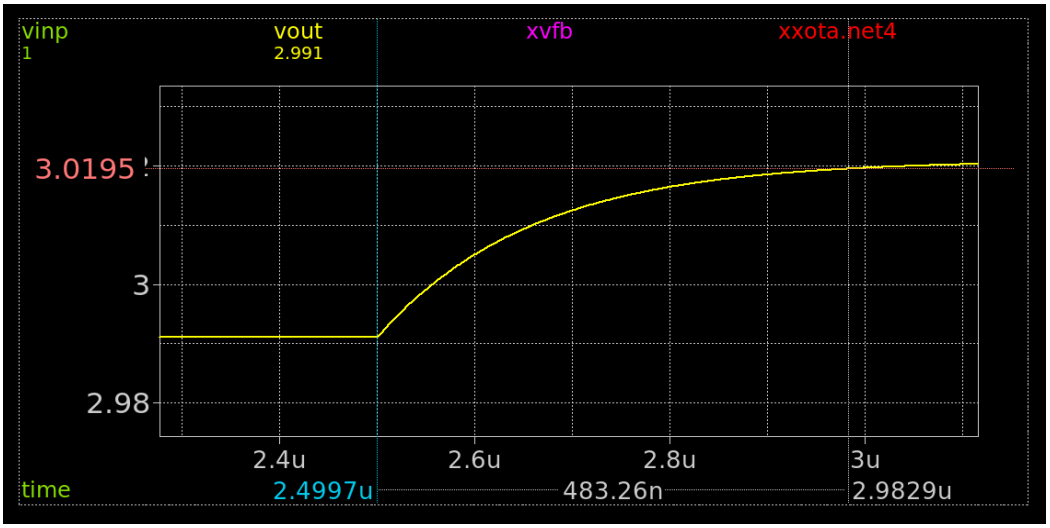

Figure 21 Close up of the step response of the non-inverting loop

The results of this section confirm the model is working exactly as predicted by theory.

4.3 Inverting (gain = 2)

Figure 22 shows the opamp model placed in an inverting loop with gain set to 2.

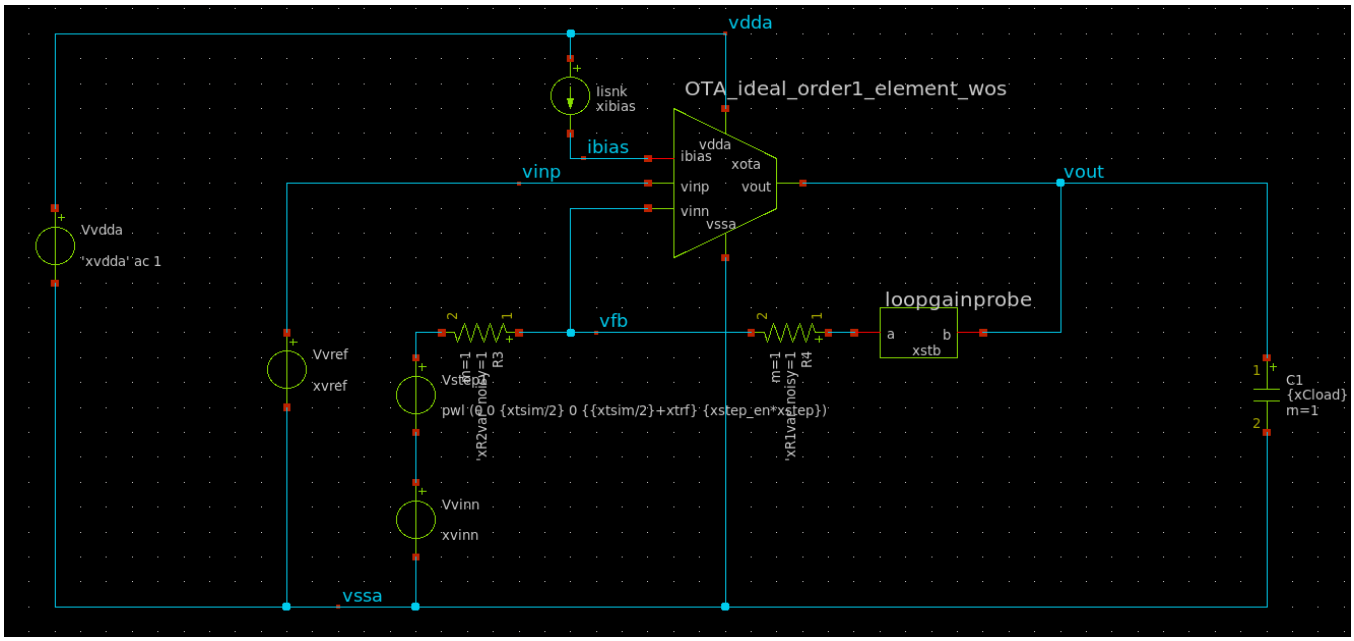

Figure 22 Opamp loop gain response in an inverting loop

Figure 23 shows the loop gain response of the loop verifying it to display identical loop dynamics as the non-inverting loop ($LG(0) \approx 50dB$ and $BW_{cl} = 1MHz$). This is expected since the α and β values of both loops are identical.

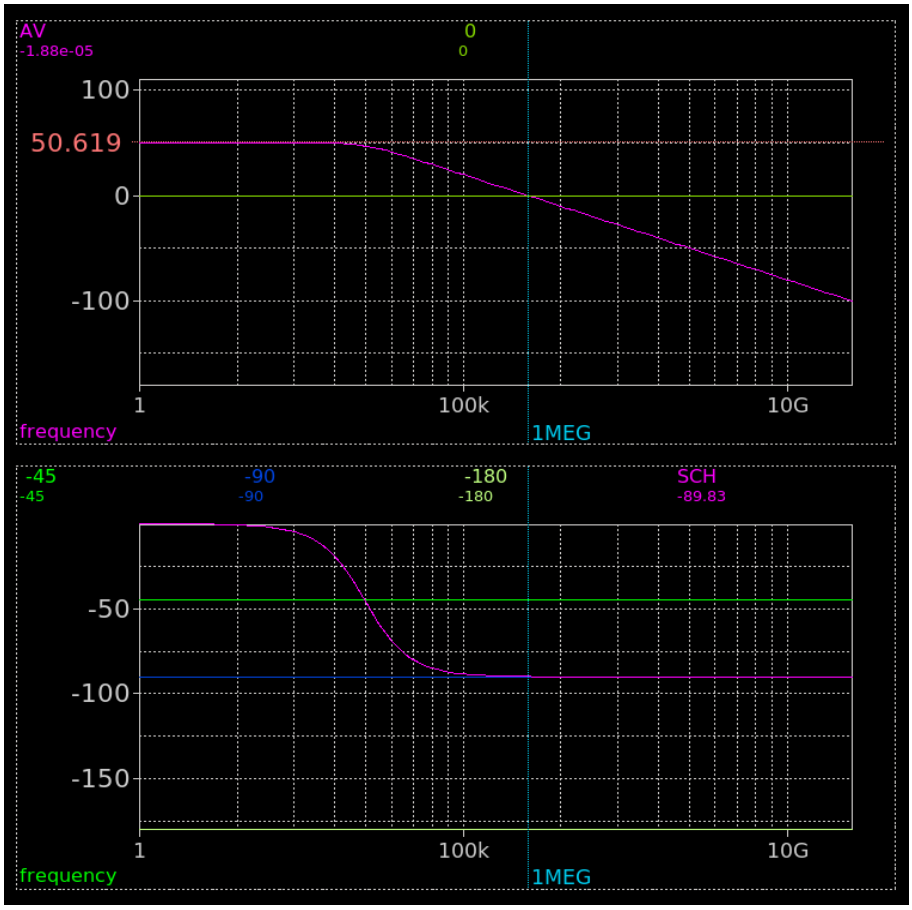

Figure 23 Opamp loop gain response in an inverting loop

Figure 24 and Figure 25 show the step response of the loop. From this you can see the same 479ns 95% settling as the non-inverting loop, which is expected since both loops have the same BW ($1MHz$).

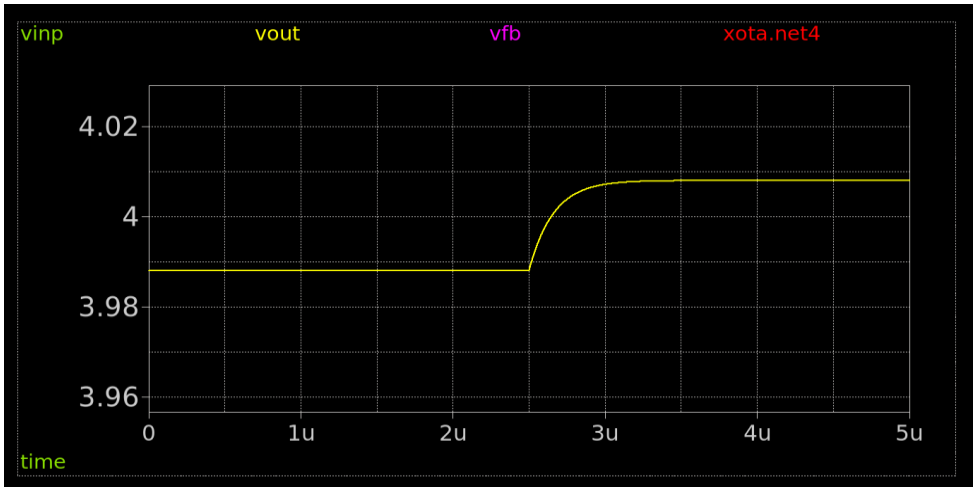

Figure 24 Step response of the inverting loop

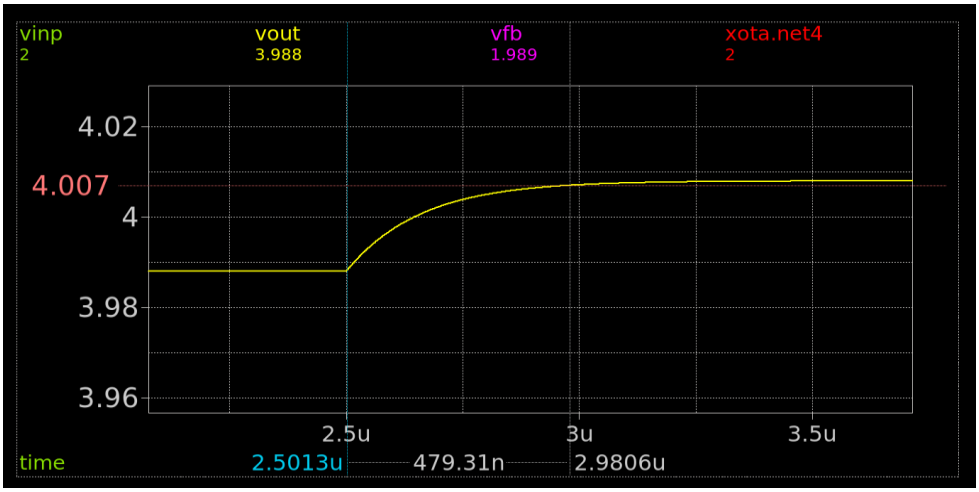

Figure 25 Close up of the step response of the inverting loop

The results of this section confirm the model is working exactly as predicted by theory.

5 INA model

The INA model is used for the following:

- Confirm our understanding of its functionality
- Determine design requirements to meet the GE, CMRR and noise specs of Table 1
- Confirm BW spec can be met
- Provide a basic offset characterisation

5.1 Functionality

The first purpose of the INA model is to verify the INA theory developed in section 2.1. To achieve this the following values were inserted into the model:

- $V_{ref} = 1.32V, \Delta v_{in} = 10mV \rightarrow V_{in} = 1.33V, \alpha = 60dB, \beta_{NIA_{stg1}} = 1/3 = \beta_{IA_{stg1}}, \beta_{IA_{stg2}} = 1/2 = \gamma_{stg2}, \gamma_{stg1} = 2/3, V_{ref_{op}} = 0$

Note: The interested reader will observe that setting $\beta_{NIA_{stg1}} = 1/3 = \beta_{IA_{stg1}}$ achieves a total INA gain of 5.

Inserting the above values into (1) give the voltage at the output of Stg1_NIA = 1.3499. As shown in Figure 26, the model reports 1.3486 (visible in the green box on node “vih”). To arrive at this value we must account for the fact that the bottom of R2 is referred to 1.32V while the opamp itself is referred to 0V. This creates an error at the output of the loop which gets attenuated by a factor of α by the loops -ve feedback. Therefore, by subtracting $1.32/1000$ from 1.3499, we arrive at 1.3486.

Inserting the above values into (7) give the voltage at the output of Stg1_IA = 1.3. Accounting for the shift of $1.32/1000$ brings us to 1.2988, which is in agreement with the model which reports 1.2988 (visible in the orange box on node “vil”).

Subtracting these two outputs gives 49.8mV. Since $\Delta v_{in} = 10mV$ this implies a gain of 4.98. The reason it is slightly less than the intended gain of 5 is due to gain error as a result of the finite α, which will be more thoroughly explored in the next section.

To determine the output of stage 2 (and the INA itself) we must expand (12) to include the impact of a finite α. (12) is repeated below for reference:

$$V_{out} = \left(V_{in_p} - V_{in_n}\right)\frac{R_1}{R_2} + V_{ref_{op}} \ldots (12)$$

This is expanded to include the impact of a finite α in (19).

$$V_{out} = \left(V_{in_p} - V_{in_n}\right)\gamma\left(\frac{\alpha}{1+\alpha\beta}\right) + V_{ref_{op}} \ldots (19)$$

Inserting the testbench values into (19), for $V_{in_p} = 1.3486$ and V_{in_n} = 1.2988, give the voltage at the output of Stg2_IA = 49.7mV. This is in agreement with the model which reports 49.652mV (visible in the blue box on node “vout”).

Note: Rounding errors have resulted in the minor discrepancy between 49.7mV and 49.652mV.

Once again it is worth nothing that 49.652mV implies a gain of 4.9652 which is slightly less than the intended gain of 5 (due to gain error as a result of the finite α, which will be more thoroughly explored in the next section).

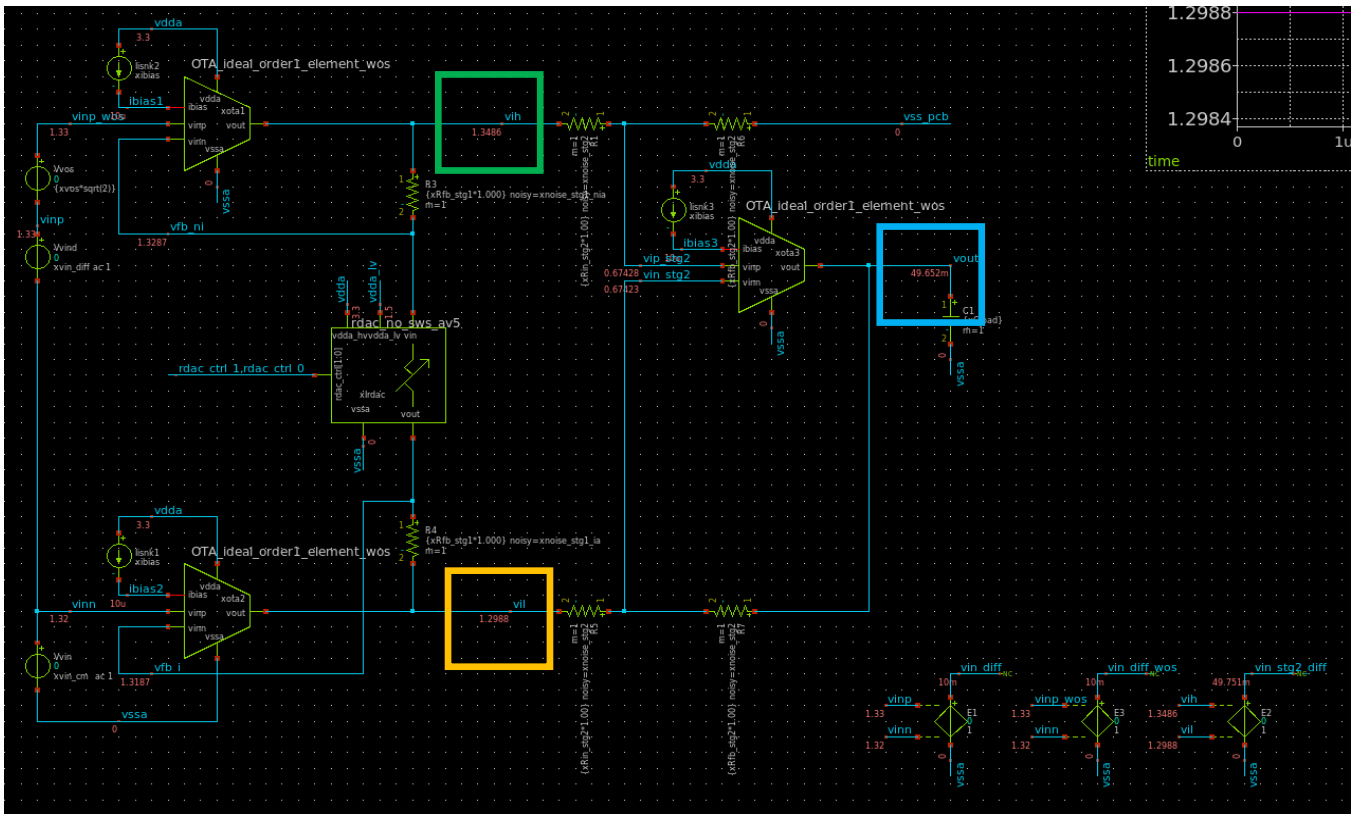

Figure 26 Voltages reported by the model with gain set to 5

The results of this section confirm both our understanding of INA fundamentals, and that the model is working exactly as predicted by this theory.

5.2 Gain error (GE)

Without diving into details, the gain error of this type of INA is expressed as:

$$GE = \frac{1}{LG_{stg1}} + \frac{1}{LG_{stg2}} + 'X' \ldots (20)$$

where:

- $LG_{stg1,2} = \alpha\beta_{stg1,2}$
- $'X'$ = gain error due to the finite on resistance of the switches in the RDAC

The impact of $'X'$ can be understood by modifying the INA gain equation in (17) to (21):

$$A_{v_{INA}} = \left(1 + \frac{2R_1}{(R_2 + r_{on})}\right) \ldots (21)$$

E.g. Set $R_1 = 100k\Omega, R_2 = 50k\Omega$ => $A_{v_{INA}}(r_{on} = 0) = 5$ but $A_{v_{INA}}(r_{on} = 100) = 4.992$ => GE = 0.16% results

Following from this example, $'X'$ in (20) can be approximated (albeit an over approximation) as r_{on}/R_2 allowing us to fully express (20) as:

$$GE \approx \frac{1}{LG_{stg1}} + \frac{1}{LG_{stg2}} + \frac{r_{on}}{R_2} \ldots (22)$$

This expression is confirmed by the model using the following values:

- $\alpha = 1000, \beta_{stg1} = 1/5, \beta_{stg2} = 1/2, r_{on} = 100\Omega, R_2 = 50k\Omega$

Inserting the above values into (22) gives GE = 0.9%. As shown, the model reports 0.854%.

```
ge_stg1_per = -6.55600e-01
--
ge_stg2_per = -1.99600e-01
--
ge_ina_per = -8.53800e-01
```

The reason for the discrepancy is (22) approximates $'X'$ from (21) as r_{on}/R_2 while the model does no such approximation. By simply inserting values into (21) you can arrive at exactly what the model reports.

The results of this section confirm both our understanding of INA GE, and that the model is accurately predicting it. In addition it shows how difficult it is to achieve the 0.5% GE spec in Table 1. Looking closer at (22) we can see:

$$GE \propto 1/\alpha, r_{on} \ldots (23)$$

We can't practically expect to get r_{on} lower than 100Ω across PVT without switches becoming so large as to degrade our AC performance. This leaves α as the only parameter to drive down our GE further. Working through (22) shows setting $\alpha = 80dB$ will achieve GE < 0.5%. The model confirms this, showing it to achieve 0.23%.

```
ge_stg1_per = -2.09400e-01
--
ge_stg2_per = -2.00000e-02
--
ge_ina_per = -2.29400e-01
--
```

An 80dB open loop gain requirement is a high value for an opamp but achievable with careful design.

These results demonstrate the importance of accurate modelling to arrive at the required design parameters to meet challenging specs, and in doing so showcase the value of the INA model.

5.3 Common mode rejection ratio (CMRR)

In section 2.1, we mentioned one of the main advantages of an INA is being able to set the gain with a single resistor (R2). A second advantage is that the first stage doesn't contribute to CMRR at all (the 3rd and final being the high impedance it presents to the inputs). This is because the current through R2 doesn't change with the common mode, making stage 1's differential output completely independent on common mode level. As a result, INA CMRR is completely determined by stage 2, specifically by its resistors. Why this is an advantage is because stage 2's resistors are the same making it easier to obtain high levels of matching amongst them.

To further explore the CMRR of stage 2, with reference to Figure 6 we can express the gain through it as:

$$v_{out} = v_{in_p} G_p - v_{in_n} G_n \ldots (24)$$

where:

- G_p = transfer function from $v_{in_p} \rightarrow v_{out}$
- G_n = transfer function from $v_{in_n} \rightarrow v_{out}$

If stage 2 resistors are perfectly matched, then $G_p = G_n$ and (24) reduces to (12). However if an error exists, say

$G_p = G + e$ and $G_n = G$, (24) becomes:

$$v_{out} = \left(v_{in_p} - v_{in_n}\right) G + v_{cm} e + \left(v_{in_p} - v_{in_n}\right) e \ldots (25)$$

In (25) the 1st term represents the ideal output, the 3rd represents a small and negligible gain error while the 2nd represents the error due to a common mode shift (i.e. the transfer function from the input common mode (v_{cm}) to v_{out}). This transfer function thus defines common mode rejection as:

$$CMR = 20 \log_{10} e \ldots (26)$$

Referring (26) back to the input by dividing by the gain of the system, thus gives the CMRR as:

$$CMRR = 20 \log_{10} \left(\frac{e}{A_v}\right) \ldots (27)$$

Working through some examples, one will see that for gains > 10, 1% resistor mismatch will produce 40dB CMR while 0.1% will produce 60dB. For a gain of 2 (such as that for stage 2), the mismatch does not get gained up as much to give us an extra 6dB CMR. This means that 1% resistor matching in stage will achieve 46dB CMR while 0.1% will achieve 66dB.

Table 1 specified |CMRR| = 80dB (not CMR). If we divide CMR = 66dB by the lowest gain setting (5 since performance is not guaranteed for a gain of 1), we achieve |CMRR| = 80dB. This is too close to the spec line, forcing us to be more aggressive w.r.t resistor matching. If 0.5% matching is targeted, |CMRR| = 86dB. This is overly conservative since resistor matching is an expensive parameter to achieve (silicon area = €€€!). As a compromise, if we target 0.065% matching we can achieve |CMRR| = 83.7dB which gives sufficient breathing room from the 80dB spec line. Inserting 0.065% matching into the model, confirms these calculations:

```
--
CMR_DC_dB = -69.7734
--
CMR_DC_lin = 0.000324586
--
Av_ina = 5
Av_ina_dB = 13.9794
--
CMRR_DC_lin = 6.49172E-05
--
CMRR_DC_db = -83.7528
```

Figure 27 plots CMR and CMRR across frequency from the model. Note however that the CMRR spec only applies to DC.

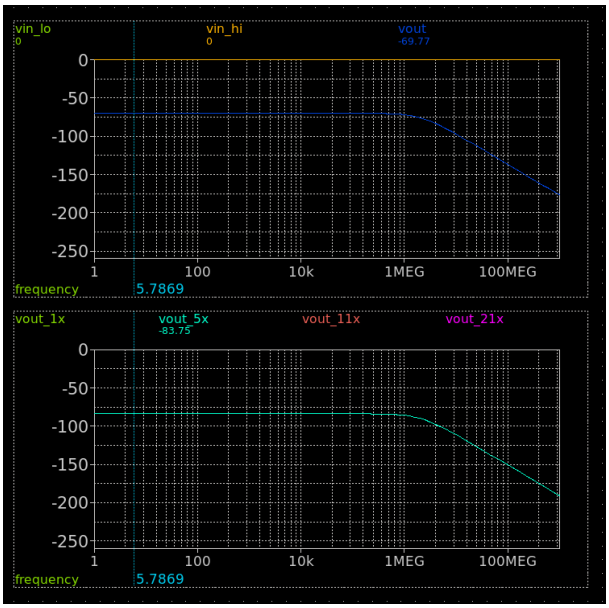

Figure 27 CMR and CMRR across frequency

Once again, these results demonstrate the importance of accurate modelling to arrive at the required design parameters to meet challenging specs, and in doing so showcase the value of the INA model.

5.4 Noise

Only thermal noise of the resistors is modelled by the INA model since it is beyond the scope of it to model flicker noise and thermal noise of the opamps. This is due to the complexity in modelling flicker and opamp thermal noise which is best left to the fab. A typical approach taken in industry, which is followed here, is to allocate half the noise budget to what we can model (resistor thermal noise), leaving it to the design to prevent flicker / opamp thermal noise contributions from violating the top level spec. Since our noise density spec = 50nV/rtHz, we thus want our INA model to confirm that our resistor choices will keep the input referred noise density ≤ 25nV/rtHz.

To do this, the model injects noise at the 6 points in the INA, which account for the dominant noise aggressors in such an INA.

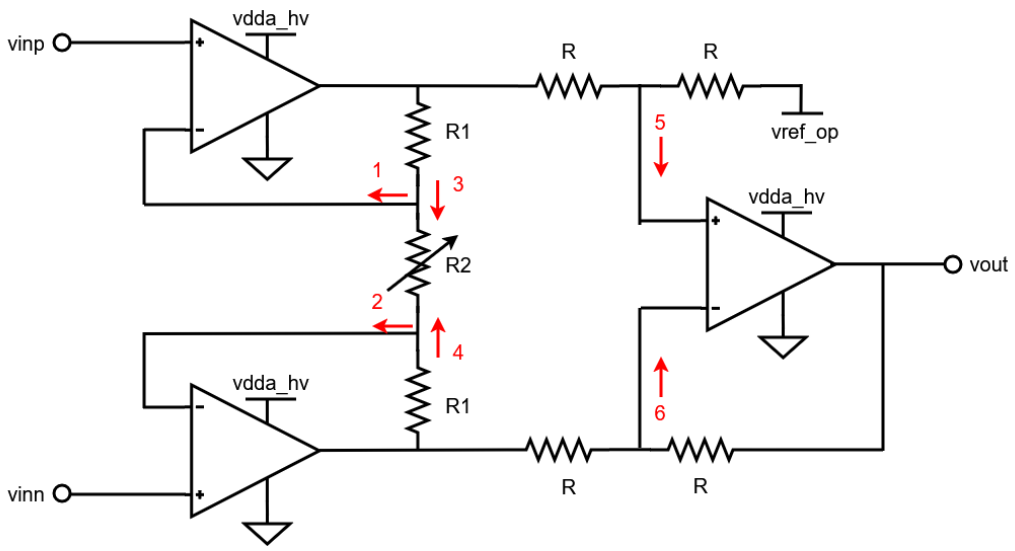

Figure 28 Dominant noise agressors in an INA

The output referred noise power density from these 6 aggressors can be expressed as:

$$v_{n_{opr}}^2 = 4kTR_{eq_1}NG_1^2 + 4kTR_{eq_2}NG_2^2 + 4kTR_{eq_1}SG_3^2 + 4kTR_{eq_2}SG_4^2 + 4kTR_{eq_5}NG_5^2 + 4kTR_{eq_6}SG_6^2 \ldots (28)$$

The rather intimidating expression in (28) can be greatly simplified by observing that $R_{eq_1} = R_{eq_2}, NG_1 = NG_2,\ SG_3 = SG_4, R_{eq_5} = R_{eq_6}, NG_5 = NG_6$. Using these observations, (28) reduces to:

$$v_{n_{opr}}^2 = 2.4kTR_{eq_1}NG_1^2 + 2.4kTR_{eq_1}SG_3^2 + 2.4kTR_{eq_5}NG_5^2 \ldots (29)$$

The input referred noise density can be found as follows:

$$v_{n_{ipr}} = \sqrt{v_{n_{opr}}^2}/A_{v_{ina}} \ldots (30)$$

Below compares the output from the model with those predicted by the above calculations.

SIMULATION RESULTS (ideal R, no sws)			
vnopr (nV/rtHz)	131	190.2	265
vnipr (nV/rtHz)	26.2	17.3	12.6
Vnrms (uVrms)	112	120.4	124.1
PREDICTED RESULTS			
vnopr (nV/rtHz)	122.5	185.3	259.2
vnipr (nV/rtHz)	24.5	16.8	12.3
Vnrms (uVrms)	155.3	167.4	173.4

Table 3 Simulation vs predicted noise results

As shown, the model noise density results agree with theoretical predictions, verifying model accuracy and understanding of the various noise transfer functions involved in the INA. In addition, it confirms we have chosed the correct resistor values to keep the input referred noise density ≤ 25nV/rtHz (marginal violation of 26.2nV/rtHz

but nothing to be concerned about).

Table 1 also specifies an integrated noise spec of 200uVrms*. To predict this, we multiply the noise density of each loop by the equivalent noise bandwidth (ENBW) of that loop and perform a root summation of the 3 answers to give the total output referred integrated noise. For this, we use the below 1st order ENBW model:

$$ENBW = \frac{\pi}{2}.BW_{cl} \ldots (30)$$

As seen in Table 3, this approach yields values larger than those predicted by the model, so which is correct – the model or the hand calculations? The model is correct, since the hand calculations do not take into account the 2nd order noise filtering of noise from stage 1 (due to the BW_{cl} of stage 2). Once again this demonstrates the importance of accurate modelling to account for higher order effects which are non-trivial to hand calculate.

With regards meeting the integrated noise performance specified in Table 1, Table 3 confirms this will not be an issue since that spec is even met without 2nd order filtering from stage 2.

Finally, this section concludes with noise density (output referred) and integrated noise plots for each of the 3 gain settings where performance is specified.

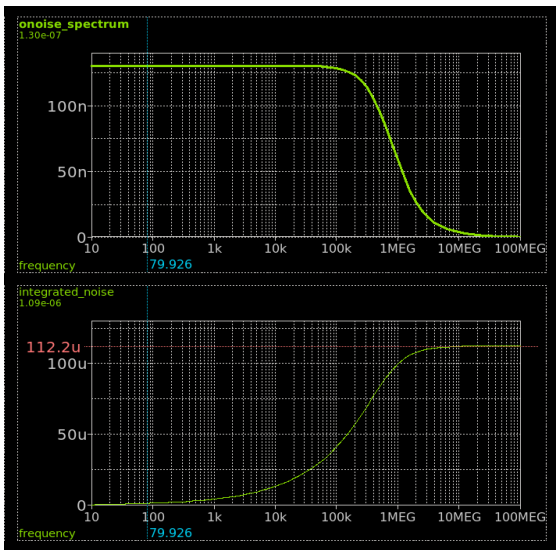

Figure 29 Output referred noise density and integrated noise for Av_ina = 5

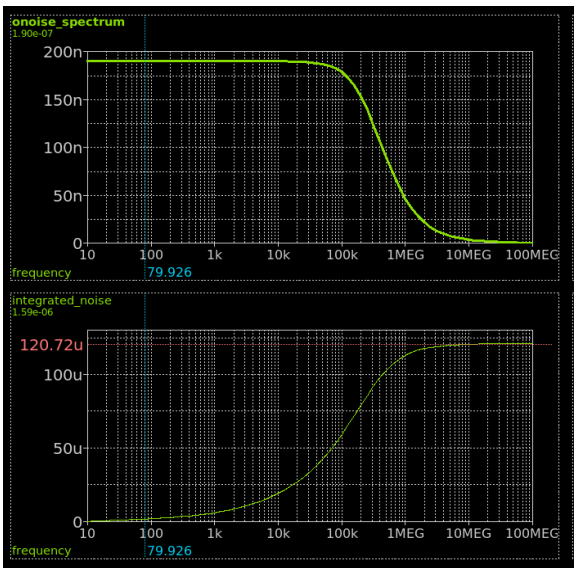

Figure 30 Output referred noise density and integrated noise for Av_ina = 11

* vnrms = 200uVrms chosen since this INA is intended to act as the front end of a temp sensor, where 200uVrms roughly corresponds to 1degC of error, but when referred back to the input at max gain, gives 1/21degC of error.

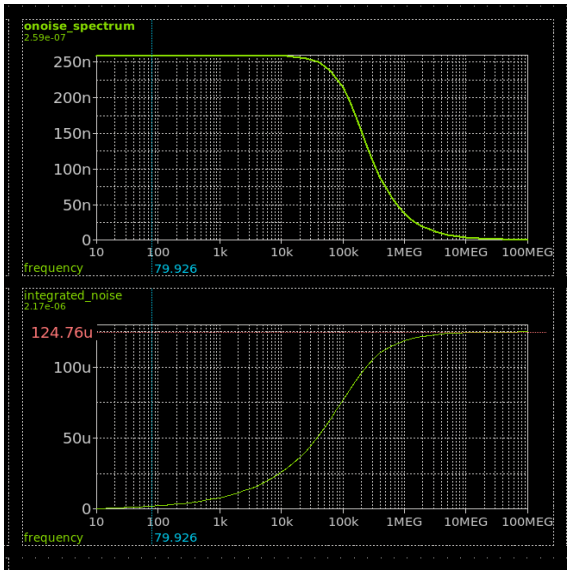

Figure 31 Output referred noise density and integrated noise for Av_ina = 21

5.5 Bandwidth (BW)

As per Table 1, BW is specified at 50kHz. This is to match the BW / settling of AD8223 but also to achieve the integrated noise spec. As shown in Figure 32 → Figure 34, the model confirms this spec is met at the 3 gain settings.

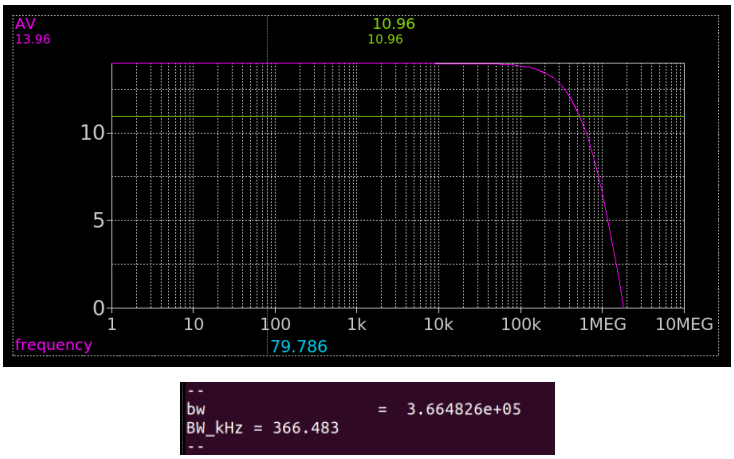

Figure 32 BW at Av_ina = 5

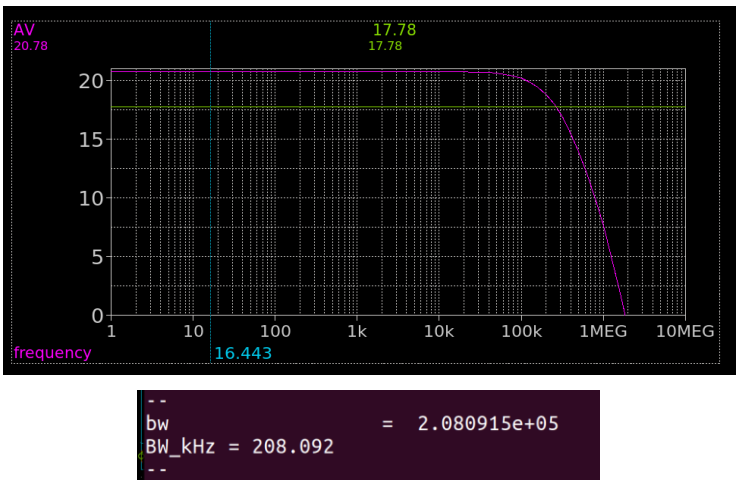

Figure 33 BW at Av_ina = 11

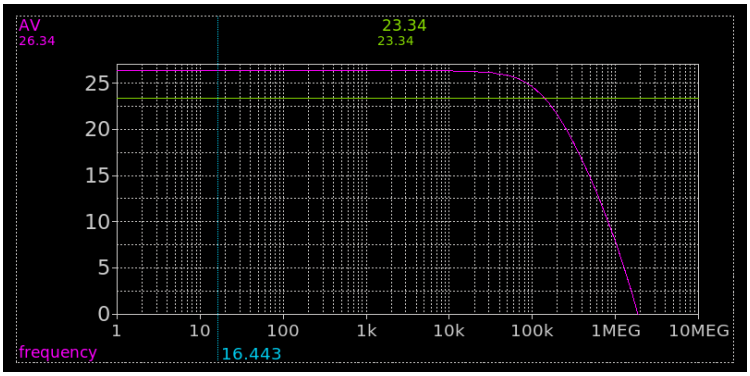


```
--
bw                    =  1.228802e+05
BW_kHz = 122.88
--
```

Figure 34 BW at Av_ina = 21

5.6 Offset (os)

INAs can cumulate significant os (> 100mV). For applications where this can't be calibrated out, that os must be digitally trimmed inside the INA. Since this INA / ASIC is intended to act as the analog front end for a temperature sensor, read by a ΣΔ-ADC, which will perform this calibration, no os digital trimming has been implemented. As a result, os is not specified in Table 1, only being included here for report purposes.

The os through an INA is given by:

$$OS = \sqrt{(os_1.NG_1)^2 + (os_2.NG_2)^2 + (os_3.NG_3)^2} \ldots (31)$$

Where:

- os_1, os_2, os_3 are the input referred offsets to each of the 3 loops

This root summation is beyond the scope of the INA model however, which computes os as:

$$OS = \sqrt{2}.os_{1,2}.A_{v_{stg1}} + os_3 NG_3 \ldots (32)$$

(32) is completely wrong and is only included as a final checker of the INA model. Inserting $os_1 = os_2 = os_3 = 10mV$, $A_{v_{stg1}} = 5$, $NG_3 = 2$ into (32) gives 90.7mV. This agrees with the models output of 140.5mV when we subtract the 50mV signal on the output ($\Delta v_{in} = 10mV$ for the below result).

```
--
vid_stg1_ave          =  1.000000e-02
vid_stg2_ave          =  1.205180e-01
vo_ave                =  1.405180e-01
vih_ave               =  1.402330e+00
vil_ave               =  1.281812e+00
```

Although this result is of zero engineering significance / interest, it does prove an effective final checker of the models validity.

6 Conclusion

Feasibility of the proposed INA has been thoroughly analysed using an accurate model implemented with open source tools. Throughout this analysis, various design parameters were identified to meet the target specifications shown in Table 1. These are summarised in Table 4.

Since all these parameters are practically achievable, we conclude that **the development of the propsed INA to meet the target specifications of Table 1 is feasible.**

Design parameter	Unit	Value	Comments
Opamp open loop gain	dB	≥ 80	Required to meet the 0.5% GE spec
Switch on resistance	Ω	≤ 100	Required to meet the 0.5% GE spec
Stage 2 resistor matching	%	≤ 0.065	Required to meet the 80dB CMRR spec

Table 4: Design parameters required to meet target specifications

7 References

[1] INA27x Voltage Output, Unidirectional Measurement Current-Shunt Monitor

[2] https://ngspice.sourceforge.io/download.html

[3] https://xschem.sourceforge.io/stefan/xschem_man/install_xschem.html

[4] https://openvaf.semimod.de/

[5] https://github.com/IHP-GmbH/ihp-sg13cmos5l

8 Revision History

Rev.	Date	Author	Changes, Remarks
A	10.04.2026	Diarmuid Collins	Created
B	15.04.2026	Diarmuid Collins	Corrected equation 11 on page 7
C	16.04.2026	Diarmuid Collins	Added tool install links. Created description on how to run testbenches on page 8.

Table 5: Revision history