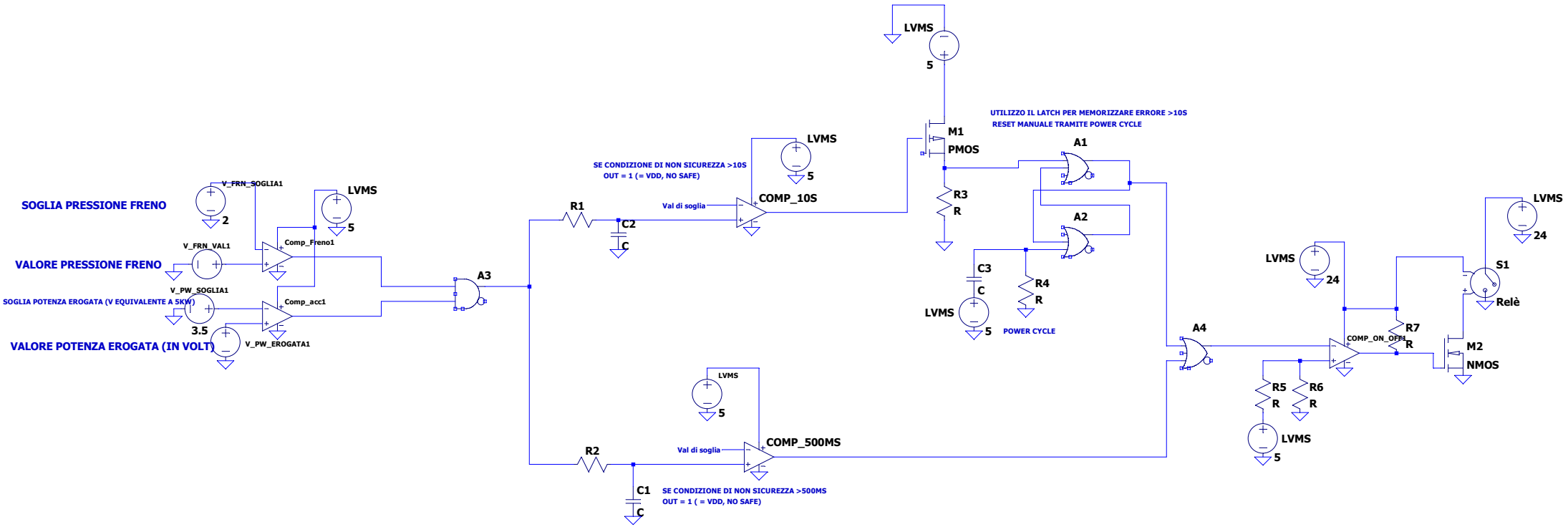

--- C:\Users\fedec\Documents\GitHub\Bspd\ERB-BSPD\Ltspice\bspdGenerico.asc ---