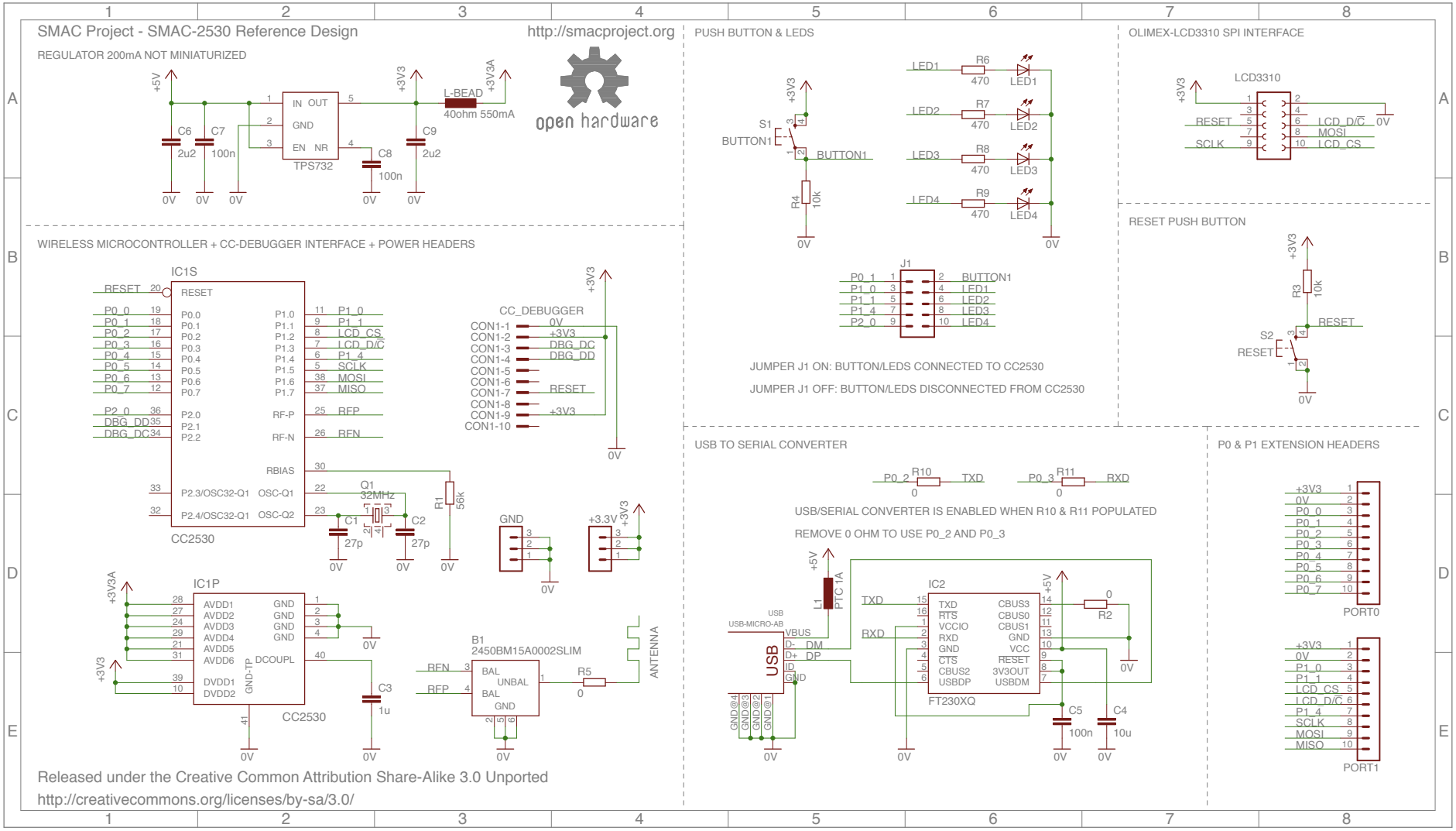
SMAC Project - SMAC-2530 Reference Design
http://smacproject.org
REGULATOR 200mA NOT MINIATURIZED
TPS732
L-BEAD
40ohm 550mA
WIRELESS MICROCONTROLLER + CC-DEBUGGER INTERFACE + POWER HEADERS
IC1S
CC2530
CC_DEBUGGER
IC1P
CC2530
B1
2450BM15A0002SLIM
ANTENNA
PUSH BUTTON & LEDS
JUMPER J1 ON: BUTTON/LEDS CONNECTED TO CC2530
JUMPER J1 OFF: BUTTON/LEDS DISCONNECTED FROM CC2530
OLIMEX-LCD3310 SPI INTERFACE
LCD3310
RESET PUSH BUTTON
USB TO SERIAL CONVERTER
USB/SERIAL CONVERTER IS ENABLED WHEN R10 & R11 POPULATED
REMOVE 0 OHM TO USE P0_2 AND P0_3
IC2
FT230XQ
P0 & P1 EXTENSION HEADERS
PORT0
PORT1
open hardware
Released under the Creative Common Attribution Share-Alike 3.0 Unported
http://creativecommons.org/licenses/by-sa/3.0/