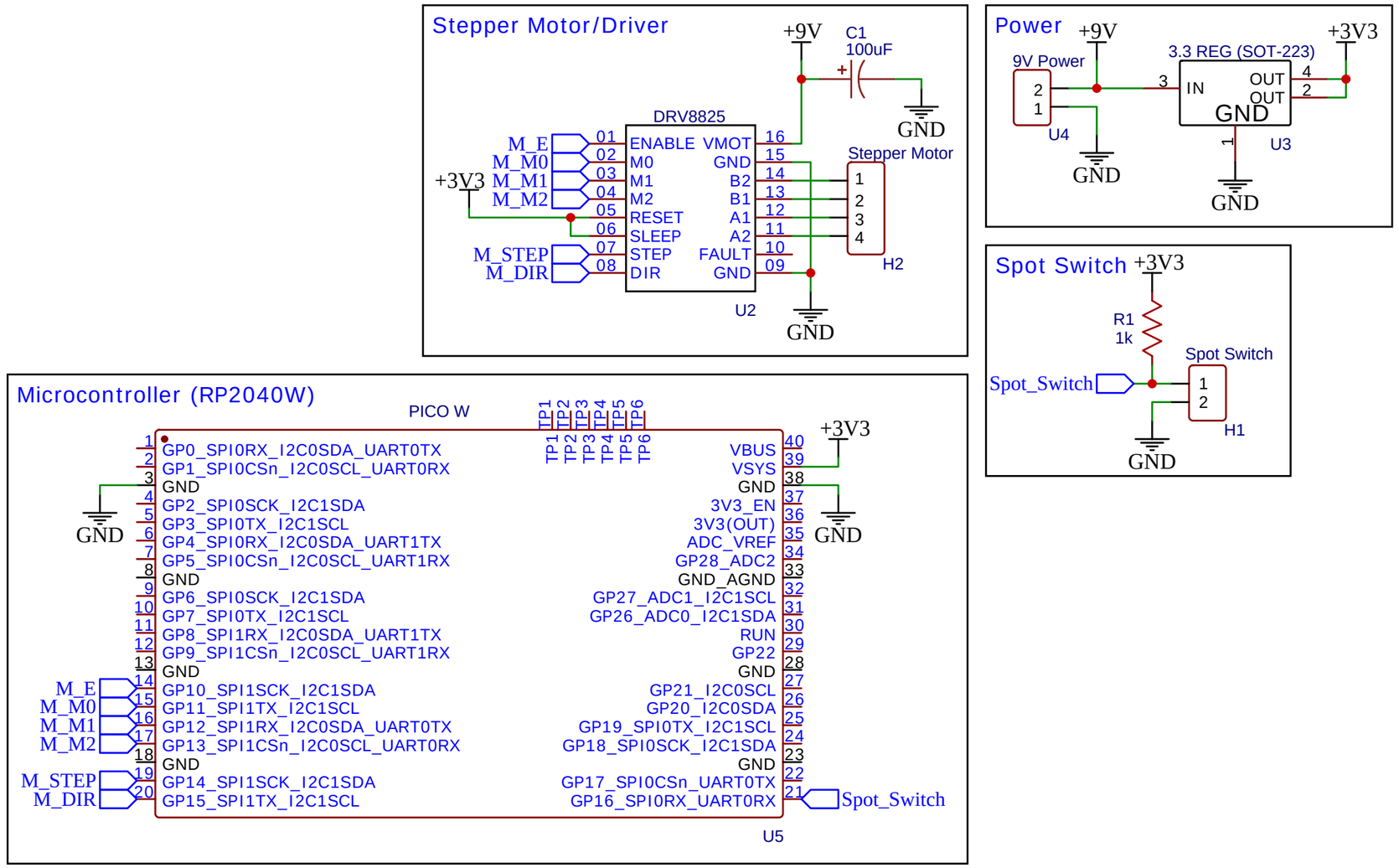

TITLE: 3DOF Cable Driven Parallel Robot		REV: 1.0
EasyEDA	Company: LOTP	Sheet: 1/1
	Date: 2024-12-11 Drawn By: Halid Y.	