TASK # 01

(1.)

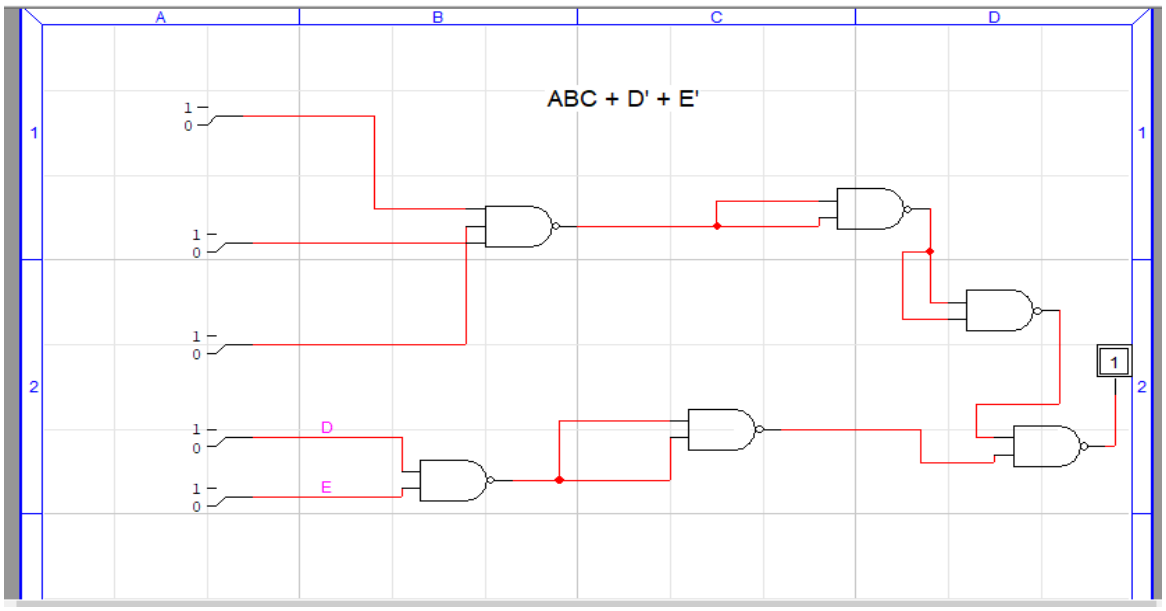

(2)

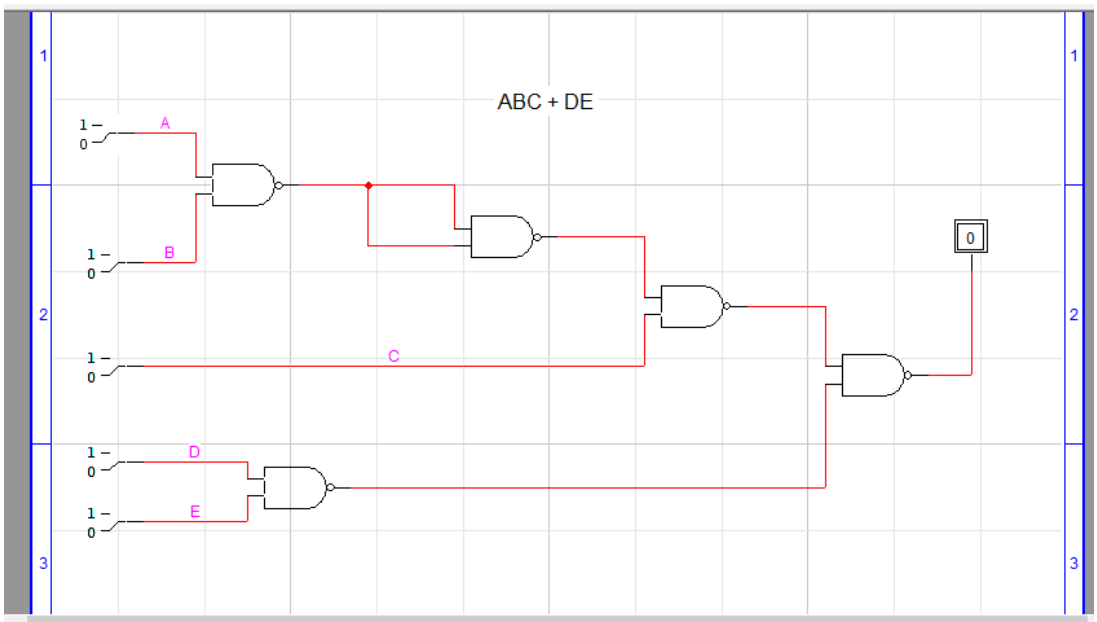

TASK # 02

(1.)

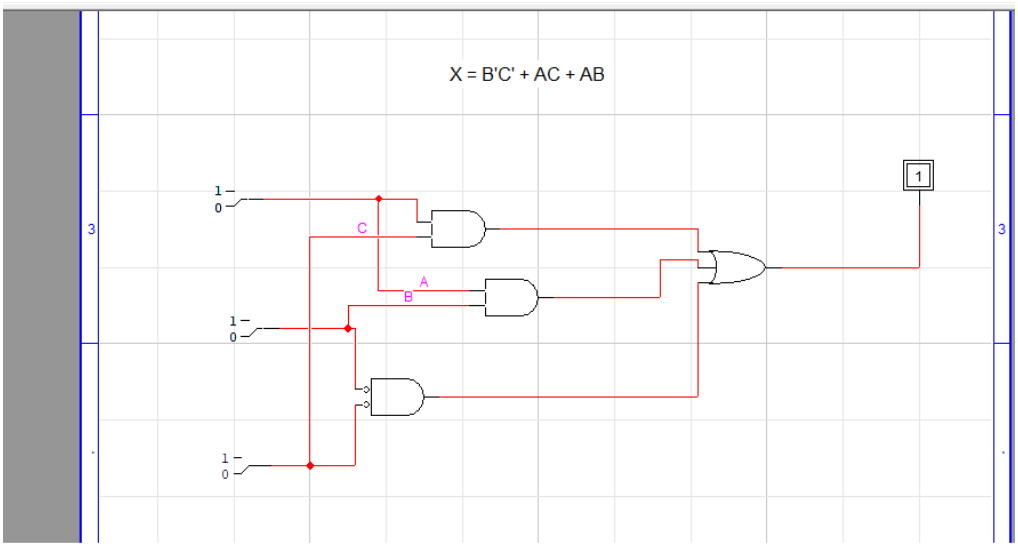
X = B'C' + AC + AB
1
0
C
A
B
1
0
1
0
1
3
3

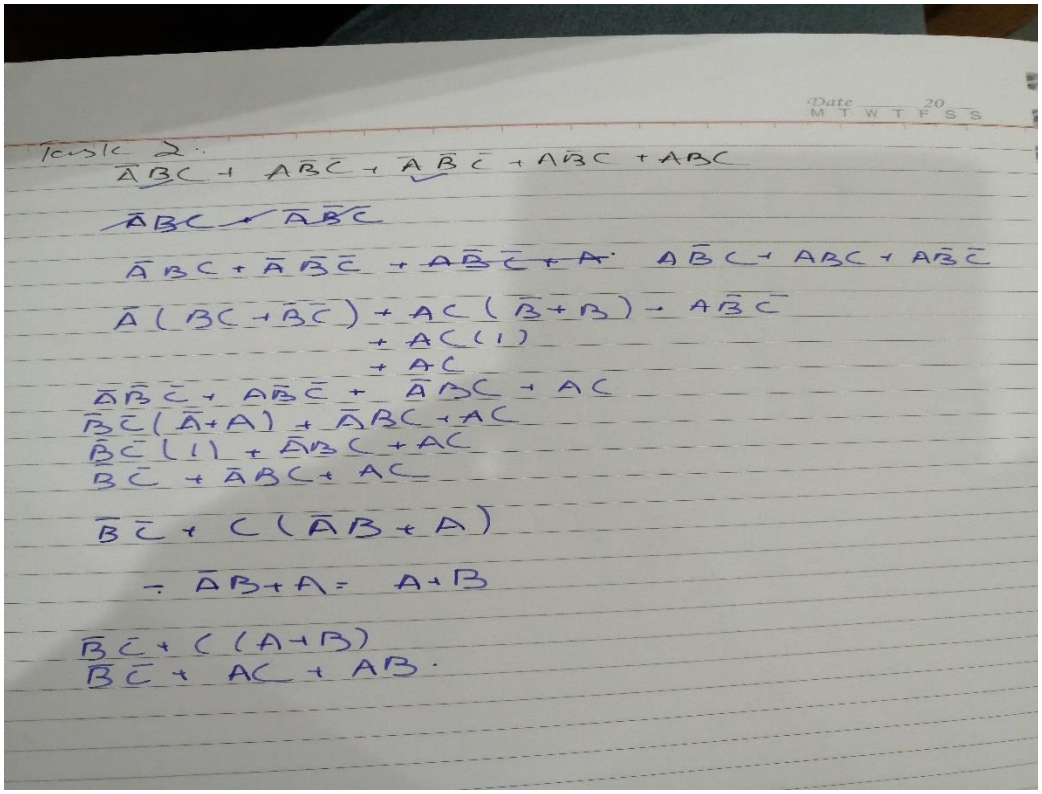
Date 20
M T W T F S S
Task 2:
$\bar{A}B\bar{C} + AB\bar{C} + \bar{A}\bar{B}\bar{C} + ABC + ABC$
$\bar{A}B\bar{C} + \bar{A}\bar{B}\bar{C}$
$\bar{A}B\bar{C} + \bar{A}\bar{B}\bar{C} + A\bar{B}\bar{C} + A \quad AB\bar{C} + ABC + AB\bar{C}$
$\bar{A}(B\bar{C} + \bar{B}\bar{C}) + AC(\bar{B} + B) + A\bar{B}\bar{C}$
$+ AC(1)$
$+ AC$
$\bar{A}B\bar{C} + AB\bar{C} + \bar{A}BC + AC$
$B\bar{C}(\bar{A} + A) + \bar{A}BC + AC$
$B\bar{C}(1) + \bar{A}BC + AC$
$B\bar{C} + \bar{A}BC + AC$
$\bar{B}\bar{C} + C(\bar{A}B + A)$
$\therefore \bar{A}B + A = A + B$
$\bar{B}\bar{C} + C(A + B)$
$\bar{B}\bar{C} + AC + AB$

(2.)

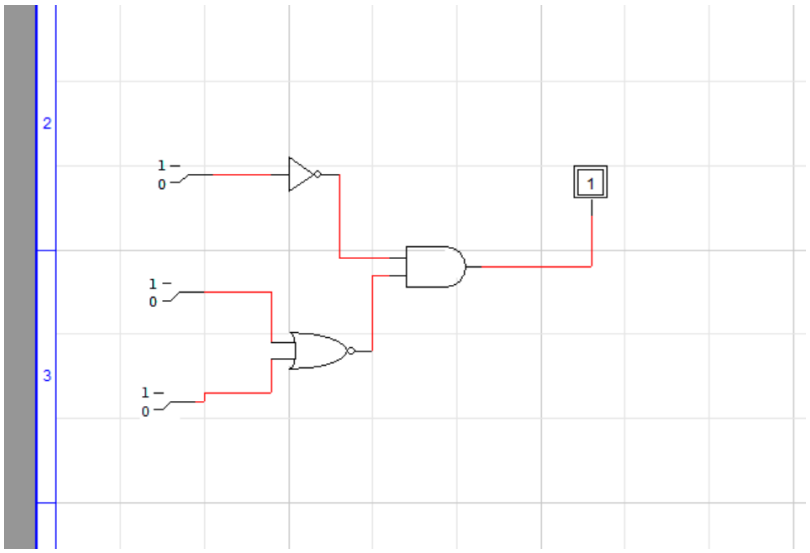
2
3
1
0
1
0
1
0
1

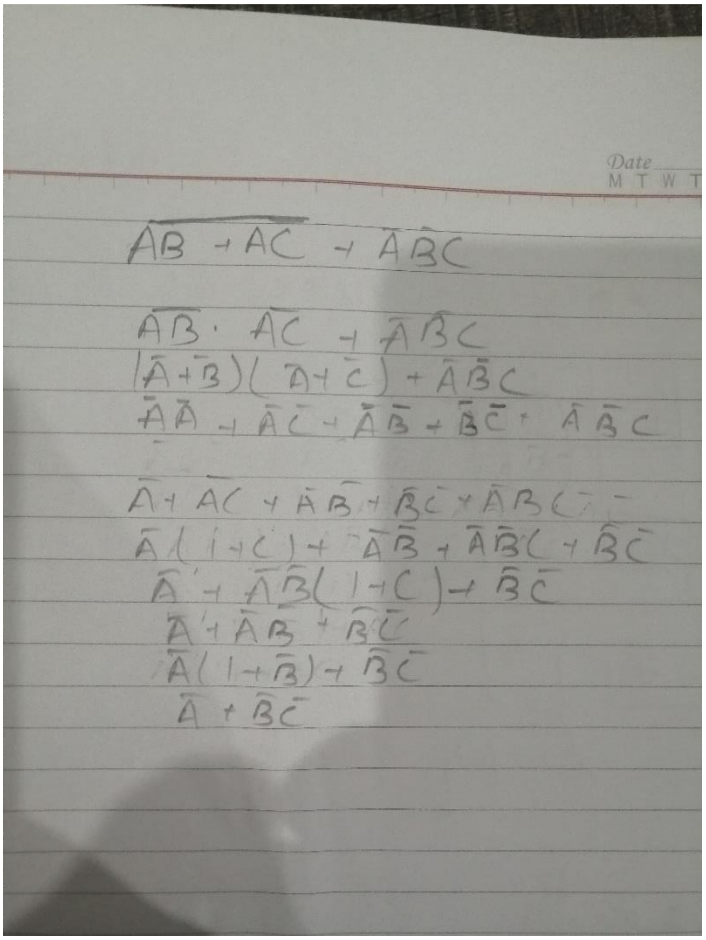
Date
M T W T
$\overline{\bar{A}B + A\bar{C} + \bar{A}\bar{B}C}$
$\overline{\bar{A}B} \cdot \overline{A\bar{C}} + \bar{A}\bar{B}C$
$(\bar{A}+B)(\bar{A}+\bar{C}) + \bar{A}\bar{B}C$
$\bar{A}\bar{A} + \bar{A}\bar{C} + \bar{A}B + B\bar{C} + \bar{A}\bar{B}C$
$\bar{A} + \bar{A}\bar{C} + \bar{A}B + B\bar{C} + \bar{A}\bar{B}C$
$\bar{A}(1+\bar{C}) + \bar{A}B + \bar{A}\bar{B}C + B\bar{C}$
$\bar{A} + \bar{A}\bar{B}(1+C) + B\bar{C}$
$\bar{A} + \bar{A}B + B\bar{C}$
$\bar{A}(1+B) + B\bar{C}$
$\bar{A} + B\bar{C}$

TASK # 03

(A.)

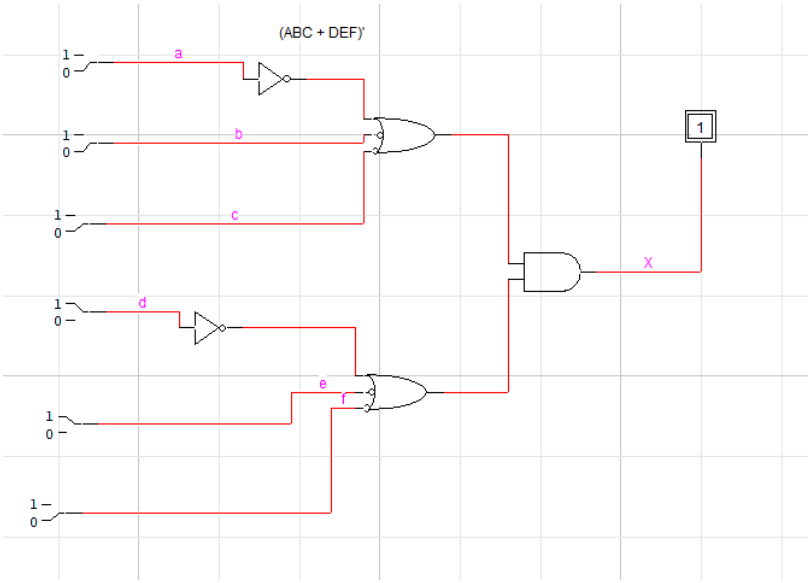

(2.)

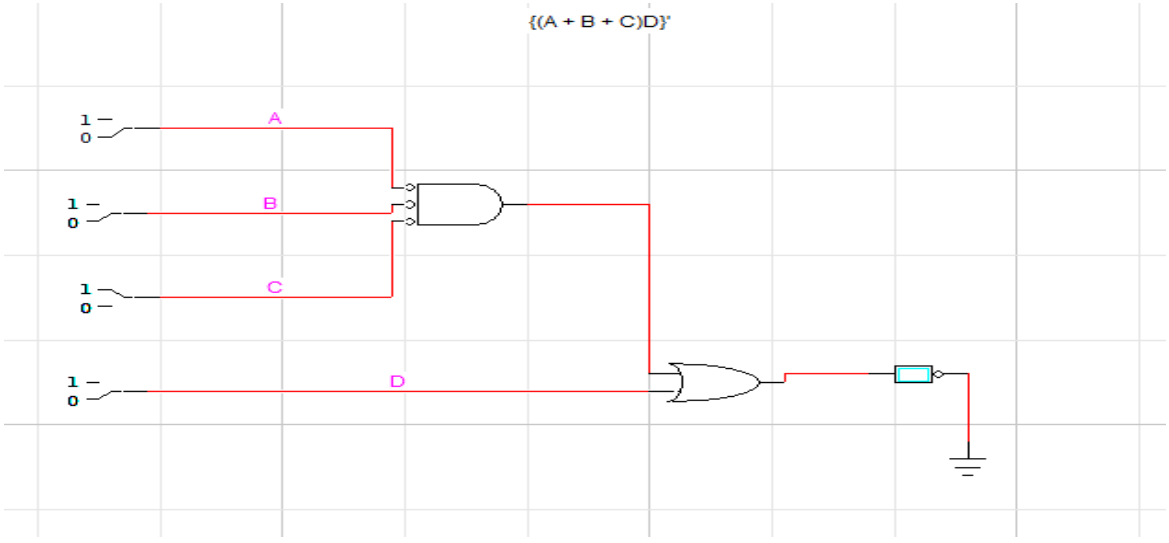

(3.)

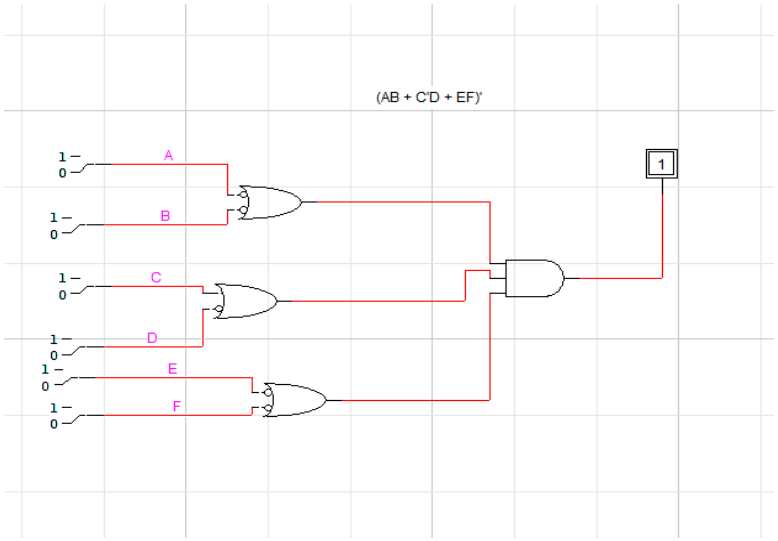

TASK # 04

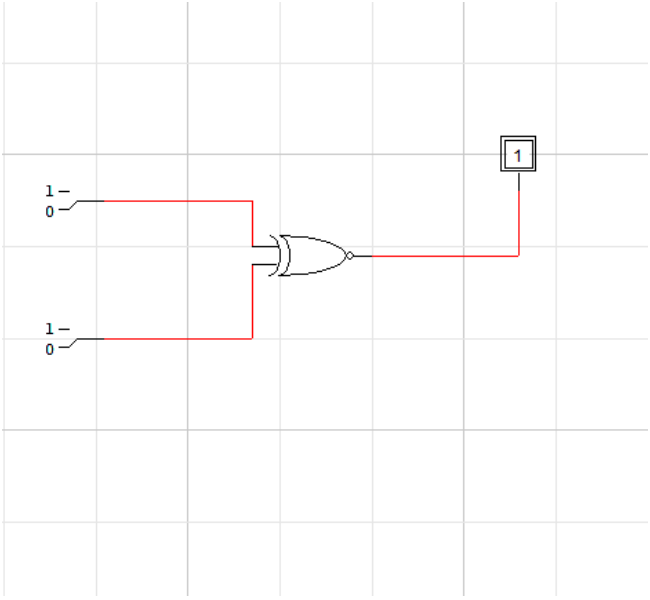

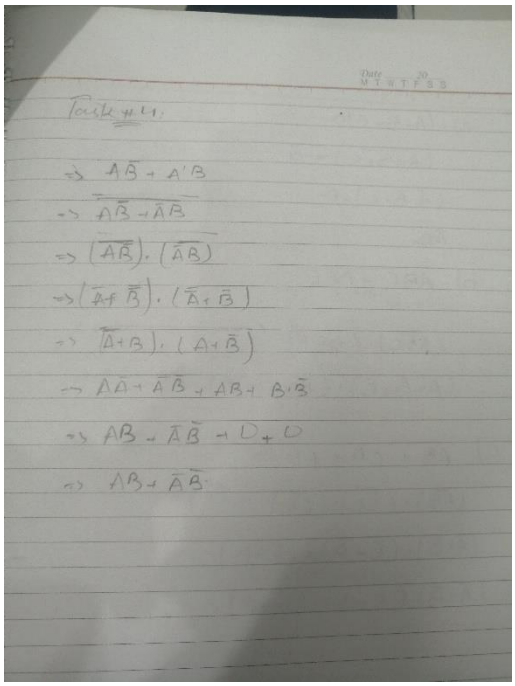

Date 20
M T W T F S S

Task # 4.

$\Rightarrow A\bar{B} + A'B$

$\Rightarrow \overline{\overline{A\bar{B}} + \bar{A}B}$

$\Rightarrow \overline{(\overline{A\bar{B}}) \cdot (\overline{\bar{A}B})}$

$\Rightarrow \overline{(\bar{A} + \bar{\bar{B}}) \cdot (\bar{\bar{A}} + \bar{B})}$

$\Rightarrow \overline{(\bar{A} + B) \cdot (A + \bar{B})}$

$\Rightarrow A\bar{A} + \bar{A}\bar{B} + AB + B \cdot \bar{B}$

$\Rightarrow AB + \bar{A}\bar{B} + 0 + 0$

$\Rightarrow AB + \bar{A}\bar{B}$

TASK # 05

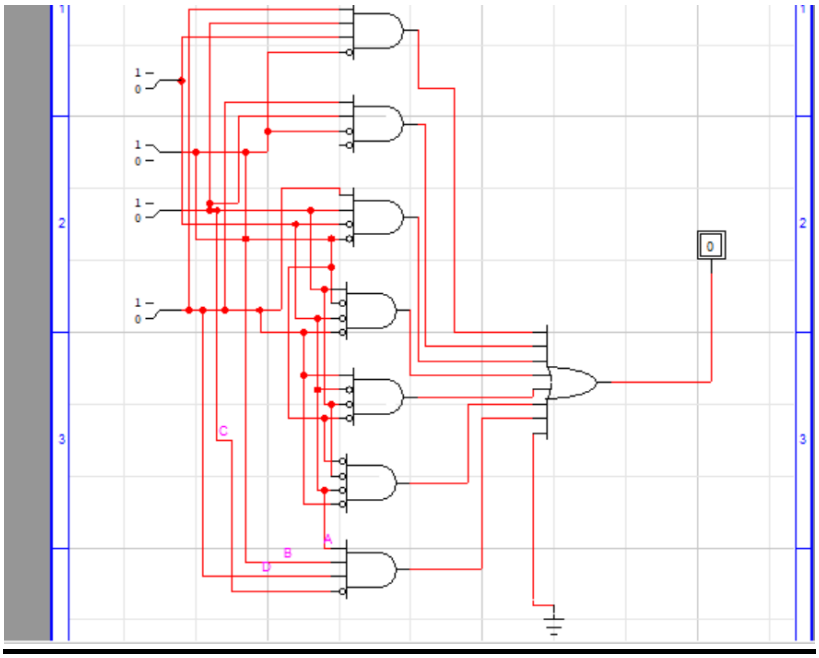
1
0
1
0
1
0
1
0
0
C
B
A

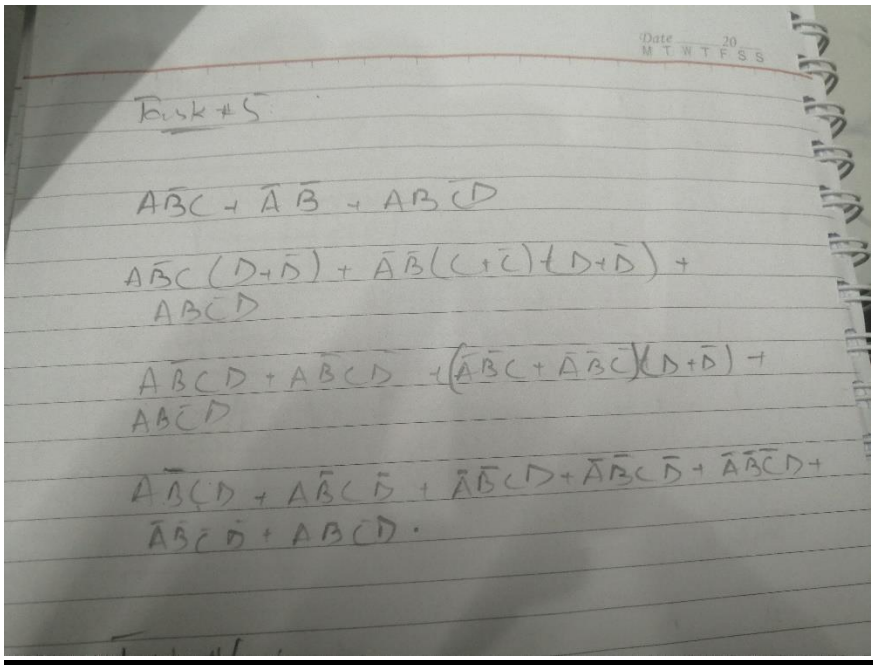
Date
M T W T F S S
Task #5
$A\bar{B}C + \bar{A}\bar{B} + AB\bar{C}D$
$A\bar{B}C(D+\bar{D}) + \bar{A}\bar{B}(C+\bar{C})(D+\bar{D}) + AB\bar{C}D$
$A\bar{B}CD + A\bar{B}C\bar{D} + (\bar{A}\bar{B}C + \bar{A}\bar{B}C)(D+\bar{D}) + AB\bar{C}D$
$A\bar{B}CD + A\bar{B}C\bar{D} + \bar{A}\bar{B}CD + \bar{A}\bar{B}C\bar{D} + \bar{A}\bar{B}\bar{C}D + \bar{A}\bar{B}C\bar{D} + AB\bar{C}D$

TASK # 06

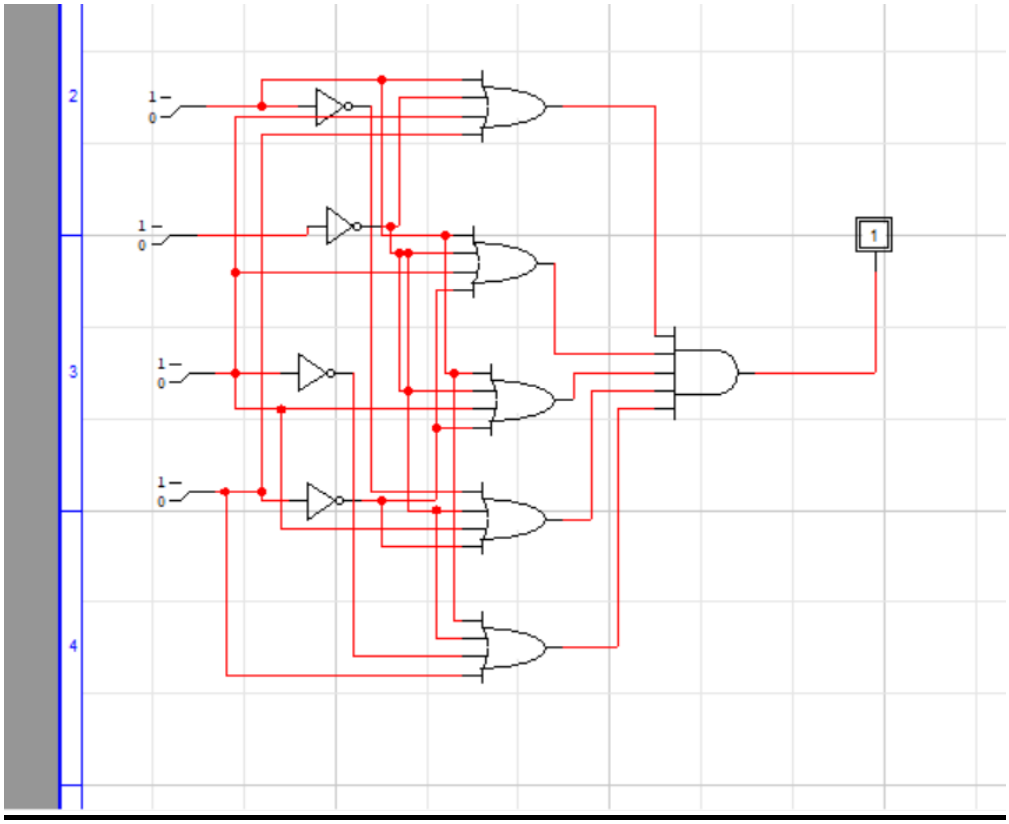

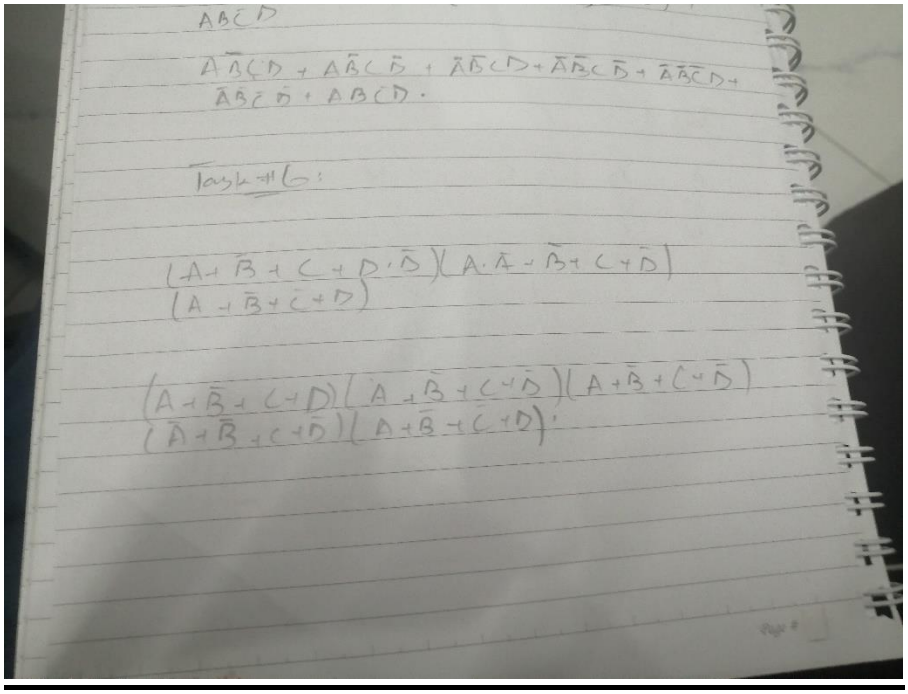

TASK 7:

A	B	C	X
0	0	0	0
0	0	1	1
0	1	0	0
0	1	1	0
1	0	0	1
1	0	1	0
1	1	0	0
1	1	1	1

TASK 8:

A	B	C	X
0	0	0	0
0	0	1	1
0	1	0	0
0	1	1	0
1	0	0	1
1	0	1	0
1	1	0	0
1	1	1	1

TASK # 09

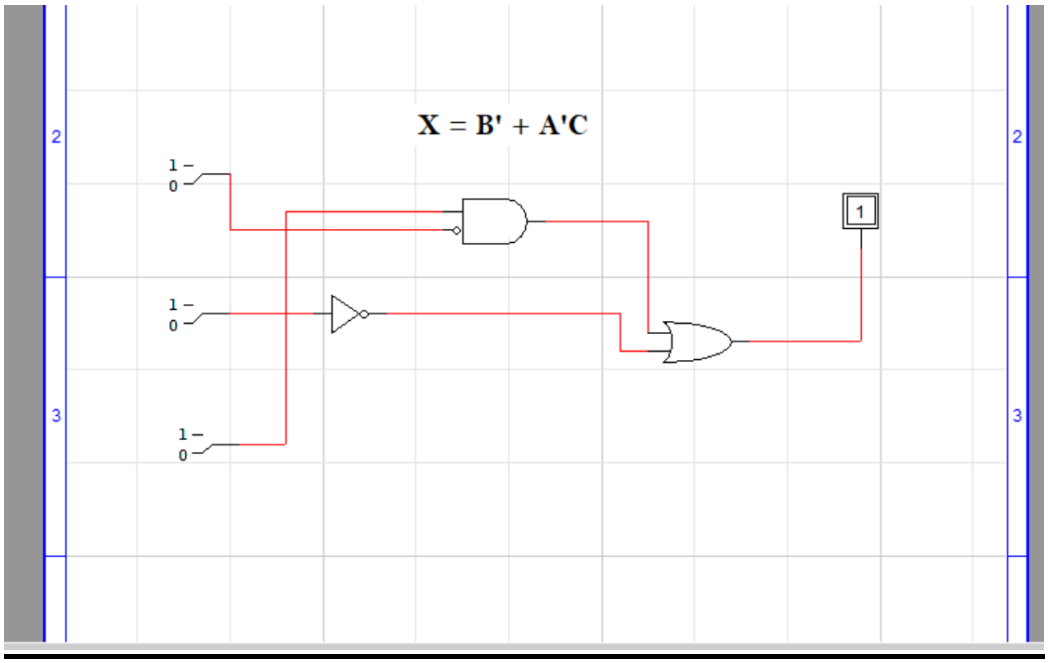
X = B' + A'C
1
0
1
0
1
0
1

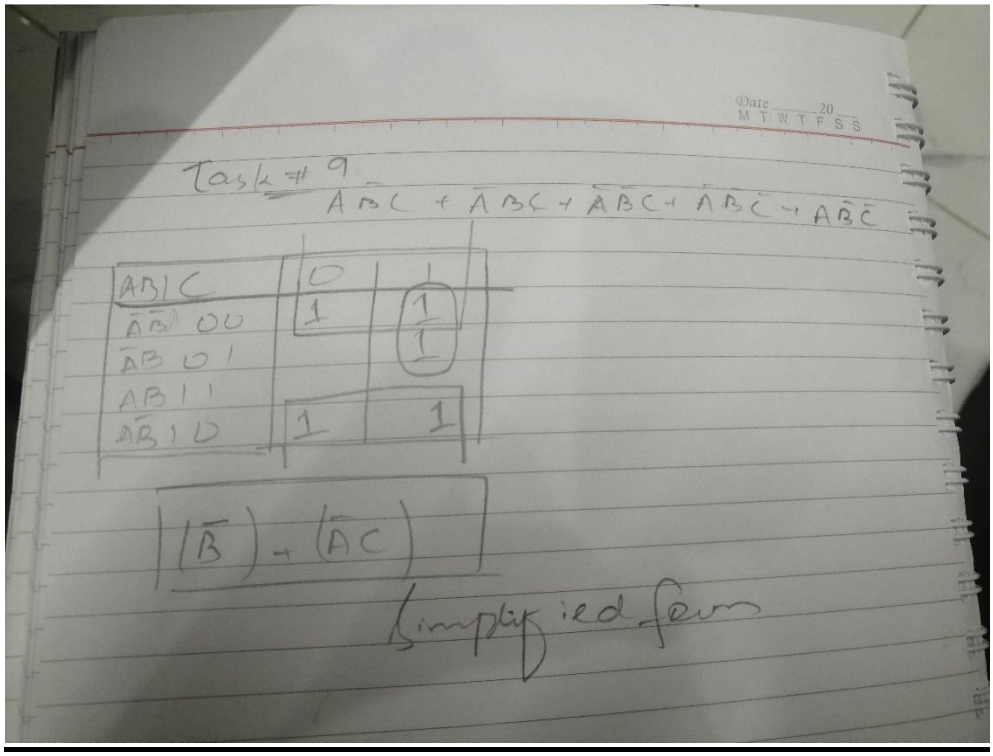
Task # 9
A B C + Ā B C + Ā B C̄ + Ā B̄ C + A B̄ C̄
A B C
Ā B̄ 0 0
Ā B 0 1
A B 1 1
A B̄ 1 0
(B̄) + (Ā C)
Simplified form

TASK # 10

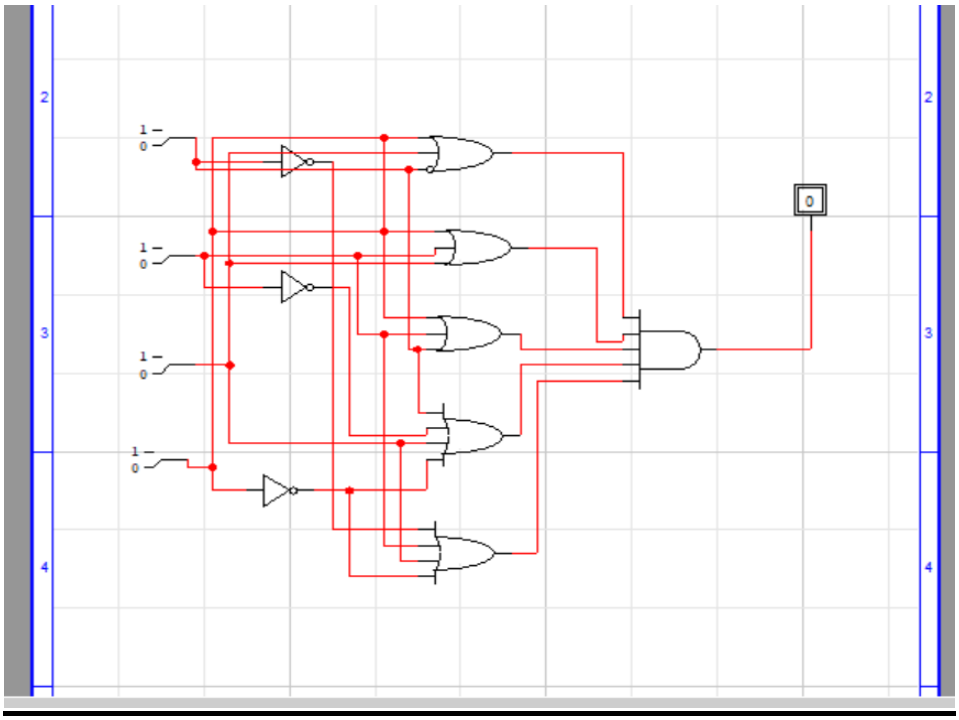
1
0
1
0
1
0
1
0
0

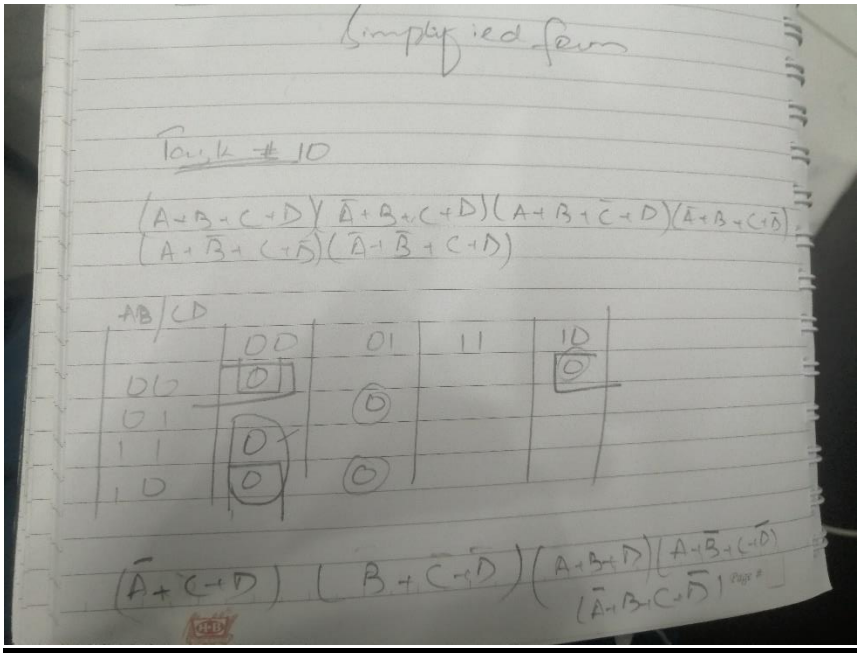
Simplified form
Task # 10
(A+B+C+D)(Ā+B+C+D)(A+B+C̄+D)(Ā+B+C+D̄)
(A+B̄+C+D̄)(Ā+B̄+C+D)
AB/CD
00
01
11
10
00
01
11
10
(Ā+C+D)(B+C̄+D̄)(A+B+D)(A+B̄+C+D̄)
(Ā+B+C+D̄)