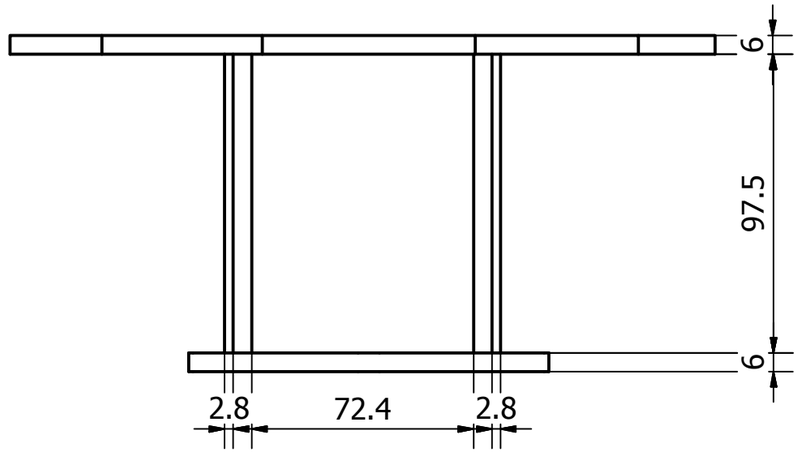

TOP VIEW

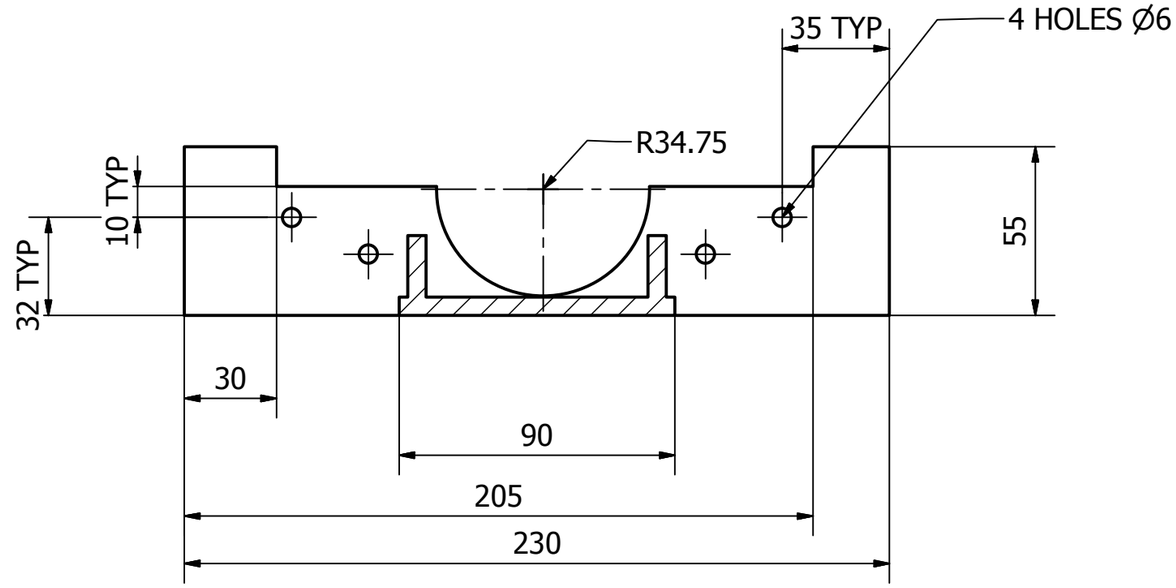

SECTION VIEW A-A (1 : 2)

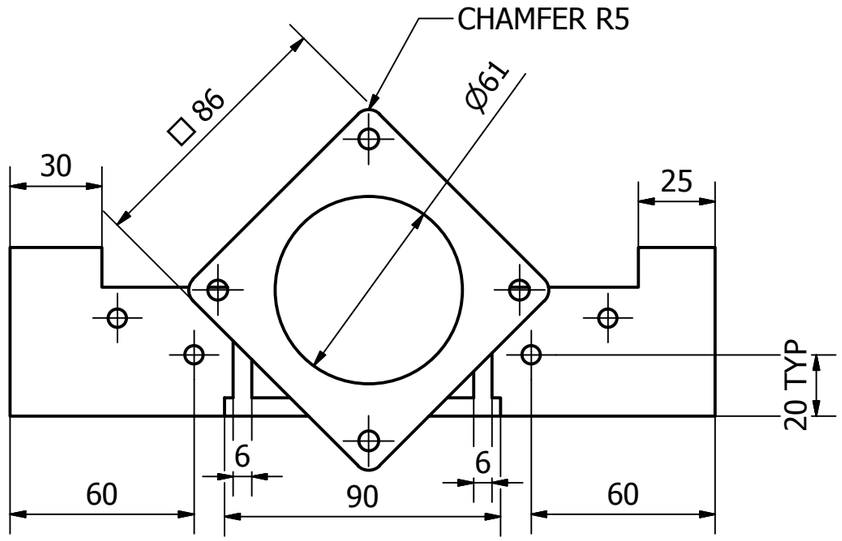

FRONT VIEW

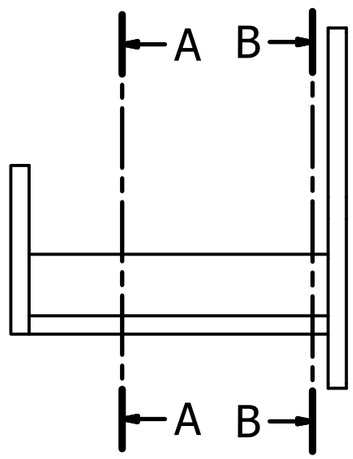

SIDE VIEW

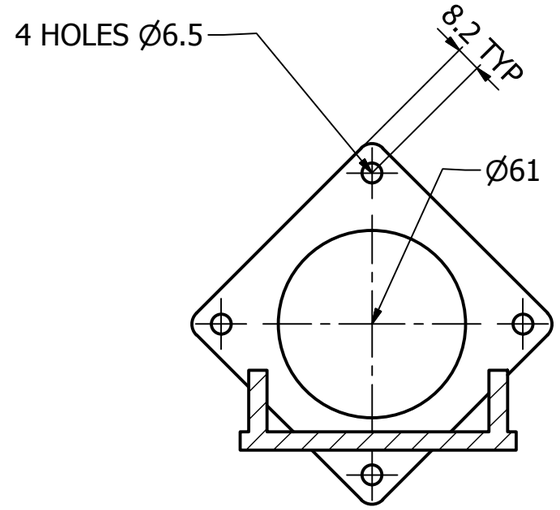

SECTION VIEW B-B (1 : 2)

Designed by	Checked by	Approved by	Date		Date	
M215104					22/08/2017	

BAseSupport	Edition	Sheet 1 / 1