Bonfiglioli
Riduttori

VF-W series

Wormgears

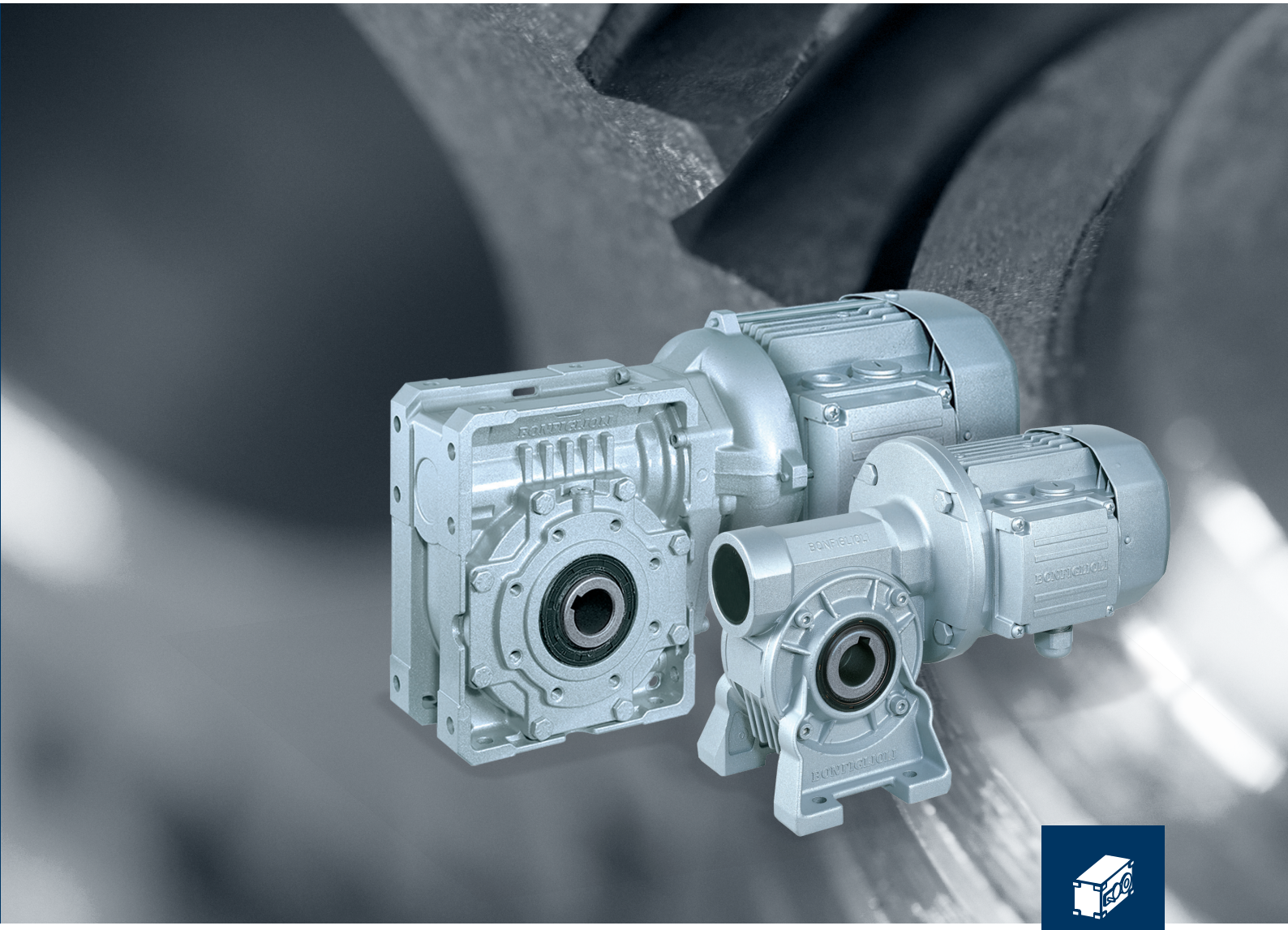

PRODUCT

Bonfiglioli
Forever Forward

Chapter	Description	Page
GENERAL INFORMATION		**2**
1	Symbols and units of measure	2
2	Definitions	3
3	Alllowed temperature limits	6
4	Selection	7
5	Verification	9
6	Installation	9
7	Lubrication	11
8	Storage	13
9	Conditions of supply	13
WORMGEARS		**15**
10	Design features	15
11	Versions	16
12	Arrangements	17
13	Designation	20
14	Gearbox options	22
15	Mounting position and terminal box orientation	26
16	Overhung loads	35
17	Thrust loads	36
18	Efficiency	39
19	Non-reversing	39
20	Angular backlash	41
21	Gearmotor rating charts	42
22	Speed reducer rating charts	73
23	Ratio distribution for VF/VF, VF/W, W/VF series gearboxes	95
24	Motor availability	96
25	Moment of inertia	99
26	Dimensions for gearmotors an gear units with IEC motor interface.	111
27	DImensions for gear units with solid input shaft	171
28	Accessories	175
29	Customer' shaft	177
30	Torque limiter	178

Chapter	Description	Page
VF-EP / W-EP - GEARBOXES AND GEARMOTORS FOR CORROSIVE AND ASEPTIC ENVIRONMENTS		**182**
31	Main benefits of the EP (enhanced protection) series for the food and beverage industries	182
32	Designation	184
33	Gearbox options	186
34	Motor options	186
35	Others information about gearbox and gearmotor	187
36	The accessories for the _EP series	187
RVS LIMIT-STOP DEVICE		**189**
37	General information	189
38	Ordering codes	190
39	Designation	191
40	Gearmotor selection	192
41	Dimensions	195
42	Options	199
ELECTRIC MOTORS		**200**
M1	Symbols and units of measurement	200
M2	General characteristics	201
M3	Mechanical features	204
M4	Electrical characteristics	208
M5	Asynchronous brake motors	215
M6	DC brake motors type BN and M_FD	216
M7	AC brake motors type BN and M_FA	220
M8	Brake release systems	223
M9	Options	225
M10	Motor rating charts	238
M11	Motors dimensions	255

Revisions

Refer to page 264 for the catalogue revision index. Visit www.bonfiglioli.com to search for catalogues with up-to-date revisions.

GENERAL INFORMATION

1 SYMBOLS AND UNITS OF MEASUREMENT

Symbols	Units of Measure	Description
$A_{N\,1,2}$	[N]	Permissible axial force
f_s	–	Service factor
f_T	–	Thermal factor
f_{TP}	–	Temperature factor
i	–	Gear ratio
I	–	Cyclic duration factor
J_C	[Kgm^2]	Mass moment of inertia to be driven
J_M	[Kgm^2]	Motor mass moment of inertia
J_R	[Kgm^2]	Mass moment of inertia for the gear unit
K	–	Mass acceleration factor
K_r	–	Transmission element factor
$M_{1,2}$	[Nm]	Torque
$M_{c\,1,2}$	[Nm]	Calculated torque
$M_{n\,1,2}$	[Nm]	Rated torque
$M_{r\,1,2}$	[Nm]	Torque demand

Symbols	Units of Measure	Description
$n_{1,2}$	[min^{-1}]	Speed
$P_{1,2}$	[kW]	Power
$P_{N\,1,2}$	[kW]	Rated power
$P_{R\,1,2}$	[kW]	Power demand
$R_{C\,1,2}$	[N]	Calculated radial force
$R_{N\,1,2}$	[N]	Permissible overhung load
S	–	Safety factor
t_a	[°C]	Ambient temperature
t_s	[°C]	Surface temperature
t_o	[°C]	Oil temperature
t_f	[min]	Work time under constant load
t_r	[min]	Rest time
η_d	–	Dynamic efficiency
η_s	–	Static efficiency

$_1$ value applies to input shaft

$_2$ value applies to output shaft

Bonfiglioli Riduttori

	This symbol indicates important technical information.
	This symbol indicates situations of danger which, if ignored, may result in risks to personal health and safety.
	The symbol shows the page the information can be sorted from.
0° 90° 270° 180°	This symbol refers to the angle the overhung load applies (viewing from drive end).
kg	Symbol refers to weight of gearmotors and speed reducers. Figure for gearmotors incorporates the weight of the 4-pole motor and for life lubricated units, where applicable, the weight of the oil.

2 DEFINITIONS

2.1 TORQUE

Rated torque M_{n2} [Nm]
The torque that can be transmitted continuously through the output shaft, with the gear unit operated under a service factor f_s = 1.
Rating is speed sensitive.

Required torque M_{r2} [Nm]
The torque demand based on application requirement. It is recommended to be equal to or less than torque $\mathbf{M_{n2}}$ the gearbox under study is rated for.
Calculated torque M_{c2} [Nm]
Computational torque value to be used when selecting the gearbox.
It is calculated considering the required torque $\mathbf{M_{r2}}$ and service factor $\mathbf{f_s}$, as per the relationship here after:

$$M_{c2} = M_{r2} \times f_s \leq M_{n2} \quad (1)$$

2.2 POWER

Rated input power P_{n1} [kW]
The parameter can be found in the gearbox rating charts and represents the kW that can be safely transmitted to the gearbox, based on input speed $\mathbf{n_1}$ and service factor f_s= 1.

2.3 EFFICIENCY

Dynamic efficiency [η_d]

The dynamic efficiency is the relationship of power delivered at output shaft $\mathbf{P_2}$ to power applied at input shaft $\mathbf{P_1}$:

$$\eta_d = \frac{P_2}{P_1} \qquad (2)$$

It may be worth highlighting that values of rated torque $\mathbf{M_{n2}}$ given in the catalogue take the dynamic efficiency into consideration. Values of ηd are calculated for gearboxes after a sufficiently long running-in period.

After the running-in period the surface temperature in operation reduces and finally stabilises.

The operating temperature is affected by both the duty and the ambient temperature, refer to chapter "ALLOWED TEMPERATURE LIMITS" for information about the permitted values. If however, surface temperatures are to be expected near the upper limit, it is recommended that oil seals in Fluoro elastomer compound are specified at the time of order through option **PV**.

Static efficiency [η_S]

Efficiency applicable at start-up of the gearbox. Although this is generally not a significant factor for helical gears, it may be instead critical when selecting worm gearmotors operating under intermittent duty (e.g. Hoisting).

2.4 GEAR RATIO [i]

The value for the gear ratio is referred to with the letter [**i**] and calculated through the relationship of the input speed $\mathbf{n_1}$ to the output speed $\mathbf{n_2}$:

$$i = \frac{n_1}{n_2} \qquad (3)$$

2.5 MOMENT OF INERTIA J_r [kgm^2]

Moments of inertia specified in the catalogue refer to the input shaft of the gear unit and, as such, they can be simply added to the inertia of the motor, when this is combined.

2.6 SERVICE FACTOR [f_s]

This factor is the numeric value describing reducer service duty. It takes into consideration, with unavoidable approximation, daily operating conditions, load variations and overloads connected with reducer application. In the graph below, after selecting proper “daily working hours” column, the service factor is given by intersecting the number of starts per hour and one of the K1, K2 or K3 curves. K_ curves are linked with the service nature (approximately: uniform, medium and heavy) through the acceleration factor of masses K, connected to the ratio between driven masses and motor inertia values. Regardless to the value given for the service factor, we would like to remind that in some applications, which for example involve lifting of parts, failure of the reducer may expose the operators to the risk of injuries.
If in doubt, please contact Bonfiglioli’s Technical Service.

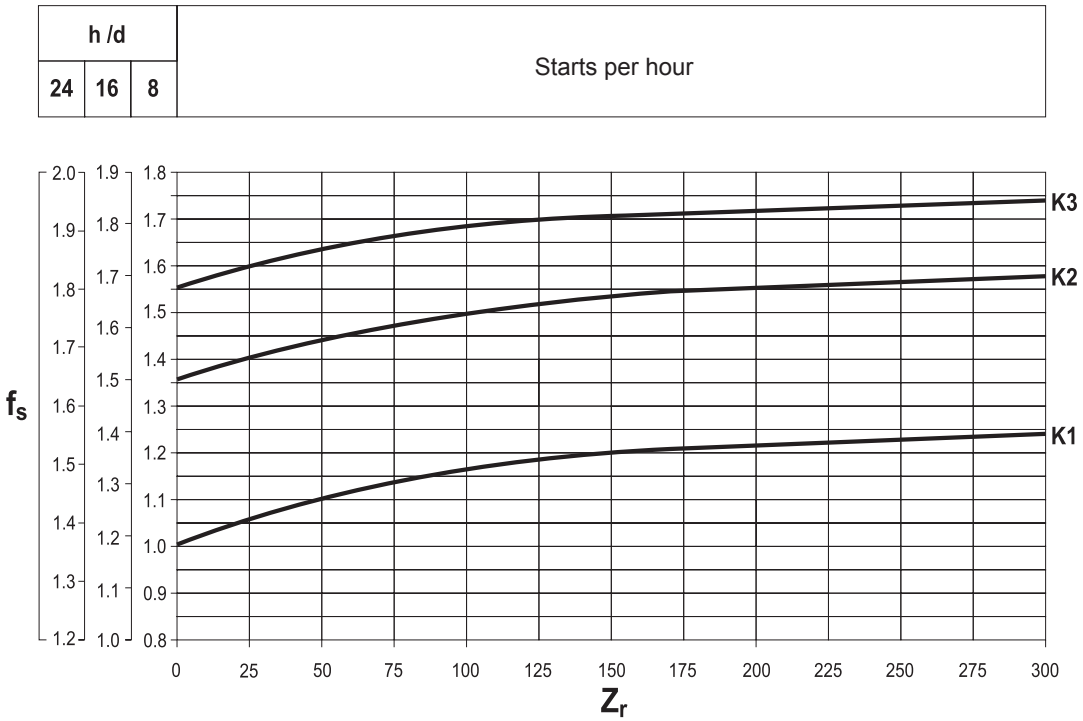

Acceleration factor of masses, [K]

This parameter serves for selecting the right curve for the type of load. The value is given by the following ratio:

$$K = \frac{J_c}{J_m} \qquad (4)$$

$K = \frac{J_c}{J_m}$	→	J_c = Moment of inertia of driven masses referred to motor drive shaft
		J_m = Motor moment of inertia

K ≤ 0,25	→	**K1**	Uniform load
0.25 < K ≤ 3	→	**K2**	Moderate shock load
3 < K ≤ 10	→	**K3**	Heavy shock load
K > 10	→		please contact Bonfiglioli’s Technical Service

3 ALLOWED TEMPERATURE LIMITS

Symbols	Description / Condition	Value (*)	
		Synthetic Oil	Mineral Oil
t_a	Ambient temperature		
$t_{au\ min}$	Minimum operating ambient temperature	**-30°C**	**-10°C**
$t_{au\ Max}$	Maximum operating ambient temperature	**+50°C**	**+40°C**
$t_{as\ min}$	Minimum storage ambient temperature	**-40°C**	**-10°C**
$t_{as\ Max}$	Maximum storage ambient temperature	**+50°C**	**+50°C**
t_s	Surface temperature		
$t_{s\ min}$	Minimum gearbox surface temperature starting with partial load (#)	**-25°C**	**-10°C**
$t_{sc\ min}$	Minimum gearbox surface temperature starting with full load	**-10°C**	**-5°C**
$t_{s\ Max}$	Maximum casing surface temperature during continuous operation (measured next to the gearbox input)	**+100°C**	**+100°C** (@)
t_o	Oil temperature		
$t_{o\ Max}$	Maximum oil temperature during continuous operation	**+95°C**	**+95°C** (@)

(*) = Refer to the table “Selection of the optimal oil viscosity” for further information about minimum and maximum values of different oil viscosity. For values of t_a < -20°C and t_s, t_o > 80 °C, choose (as permitted in the product configuration stage) the sealing type of the most suitable material to the type of application. If needed contact Bonfiglioli Technical Service.

(@) = Continuous operation it is not advised if t_s and t_o range is 80°C to 95 °C.

(#) = For full load start-up it is recommended to ramp-up and provide for greater absorption of the motor. If needed, contact Bonfiglioli Technical Service.

4 SELECTION

4.1 Selecting a gearmotor

a) Determine service factor $\mathbf{f_s}$ as formerly specified.

b) Determine power required at gearbox input shaft:

$$P_{r1} = \frac{M_{r2} \times n_2}{9550 \times \eta_d} \quad [kW] \qquad (5)$$

c) Consult the gearmotor rating charts and locate the table corresponding to normalised power $\mathbf{P_n}$:

$$P_n \geq P_{r1} \qquad (6)$$

Unless otherwise specified, power $\mathbf{P_n}$ of motors indicated in the catalogue refers to continuous duty S1.
For motors used in conditions other than S1, the type of duty required by reference to CEI 2-3/IEC 34-1 Standards must be mentioned. For duties from S2 to S8 in particular and for motor frame 132 or smaller, extra power output can be obtained with respect to continuous duty.
Accordingly the following condition must be satisfied:

$$P_n \geq \frac{P_{r1}}{f_m} \qquad (7)$$

The adjusting factor $\mathbf{f_m}$ can be obtained from table here after.

Intermittence ratio

$$I = \frac{t_f}{t_f + t_r} \times 100 \qquad (8)$$

t_f = work time at constant load

t_r = rest time

	DUTY						
	S2			**S3***			**S4 - S8**
	Cycle duration [min]			Cyclic duration factor (I)			Please contact us
	10	**30**	**60**	**25%**	**40%**	**60%**	
f_m	1.35	1.15	1.05	1.25	1.15	1.1	

* Cycle duration, in any event, must be 10 minutes or less. If it is longer, please contact our Technical Service.

Next, refer to the appropriate $\mathbf{P_n}$ section within the gearmotor selection charts and locate the unit that features the desired output speed $\mathbf{n_2}$, or closest to, along with a safety factor **S** that meets or exceeds the applicable service factor $\mathbf{f_s}$.

$$S \geq f_s \qquad (9)$$

The safety factor is so defined:

$$S = \frac{M_{n2}}{M_2} = \frac{P_{n1}}{P_1} \qquad (10)$$

As standard, gear and motor Combinations are implemented with 2, 4 and 6 pole motors, 50 Hz supplied.
Should the drive speed be different from 2800, 1400 or 900 min^{-1}, base the selection on the gear unit nominal rating.

4.2 Selecting a speed reducer

a) Determine service factor $\mathbf{f_s}$.

b) Determine the computational torque $\mathbf{M_{c2}}$:

$$M_{c2} = M_{r2} \times f_s \qquad (11)$$

c) Determine the required gear ratio:

$$i = \frac{n_1}{n_2} \qquad (12)$$

d) Consult the «Speed reducer rating charts» and locate the frame size that, for drive speed **n1** and gear ratio closest to **[i]** features a rated torque M_{n2} that satisfies the following condition:

$$M_{n2} \geq M_{c2} \qquad (13)$$

Check applicability of the electric motor selected at chapter: «Motor availability».

Bonfiglioli Riduttori

5 VERIFICATION

After the selection of the speed reducer, or gearmotor, is complete it is recommended that the following verifications are Conducted:

a) Maximum torque
The maximum torque (intended as instantaneous peak load) applicable to the gearbox must not, in general, exceed 150% of rated torque $\mathbf{M_{n2}}$. Upon evaluation and approval of Bonfiglioli Technical Service peak values up to 300% may be admitted.
For three-phase switch-pole motors, it is recommended to pay attention to the switching torque which is generated when switching from high to low speed, because it could be significantly higher than maximum torque.
A simple, economical way to minimize overloading is to power only two phases of the motor during switch-over (power-up time on two phases can be controlled with a time-relay):

Switching torque $\mathbf{Mg_2 = 0.5 \times Mg_3}$	
$\mathbf{Mg_2}$	Switching torque with two phase power-up
$\mathbf{Mg_3}$	Switching torque with three-phase power-up

b) Radial loads
Make sure that radial forces applying on input and/or output shaft are within permittend catalogue values. If they were higher consider designing a different bearing arrangement before switching to a larger gear unit.
Catalogue values for rated overhung loads refer to mid-point of shaft under study.
Should application point of the overhung load be localised further out the revised loading capability must be adjusted as per instructions given in this manual.

c) Thrust loads
Actual thrust load must be found within 20% of the equivalent overhung load capacity.
Should an extremely high thrust, or a combination of radial and axial load apply, consult Bonfiglioli Technical Service.

d) Starts per hour
For duties featuring a high number of switches the actual starting capability in loaded condition [Z] must be calculated.
Actual number of starts per hour must be lower than value so calculated.

6 INSTALLATION

6.1 General instructions

a) Make sure that the gearbox is securely bolted to avoid vibrations in operation. If shocks or overloads are expected, fit hydraulic couplings, clutches, torque limiters, etc.

b) Before being paint coated, any machined surfaces and the outer face of the oil seals must be protected to prevent paint drying out the rubber and jeopardising the sealing function.

c) Parts fitted on the gearbox output shaft must be machined to ISO H7 tolerance to prevent interference fits that could damage the gearbox itself. Further, to mount or remove such parts, use suitable pullers or extraction devices using the tapped hole located at the top of the shaft extension.

d) Mating surfaces must be cleaned and treated with suitable protective products before mounting to avoid oxidation and, as a result, seizure of parts.

e) Prior to putting the gear unit into operation make sure that the equipment that incorporates the same complies with the current revision of the Machines Directive 2006/42/CE.

f) Before starting up the machine, make sure that oil level is suitable for the mounting position specified for the gear unit and the viscosity is adequate.

g) For outdoor installation provide adequate guards in order to protect the drive from rainfalls as well as direct sun radiation.

6.2 Commissioning of W gear units

Gear units type W63, W75 and W86 feature a side cover carrying a blank plug for transportation purposes.
Prior to putting the gearbox into service the blank plug must be replaced by the breather plug that is supplied with each unit.
See figure below:

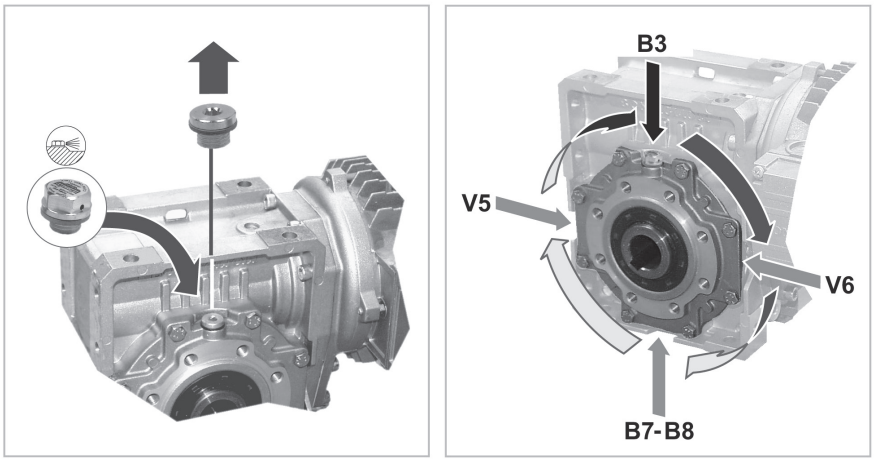

Note that the blind plug MUST BE LEFT IN PLACE when the reducer is fitted in mounting position B6.

7 LUBRICATION

Life lubricated gearboxes do not require any periodical oil changes.
Refer to the User's Manual available at www.bonfiglioli.com for indications about checking the oil level and its replacement for other types of gearboxes.
Do not mix mineral oils with synthetic oils and/or different brands.
However, oil level should be checked at regular intervals and topped up as required.
Check monthly if unit operates under intermittent duty, more frequently if duty is continuous.

7.1 Selection of the optimal oil viscosity (data relating to Shell Oils)

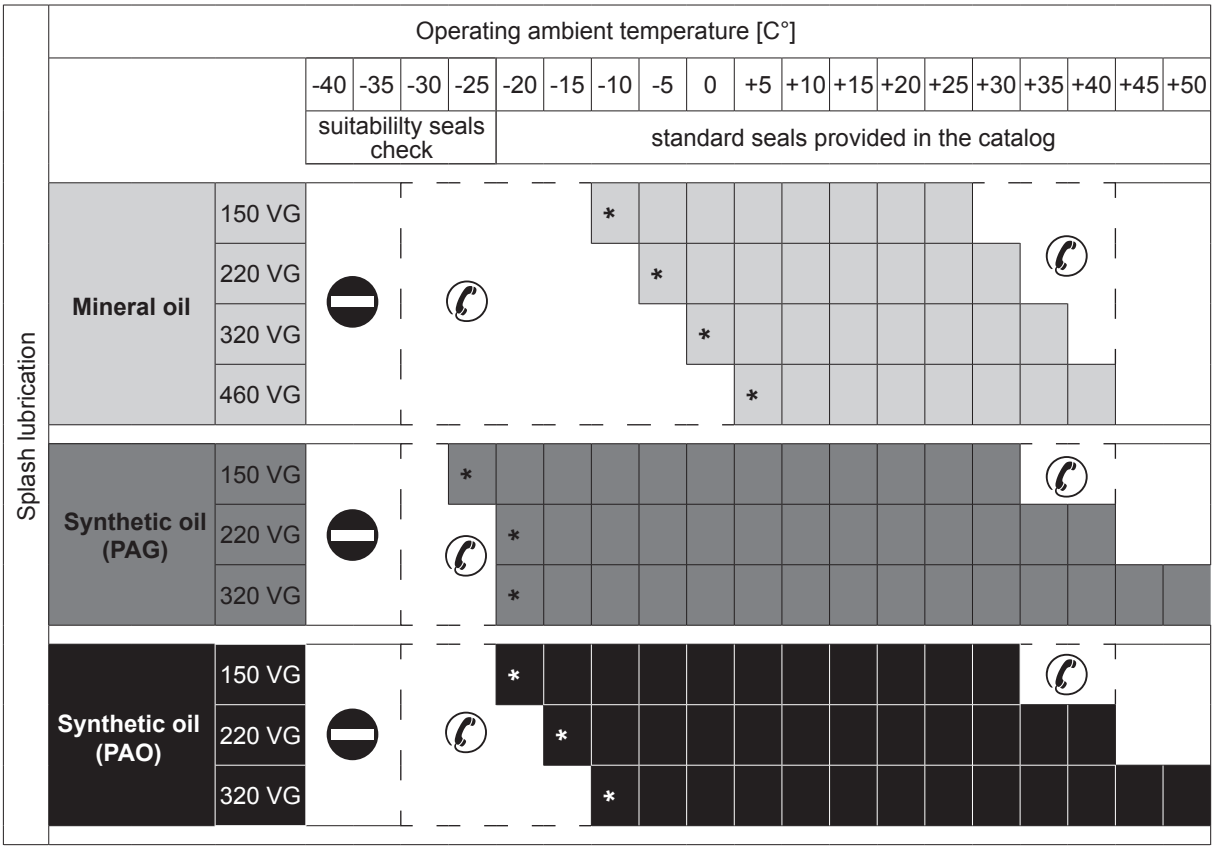

Recommended operating limits

Allowed operating limits.

Forbidden operating limits.

* = It is recommended to ramp-up and to provide for greater absorption of the motor.
If needed and in the event of impulse loads, contact Bonfiglioli Technical Service.

7.2 Lubrication for W and VF

Frame sizes VF 27 ... VF 49, W 63 ... W 86 are supplied by the factory, or by authorized dealers, already filled with “long life” synthetic oil. On request, these units can be supplied unlubricated, in which case, the option **SO** must be specified on the order. The applicability of the option is described in the chapter “GEARBOX OPTIONS”.
Unless otherwise specified, units type VF 130 ... VF 250 and W 110 are generally supplied unlubricated at it is the customer’ responsibility to fill them with oil prior to putting them into operation. By requesting the **LO** option at the time of order, these units will be factory filled with synthetic lubricant in the quantity relevant to the mounting position that was specified in the purchase order. The applicability of the option is described in the chapter “GEARBOX OPTIONS”.
Double worm gears type VF/VF, VF/W and W/VF consist of two separate units, independently lubricated.
For the reference charts of oil plugs placement and quantity of lubricant, refer to the Installation, Operation and Maintenance Manual (available on www.bonfiglioli.com).
In the absence of contamination, the “long life” synthetic lubricant supplied by the factory, does not require periodical changes throughout the lifetime of the gear unit.

8 STORAGE

Observe the following instructions to ensure correct storage of the products:

a) Do not store outdoors, in areas exposed to weather or with excessive humidity.

b) Always place boards, wood or other material between the products and the floor.
The gearboxes should not have direct contact with the floor.

c) In case of long-term storage all machined surfaces such as flanges, shafts and couplings must be coated with a suitable rust inhibiting product (Mobilarma 248 or equivalent).
Furthermore gear units must be placed with the fill plug in the highest position and filled up with oil.
Before putting the units into operation the appropriate quantity, and type, of oil must be restored.

9 CONDITIONS OF SUPPLY

Gear units are supplied as follows:

a) configured for installation in the mounting position specified at the time of order;

b) tested to manufacturer specifications;
c) mating machined surfaces come unpainted;

d) nuts and bolts for mounting motors are provided;

e) shafts are protected during transportation by plastic caps;

f) supplied with lifting lug (where applicable).

10 DESIGN FEATURES

10.1 Key features common to all Bonfiglioli worm gears

− Symmetrical hollow output shaft for facilitated mounting of the gear unit and plug-in shafts (after-sales kit only) on either side.
− Ground finished wormshafts and precise machining lend optimal efficiency and extremely low noise in operation.
− Numerous product configurations allow for foot, flange or shaft mounting. Torque arm is available as an option.
− Extensive customisation possible through the range of standard options available.

10.2 Key features of VF-style worm gears

− Die cast aluminium gear cases for VF27, VF30, VF44 and VF49. Sturdy cast iron for VF130 through VF250. The latter group is paint coated with thermo setting epoxy powder.

10.3 Key features of W-style worm gears

− Rigid monobloc gear case made from Aluminium.
− The cubic shape of the gear case and machining of all sides lend extreme flexibility for the installation of the gearbox and ancillary devices.
− The integral gearmotor configuration is lightweight, compact and price effective.
− Input shaft oil seal of W63, W75 and W86 units is located internally, and made from a Fluoro elastomer compound for improved durability and extended lifetime.

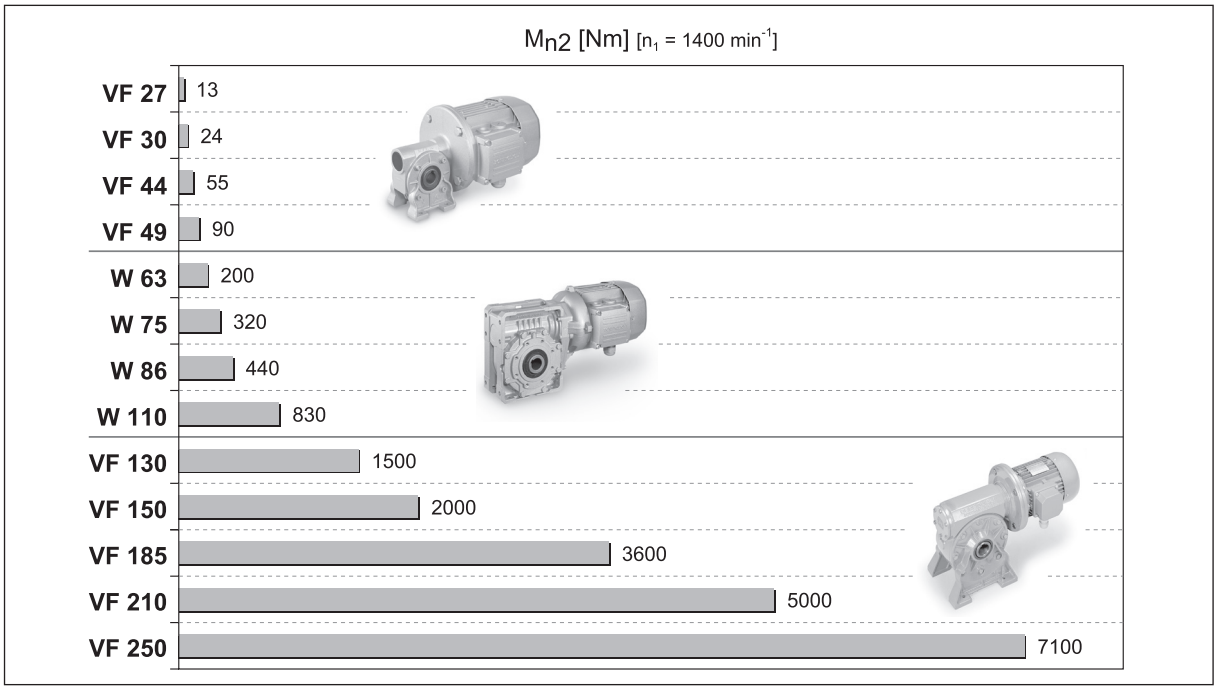

11 VERSIONS

VF_

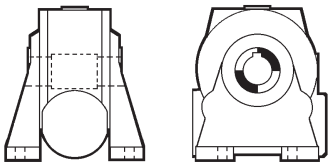

N **VF 27 ... VF 250**

Foot mounted, underdriven

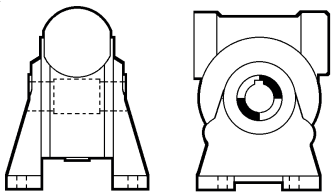

A **VF 27 ... VF 250**

Foot mounted, overdriven

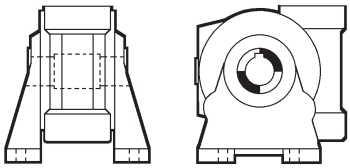

V **VF 27 ... VF 250**

Foot mounted, wormshaft vertical

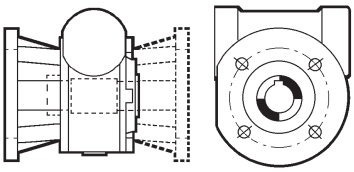

F 1 F 2
FA 1 FA 2

F **VF 27 ... VF 185**

Standard flange

FA **VF 44 ... VF 49**

Extended output flange

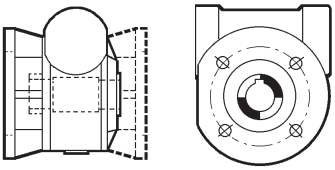

FC 1 FC 2
FR 1 FR 2

FC **VF 130 ... VF 185**

Short flange

FR **VF 130 ... VF 185**

Short flange and reinforced bearings

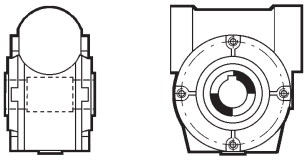

P 1 P 2
(VF 30...VF 250) (VF 130...VF 185)

P **VF 30 ... VF 250**

Side cover for shaft mounting

P1 = P2	VF 30 ... VF 49 VF 210, VF 250

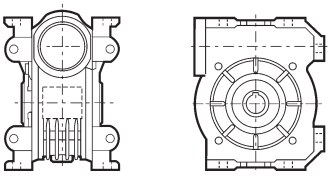

U **VF 30 ... VF 49**

Foot mount

W_

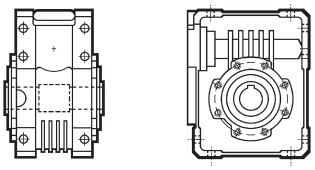

U **W 63 ... W 110**

Universal gear case

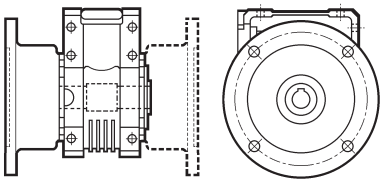

UF 1 UF 2

UF **W 63 ... W 110**

Standard mounting flange

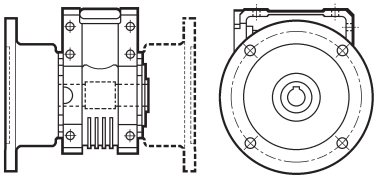

UFC 1 UFC 2
UFCR 1 UFCR 2

UFC **W 63 ... W 110**

Mounting flange reduced in length

UFCR **W 75**

Mounting flange reduced in length and diameter

12 ARRANGEMENTS

For combined worm gear units, unless otherwise specified at the time of ordering, the arrangements highlighted in grey in the diagrams below will be configured at the factory.

	CW1	CCW1	CW2	CCW2	CW3	CCW3	CW4	CCW4
U	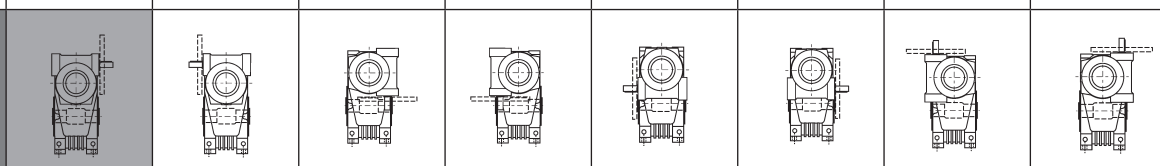							
UF_ UFC_ UFRC_	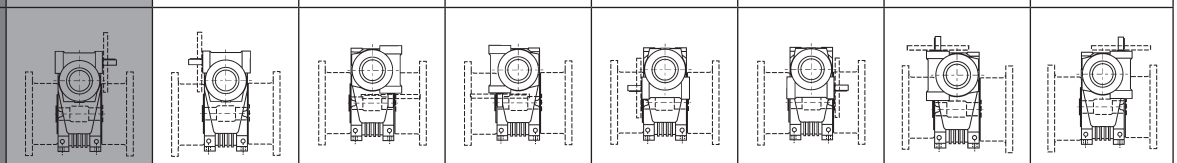							
N	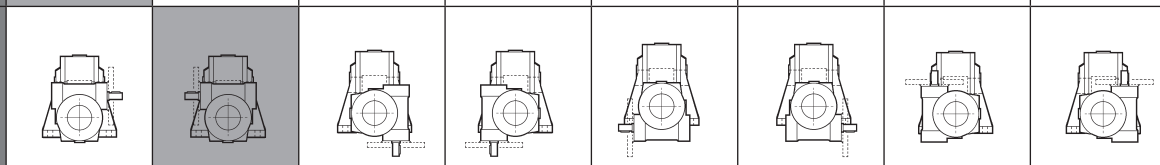							
A	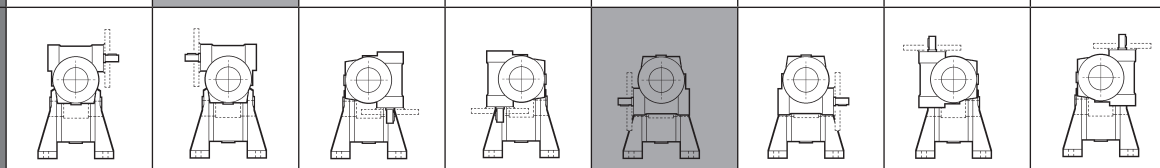							
V	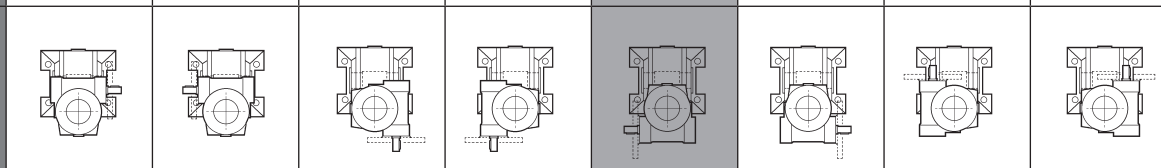							
F1 FA1 FC1 FR1	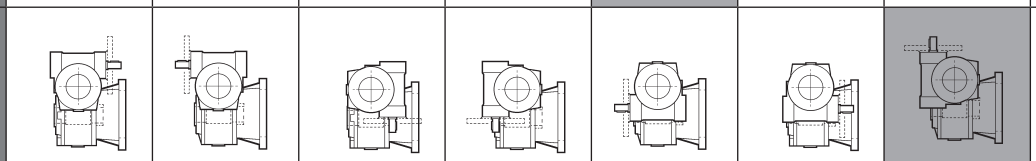							
F2 FA2 FC2 FR2	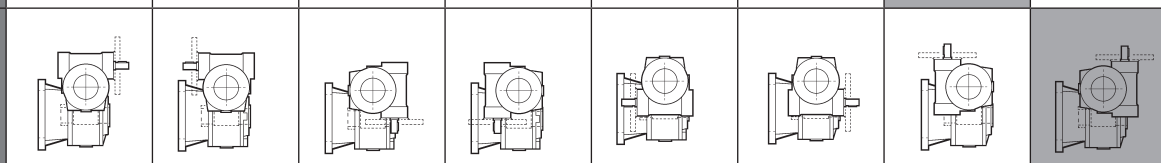							
P1	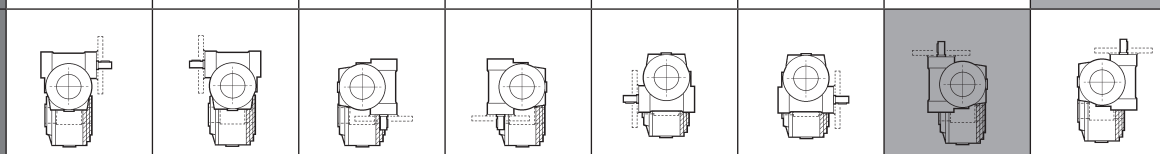							
P2	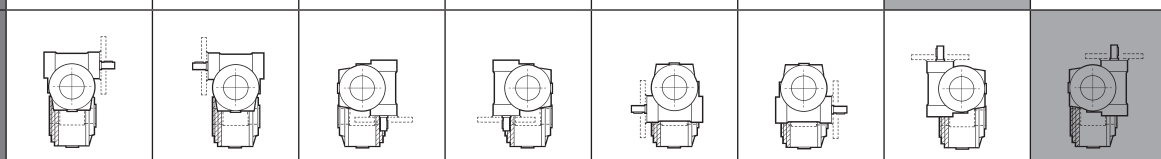							

Shaft-mount cover

For units with the HS input (free shaft), all the mounting options shown are available.
For units with the P (IEC), certain mounting options can be obtained only by using IEC flanges (B5 or B14) of the same size or smaller than those shown in following table.

		CW1 CCW1	CW2 CCW2	CW3	CCW3	CW4 CCW4
VF/VF30/44	A, N, V, P1	63B14	63B14	63B14	63B14	63B14
	F-FA					
VF/VF30/49	A, N, V, P1	63B14	63B14	63B14	63B14	63B14
	F-FA					
VF/W30/63	U	63B5-63B14	63B5-63B14	63B5-63B14	63B5-63B14	63B5-63B14
	UF-UFC					
VF/W44/75	U	71B5-71B14	71B5-71B14	71B5-71B14	71B5-71B14	71B5-71B14
	UF-UFC-UFCR					
VF/W44/86	U	71B5-71B14	71B5-71B14	71B5-71B14	71B5-71B14	71B5-71B14
	UF-UFC					
VF/W49/110	U	80B5-80B14	80B5-80B14	80B5-80B14	80B5-80B14	80B5-80B14
	UF-UFC					
W/VF63/130	N	71B5-90B14	90B5-90B14	71B5-90B14	71B5-90B14	71B5-90B14
	A	90B5-90B14	71B5-90B14	90B5-90B14	90B5-90B14	90B5-90B14
	V		90B5-90B14			—
	F1	90B5-90B14	71B5-90B14	90B5-90B14	71B5-90B14	90B5-90B14
	FC1-FR1					
	P1				90B5-90B14	
	F2	90B5-90B14	71B5-90B14	71B5-90B14	90B5-90B14	90B5-90B14
	FC2-FR2					
	P2			90B5-90B14		
W/VF86/150	N	112B5-112B14	112B5-112B14	71B5-112B14	71B5-112B14	71B5-112B14
	A	112B5-112B14	90B5-112B14	112B5-112B14	112B5-112B14	112B5-112B14
	V	112B5-90B14	112B5-90B14			71B5-112B14
	F1	112B5-112B14	71B5-90B14	112B5-112B14	71B5-90B14	112B5-112B14
	FC1-FR1					
	P1		90B5-112B14		112B5-112B14	
	F2	112B5-112B14	71B5-90B14	71B5-90B14	112B5-112B14	112B5-112B14
	FC2-FR2					
	P2		90B5-112B14	112B5-112B14		
W/VF86/185	N	112B5-112B14	112B5-112B14	90B5-112B14	90B5-112B14	90B5-112B14
	A	90B5-112B14		112B5-112B14	112B5-112B14	112B5-112B14
	V	112B5-90B14	90B5-112B14			90B5-112B14
	F1	112B5-112B14	90B5-112B14	112B5-112B14	90B5-112B14	112B5-112B14
	FC1-FR1					
	P1				112B5-112B14	
	F2	112B5-112B14	90B5-112B14	90B5-112B14	112B5-112B14	112B5-112B14
	FC2-FR2					
	P2			112B5-112B14		
VF/VF130/210	N	#	132B5	#	#	#
	A	132B5	#	132B5	132B5	132B5
	V					
	P					
VF/VF130/250	N	#	132B5	#	#	#
	A	132B5	#	132B5	132B5	132B5
	V		132B5			
	P		#			

Consult our Technical Service

12.1 Terminal box position

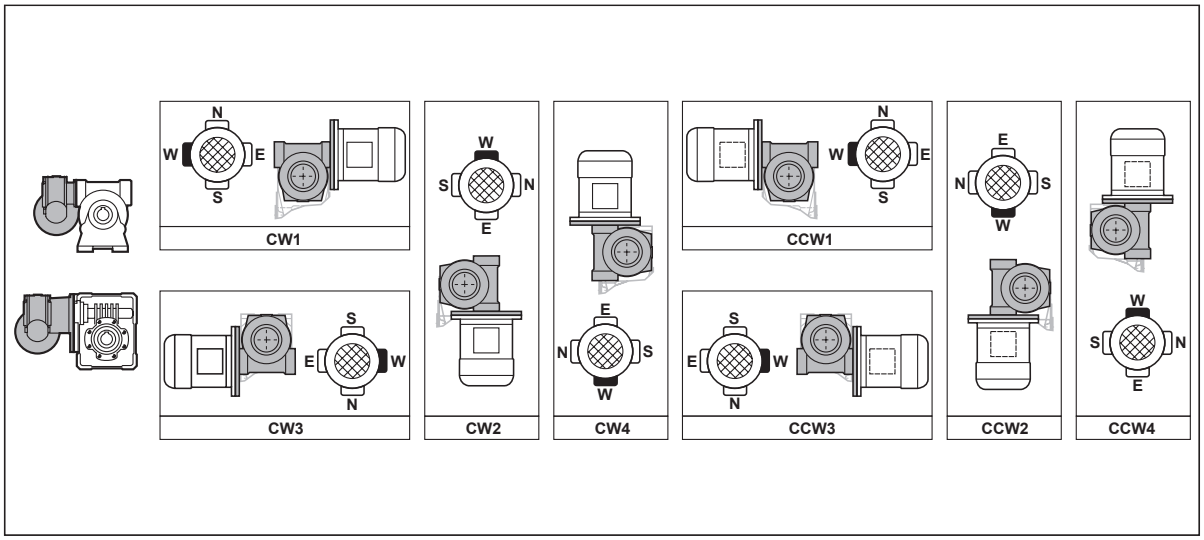

13 DESIGNATION

GEAR UNIT

W 63 L1 UF1 — 24 S2 — B3 ....

OPTIONS

MOUNTING ARRANGEMENT

VF/VF, VF/W, W/VF	**CW (1, 2, 3, 4)** **CCW (1, 2, 3, 4)**

MOUNTING POSITION

VF 27...VF 49 VFR 44, VFR 49	**B3**
W, WR VF 130...VF 250 VFR 130...VFR 250	**B3** (default), **B6**, **B7**, **B8**, **V5**, **V6**
VF/VF VF/W W/VF	**B3** (default), **B6**, **B7**, **B8**, **V5**, **V6**

MOTOR MOUNTING

B5	(VF 30...VF 250, VFR 49...VFR 250, W, WR)
B14	(VF 30…VF 49, W)

INPUT CONFIGURATION

	VF	VFR	W	WR	VF/VF	VF/W	W/VF
P(IEC)	P27 (VF 27 only), P56...P225	P63, P80...P160	P71...P132	P63...P112	P56, P63, P90...P132	P56...P80	P71...P112
S_	⊖	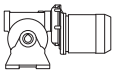 S44 (VFR 44 only)	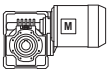 S1...S3	⊖	⊖	⊖	S1...S3
HS							

GEAR RATIO

SHAFT BORE

W 75 VF/W 44/75	**D30** (default), **D28** (on request)

VERSION

TORQUE LIMITER

VF, VFR W, WR	**L1**, **L2**		VF/VF	**LF**

GEAR FRAME SIZE

VF	**27**, **30**, **44**, **49**, **130**, **150**, **185**, **210**, **250**
VFR	**44**, **49**, **130**, **150**, **185**, **210**, **250**
W, WR	**63**, **75**, **86**, **110**

VF/VF	**30/44**, **30/49**, **130/210**, **130/250**
VF/W	**30/63**, **44/75**, **44/86**, **49/110**
W/VF	**63/130**, **86/150**, **86/185**

GEAR TYP

VF, **W**	Worm gearbox
VFR, **WR**	Helical-worm gear unit
VF/VF, **VF/W**, **W/VF**	Combined gearbox

Bonfiglioli Riduttori

MOTOR | BRAKE

BN 63A 4 230/400-50 IP54 CLF ..... **W** **FD** 3.5 R SB 220 SA .....

OPTIONS

BRAKE SUPPLY

RECTIFIER TYPE
AC/DC
NB, **SB**, **NBR**, **SBR**

BRAKE HAND RELEASE
R, **RM**

BRAKE TORQUE

BRAKE TYPE
FD (d.c. brake)
FA (a.c. brake)

TERMINAL BOX POSITION
W (default), **N**, **E**, **S**

MOTOR MOUNTING
— (compact motor)
B5, B14 (IEC - motor)

INSULATION CLASS
CL F standard
CL H option

DEGREE OF PROTECTION
IP55 standard (IP54 - brake motor)

VOLTAGE - FREQUENCY

POLE NUMBER
2, **4**, **6**, **2/4**, **2/6**, **2/8**, **2/12**, **4/6**, **4/8**

MOTOR SIZE
1SC ... 3LC (compact motor)
56A ... 225M (IEC motor) BN 27, BN 44 (special motors)

MOTOR TYPE
M = compact 3-phase
BN = IEC 3-phase

14 GEARBOX OPTIONS

SO

Gear units VF 30 ... VF 49, W 63 ... W 86, usually factory filled with oil, are, in this case, supplied unlubricated.

LO

Gearboxes VF 130…VF 250 and W 110, usually supplied unlubricated, to be filled with synthetic oil currently used by BONFIGLIOLI RIDUTTORI according to the mounting position specified.
The applicability of the LO option is described in the table below.

	LO					
	Mounting position					
	B3	**B6**	**B7**	**B8**	**V5**	**V6**
W 110 U-UF-UFC	X	X	X	X	⊖	⊖
VF 130 A-N-P-F-FC	X	X	X	X	⊖	⊖
VF 130 V	⊖	X	X	⊖	X	X
VF 130 FR	X	⊖	⊖	X	⊖	⊖
VF 150 A-N-P-F-FC	X	X	X	X	⊖	⊖
VF 150 V	⊖	X	X	⊖	X	X
VF 150 FR	X	⊖	⊖	X	⊖	⊖
VF 185 A-N-P-F-FC	X	X	X	X	⊖	⊖
VF 185 V	⊖	X	X	⊖	X	X
VF 185 FR	X	⊖	⊖	X	⊖	⊖
VF 210 A-N-P	X	⊖	⊖	X	⊖	⊖
VF 210 V	⊖	⊖	⊖	⊖	X	X
VF 250 A-N-P	X	⊖	⊖	X	⊖	⊖
VF 250 V	⊖	⊖	⊖	⊖	X	X

RB

Double-ended input shaft at non-drive- end (with the exception of VF 27).

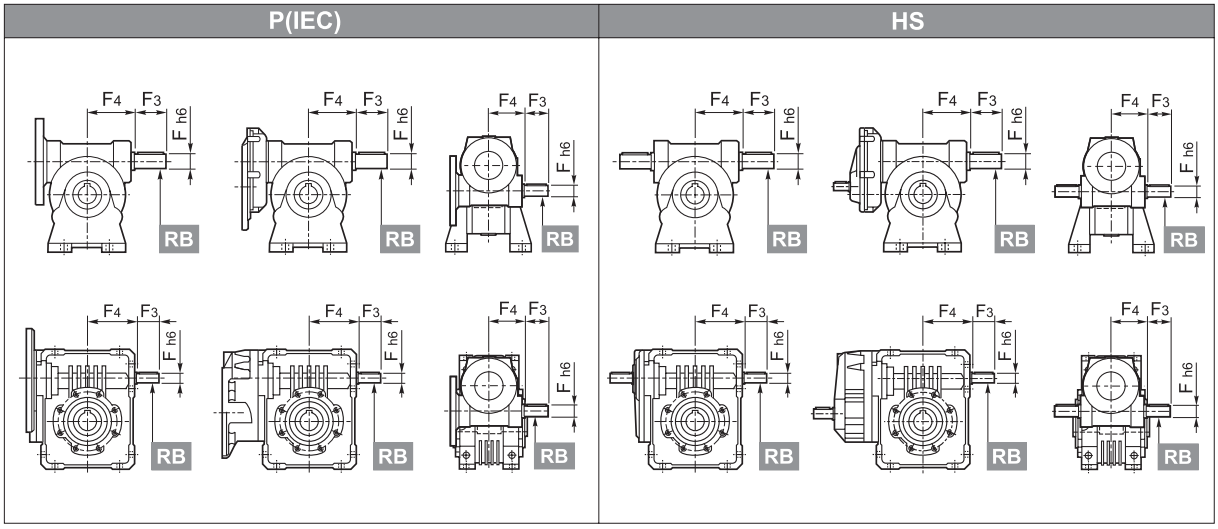

RBO

Double-ended input shaft at N.D.E. of 2nd gearbox (combined execution only)

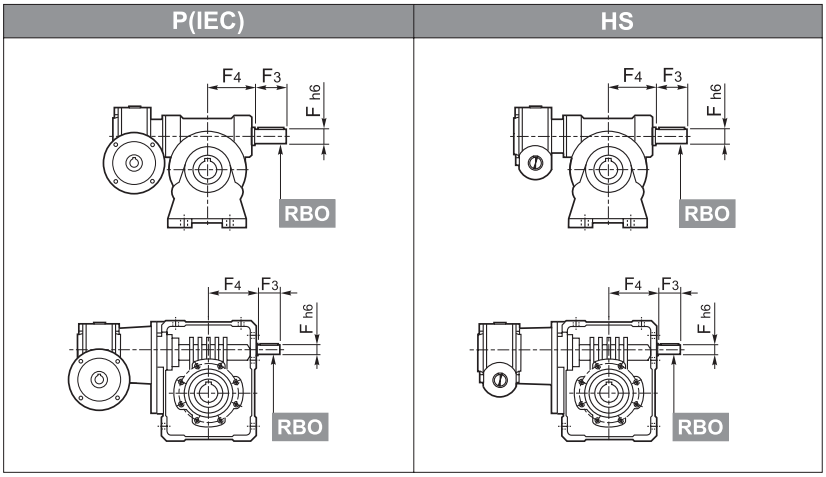

Extended input shaft dimensions (options RB and RBO)

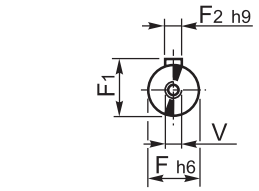

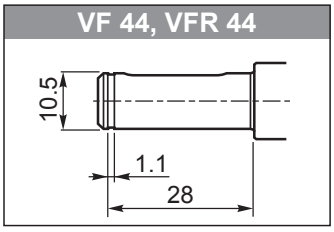

		F	F_1	F_2	F_3	F_4	V
VF VFR VF/VF	30	9	10.2	3	20	50	—
	44	11	12.5	4	30	56	—
	49	16	18	5	40	65	M6
W WR VF/W	63	18	20.5	6	40	74	M6
	75	19	21.5	6	40	88.5	M6
	86	25	28	8	50	101.5	M8
	110	25	28	8	60	127.5	M8
VF VFR W/VF	130	30	33	8	60	160	M8
	150	35	38	10	65	185	M8
	185	40	43	12	70	214.5	M8
	210	48	51.5	14	82	185	M16x40
	250	55	59	16	82	228	M16x40

A and **P** versions of VF 210 and VF 250 feature the fan cooling as a standard, however forced ventilation is not feasible should the **RB** option be specified.

VV

Fluoro elastomer oil seal on input shaft. The option is available for W110 and for units of the VF series, barring all VF 30's c/w option RB and VF 30_HS.

PV

Oil seals from Fluoro elastomer compound on both the input and the output shaft, barring all VF 30's c/w option RB and VF 30_HS.

KA

VF_A interchangeability kit. Option is available for units W 63 to W 110.

KV

VF_V interchangeability kit (barring W + option RB and W 110 in B6 mounting position). Option is available for units W 63 to W 110.

AO
Output shaft on side opposite to standard (VF 27).

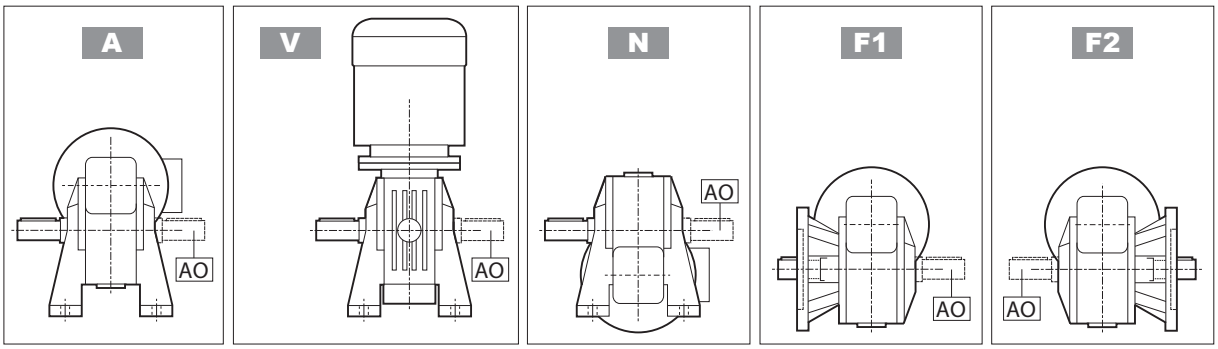

SURFACE PROTECTION

When no specific protection class is requested, the painted (ferrous) surfaces of gearboxes are protected to at least corrosivity class C2 (UNI EN ISO 12944-2). For improved resistance to atmospheric corrosion, gearboxes can be delivered with **C3** and **C4** surface protection, obtained by painting the complete gearbox.

SURFACE PROTECTION	Typical environments	Maximum surface temperature	Corrosivity class according to UNI EN ISO 12944-2
C3	Urban and industrial environments with up to 100% relative humidity (medium air pollution)	120°C	C3
C4	Industrial areas, coastal areas, chemical plant, with up to 100% relative humidity (high air pollution)	120°C	C4

Gearboxes with optional protection to class **C3** or **C4** are available in a choice of colours.
If no specific colour is requested (see the “PAINTING” option) gearboxes are finished in RAL 7042.
Gearboxes can also be supplied with surface protection for corrosivity class **C5** according to UNI EN ISO 12944-2. Contact our Technical Service for further details.

PAINTING

Gearboxes with optional protection to class C3 or C4 are available in the colours listed in the following table.

PAINTING	Colour	RAL number
RAL7042*	Traffic Grey A	7042
RAL5010	Gentian Blue	5010
RAL9005	Jet Black	9005
RAL9006	White Aluminium	9006
RAL9010	Pure White	9010

* Gearboxes are supplied in this standard colour if no other colour is specified.

NOTE – “PAINTING” options can only be specified in conjunction with “SURFACE PROTECTION” options.

CERTIFICATES

AC - Certificate of compliance
The document certifies the compliance of the product with the purchase order and the construction in conformity with the applicable procedures of the Bonfiglioli Quality System.

CC - Inspection certificate
The document entails checking on order compliance, the visual inspection of external conditions and of mating dimensions. Checking on main functional parameters in unloaded conditions is also performed along with oil seal proofing, both in static and in running conditions. Units inspected are sampled within the shipping batch and marked individually.

Motor options
For more detailed information please consult the Electric Motor section in this book.

15 MOUNTING POSITION AND TERMINAL BOX ANGULAR LOCATION

Location of motor terminal box can be specified by viewing the motor from the fan side; standard location is shown in black (W).

The terminal box positions indicated do not apply to VFR 44. Please refer to page 21 and pages 116-117 for designation and identification of design version.

Angular location of the brake release lever.

Unless otherwise specified, brake motors have the manual device side located, 90° apart from terminal box.
Different angles can be specified through the relevant options available.

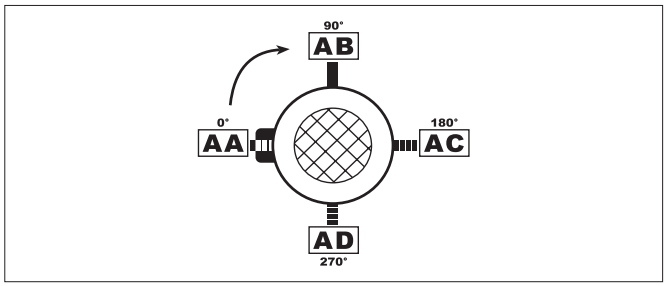

The following pages describe the mounting positions of VF and W series gearboxes.

In the case of VF/VF, VF/W and W/VF gearbox combinations, mounting positions refer to the second (machine side) gearbox. Refer to the “Mounting version” chapter for details of the first (input side) gearbox.

VF 27 _ ... VF 49 _ VFR 44 _ , VFR 49 _

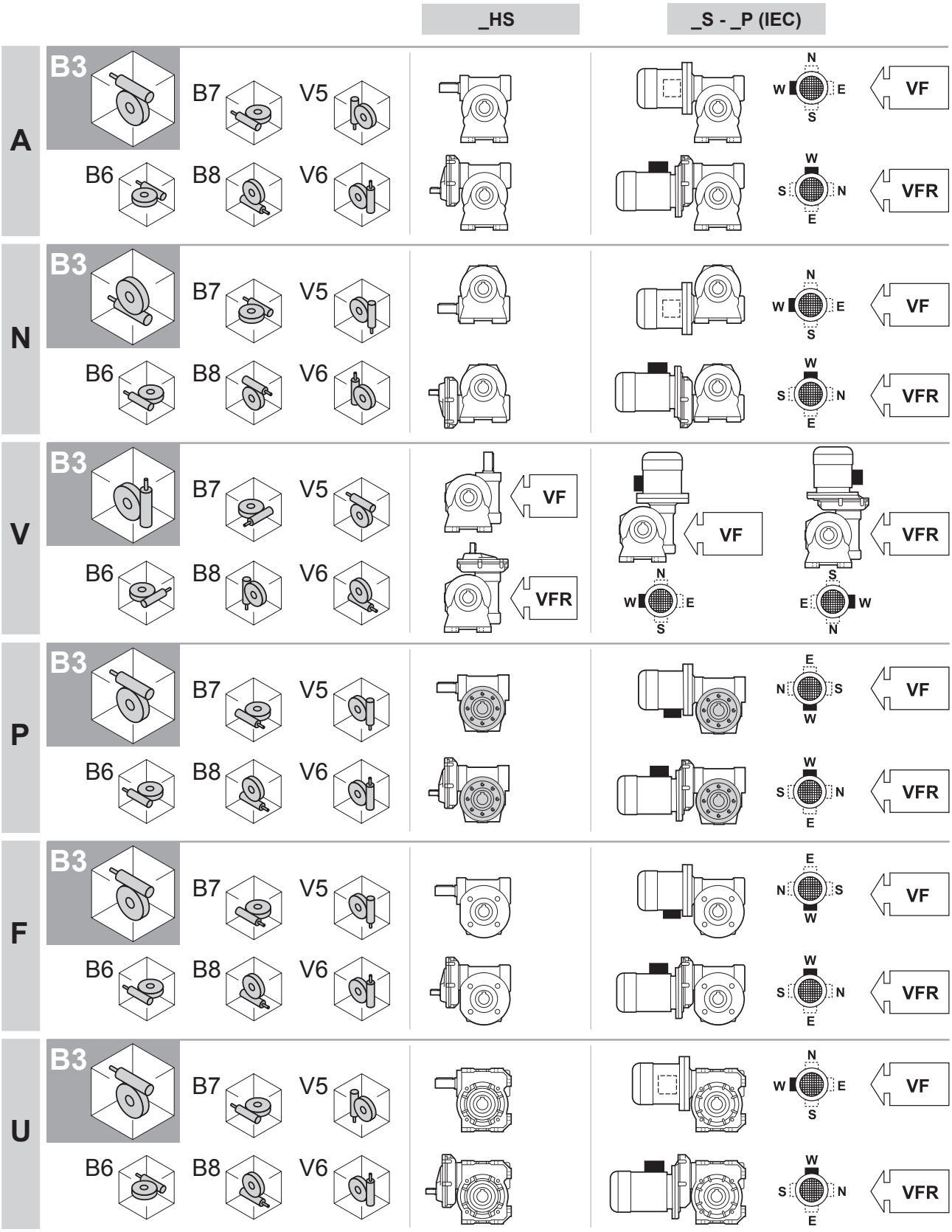

Base mounting position.
Gearboxes are plated only for base mounting position (B3). They can nevertheless also be installed in any of the derived positions (B6, B7, B8, V5, V6). Mounting position may not be changed after installation.

W 63 U ... W 110 U WR 63 U ... WR 110 U

_HS | _S - _P (IEC)

B3

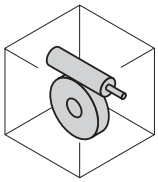

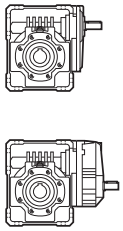

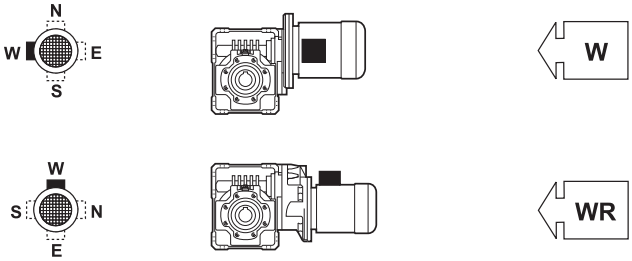

B6

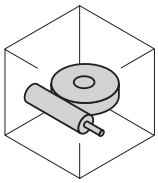

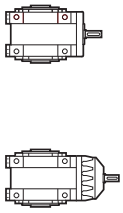

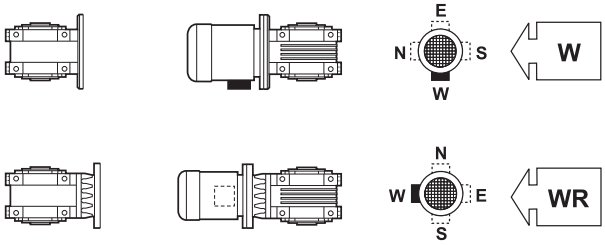

B7

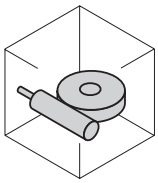

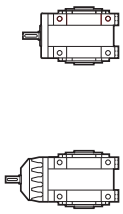

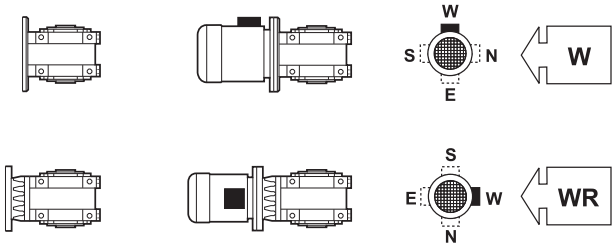

B8

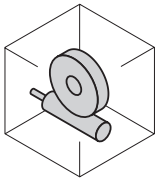

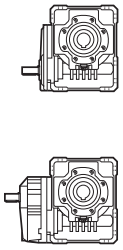

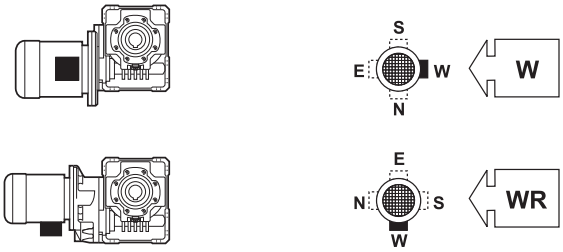

V5

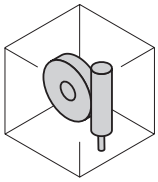

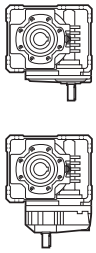

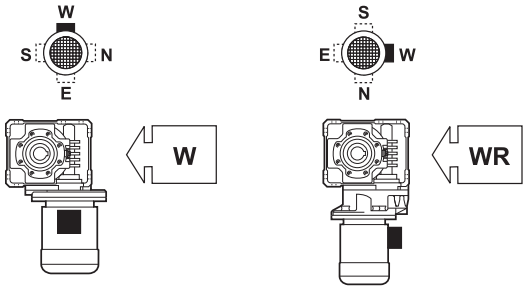

V6

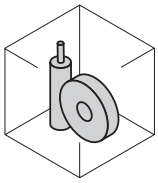

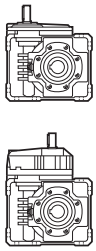

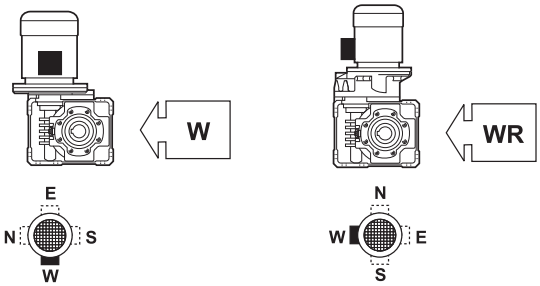

W 63 UF/UFC ... W 110 UF/UFC WR 63 UF/UFC ... WR 110 UF/UFC

_HS | _S - _P (IEC)

B3

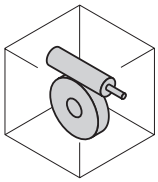

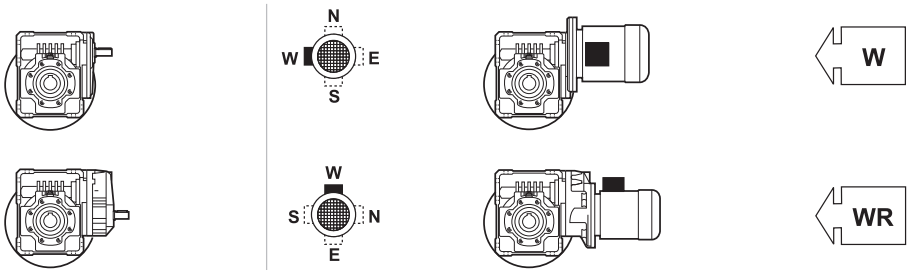

B6

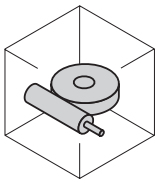

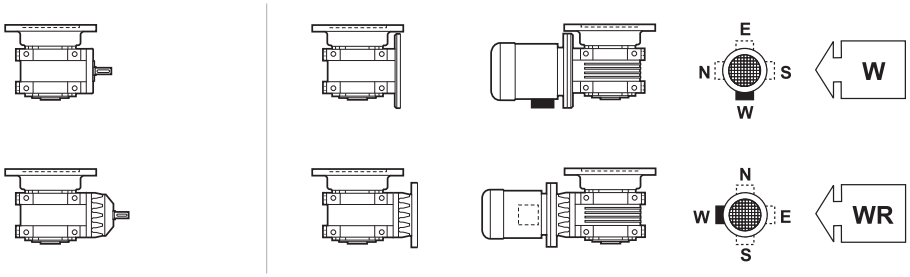

B7

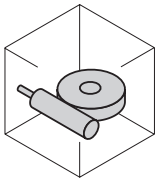

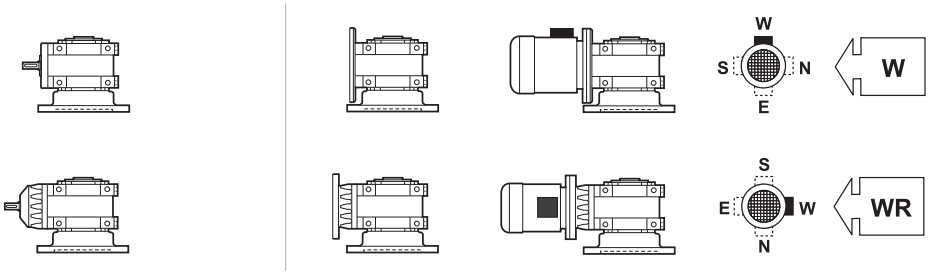

B8

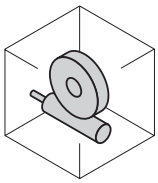

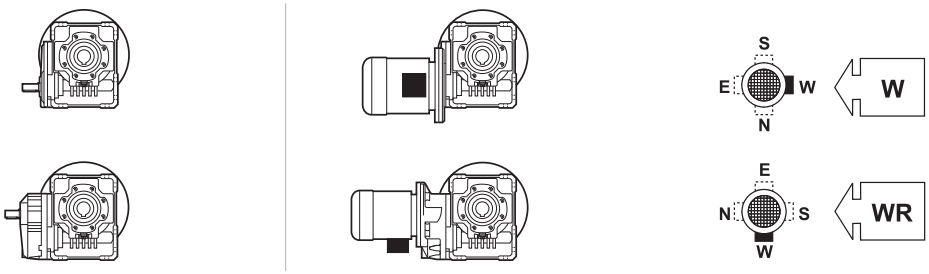

V5

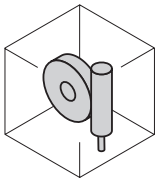

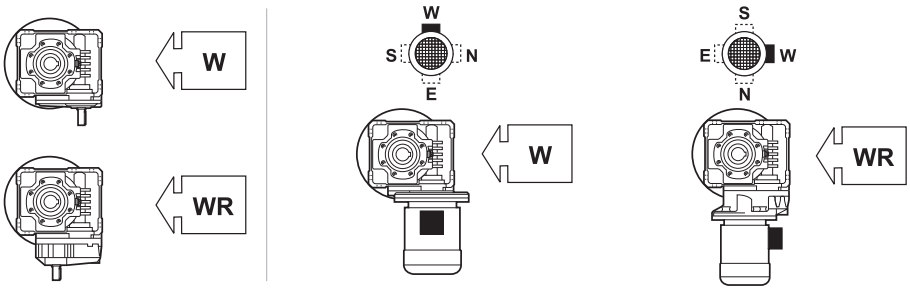

V6

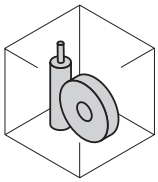

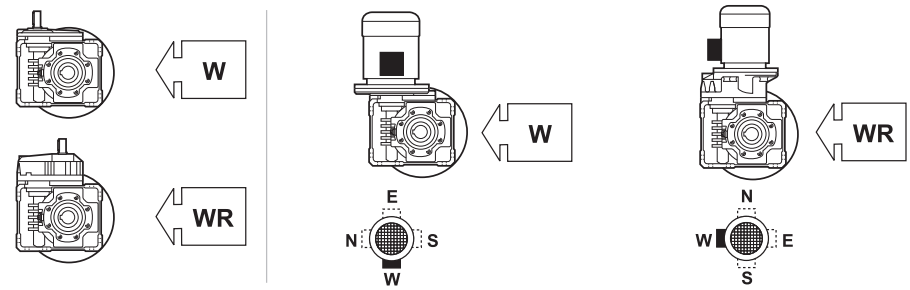

VF 130 A ... VF 250 A VFR 130 A ... VFR 250 A

_HS _P (IEC)

B3

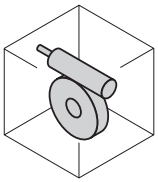

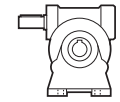

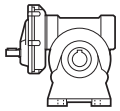

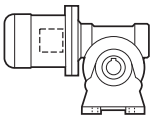

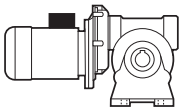

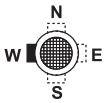

VF

VFR

B6

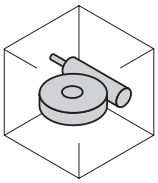

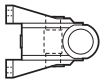

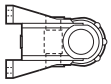

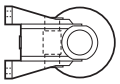

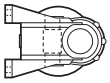

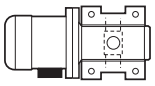

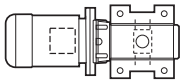

VF

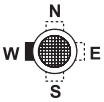

VFR

B7

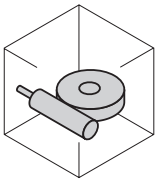

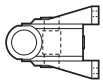

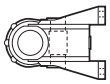

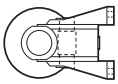

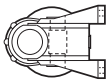

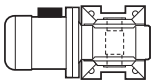

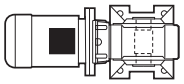

VF

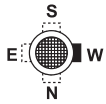

VFR

B8

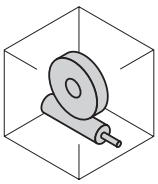

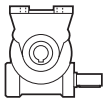

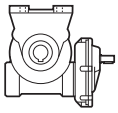

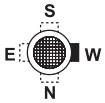

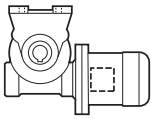

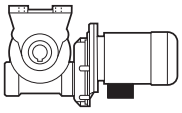

VF

VFR

V5

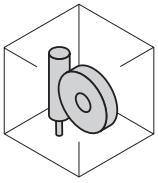

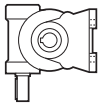

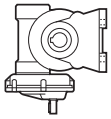

VF

VFR

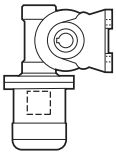

VF

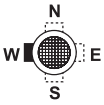

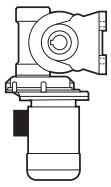

VFR

V6

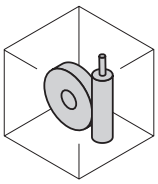

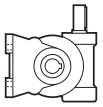

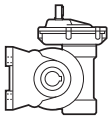

VF

VFR

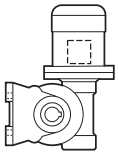

VF

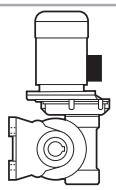

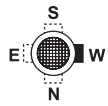

VFR

VF 130 N ... VF 250 N VFR 130 N ... VFR 250 N

_HS | _P (IEC)

B3

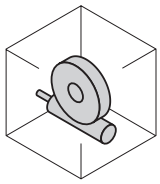

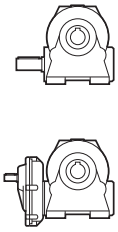

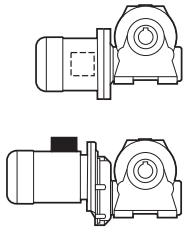

VF

VFR

B6

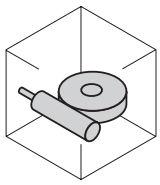

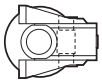

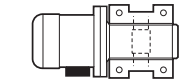

VF

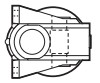

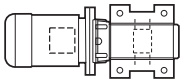

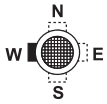

VFR

B7

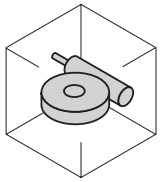

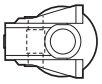

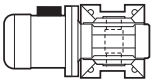

VF

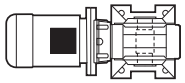

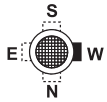

VFR

B8

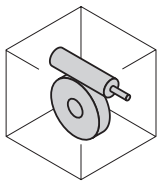

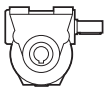

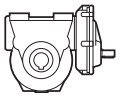

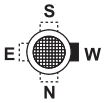

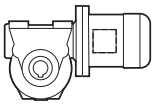

VF

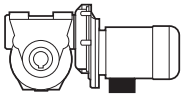

VFR

V5

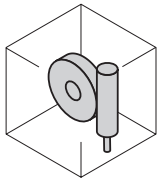

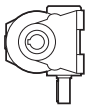

VF

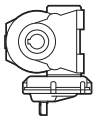

VFR

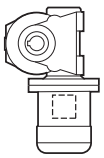

VF

VFR

V6

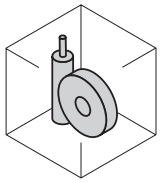

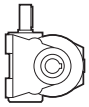

VF

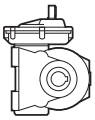

VFR

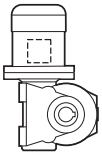

VF

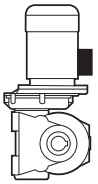

VFR

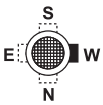

VF 130 V ... VF 250 V VFR 130 V ... VFR 250 V

_HS | _P (IEC)

B3

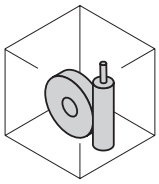

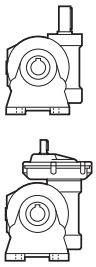

VF

VFR

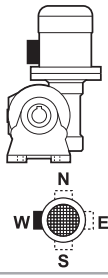

VF

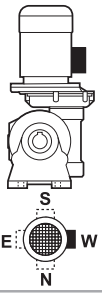

VFR

B6

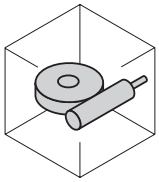

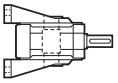

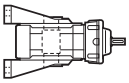

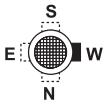

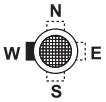

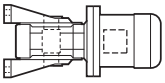

VF

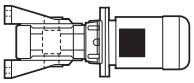

VFR

B7

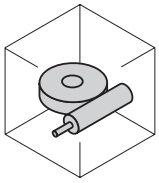

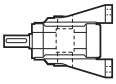

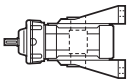

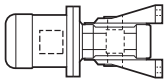

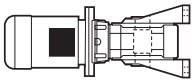

VF

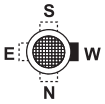

VFR

B8

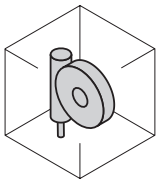

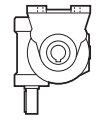

VF

VFR

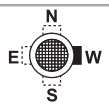

VF

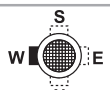

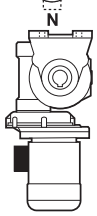

VFR

V5

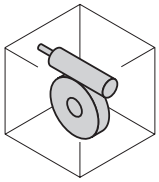

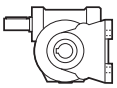

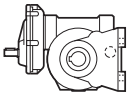

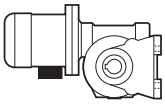

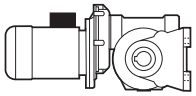

VF

VFR

V6

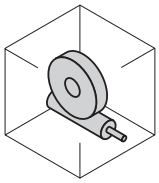

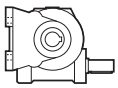

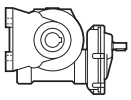

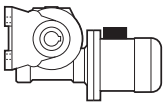

VF

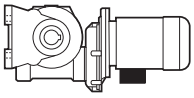

VFR

VF 130 P ... VF 250 P VFR 130 P ... VFR 250 P

_HS | _P (IEC)

B3

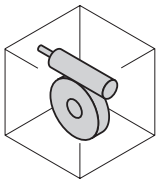

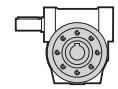

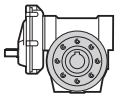

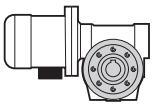

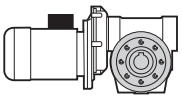

VF

VFR

B6

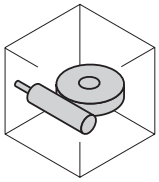

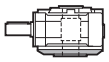

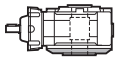

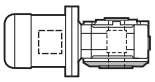

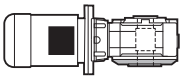

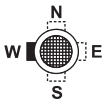

VF

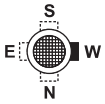

VFR

B7

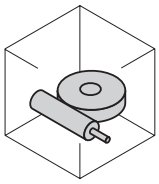

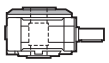

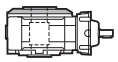

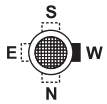

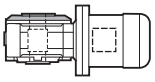

VF

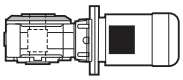

VFR

B8

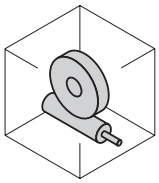

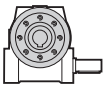

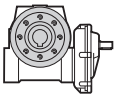

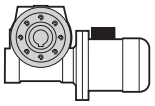

VF

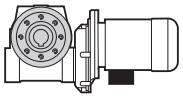

VFR

V5

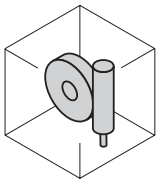

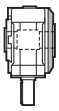

VF

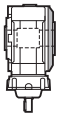

VFR

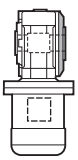

VF

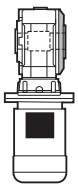

VFR

V6

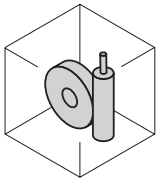

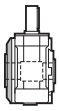

VF

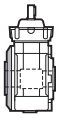

VFR

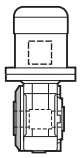

VF

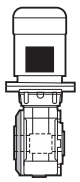

VFR

VF 130 F ... VF 250 F VFR 130 F ... VFR 250 F

_HS | _P (IEC)

B3

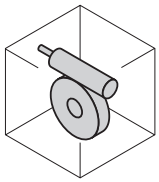

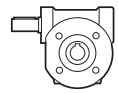

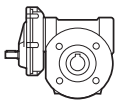

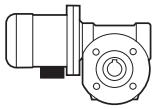

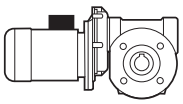

VF

VFR

B6

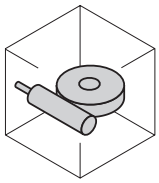

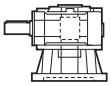

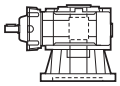

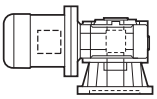

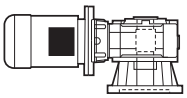

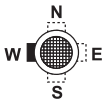

VF

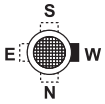

VFR

B7

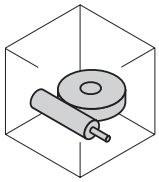

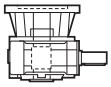

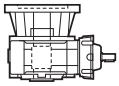

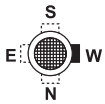

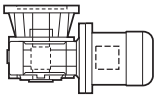

VF

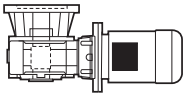

VFR

B8

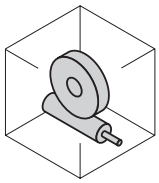

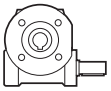

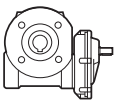

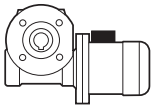

VF

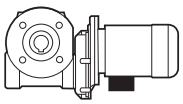

VFR

V5

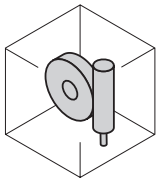

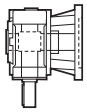

VF

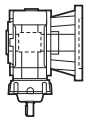

VFR

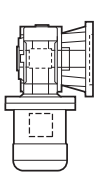

VF

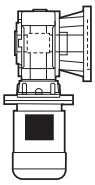

VFR

V6

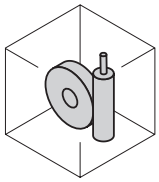

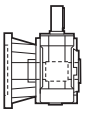

VF

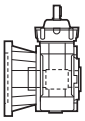

VFR

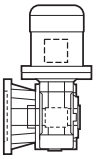

VF

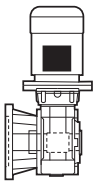

VFR

16 OVERHUNG LOADS

16.1 Calculating the resulting overhung load

External transmissions keyed onto input and/or output shaft generate loads that act radially onto same shaft.
Resulting shaft loading must be compatible with both the bearing and the shaft capacity.
Namely shaft loading (R_{c1} for input shaft, R_{c2} for output shaft), must be equal or lower than admissible overhung load capacity for shaft under study (R_{n1} for input shaft, R_{n2} for output shaft). OHL capability listed in the rating chart section.
In the formulas given below, index (1) applies to parameters relating to input shaft, whereas index (2) refers to output shaft.
The load generated by an external transmission can be calculated with close approximation by the following equation:

$$R_c = \frac{2000 \times M \times K_r}{d}$$

$K_r = 1$	
$K_r = 1.25$	
$K_r = 1.5 - 2.0$	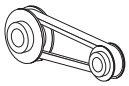

M [Nm]	
d [mm]	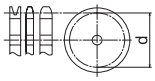

16.2 Overhung loading verification

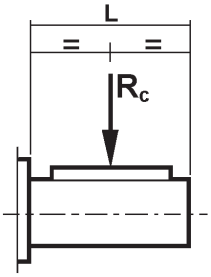

$R_c \leq R_n$

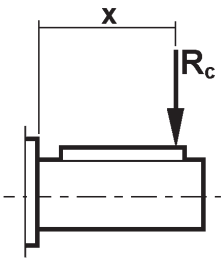

$$R_x = R_n \times \frac{a}{b + x}$$

$R_c \leq R_x$

16.3 Load location factor

	Output shaft		R_{n2} max [N]
	a	b	
VF 27	56	44	600
VF 30	60	45	1700
VF 44 - VFR 44 - VF/VF 30/44	71	51	2500
VF 49 - VFR 49 - VF/VF 30/49	99	69	3450
W 63 - WR 63 - VF/W 30/63	132	102	5000
W 75 - WR 75 - VF/W 44/75	139	109	6200
W 86 - WR 86 - VF/W 44/86	149	119	7000
W 110 - WR 110 - VF/W 49/110	173	136	8000
VF 130 - VFR 130 - W/VF 63/130	182	142	13800
VF 150 - VFR 150 - W/VF 86/150	198	155	16000
VF 185 - VFR 185 - W/VF 86/185	220	170	19500
VF 210 - VFR 210 - W/VF 130/210	268	203	34500
VF 250 - VFR 250 - W/VF 130/250	334	252	52000

17 THRUST LOADS

Permissible thrust loads on input [An1] and output [An2] shafts are obtained from the radial loading for the shaft under consideration [Rn1] and [Rn2] through the following equation:

$$A_{n1} = R_{n1} \times 0{,}2$$
$$A_{n2} = R_{n2} \times 0{,}2 \qquad (14)$$

The thrust loads calculated through these formulas apply to thrust forces occurring at the same time as rated radial loads.
In the only case that no overhung load acts on the shaft the value of the admissible thrust load [A_n] amounts to 50% of rated OHL [R_n] on same shaft.
Where thrust loads exceed permissible value or largely prevail over radial loads, contact Bonfiglioli Riduttori for an in-depth analysis of the application.

Bonfiglioli Riduttori

17.1 Maximum axial loading for FR version

The FR version is designed to meet the requirements of applications entailing very high axial loads. It is available for units size 130, 150 and 185.
This version, within the same external dimensions as the FC version, is capable of bearing axial loads (well above those of the standard versions) indicated in the table below referred to the output shaft, gear ratio [i] and +/- direction of rotation.

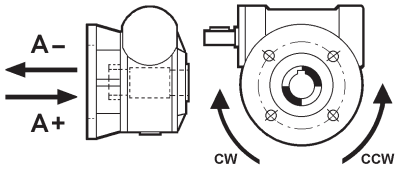

A+ = Compressive load
A- = Pull load
CW = Clockwise rotation
CCW = Counterclockwise rotation

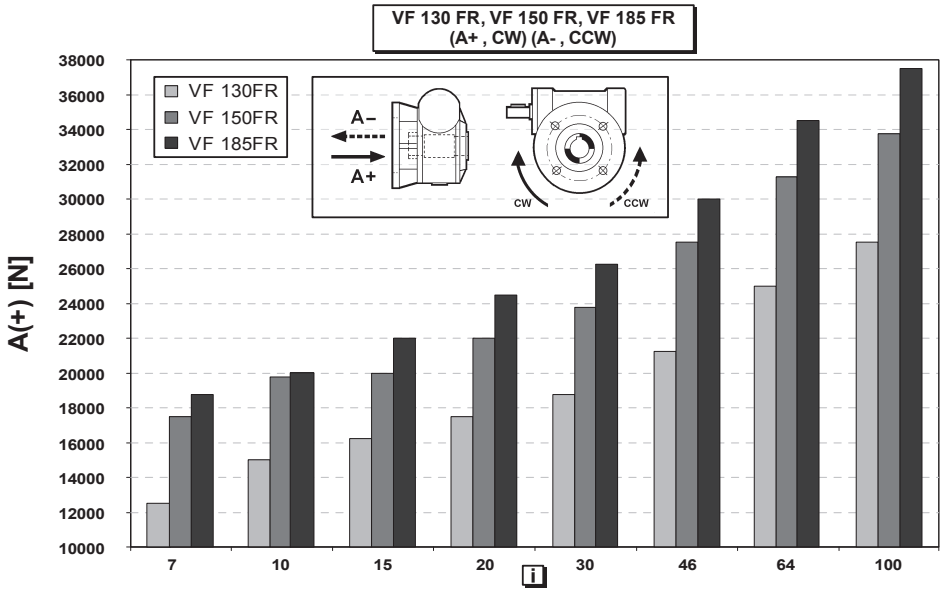

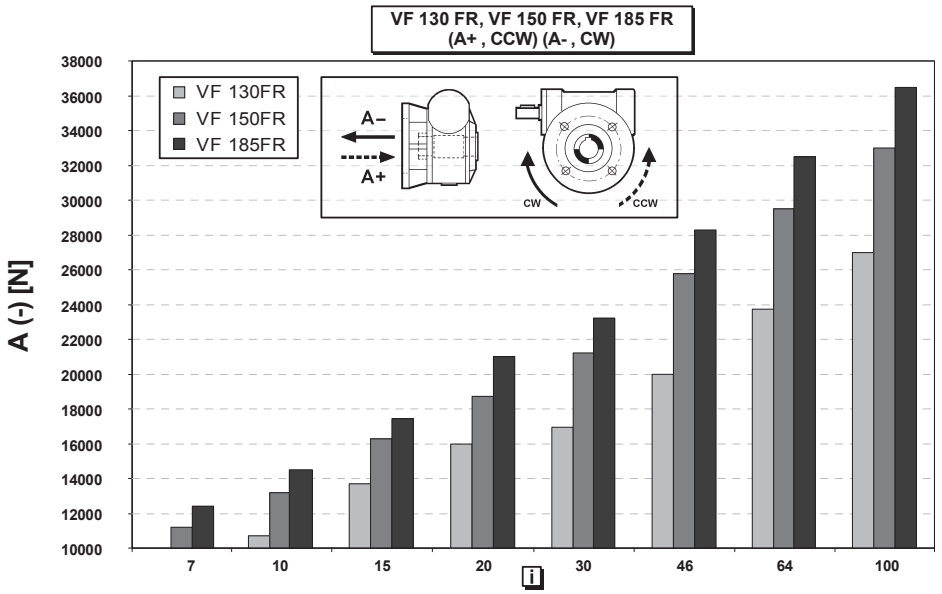

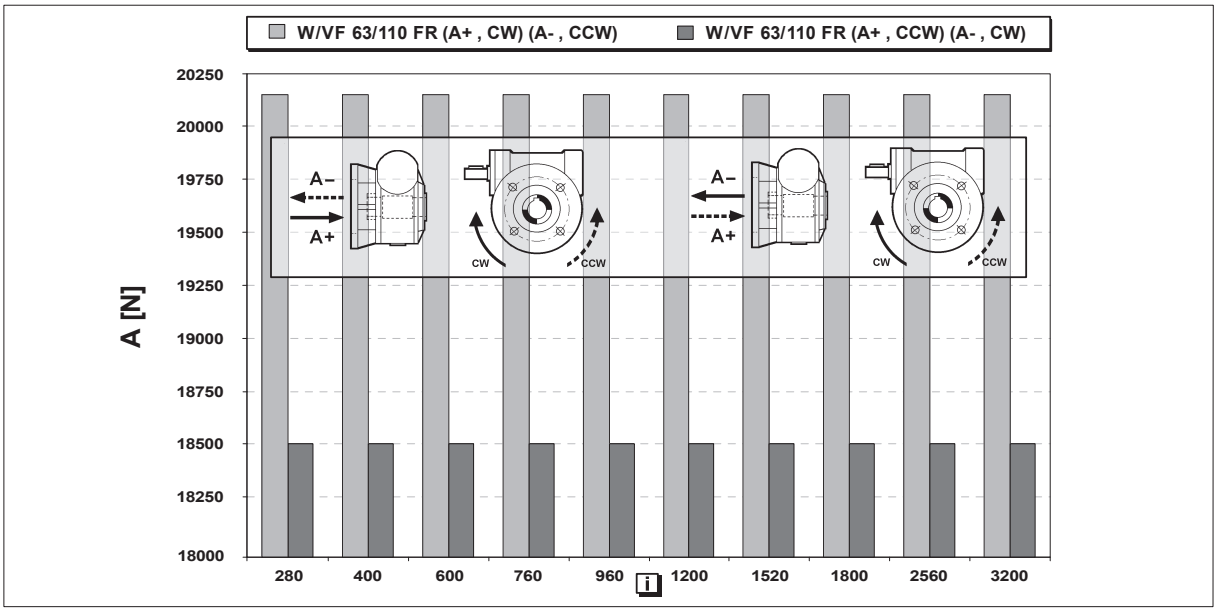
W/VF 63/110 FR (A+ , CW) (A- , CCW)
W/VF 63/110 FR (A+ , CCW) (A- , CW)
A [N]
20250
20000
19750
19500
19250
19000
18750
18500
18250
18000
280
400
600
760
960
1200
1520
1800
2560
3200
A–
A+
CW
CCW

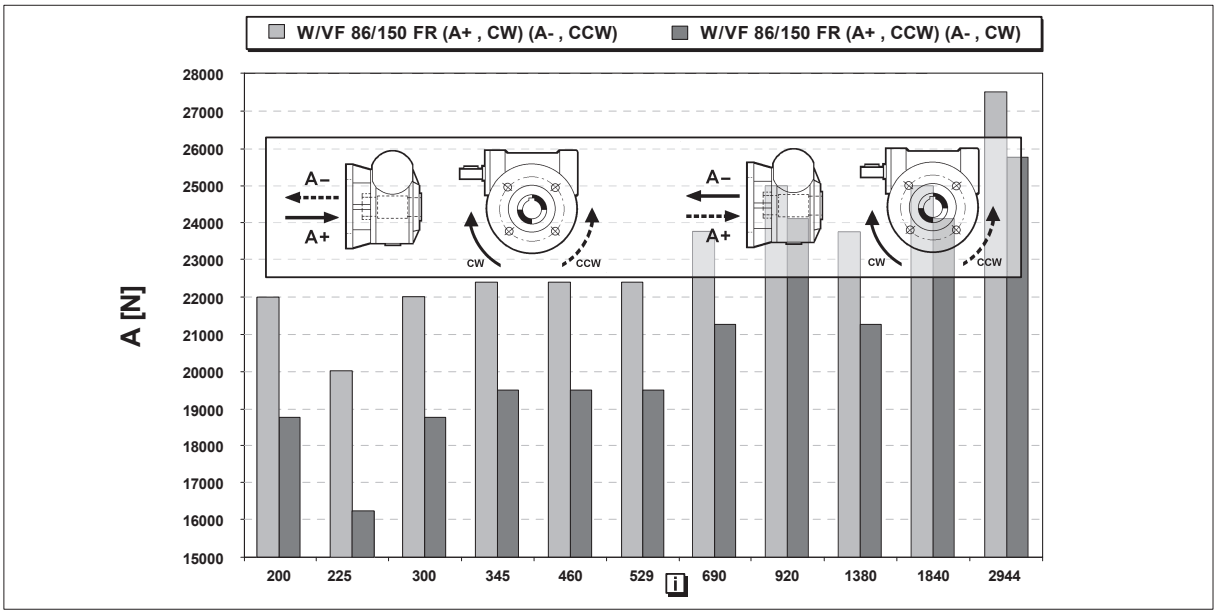
W/VF 86/150 FR (A+ , CW) (A- , CCW)
W/VF 86/150 FR (A+ , CCW) (A- , CW)
A [N]
28000
27000
26000
25000
24000
23000
22000
21000
20000
19000
18000
17000
16000
15000
200
225
300
345
460
529
690
920
1380
1840
2944
A–
A+
CW
CCW

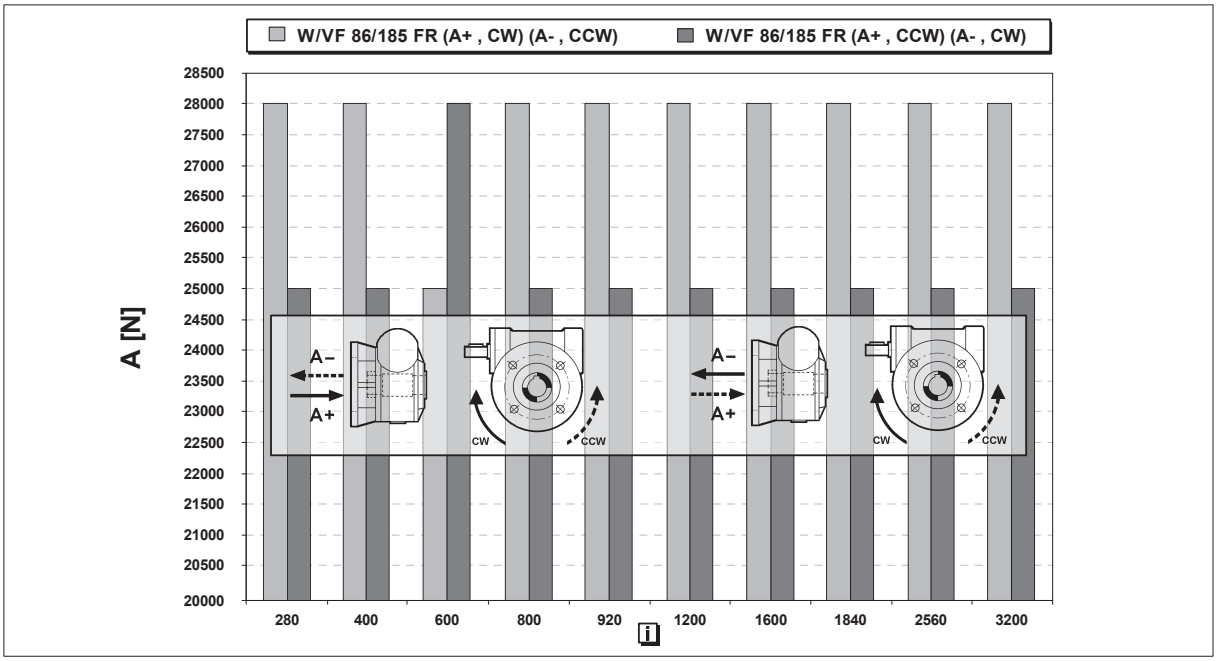
W/VF 86/185 FR (A+ , CW) (A- , CCW)
W/VF 86/185 FR (A+ , CCW) (A- , CW)
A [N]
28500
28000
27500
27000
26500
26000
25500
25000
24500
24000
23500
23000
22500
22000
21500
21000
20500
20000
280
400
600
800
920
1200
1600
1840
2560
3200
A–
A+
CW
CCW

18 EFFICIENCY

Efficiency [η] depends on the following parameters:
- helix angle of gearing
- driving speed
- running-in of gearing

In this connection, remember that the optimum value is reached after several hours of running-in and is reached later on in steady-state operating gearboxes as shown in the table below.
Therefore, in applications calling for intermittent duty (e.g. hoisting, drives, etc.), motor power must be adequately increased to compensate for the gearbox's low efficiency at start-up.
Torque values $\mathbf{M_{n2}}$ indicated in the catalogue are calculated by considering the steady-state performance of the gearboxes.
The diagram shows indicatively the time required to reach the maximum value of dynamic efficiency.

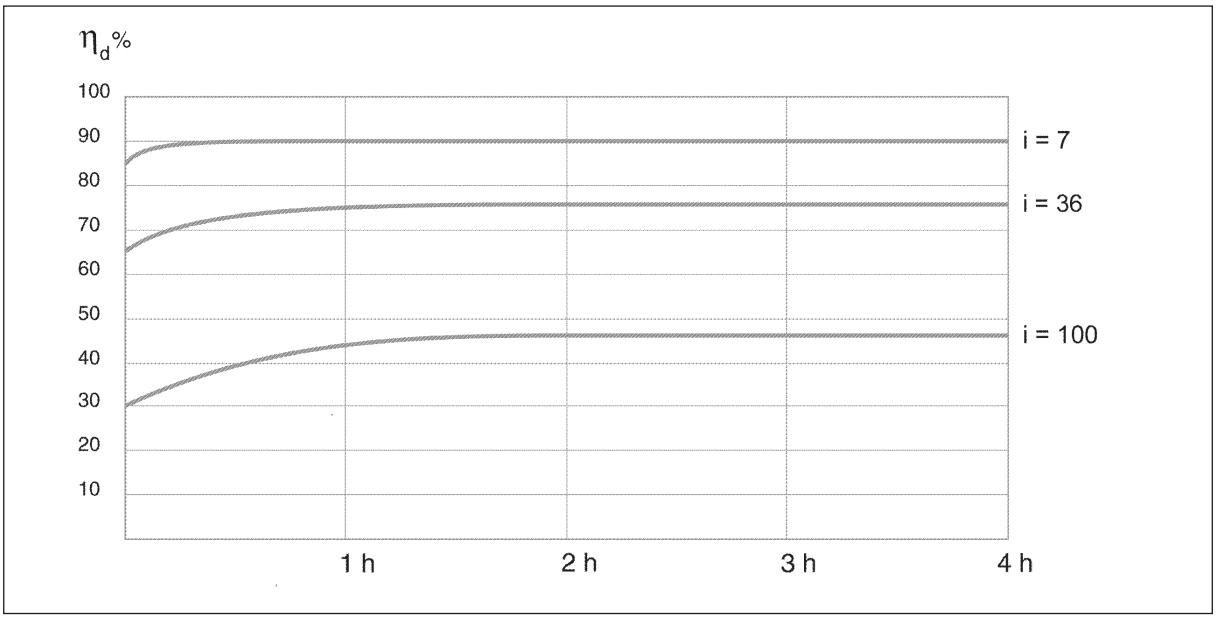

19 NON-REVERSING

Some applications may require occasionally the gearbox to be back-driven by the load through the output shaft, some others instead require the gearbox to lock and hold the load when electric power switches off.
The factor affecting reversibility of worm gears the most is the efficiency with more precisely static efficiency η_s affecting static reversibility and dynamic efficiency η_d affecting dynamic reversibility.
Generally only gear ratios i=64 and higher offer locking properties with the grater ratios being totally non reversible.

19.1 Static non-reversing

In this condition the gear units cannot be driven back from the output shaft, however slow running-back may still occur if the worm gears are subject to vibrations.
The theoretical condition for the static non-reversing to occur is:

$$\eta_s < 0.4 - 0.5 \quad (15)$$

the η_s value for each worm gear can be found in the respective rating chart.
The opposite situation, i.e. static reversibility applies, theoretically when:

$$\eta_s > 0.5 \quad (16)$$

19.2 Dynamic non-reversing

The load-holding capability is dependent on drive speed, dynamic efficiency and, if any, vibrations.
The result of non-reversibility is the locking of the output shaft is no longer driven. Partial or total non reversibility should be taken into consideration particularly when high inertia loads are driven, because of the considerable overloads that may apply to the gearbox.

$$\eta_d < 0.5 \quad (17)$$

Where η_d is the value for the dynamic efficiency of the gear unit in the actual operating conditions.
Value can be found in the speed reducer rating chart.
The opposite condition, i.e. dynamic reversing is physically possible when:

$$\eta_d > 0.5 \quad (18)$$

Table below is a guideline to the various degrees of reversibility for each drive size and gear ratio (data refer to the worm gearing only).
Values for reversibility are indicative as this may be affected by vibrations, operating temperature, lubricating conditions, gear wear, etc.

As it is virtually impossible to provide and guarantee total non reversing, we recommend the use of an external brake with sufficient capability to prevent vibrations induced starting, where these circumstances are required.

Backdriving														
		VF				W				VF				
Static reversing	Dynamic reversing	27	30	44	49	63	75	86	110	130	150	185	210	250
yes	**yes**	—	—	7	7	7	7	7	7	7	7	7	7	7
yes	**yes**	7 10	7 10	10 14	10 14	10 12 15	10 15	10 15 20 23	10 15 20 23	10 15 20 23	10 15 20 23	10 15 20	10 15 20	10 15 20
uncertain	**yes**	15 20 30	15 20 30	20 28 35	18 24 28 36	19 24 30 38	20 25 30 40	30 40 46 56	30 40 46 56	30 40 46 56 64	30 40 46 56 64	30 40 50 60	30 40 50	30 40 50 60
no	**low**	40 60	40 60	46 60 70	45 60 70	45 64 80	50 60 80	64 80 100	64 80 100	80 100	80 100	80 100	60 80 100	80 100
no	**no**	70	70	100	80 100	100	100	—	—	—	—	—	—	—

20 ANGULAR BACKLASH

The following chart shows indicative values for the angular backlash at output shaft of W gear units (input blocked).
Measurement is taken with 5 Nm torque applying to output shaft.

Angular backlash (input shaft locked)		
	Δγ **[’]**	Δγ **[rad]**
VF 30	33’ ± 10’	0.00873 ± 0.00291
VF 44	25’ ± 7’	0.00728 ± 0.00145
VFR 44	30’ ± 10’	0.00873 ± 0.00291
VF 49	22’ ± 7’	0.00728 ± 0.00145
VFR 49	30’ ± 10’	0.00873 ± 0.00291
W 63	20’ ± 4’	0.00582 ± 0.00145
WR 63	25’ ± 5’	0.00728 ± 0.00145
W 75	18’ ± 4’	0.00582 ± 0.00145
WR 75	22’ ± 5’	0.00640 ± 0.00145
W 86	15’ ± 4’	0.00436 ± 0.00145
WR 86	20’ ± 5’	0.00582 ± 0.00145
W 110	9’ ± 2’	0.00436 ± 0.00145
WR 110	18’ ± 5’	0.00524 ± 0.00145
VF 130	12’ ± 3’	0.00349 ± 0.00087
VFR 130	15’ ± 3’	0.00436 ± 0.00087
VF 150	12’ ± 3’	0.00349 ± 0.00087
VFR 150	15’ ± 3’	0.00436 ± 0.00087
VF 185	10’ ± 3’	0.00291 ± 0.00087
VFR 185	13’ ± 3’	0.00378 ± 0.00087
VF 210	Consult factory	
VFR 210		
VF 250		
VFR 250		

0.04 kW

n_2 min-1	M_2 Nm	S	i	R_{n2} N			IEC			
19.3	9	1.0	70	600	—		VF 27_70	P27	BN27A4	111
22.5	8	1.1	60	600	—		VF 27_60	P27	BN27A4	111
34	6	1.4	40	600	—		VF 27_40	P27	BN27A4	111
45	5	1.7	30	600	—		VF 27_30	P27	BN27A4	111
68	4	2.2	20	600	—		VF 27_20	P27	BN27A4	111
90	3	2.8	15	600	—		VF 27_15	P27	BN27A4	111
135	2	3.8	10	600	—		VF 27_10	P27	BN27A4	111
193	2	5.5	7	600	—		VF 27_7	P27	BN27A4	111

0.06 kW

n_2 min-1	M_2 Nm	S	i	R_{n2} N			IEC			
0.59	203	1.0	2280	5000	—		VF/W 30/63_2280	P56	BN56A4	129
0.89	155	1.4	1520	5000	—		VF/W 30/63_1520	P56	BN56A4	129
1.1	122	1.7	1200	5000	—		VF/W 30/63_1200	P56	BN56A4	129
1.5	115	1.8	900	5000	—		VF/W 30/63_900	P56	BN56A4	129
1.9	113	1.9	720	5000	—		VF/W 30/63_720	P56	BN56A4	129
2.5	85	1.1	540	3450	—		VF/VF 30/49_540	P56	BN56A4	124
2.8	50	1.0	500	5000	—		VFR 44_500	S44	BN44B4	116
3.2	73	1.3	420	3450	—		VF/VF 30/49_420	P56	BN56A4	124
4.0	54	1.0	350	5000	—		VFR 44_350	S44	BN44B4	116
4.3	53	1.8	315	3450	—		VF/VF 30/49_315	P56	BN56A4	124
4.5	59	1.0	300	2500	—		VFR 44_300	S44	BN44B4	116
5.8	50	1.2	230	2500	—		VFR 44_230	S44	BN44B4	116
7.7	42	1.5	175	2500	—		VFR 44_175	S44	BN44B4	116
9.6	36	1.4	140	2500	—		VFR 44_140	S44	BN44B4	116
13.4	29	1.8	100	2500	—		VFR 44_100	S44	BN44B4	116
19.1	22	1.8	70	2500	—		VFR 44_70	S44	BN44B4	116
19.3	14	1.1	70	1600	—		VF 30_70	P56	BN56A4	112
22.5	13	1.5	60	1600	—		VF 30_60	P56	BN56A4	112
34	10	0.9	40	600	—		VF 27_40	P27	BN27B4	111
34	10	1.9	40	1650	—		VF 30_40	P56	BN56A4	112
45	8	1.1	30	600	—		VF 27_30	P27	BN27B4	111
45	8	2.4	30	1340	—		VF 30_30	P56	BN56A4	112
68	6	1.5	20	600	—		VF 27_20	P27	BN27B4	111
68	6	2.9	20	1180	—		VF 30_20	P56	BN56A4	112
90	5	1.9	15	600	—		VF 27_15	P27	BN27B4	111
90	5	3.7	15	1080	—		VF 30_15	P56	BN56A4	112
135	4	2.6	10	595	—		VF 27_10	P27	BN27B4	111
135	3	4.7	10	950	—		VF 30_10	P56	BN56A4	112
193	2	3.6	7	533	—		VF 27_7	P27	BN27B4	111
193	2	6.4	7	840	—		VF 30_7	P56	BN56A4	112

0.09 kW

n_2 min-1	M_2 Nm	S	i	R_{n2} N			IEC			
0.31	574	1.8	2800	8000	—		VF/W 49/110_2800	P63	BN63A6	141
0.42	579	1.0	2116	7000	—		VF/W 44/86_2116	P63	BN63A6	137
0.43	505	2.1	2070	8000	—		VF/W 49/110_2070	P63	BN63A6	141
0.48	503	1.1	1840	7000	—		VF/W 44/86_1840	P63	BN63A6	137
0.53	485	2.2	1656	8000	—		VF/W 49/110_1656	P63	BN63A6	141
0.64	377	1.5	1380	7000	—		VF/W 44/86_1380	P63	BN63A6	137
0.65	369	2.8	1350	8000	—		VF/W 49/110_1350	P63	BN63A6	141

0.09 kW

n_2 min-1	M_2 Nm	S	i	R_{n2} N				IEC		
0.73	363	1.1	1200	5750	—		VF/W 44/75_1200	P63	BN63A6	133
0.81	316	3.3	1080	8000	—		VF/W 49/110_1080	P63	BN63A6	141
0.89	232	0.9	1520	5000	—		VF/W 30/63_1520	P56	BN56B4	129
0.96	323	1.2	920	5750	—		VF/W 44/75_920	P63	BN63A6	133
0.96	332	1.7	920	7000	—		VF/W 44/86_920	P63	BN63A6	137
0.98	255	0.9	900	5000	—		VF/W 30/63_900	P63	BN63A6	129
1.1	183	1.1	1200	5000	—		VF/W 30/63_1200	P56	BN56B4	129
1.2	225	1.0	720	5000	—		VF/W 30/63_720	P63	BN63A6	129
1.3	267	1.5	700	5750	—		VF/W 44/75_700	P63	BN63A6	133
1.3	253	2.2	700	7000	—		VF/W 44/86_700	P63	BN63A6	137
1.5	172	1.2	900	5000	—		VF/W 30/63_900	P56	BN56B4	129
1.7	210	1.9	525	5750	—		VF/W 44/75_525	P63	BN63A6	133
1.7	200	2.8	525	7000	—		VF/W 44/86_525	P63	BN63A6	137
1.9	170	1.2	720	5000	—		VF/W 30/63_720	P56	BN56B4	129
2.2	164	2.4	400	5750	—		VF/W 44/75_400	P63	BN63A6	133
2.2	160	3.4	400	7000	—		VF/W 44/86_400	P63	BN63A6	137
2.4	145	1.4	570	5000	—		VF/W 30/63_570	P56	BN56B4	129
2.9	111	1.2	300	5000	—		WR 63_300	P63	BN63A6	128
2.9	120	1.7	300	6200	—		WR 75_300	P63	BN63A6	132
2.9	132	2.4	300	7000	—		WR 86_300	P63	BN63A6	136
3.0	117	1.8	450	5000	—		VF/W 30/63_450	P56	BN56B4	129
3.2	110	0.9	420	3450	—		VF/VF 30/49_420	P56	BN56B4	124
3.7	101	1.4	240	5000	—		WR 63_240	P63	BN63A6	128
3.7	105	2.1	240	6200	—		WR 75_240	P63	BN63A6	132
3.7	117	2.6	240	7000	—		WR 86_240	P63	BN63A6	136
4.2	84	0.9	210	3450	—		VFR 49_210	P63	BN63A6	122
4.3	80	1.2	315	3450	—		VF/VF 30/49_315	P56	BN56B4	124
4.3	84	2.5	315	5000	—		VF/W 30/63_315	P56	BN56B4	129
4.6	88	1.7	192	5000	—		WR 63_192	P63	BN63A6	128
4.9	79	0.9	180	3450	—		VFR 49_180	P63	BN63A6	122
4.9	90	3.1	180	6200	—		WR 75_180	P63	BN63A6	132
5.2	94	4.2	168	7000	—		WR 86_168	P63	BN63A6	136
5.5	62	1.0	245	2500	—		VF/VF 30/44_245	P56	BN56B4	118
6.5	66	1.2	135	3450	—		VFR 49_135	P63	BN63A6	122
6.5	71	2.5	135	5000	—		WR 63_135	P63	BN63A6	128
7.7	63	1.0	175	2900	—		VFR 44_175	S44	BN44C4	116
7.7	65	3.1	114	5000	—		WR 63_114	P63	BN63A6	128
8.1	58	1.4	108	3450	—		VFR 49_108	P63	BN63A6	122
8.8	41	1.3	100	3300	—		VF 49_100	P63	BN63A6	120
9.6	54	0.9	140	2900	—		VFR 44_140	S44	BN44C4	116
9.8	55	3.8	90	5000	—		WR 63_90	P63	BN63A6	128
10.5	48	1.9	84	3450	—		VFR 49_84	P63	BN63A6	122
11.0	37	1.6	80	3300	—		VF 49_80	P63	BN63A6	120
12.2	45	1.8	72	3450	—		VFR 49_72	P63	BN63A6	122
12.2	48	4.0	72	5000	—		WR 63_72	P63	BN63A6	128
12.6	35	1.1	70	2300	—		VF 44_70	P63	BN63A6	114
12.6	34	1.8	70	3300	—		VF 49_70	P63	BN63A6	120
13.4	43	1.2	100	2900	—		VFR 44_100	S44	BN44C4	116
14.7	32	1.4	60	2300	—		VF 44_60	P63	BN63A6	114
14.7	34	1.7	60	3300	—		VF 49_60	P63	BN63A6	120
16.3	36	2.2	54	3450	—		VFR 49_54	P63	BN63A6	122
19.1	33	1.2	70	2900	—		VFR 44_70	S44	BN44C4	116
19.1	27	1.8	46	2300	—		VF 44_46	P63	BN63A6	114
19.6	26	2.7	45	3300	—		VF 49_45	P63	BN63A6	120
21.0	30	2.8	42	3360	—		VFR 49_42	P63	BN63A6	122
22.0	22	0.9	40	1560	—		VF 30_40	P63	BN63A6	112
22.5	19	1.0	60	1600	—		VF 30_60	P56	BN56B4	112
24.4	22	3.4	36	3300	—		VF 49_36	P63	BN63A6	120
25.1	22	2.2	35	2300	—		VF 44_35	P63	BN63A6	114
29.3	18	1.2	30	1440	—		VF 30_30	P63	BN63A6	112
31	18	2.7	28	2300	—		VF 44_28	P63	BN63A6	114
34	15	1.2	40	1410	—		VF 30_40	P56	BN56B4	112
44	14	1.5	20	1230	—		VF 30_20	P63	BN63A6	112
44	14	3.1	20	2300	—		VF 44_20	P63	BN63A6	114
45	12	1.6	30	1290	—		VF 30_30	P56	BN56B4	112
59	11	1.8	15	1170	—		VF 30_15	P63	BN63A6	112
68	9	1.9	20	1140	—		VF 30_20	P56	BN56B4	112
69	9	1.0	20	600	—		VF 27_20	P27	BN27C4	111
88	8	2.3	10	1050	—		VF 30_10	P63	BN63A6	112
90	7	2.5	15	1050	—		VF 30_15	P56	BN56B4	112
92	7	1.3	15	600	—		VF 27_15	P27	BN27C4	111

0.09 kW

n_2 min-1	M_2 Nm	S	i	R_{n2} N				IEC		
126	6	3.2	7	920	—		VF 30_7	P63	BN63A6	112
135	5	3.1	10	920	—		VF 30_10	P56	BN56B4	112
138	5	1.7	10	565	—		VF 27_10	P27	BN27C4	111
193	4	4.3	7	820	—		VF 30_7	P56	BN56B4	112
197	4	2.5	7	510	—		VF 27_7	P27	BN27C4	111

0.12 kW

n_2 min-1	M_2 Nm	S	i	R_{n2} N				IEC		
0.31	775	1.4	2800	8000	—		VF/W 49/110_2800	P63	BN63B6	141
0.47	588	1.7	2800	8000	—		VF/W 49/110_2800	P63	BN63A4	141
0.53	654	1.6	1656	8000	—		VF/W 49/110_1656	P63	BN63B6	141
0.62	518	1.0	2116	7000	—		VF/W 44/86_2116	P63	BN63A4	137
0.63	507	2.0	2070	8000	—		VF/W 49/110_2070	P63	BN63A4	141
0.71	483	1.0	1840	7000	—		VF/W 44/86_1840	P63	BN63A4	137
0.79	435	2.3	1656	8000	—		VF/W 49/110_1656	P63	BN63A4	141
0.95	386	1.3	1380	7000	—		VF/W 44/86_1380	P63	BN63A4	137
0.97	354	2.8	1350	8000	—		VF/W 49/110_1350	P63	BN63A4	141
1.2	293	3.4	1080	8000	—		VF/W 49/110_1080	P63	BN63A4	141
1.4	322	1.1	920	5750	—		VF/W 44/75_920	P63	BN63A4	133
1.4	322	1.6	920	7000	—		VF/W 44/86_920	P63	BN63A4	137
1.5	236	0.9	900	5000	—		VF/W 30/63_900	P63	BN63A4	129
1.8	233	0.9	720	5000	—		VF/W 30/63_720	P63	BN63A4	129
1.9	257	1.4	700	5750	—		VF/W 44/75_700	P63	BN63A4	133
1.9	239	2.1	700	7000	—		VF/W 44/86_700	P63	BN63A4	137
2.3	199	1.1	570	5000	—		VF/W 30/63_570	P63	BN63A4	129
2.5	202	1.8	525	5750	—		VF/W 44/75_525	P63	BN63A4	133
2.5	193	2.6	525	7000	—		VF/W 44/86_525	P63	BN63A4	137
2.9	150	0.9	300	5000	—		WR 63_300	P63	BN63B6	128
2.9	162	1.2	300	6200	—		WR 75_300	P63	BN63B6	132
2.9	178	1.7	300	7000	—		WR 86_300	P63	BN63B6	136
2.9	161	1.3	450	5000	—		VF/W 30/63_450	P63	BN63A4	129
3.3	161	2.3	400	5750	—		VF/W 44/75_400	P63	BN63A4	133
3.3	143	3.5	400	7000	—		VF/W 44/86_400	P63	BN63A4	137
3.6	136	1.0	240	5000	—		WR 63_240	P63	BN63B6	128
3.6	142	1.5	240	6200	—		WR 75_240	P63	BN63B6	132
3.6	142	1.6	240	5000	—		VF/W 30/63_240	P63	BN63B6	129
3.6	158	2.0	240	7000	—		WR 86_240	P63	BN63B6	136
4.2	110	0.9	315	3450	—		VF/VF 30/49_315	P63	BN63A4	124
4.2	116	1.8	315	5000	—		VF/W 30/63_315	P63	BN63A4	129
4.4	108	1.2	300	5000	—		WR 63_300	P63	BN63A4	128
4.4	115	1.6	300	6200	—		WR 75_300	P63	BN63A4	132
4.4	129	2.1	300	7000	—		WR 86_300	P63	BN63A4	136
4.4	134	2.8	300	5750	—		VF/W 44/75_300	P63	BN63A4	133
4.8	121	2.3	180	6200	—		WR 75_180	P63	BN63B6	132
5.2	126	3.1	168	7000	—		WR 86_168	P63	BN63B6	136
5.2	125	3.0	250	5750	—		VF/W 44/75_250	P63	BN63A4	133
5.5	94	1.0	240	3450	—		VF/VF 30/49_240	P63	BN63A4	124
5.5	97	1.4	240	5000	—		WR 63_240	P63	BN63A4	128
5.5	103	2.1	240	6200	—		WR 75_240	P63	BN63A4	132
5.5	99	2.1	240	5000	—		VF/W 30/63_240	P63	BN63A4	129
5.5	111	2.7	240	7000	—		WR 86_240	P63	BN63A4	136
5.8	109	2.9	150	6200	—		WR 75_150	P63	BN63B6	132
6.4	89	0.9	135	3300	—		VFR 49_135	P63	BN63B6	122
6.4	96	1.9	135	5000	—		WR 63_135	P63	BN63B6	128
6.8	86	1.8	192	5000	—		WR 63_192	P63	BN63A4	128
7.3	76	0.9	180	3300	—		VFR 49_180	P63	BN63A4	122
7.3	87	2.7	180	6200	—		WR 75_180	P63	BN63A4	132
8.7	55	0.9	100	3300	—		VF 49_100	P63	BN63B6	120
9.7	64	1.4	135	3450	—		VFR 49_135	P63	BN63A4	122
9.7	68	2.5	135	5000	—		WR 63_135	P63	BN63A4	128
10.9	50	1.2	80	3300	—		VF 49_80	P63	BN63B6	120
11.5	61	3.0	114	5000	—		WR 63_114	P63	BN63A4	128
12.1	55	1.5	108	3450	—		VFR 49_108	P63	BN63A4	122
13.1	41	1.2	100	3150	—		VF 49_100	P63	BN63A4	120
14.5	43	1.1	60	2300	—		VF 44_60	P63	BN63B6	114

0.12 kW

n_2 min-1	M_2 Nm	S	i	R_{n2} N			IEC		
15.3	53	3.6	57	5000	—		WR 63_57	P63	BN63B6	128
15.6	46	1.9	84	3450	—		VFR 49_84	P63	BN63A4	122
16.4	36	1.5	80	3150	—		VF 49_80	P63	BN63A4	120
18.2	42	1.8	72	3430	—		VFR 49_72	P63	BN63A4	122
18.7	34	0.9	70	3300	—		VF 44_70	P63	BN63A4	114
18.7	33	1.7	70	3150	—		VF 49_70	P63	BN63A4	120
21.8	30	1.3	60	2300	—		VF 44_60	P63	BN63A4	114
21.8	30	1.9	60	3150	—		VF 49_60	P63	BN63A4	120
24.3	34	2.2	54	3140	—		VFR 49_54	P63	BN63A4	122
28.5	25	1.5	46	2300	—		VF 44_46	P63	BN63A4	114
29.0	24	0.9	30	1360	—		VF 30_30	P63	BN63B6	112
29.1	25	2.6	45	3040	—		VF 49_45	P63	BN63A4	120
31	27	2.9	42	2920	—		VFR 49_42	P63	BN63A4	122
33	21	0.9	40	1360	—		VF 30_40	P63	BN63A4	112
36	21	3.3	36	2830	—		VF 49_36	P63	BN63A4	120
37	21	1.9	35	2300	—		VF 44_35	P63	BN63A4	114
44	17	1.2	30	1250	—		VF 30_30	P63	BN63A4	112
47	17	2.2	28	2300	—		VF 44_28	P63	BN63A4	114
58	15	1.4	15	1130	—		VF 30_15	P63	BN63B6	112
62	14	2.7	14	2150	—		VF 44_14	P63	BN63B6	114
66	13	1.4	20	1110	—		VF 30_20	P63	BN63A4	112
66	13	2.9	20	2100	—		VF 44_20	P63	BN63A4	114
87	10	1.8	15	1020	—		VF 30_15	P63	BN63A4	112
94	10	2.9	14	1870	—		VF 44_14	P63	BN63A4	114
124	8	2.4	7	900	—		VF 30_7	P63	BN63B6	112
131	7	2.3	10	900	—		VF 30_10	P63	BN63A4	112
138	6	1.1	20	560	—		VF 27_20	P27	BN27C2	111
138	7	2.2	20	840	—		VF 30_20	P56	BN56B2	112
183	5	1.4	15	520	—		VF 27_15	P27	BN27C2	111
187	5	3.1	7	810	—		VF 30_7	P63	BN63A4	112
275	4	2.0	10	460	—		VF 27_10	P27	BN27C2	111
275	4	3.4	10	740	—		VF 30_10	P56	BN56B2	112
393	3	2.8	7	410	—		VF 27_7	P27	BN27C2	111
393	3	4.7	7	660	—		VF 30_7	P56	BN56B2	112

0.18 kW

n_2 min-1	M_2 Nm	S	i	R_{n2} N			IEC		
0.28	978	1.9	3200	13800	—		W/VF 63/130_3200	P71	BN71A6	147
0.28	1345	3.3	3200	19500	—		W/VF 86/185_3200	P71	BN71A6	159
0.31	1406	1.9	2944	16000	—		W/VF 86/150_2944	P71	BN71A6	153
0.35	1027	1.8	2560	13800	—		W/VF 63/130_2560	P71	BN71A6	147
0.35	1320	3.3	2560	19500	—		W/VF 86/185_2560	P71	BN71A6	159
0.47	875	1.1	2800	8000	—		VF/W 49/110_2800	P63	BN63B4	141
0.49	1265	2.1	1840	16000	—		W/VF 86/150_1840	P71	BN71A6	153
0.50	894	2.1	1800	13800	—		W /VF 63/130_1800	P71	BN71A6	147
0.54	949	1.1	1656	8000	—		VF/W 49/110_1656	P71	BN71A6	141
0.59	871	2.1	1520	13800	—		W/VF 63/130_1520	P71	BN71A6	147
0.64	755	1.3	2070	8000	—		VF/W 49/110_2070	P63	BN63B4	141
0.65	1054	2.6	1380	16000	—		W/VF 86/150_1380	P71	BN71A6	153
0.75	733	2.5	1200	13800	—		W/VF 63/130_1200	P71	BN71A6	147
0.80	647	1.5	1656	8000	—		VF/W 49/110_1656	P63	BN63B4	141
0.94	642	2.9	960	13800	—		W/VF 63/130_960	P71	BN71A6	147
0.98	527	1.9	1350	8000	—		VF/W 49/110_1350	P63	BN63B4	141
0.98	756	3.6	920	16000	—		W/VF 86/150_920	P71	BN71A6	153
1.2	537	3.4	760	13800	—		W/VF 63/130_760	P71	BN71A6	147
1.2	436	2.3	1080	8000	—		VF/W 49/110_1080	P63	BN63B4	141
1.4	479	1.0	920	7000	—		VF/W 44/86_920	P63	BN63B4	137
1.7	391	1.4	525	7000	—		VF/W 44/86_525	P71	BN71A6	137
1.8	375	2.7	720	8000	—		VF/W 49/110_720	P63	BN63B4	141
1.9	356	1.4	700	7000	—		VF/W 44/86_700	P63	BN63B4	137
2.3	321	1.2	400	5750	—		VF/W 44/75_400	P71	BN71A6	133
2.3	313	1.8	400	7000	—		VF/W 44/86_400	P71	BN71A6	137
2.3	344	3.1	400	8000	—		VF/W 49/110_400	P71	BN71A6	141
2.4	288	3.5	540	8000	—		VF/W 49/110_540	P63	BN63B4	141

0.18 kW

n_2 min-1	M_2 Nm	S	i	R_{n2} N					IEC		
2.5	301	1.2	525	5750	—				VF/W 44/75_525	P63	BN63B4	133
2.5	287	1.7	525	7000	—				VF/W 44/86_525	P63	BN63B4	137
3.0	258	1.2	300	7000	—				WR 86_300	P71	BN71A6	136
3.0	264	1.5	300	5750	—				VF/W 44/75_300	P71	BN71A6	133
3.0	275	2.1	300	8000	—				WR 110_300	P71	BN71A6	140
3.0	241	2.3	300	7000	—				VF/W 44/86_300	P71	BN71A6	137
3.0	269	3.9	300	8000	—				VF/W 49/110_300	P71	BN71A6	141
3.3	240	1.5	400	5750	—				VF/W 44/75_400	P63	BN63B4	133
3.3	214	2.3	400	7000	—				VF/W 44/86_400	P63	BN63B4	137
3.8	206	1.1	240	6200	—				WR 75_240	P71	BN71A6	132
3.8	229	1.4	240	7000	—				WR 86_240	P71	BN71A6	136
3.8	243	2.4	240	8000	—				WR 110_240	P71	BN71A6	140
3.9	233	2.4	230	7000	—				VF/W 44/86_230	P71	BN71A6	137
4.2	172	1.2	315	5000	—				VF/W 30/63_315	P63	BN63B4	129
4.4	172	1.0	300	6200	—				WR 75_300	P63	BN63B4	132
4.4	191	1.4	300	7000	—				WR 86_300	P63	BN63B4	136
4.4	199	1.9	300	5750	—				VF/W 44/75_300	P63	BN63B4	133
4.4	176	2.8	300	7000	—				VF/W 44/86_300	P63	BN63B4	137
4.7	202	1.9	192	7000	—				WR 86_192	P71	BN71A6	136
5.0	175	1.6	180	6200	—				WR 75_180	P71	BN71A6	132
5.3	186	2.0	250	5750	—				VF/W 44/75_250	P63	BN63B4	133
5.4	183	2.1	168	7000	—				WR 86_168	P71	BN71A6	136
5.5	144	0.9	240	5000	—				WR 63_240	P63	BN63B4	128
5.5	153	1.4	240	6200	—				WR 75_240	P63	BN63B4	132
5.5	147	1.4	240	5000	—				VF/W 30/63_240	P63	BN63B4	129
5.5	166	1.8	240	7000	—				WR 86_240	P63	BN63B4	136
5.7	162	3.1	230	7000	—				VF/W 44/86_230	P63	BN63B4	137
6.0	158	2.0	150	6200	—				WR 75_150	P71	BN71A6	132
6.5	161	2.7	138	7000	—				WR 86_138	P71	BN71A6	136
6.9	128	1.2	192	5000	—				WR 63_192	P63	BN63B4	128
6.9	145	2.3	192	7000	—				WR 86_192	P63	BN63B4	136
7.3	129	1.8	180	6200	—				WR 75_180	P63	BN63B4	132
7.5	138	2.4	120	6200	—				WR 75_120	P71	BN71A6	132
7.9	131	2.7	168	7000	—				WR 86_168	P63	BN63B4	136
7.9	126	1.6	114	5000	—				WR 63_114	P71	BN71A6	128
8.8	113	2.3	150	6200	—				WR 75_150	P63	BN63B4	132
9.0	88	1.4	100	5000	W 63_100	S1	M1SC6	126	W 63_100	P71	BN71A6	127
9.0	96	1.7	100	6200	W 75_100	S1	M1SC6	130	W 75_100	P71	BN71A6	131
9.0	105	2.4	100	7000	W 86_100	S1	M1SC6	134	W 86_100	P71	BN71A6	135
9.8	102	1.7	135	5000	—				WR 63_135	P63	BN63B4	128
10.0	107	1.9	90	5000	—				WR 63_90	P71	BN71A6	128
11.0	98	3.1	120	6200	—				WR 75_120	P63	BN63B4	132
11.3	79	1.6	80	5000	W 63_80	S1	M1SC6	126	W 63_80	P71	BN71A6	127
11.3	83	2.4	80	6200	W 75_80	S1	M1SC6	130	W 75_80	P71	BN71A6	131
11.3	90	3.1	80	7000	W 86_80	S1	M1SC6	134	W 86_80	P71	BN71A6	135
11.6	91	2.0	114	5000	—				WR 63_114	P63	BN63B4	128
12.0	100	3.3	75	6200	—				WR 75_75	P71	BN71A6	132
12.2	82	1.0	108	3450	—				VFR 49_108	P63	BN63B4	122
14.7	75	2.5	90	5000	—				WR 63_90	P63	BN63B4	128
15.0	61	1.1	60	3000	—				VF 49_60	P71	BN71A6	120
15.0	60	1.1	180	3300	—				VFR 49_180	P63	BN63A2	122
15.7	68	1.3	84	3420	—				VFR 49_84	P63	BN63B4	122
16.5	54	1.0	80	3150	—				VF 49_80	P63	BN63B4	120
18.3	63	1.2	72	3270	—				VFR 49_72	P63	BN63B4	122
18.3	66	2.8	72	5000	—				WR 63_72	P63	BN63B4	128
18.9	49	1.1	70	3150	—				VF 49_70	P63	BN63B4	120
20.0	50	1.4	135	3280	—				VFR 49_135	P63	BN63A2	122
20.0	54	2.9	45	5000	W63_45	S1	M1SC6	126	W 63_45	P71	BN71A6	127
22.0	45	0.9	60	2300	—			114	VF 44_60	P63	BN63B4	114
22.0	45	1.3	60	3150	—				VF 49_60	P63	BN63B4	120
23.2	54	3.3	57	4910	—				WR 63_57	P63	BN63B4	128
24.4	50	1.5	54	3010	—				VFR 49_54	P63	BN63B4	122
28.7	38	1.0	46	2500	—				VF 44_46	P63	BN63B4	114
29.3	37	1.8	45	2300	—				VF 49_45	P63	BN63B4	120
31	40	1.9	42	2810	—				VFR 49_42	P63	BN63B4	122
32	36	1.4	28	2290	—				VF 44_28	P71	BN71A6	114
37	31	2.2	36	2760	—				VF 49_36	P63	BN63B4	120
38	31	1.3	35	2430	—				VF 44_35	P63	BN63B4	114
47	26	1.5	28	2270	—				VF 44_28	P63	BN63B4	114

Bonfiglioli Riduttori

0.18 kW

n_2 min-1	M_2 Nm	S	i	R_{n2} N				IEC		
47	26	2.9	28	2560	—		VF 49_28	P63	BN63B4	120
55	23	2.7	24	2430	—		VF 49_24	P63	BN63B4	120
66	19	0.9	20	1040	—		VF 30_20	P63	BN63B4	112
66	20	1.9	20	2040	—		VF 44_20	P63	BN63B4	114
73	18	3.2	18	2230	—		VF 49_18	P63	BN63B4	120
77	16	1.8	35	1970	—		VF 44_35	P63	BN63A2	114
88	15	1.2	15	960	—		VF 30_15	P63	BN63B4	112
94	15	2.0	14	1830	—		VF 44_14	P63	BN63B4	114
132	11	1.5	10	860	—		VF 30_10	P63	BN63B4	112
132	11	2.7	10	1640	—		VF 44_10	P63	BN63B4	114
189	8	2.1	7	770	—		VF 30_7	P63	BN63B4	112
193	7	2.9	14	1470	—		VF 44_14	P63	BN63A2	114
270	5	2.2	10	710	—		VF 30_10	P63	BN63A2	112
386	4	3.1	7	640	—		VF 30_7	P63	BN63A2	112

0.25 kW

n_2 min-1	M_2 Nm	S	i	R_{n2} N				IEC		
0.28	1358	1.4	3200	13800	—		W/VF 63/130_3200	P71	BN71B6	147
0.28	1868	2.4	3200	19500	—		W/VF 86/185_3200	P71	BN71B6	159
0.31	1952	1.4	2944	16000	—		W/VF 86/150_2944	P71	BN71B6	153
0.43	945	1.9	3200	13800	—		W/VF 63/130_3200	P71	BN71A4	147
0.43	1334	3.1	3200	19500	—		W/VF 86/185_3200	P71	BN71A4	159
0.47	1380	1.9	2944	16000	—		W/VF 86/150_2944	P71	BN71A4	153
0.49	1562	2.8	1840	19500	—		W/VF 86/185_1840	P71	BN71B6	159
0.54	1022	1.8	2560	13800	—		W/VF 63/130_2560	P71	BN71A4	147
0.54	1289	3.3	2560	19500	—		W/VF 86/185_2560	P71	BN71A4	159
0.65	1464	1.8	1380	16000	—		W/VF 86/150_1380	P71	BN71B6	153
0.66	1006	1.0	2070	8000	—		VF/W 49/110_2070	P71	BN71A4	141
0.75	1214	2.1	1840	16000	—		W/VF 86/150_1840	P71	BN71A4	153
0.75	1019	1.8	1200	13800	—		W/VF 63/130_1200	P71	BN71B6	147
0.76	875	2.1	1800	13800	—		W/VF 63/130_1800	P71	BN71A4	147
0.83	863	1.2	1656	8000	—		VF/W 49/110_1656	P71	BN71A4	141
0.90	845	2.1	1520	13800	—		W/VF 63/130_1520	P71	BN71A4	147
0.98	1049	2.6	920	16000	—		W/VF 86/150_920	P71	BN71B6	153
1.0	1006	2.6	1380	16000	—		W/VF 86/150_1380	P71	BN71A4	153
1.0	703	1.4	1350	8000	—		VF/W 49/110_1350	P71	BN71A4	141
1.1	708	2.5	1200	13800	—		W/VF 63/130_1200	P71	BN71A4	147
1.2	746	2.5	760	13800	—		W/VF 63/130_760	P71	BN71B6	147
1.3	581	1.7	1080	8000	—		VF/W 49/110_1080	P71	BN71A4	141
1.3	860	3.1	690	16000	—		W/VF 86/150_690	P71	BN71B6	153
1.4	617	2.9	960	13800	—		W/VF 63/130_960	P71	BN71A4	147
1.7	544	1.9	540	8000	—		VF/W 49/110_540	P71	BN71B6	141
1.7	543	1.0	525	7000	—		VF/W 44/86_525	P71	BN71B6	137
1.8	515	3.5	760	13800	—		W/VF 63/130_760	P71	BN71A4	147
1.9	500	2.0	720	8000	—		VF/W 49/110_720	P71	BN71A4	141
2.0	474	1.1	700	7000	—		VF/W 44/86_700	P71	BN71A4	137
2.5	384	2.6	540	8000	—		VF/W 49/110_540	P71	BN71A4	141
2.6	383	1.3	525	7000	—		VF/W 44/86_525	P71	BN71A4	137
3.0	366	1.1	300	5750	—		VF/W 44/75_300	P71	BN71B6	133
3.0	382	1.5	300	8000	—		WR 110_300	P71	BN71B6	140
3.0	374	2.8	300	8000	—		VF/W 49/110_300	P71	BN71B6	141
3.4	319	1.2	400	5750	—		VF/W 44/75_400	P71	BN71A4	133
3.4	285	1.8	400	7000	—		VF/W 44/86_400	P71	BN71A4	137
3.4	313	3.2	400	8000	—		VF/W 49/110_400	P71	BN71A4	141
3.8	318	1.0	240	7000	—		WR 86_240	P71	BN71B6	136
3.8	337	1.7	240	8000	—		WR 110_240	P71	BN71B6	140
3.9	323	1.7	230	7000	—		VF/W 44/86_230	P71	BN71B6	137
3.9	311	3.4	230	8000	—		VF/W 49/110_230	P71	BN71B6	141
4.6	255	1.1	300	7000	—		WR 86_300	P71	BN71A4	136
4.6	266	1.4	300	5750	—		VF/W 44/75_300	P71	BN71A4	133
4.6	266	2.1	300	8000	—		WR 110_300	P71	BN71A4	140
4.6	234	2.1	300	7000	—		VF/W 44/86_300	P71	BN71A4	137
4.7	280	1.4	192	7000	—		WR 86_192	P71	BN71B6	136

0.25 kW

n_2 min-1	M_2 Nm	S	i	R_{n2} N						IEC		
5.5	247	1.5	250	5750		—			VF/W 44/75_250	P71	BN71A4	133
5.7	204	1.1	240	6200		—			WR 75_240	P71	BN71A4	132
5.7	221	1.4	240	7000		—			WR 86_240	P71	BN71A4	136
5.7	233	2.4	240	8000		—			WR 110_240	P71	BN71A4	140
6.0	216	2.3	230	7000		—			VF/W 44/86_230	P71	BN71A4	137
6.0	219	1.4	150	6200		—			WR 75_150	P71	BN71B6	132
6.7	193	0.9	135	5000		—			WR 63_135	P71	BN71B6	128
7.2	193	1.7	192	7000		—			WR 86_192	P71	BN71A4	136
7.2	200	3.1	192	8000		—			WR 110_192	P71	BN71A4	140
7.6	172	1.4	180	6200		—			WR 75_180	P71	BN71A4	132
7.9	175	1.1	114	5000		—			WR 63_114	P71	BN71B6	128
8.2	175	2.0	168	7000		—			WR 86_168	P71	BN71A4	136
9.0	122	1.0	100	5000	W 63_100	S1	M1SD6	126		—		
9.0	133	1.2	100	6200	W 75_100	S1	M1SD6	130	W 75_100	P71	BN71B6	131
9.0	146	1.7	100	7000	W 86_100	S1	M1SD6	134	W 86_100	P71	BN71B6	135
9.2	151	1.7	150	6200		—			WR 75_150	P71	BN71A4	132
10.0	151	2.7	138	7000		—			WR 86_138	P71	BN71A4	136
10.0	160	2.3	90	6200		—			WR 75_90	P71	BN71B6	132
10.2	136	1.3	135	5000		—			WR 63_135	P71	BN71A4	128
11.3	110	1.1	80	5000	W 63_80	S1	M1SD6	126		—		
11.3	115	1.7	80	6200	W 75_80	S1	M1SD6	130	W 75_80	P71	BN71B6	131
11.3	125	2.2	80	7000	W 86_80	S1	M1SD6	134	W 86_80	P71	BN71B6	135
11.5	131	2.3	120	6200		—			WR 75_120	P71	BN71A4	132
11.5	138	2.8	120	7000		—			WR 86_120	P71	BN71A4	136
12.1	121	1.5	114	5000		—			WR 63_114	P71	BN71A4	128
13.8	89	1.3	100	5000		—			W 63_100	P71	BN71A4	127
13.8	96	1.6	100	6200		—			W 75_100	P71	BN71A4	131
13.8	102	2.2	100	7000		—			W 86_100	P71	BN71A4	135
15.3	100	1.9	90	5000		—			WR 63_90	P71	BN71A4	128
15.3	108	3.0	90	6200		—			WR 75_90	P71	BN71A4	132
17.2	78	1.5	80	5000		—			W 63_80	P71	BN71A4	127
17.2	82	2.2	80	6200		—			W 75_80	P71	BN71A4	131
17.2	89	2.9	80	7000		—			W 86_80	P71	BN71A4	135
18.3	95	3.1	75	6200		—			WR 75_75	P71	BN71A4	132
19.1	88	2.1	72	5000		—			WR 63_72	P71	BN71A4	128
20.0	70	1.0	45	3150		—				—		
21.5	68	1.8	64	5000		—			W 63_64	P71	BN71A4	127
22.0	63	0.9	60	3150		—				—		
22.9	68	3.0	60	6200		—			W 75_60	P71	BN71A4	131
24.1	72	2.5	57	4780		—			WR 63_57	P71	BN71A4	128
29.3	51	1.3	45	2850		—				—		
31	52	2.8	45	4550		—			W 63_45	P71	BN71A4	127
31	59	3.0	45	4460		—			WR 63_45	P71	BN71A4	128
32	50	1.0	28	2300		—			VF 44_28	P71	BN71B6	114
36	46	3.4	38	4320		—			W 63_38	P71	BN71A4	127
37	44	1.6	36	2670		—			VF 49_36	P71	BN71A4	120
38	43	0.9	35	2300		—			VF 44_35	P71	BN71A4	114
38	49	3.3	36	4160		—			WR 63_36	P71	BN71A4	128
45	39	1.1	20	2190		—			VF 44_20	P71	BN71B6	114
47	36	1.1	28	2190		—			VF 44_28	P71	BN71A4	114
47	36	2.1	28	2480		—			VF 49_28	P71	BN71A4	120
55	33	1.9	24	2360		—			VF 49_24	P71	BN71A4	120
64	29	1.3	14	1980		—			VF 44_14	P71	BN71B6	114
64	29	2.5	14	2260		—			VF 49_14	P71	BN71B6	120
66	28	1.4	20	1970		—			VF 44_20	P71	BN71A4	114
73	25	2.3	18	2170		—			VF 49_18	P71	BN71A4	120
77	23	1.3	35	1930		—			VF 44_35	P63	BN63B2	114
90	22	1.8	10	1780		—			VF 44_10	P71	BN71B6	114
90	22	2.9	10	2040		—			VF 49_10	P71	BN71B6	120
94	21	1.4	14	1770		—			VF 44_14	P71	BN71A4	114
94	21	3.2	14	2010		—			VF 49_14	P71	BN71A4	120
113	17	2.8	24	1930		—			VF 49_24	P63	BN63B2	120
129	16	2.5	7	1590		—			VF 44_7	P71	BN71B6	114
132	15	1.9	10	1590		—			VF 44_10	P71	BN71A4	114
135	14	1.0	20	840		—			VF 30_20	P63	BN63B2	112
180	11	1.3	15	780		—			VF 30_15	P63	BN63B2	112
189	11	2.7	7	1420		—			VF 44_7	P71	BN71A4	114
270	8	1.6	10	690		—			VF 30_10	P63	BN63B2	112

Bonfiglioli Riduttori

0.25 kW

n_2 min-1	M_2 Nm	S	i	R_{n2} N				IEC		
270	8	2.9	10	1300	—		VF 44_10	P63	BN63B2	114
386	5	2.2	7	620	—		VF 30_7	P63	BN63B2	112

0.37 kW

n_2 min-1	M_2 Nm	S	i	R_{n2} N				IEC		
0.28	2734	1.6	3200	19500	—		W/VF 86/185_3200	P80	BN80A6	159
0.31	2858	0.9	2944	16000	—		W/VF 86/150_2944	P80	BN80A6	153
0.36	2684	1.6	2560	19500	—		W/VF 86/185_2560	P80	BN80A6	159
0.43	1403	1.3	3200	13800	—		W/VF 63/130_3200	P71	BN71B4	147
0.43	1981	2.1	3200	19500	—		W/VF 86/185_3200	P71	BN71B4	159
0.47	2050	1.3	2944	16000	—		W/VF 86/150_2944	P71	BN71B4	153
0.54	1519	1.2	2560	13800	—		W/VF 63/130_2560	P71	BN71B4	147
0.54	1915	2.2	2560	19500	—		W/VF 86/185_2560	P71	BN71B4	159
0.60	1771	1.0	1520	13800	—		W/VF 63/130_1520	P80	BN80A6	147
0.66	2143	1.3	1380	16000	—		W/VF 86/150_1380	P80	BN80A6	153
0.74	1803	1.4	1840	16000	—		W/VF 86/150_1840	P71	BN71B4	153
0.74	1614	2.6	1840	19500	—		W/VF 86/185_1840	P71	BN71B4	159
0.76	1300	1.4	1800	13800	—		W/VF 63/130_1800	P71	BN71B4	147
0.86	1444	2.9	1600	19500	—		W/VF 86/185_1600	P71	BN71B4	159
0.90	1255	1.4	1520	13800	—		W/VF 63/130_1520	P71	BN71B4	147
0.99	1357	3.2	920	19500	—		W/VF 86/185_920	P80	BN80A6	159
0.99	1495	1.7	1380	16000	—		W/VF 86/150_1380	P71	BN71B4	153
1.0	1045	1.0	1350	8000	—		VF/W 49/110_1350	P71	BN71B4	141
1.1	1052	1.7	1200	13800	—		W/VF 63/130_1200	P71	BN71B4	147
1.3	864	1.2	1080	8000	—		VF/W 49/110_1080	P71	BN71B4	141
1.3	1259	2.1	690	16000	—		W/VF 86/150_690	P80	BN80A6	153
1.4	916	2.0	960	13800	—		W/VF 63/130_960	P71	BN71B4	147
1.5	1068	2.4	920	16000	—		W/VF 86/150_920	P71	BN71B4	153
1.7	797	1.3	540	8000	—		VF/W 49/110_540	P80	BN80A6	141
1.7	1068	2.5	529	16000	—		W/VF 86/150_529	P80	BN80A6	153
1.8	764	2.4	760	13800	—		W/VF 63/130_760	P71	BN71B4	147
1.9	743	1.3	720	8000	—		VF/W 49/110_720	P71	BN71B4	141
2.0	890	2.9	690	16000	—		W/VF 86/150_690	P71	BN71B4	153
2.3	619	2.9	600	13800	—		W/VF 63/130_600	P71	BN71B4	147
2.5	571	1.8	540	8000	—		VF/W 49/110_540	P71	BN71B4	141
2.6	750	3.5	529	16000	—		W/VF 86/150_529	P71	BN71B4	153
3.0	559	1.0	300	8000	—		WR 110_300	P80	BN80A6	140
3.0	571	1.8	300	13800	—		VFR 130_300	P80	BN80A6	144
3.0	547	1.9	300	8000	—		VF/W 49/110_300	P80	BN80A6	141
3.4	423	1.2	400	7000	—		VF/W 44/86_400	P71	BN71B4	137
3.4	464	2.2	400	8000	—		VF/W 49/110_400	P71	BN71B4	141
3.8	494	1.2	240	8000	—		WR 110_240	P80	BN80A6	140
3.8	503	2.4	240	13800	—		VFR 130_240	P80	BN80A6	144
4.0	455	2.3	230	8000	—		VF/W 49/110_230	P80	BN80A6	141
4.6	395	1.4	300	8000	—		WR 110_300	P71	BN71B4	140
4.6	348	1.4	300	7000	—		VF/W 44/86_300	P71	BN71B4	137
4.6	371	2.7	300	8000	—		VF/W 49/110_300	P71	BN71B4	141
4.7	410	1.0	192	7000	—		WR 86_192	P80	BN80A6	136
4.7	425	1.6	192	8000	—		WR 110_192	P80	BN80A6	140
4.7	432	3.0	192	13800	—		VFR 130_192	P80	BN80A6	144
5.4	372	1.0	168	7000	—		WR 86_168	P80	BN80A6	136
5.4	391	2.0	168	8000	—		WR 110_168	P80	BN80A6	140
5.4	391	3.4	168	13800	—		VFR 130_168	P80	BN80A6	144
5.7	328	0.9	240	7000	—		WR 86_240	P71	BN71B4	136
5.7	347	1.6	240	8000	—		WR 110_240	P71	BN71B4	140
6.0	320	1.6	230	7000	—		VF/W 44/86_230	P71	BN71B4	137
6.0	308	3.2	230	8000	—		VF/W 49/110_230	P71	BN71B4	141
6.1	320	1.0	150	6200	—		WR 75_150	P80	BN80A6	132
6.6	327	1.3	138	7000	—		WR 86_138	P80	BN80A6	136
6.6	338	2.4	138	8000	—		WR 110_138	P80	BN80A6	140

0.37 kW

n_2 min-1	M_2 Nm	S	i	R_{n2} N						IEC		
7.1	287	1.1	192	7000		—			**WR 86_192**	**P71**	**BN71B4**	136
7.1	297	2.1	192	8000		—			**WR 110_192**	**P71**	**BN71B4**	140
7.6	294	1.5	120	7000		—			**WR 86_120**	**P80**	**BN80A6**	136
7.6	303	2.9	120	8000		—			**WR 110_120**	**P80**	**BN80A6**	140
7.6	255	0.9	180	6200		—			**WR 75_180**	**P71**	**BN71B4**	132
8.2	260	1.4	168	7000		—			**WR 86_168**	**P71**	**BN71B4**	136
8.2	273	2.6	168	8000		—			**WR 110_168**	**P71**	**BN71B4**	140
9.1	214	1.2	100	7000	**W 86_100**	**S1**	**M1LA6**	134	**W 86_100**	**P80**	**BN80A6**	135
9.1	224	1.2	150	6200		—			**WR 75_150**	**P71**	**BN71B4**	132
9.9	224	1.8	138	7000		—			**WR 86_138**	**P71**	**BN71B4**	136
9.9	235	3.0	138	8000		—			**WR 110_138**	**P71**	**BN71B4**	140
10.1	234	1.6	90	6200		—			**WR 75_90**	**P80**	**BN80A6**	132
11.4	168	1.2	80	6200	**W 75_80**	**S1**	**M1LA6**	130	**W 75_80**	**P80**	**BN80A6**	131
11.4	183	1.5	80	7000	**W 86_80**	**S1**	**M1LA6**	134	**W 86_80**	**P80**	**BN80A6**	135
11.4	195	1.6	120	6200		—			**WR 75_120**	**P71**	**BN71B4**	132
11.4	204	1.9	120	7000		—			**WR 86_120**	**P71**	**BN71B4**	136
12.0	179	1.0	114	5000		—			**WR 63_114**	**P71**	**BN71B4**	128
12.1	204	1.6	75	6200		—			**WR 75_75**	**P80**	**BN80A6**	132
13.2	196	2.0	69	7000		—			**WR 86_69**	**P80**	**BN80A6**	136
13.7	142	1.1	100	6200	**W 75_100**	**S1**	**M1SD4**	130	**W 75_100**	**P71**	**BN71B4**	131
13.7	152	1.5	100	7000	**W 86_100**	**S1**	**M1SD4**	134	**W 86_100**	**P71**	**BN71B4**	135
14.2	139	1.0	64	5000	**W 63_64**	**S1**	**M1LA6**	126	**W 63_64**	**P80**	**BN80A6**	127
15.2	140	1.5	60	6200	**W 75_60**	**S1**	**M1LA6**	130	**W 75_60**	**P80**	**BN80A6**	131
15.2	149	1.3	90	5000		—			**WR 63_90**	**P71**	**BN71B4**	128
15.2	160	2.0	90	6200		—			**WR 75_90**	**P71**	**BN71B4**	132
15.2	156	2.8	90	7000		—			**WR 86_90**	**P71**	**BN71B4**	136
16.3	144	2.3	56	7000	**W 86_56**	**S1**	**M1LA6**	134	**W 86_56**	**P80**	**BN80A6**	135
17.1	116	1.0	80	5000	**W 63_80**	**S1**	**M1SD4**	126	**W 63_80**	**P71**	**BN71B4**	127
17.1	122	1.5	80	6200	**W 75_80**	**S1**	**M1SD4**	130	**W 75_80**	**P71**	**BN71B4**	131
17.1	132	1.9	80	7000	**W 86_80**	**S1**	**M1SD4**	134	**W 86_80**	**P71**	**BN71B4**	135
18.3	141	2.1	75	6200		—			**WR 75_75**	**P71**	**BN71B4**	132
19.0	130	1.4	72	4830		—			**WR 63_72**	**P71**	**BN71B4**	128
19.9	133	2.8	69	7000		—			**WR 86_69**	**P71**	**BN71B4**	136
20.2	136	2.6	45	6200		—			**WR 75_45**	**P80**	**BN80A6**	132
21.4	101	1.2	64	4870	**W 63_64**	**S1**	**M1SD4**	126	**W 63_64**	**P71**	**BN71B4**	127
21.4	112	2.5	64	7000	**W 86_64**	**S1**	**M1SD4**	134	**W 86_64**	**P71**	**BN71B4**	135
22.8	101	2.0	60	6200	**W 75_60**	**S1**	**M1SD4**	130	**W 75_60**	**P71**	**BN71B4**	131
22.8	119	2.5	60	6200		—			**WR 75_60**	**P71**	**BN71B4**	132
22.8	119	3.2	60	7000		—			**WR 86_60**	**P71**	**BN71B4**	136
24.0	107	1.7	57	4540		—			**WR 63_57**	**P71**	**BN71B4**	128
24.5	101	3.0	56	7000	**W 86_56**	**S1**	**M1SD4**	134	**W 86_56**	**P71**	**BN71B4**	135
27.4	88	2.5	50	6200	**W 75_50**	**S1**	**M1SD4**	130	**W 75_50**	**P71**	**BN71B4**	131
30	73	0.9	45	2680		—			**VF 49_45**	**P71**	**BN71B4**	120
30	78	1.9	45	4400	**W 63_45**	**S1**	**M1SD4**	126	**W 63_45**	**P71**	**BN71B4**	127
30	88	2.0	45	4250		—			**WR 63_45**	**P71**	**BN71B4**	128
30	93	3.2	45	5885		—			**WR 75_45**	**P71**	**BN71B4**	132
34	74	3.4	40	5820	**W 75_40**	**S1**	**M1SD4**	130	**W 75_40**	**P71**	**BN71B4**	131
36	69	2.3	38	4180	**W 63_38**	**S1**	**M1SD4**	126	**W 63_38**	**P71**	**BN71B4**	127
38	62	1.1	36	2530		—			**VF 49_36**	**P71**	**BN71B4**	120
38	73	2.2	36	3980		—			**WR 63_36**	**P71**	**BN71B4**	128
46	57	2.8	30	3900	**W 63_30**	**S1**	**M1SD4**	126	**W 63_30**	**P71**	**BN71B4**	127
49	51	1.4	28	2360		—			**VF 49_28**	**P71**	**BN71B4**	120
57	46	1.4	24	2250		—			**VF 49_24**	**P71**	**BN71B4**	120
57	48	3.2	24	3650	**W 63_24**	**S1**	**M1SD4**	126	**W 63_24**	**P71**	**BN71B4**	127
65	42	1.7	14	1940		—			**VF 49_14**	**P80**	**BN80A6**	120
69	40	1.0	20	1870		—			**VF 44_20**	**P71**	**BN71B4**	114
72	40	3.8	19	3400	**W 63_19**	**S1**	**M1SD4**	126	**W 63_19**	**P71**	**BN71B4**	127
76	36	1.6	18	2080		—			**VF 49_18**	**P71**	**BN71B4**	120
79	33	0.9	35	1860		—			**VF 44_35**	**P71**	**BN71A2**	114
91	32	2.0	10	1930		—			**VF 49_10**	**P80**	**BN80A6**	120
98	29	1.0	14	1690		—			**VF 44_14**	**P71**	**BN71B4**	114
98	29	2.2	14	1940		—			**VF 49_14**	**P71**	**BN71B4**	120
117	24	2.0	24	1880		—			**VF 49_24**	**P71**	**BN71A2**	120
137	22	1.3	10	1520		—			**VF 44_10**	**P71**	**BN71B4**	114
137	22	2.7	10	1750		—			**VF 49_10**	**P71**	**BN71B4**	120

0.37 kW

n_2 min-1	M_2 Nm	S	i	R_{n2} N				IEC		
138	21	1.4	20	1570	—		VF 44_20	P71	BN71A2	114
153	19	2.3	18	1720	—		VF 49_18	P71	BN71A2	120
196	16	1.9	7	1360	—		VF 44_7	P71	BN71B4	114
196	16	3.5	7	1570	—		VF 49_7	P71	BN71B4	120
275	11	2.0	10	1260	—		VF 44_10	P71	BN71A2	114
393	8	2.8	7	1120	—		VF 44_7	P71	BN71A2	114

0.55 kW

n_2 min-1	M_2 Nm	S	i	R_{n2} N				IEC		
0.29	4019	1.1	3200	19500	—		W/VF 86/185_3200	P80	BN80B6	159
0.36	3946	1.1	2560	19500	—		W/VF 86/185_2560	P80	BN80B6	159
0.43	2902	1.4	3200	19500	—		W/VF 86/185_3200	P80	BN80A4	159
0.47	3004	0.9	2944	16000	—		W/VF 86/150_2944	P80	BN80A4	153
0.50	3362	1.3	1840	19500	—		W/VF 86/185_1840	P80	BN80B6	159
0.54	2805	1.5	2560	19500	—		W/VF 86/185_2560	P80	BN80A4	159
0.76	2642	1.0	1840	16000	—		W/VF 86/150_1840	P80	BN80A4	153
0.76	2364	1.8	1840	19500	—		W/VF 86/185_1840	P80	BN80A4	159
0.77	1905	0.9	1800	13800	—		W/VF 63/130_1800	P80	BN80A4	147
0.87	2116	2.0	1600	19500	—		W/VF 86/185_1600	P80	BN80A4	159
0.91	1838	1.0	1520	13800	—		W/VF 63/130_1520	P80	BN80A4	147
1.0	1996	2.2	920	19500	—		W/VF 86/185_920	P80	BN80B6	159
1.0	2190	1.2	1380	16000	—		W/VF 86/150_1380	P80	BN80A4	153
1.2	1542	1.2	1200	13800	—		W/VF 63/130_1200	P80	BN80A4	147
1.2	1542	2.7	1200	19500	—		W/VF 86/185_1200	P80	BN80A4	159
1.3	1852	1.5	690	16000	—		W/VF 86/150_690	P80	BN80B6	153
1.4	1342	1.3	960	13800	—		W/VF 63/130_960	P80	BN80A4	147
1.5	1564	1.7	920	16000	—		W/VF 86/150_920	P80	BN80A4	153
1.5	1460	2.9	920	19500	—		W/VF 86/185_920	P80	BN80A4	159
1.5	1473	3.0	600	19500	—		W/VF 86/185_600	P80	BN80B6	159
1.7	1300	3.2	800	19500	—		W/VF 86/185_800	P80	BN80A4	159
1.7	1570	1.7	529	16000	—		W/VF 86/150_529	P80	BN80B6	153
1.8	1120	1.6	760	13800	—		W/VF 63/130_760	P80	BN80A4	147
2.0	1304	2.0	690	16000	—		W/VF 86/150_690	P80	BN80A4	153
2.3	1028	1.0	400	8000	—		VF/W 49/110_400	P80	BN80B6	141
2.3	907	2.0	600	13800	—		W/VF 63/130_600	P80	BN80A4	147
2.6	837	1.2	540	8000	—		VF/W 49/110_540	P80	BN80A4	141
2.6	1099	2.4	529	16000	—		W/VF 86/150_529	P80	BN80A4	153
3.0	956	2.7	460	16000	—		W/VF 86/150_460	P80	BN80A4	153
3.1	839	1.2	300	13800	—		VFR 130_300	P80	BN80B6	144
3.1	805	1.3	300	8000	—		VF/W 49/110_300	P80	BN80B6	141
3.5	680	1.5	400	8000	—		VF/W 49/110_400	P80	BN80A4	141
3.5	665	2.7	400	13800	—		W/VF 63/130_400	P80	BN80A4	147
3.8	740	1.6	240	13800	—		VFR 130_240	P80	BN80B6	144
4.0	670	1.6	230	8000	—		VF/W 49/110_230	P80	BN80B6	141
4.0	756	3.4	345	16000	—		W/VF 86/150_345	P80	BN80A4	153
4.6	578	0.9	300	8000	—		WR 110_300	P80	BN80A4	140
4.6	601	1.5	300	13800	—		VFR 130_300	P80	BN80A4	144
4.6	544	1.8	300	8000	—		VF/W 49/110_300	P80	BN80A4	141
4.8	625	1.1	192	8000	—		WR 110_192	P80	BN80B6	140
5.0	529	3.4	280	13800	—		W/VF 63/130_280	P80	BN80A4	147
5.8	508	1.1	240	8000	—		WR 110_240	P80	BN80A4	140
5.8	517	2.2	240	13800	—		VFR 130_240	P80	BN80A4	144
6.0	452	2.2	230	8000	—		VF/W 49/110_230	P80	BN80A4	141
6.7	504	3.0	138	13800	—		VFR 130_138	P80	BN80B6	144
7.2	435	1.4	192	8000	—		WR 110_192	P80	BN80A4	140
7.2	443	2.7	192	13800	—		VFR 130_192	P80	BN80A4	144
7.7	432	1.0	120	7000	—		WR 86_120	P80	BN80B6	136
8.3	381	0.9	168	7000	—		WR 86_168	P80	BN80A4	136
8.3	400	1.8	168	8000	—		WR 110_168	P80	BN80A4	140
8.3	406	3.0	168	13800	—		VFR 130_168	P80	BN80A4	144

0.55 kW

n_2 min-1	M_2 Nm	S	i	R_{n2} N						IEC		
9.2	325	1.5	100	8000	**W 110_100**	**S2**	**M2SA6**	138	**W 110_100**	**P80**	**BN80B6**	139
10.1	329	1.2	138	7000		**—**			**WR 86_138**	**P80**	**BN80A4**	136
10.1	344	2.1	138	8000		**—**			**WR 110_138**	**P80**	**BN80A4**	140
10.2	344	1.1	90	6200		**—**			**WR 75_90**	**P80**	**BN80B6**	132
11.5	269	1.0	80	7000	**W 86_80**	**S2**	**M2SA6**	134	**W 86_80**	**P80**	**BN80B6**	135
11.6	286	1.1	120	6200		**—**			**WR 75_120**	**P80**	**BN80A4**	132
11.6	299	1.3	120	7000		**—**			**WR 86_120**	**P80**	**BN80A4**	136
11.6	308	2.6	120	8000		**—**			**WR 110_120**	**P80**	**BN80A4**	140
12.3	300	1.1	75	6200		**—**			**WR 75_75**	**P80**	**BN80B6**	132
13.3	288	1.4	69	7000		**—**			**WR 86_69**	**P80**	**BN80B6**	136
13.3	295	2.5	69	8000		**—**			**WR 110_69**	**P80**	**BN80B6**	140
13.8	225	1.0	100	7000	**W 86_100**	**S1**	**M1LA4**	134	**W 86_100**	**P80**	**BN80A4**	135
15.4	235	1.4	90	6200		**—**			**WR 75_90**	**P80**	**BN80A4**	132
15.4	228	1.9	90	7000		**—**			**WR 86_90**	**P80**	**BN80A4**	136
15.4	238	3.5	90	8000		**—**			**WR 110_90**	**P80**	**BN80A4**	140
16.4	211	1.5	56	7000	**W 86_56**	**S2**	**M2SA6**	134	**W 86_56**	**P80**	**BN80B6**	135
17.3	180	1.0	80	6200	**W 75_80**	**S1**	**M1LA4**	130	**W 75_80**	**P80**	**BN80A4**	131
17.3	195	1.3	80	7000	**W 86_80**	**S1**	**M1LA4**	134	**W 86_80**	**P80**	**BN80A4**	135
18.5	207	1.4	75	6200		**—**			**WR 75_75**	**P80**	**BN80A4**	132
20.1	196	1.9	69	7000		**—**			**WR 86_69**	**P80**	**BN80A4**	136
20.1	201	3.2	69	8000		**—**			**WR 110_69**	**P80**	**BN80A4**	140
20.4	162	1.0	45	4540	**W 63_45**	**S2**	**M2SA6**	126	**W 63_45**	**P80**	**BN80B6**	127
21.6	166	1.7	64	7000	**W 86_64**	**S1**	**M1LA4**	134	**W 86_64**	**P80**	**BN80A4**	135
23.0	148	1.3	60	6200	**W 75_60**	**S1**	**M1LA4**	130	**W 75_60**	**P80**	**BN80A4**	131
23.0	162	2.2	40	7000	**W 86_40**	**S2**	**M2SA6**	134	**W 86_40**	**P80**	**BN80B6**	135
23.2	175	1.7	60	6040		**—**			**WR 75_60**	**P80**	**BN80A4**	132
23.2	175	2.2	60	7000		**—**			**WR 86_60**	**P80**	**BN80A4**	136
24.2	143	1.2	38	4340	**W 63_38**	**S2**	**M2SA6**	126	**W 63_38**	**P80**	**BN80B6**	127
24.6	149	2.0	56	7000	**W 86_56**	**S1**	**M1LA4**	134	**W 86_56**	**P80**	**BN80A4**	135
27.6	129	1.7	50	5960	**W 75_50**	**S1**	**M1LA4**	130	**W 75_50**	**P80**	**BN80A4**	131
30	128	2.7	46	7000	**W 86_46**	**S1**	**M1LA4**	134	**W 86_46**	**P80**	**BN80A4**	135
31	115	1.3	45	4140	**W 63_45**	**S1**	**M1LA4**	126	**W 63_45**	**P80**	**BN80A4**	127
31	136	2.2	45	5580		**—**			**WR 75_45**	**P80**	**BN80A4**	132
31	133	2.9	45	7000		**—**			**WR 86_45**	**P80**	**BN80A4**	136
35	110	2.3	40	5610	**W 75_40**	**S1**	**M1LA4**	130	**W 75_40**	**P80**	**BN80A4**	131
35	114	2.9	40	7000	**W 86_40**	**S1**	**M1LA4**	134	**W 86_40**	**P80**	**BN80A4**	135
36	101	1.5	38	3950	**W 63_38**	**S1**	**M1LA4**	126	**W 63_38**	**P80**	**BN80A4**	127
40	105	3.3	23	7000	**W 86_23**	**S2**	**M2SA6**	134	**W 86_23**	**P80**	**BN80B6**	135
46	84	1.9	30	3700	**W 63_30**	**S1**	**M1LA4**	126	**W 63_30**	**P80**	**BN80A4**	127
46	88	3.1	30	5150	**W 75_30**	**S1**	**M1LA4**	130	**W 75_30**	**P80**	**BN80A4**	131
46	95	2.9	30	4950		**—**			**WR 75_30**	**P80**	**BN80A4**	132
49	76	1.0	28	2170		**—**			**VF 49_28**	**P80**	**BN80A4**	120
55	76	3.3	25	4880	**W 75_25**	**S1**	**M1LA4**	130	**W 75_25**	**P80**	**BN80A4**	131
58	69	0.9	24	2080		**—**			**VF 49_24**	**P80**	**BN80A4**	120
58	71	2.2	24	3480	**W 63_24**	**S1**	**M1LA4**	126	**W 63_24**	**P80**	**BN80A4**	127
66	62	1.1	14	1960		**—**			**VF 49_14**	**P80**	**BN80B6**	120
73	59	2.6	19	3260	**W 63_19**	**S1**	**M1LA4**	126	**W 63_19**	**P80**	**BN80A4**	127
77	53	1.1	18	1930		**—**			**VF 49_18**	**P80**	**BN80A4**	120
92	47	1.4	10	1800		**—**			**VF 49_10**	**P80**	**BN80B6**	120
92	47	3.2	15	3050	**W 63_15**	**S1**	**M1LA4**	126	**W 63_15**	**P80**	**BN80A4**	127
99	43	1.5	14	1810		**—**			**VF 49_14**	**P80**	**BN80A4**	120
115	39	3.6	12	2850	**W 63_12**	**S1**	**M1LA4**	126	**W 63_12**	**P80**	**BN80A4**	127
117	35	1.3	24	1800		**—**			**VF 49_24**	**P71**	**BN71B2**	120
131	35	3.7	7	2700	**W 63_7**	**S2**	**M2SA6**	126	**W 63_7**	**P80**	**BN80B6**	127
138	32	1.8	10	1650		**—**			**VF 49_10**	**P80**	**BN80A4**	120
141	30	1.0	20	1490		**—**			**VF 44_20**	**P71**	**BN71B2**	114
156	28	1.6	18	1650		**—**			**VF 49_18**	**P71**	**BN71B2**	120
197	23	2.4	7	1480		**—**			**VF 49_7**	**P80**	**BN80A4**	120
281	16	1.4	10	1210		**—**			**VF 44_10**	**P71**	**BN71B2**	114
281	16	2.7	10	1390		**—**			**VF 49_10**	**P71**	**BN71B2**	120
401	12	1.9	7	1080		**—**			**VF 44_7**	**P71**	**BN71B2**	114

0.75 kW

n_2 min-1	M_2 Nm	S	i	R_{n2} N					IEC		
0.29	4983	1.3	3200	34500	—				VF/VF 130/210_3200	P90	BN90S6	164
0.29	4733	1.9	3200	52000	—				VF/VF 130/250_3200	P90	BN90S6	170
0.36	4783	1.4	2560	34500	—				VF/VF 130/210_2560	P90	BN90S6	164
0.36	4584	2.0	2560	52000	—				VF/VF 130/250_2560	P90	BN90S6	170
0.44	3929	1.1	3200	19500	—				W/VF 86/185_3200	P80	BN80B4	159
0.50	4584	1.0	1840	19500	—				W/VF 86/185_1840	P90	BN90S6	159
0.50	4011	1.6	1840	34500	—				VF/VF 130/210_1840	P90	BN90S6	164
0.50	4154	2.2	1840	52000	—				VF/VF 130/250_1840	P90	BN90S6	170
0.55	3798	1.1	2560	19500	—				W/VF 86/185_2560	P80	BN80B4	159
0.76	3201	1.3	1840	19500	—				W/VF 86/185_1840	P80	BN80B4	159
0.88	2865	1.5	1600	19500	—				W/VF 86/185_1600	P80	BN80B4	159
1.0	2722	1.6	920	19500	—				W/VF 86/185_920	P90	BN90S6	159
1.2	2087	0.9	1200	13800	—				W/VF 63/130_1200	P80	BN80B4	147
1.2	2087	2.0	1200	19500	—				W/VF 86/185_1200	P80	BN80B4	159
1.3	2525	1.1	690	16000	—				W/VF 86/150_690	P90	BN90S6	153
1.5	1817	1.0	960	13800	—				W/VF 63/130_960	P80	BN80B4	147
1.5	2118	1.2	920	16000	—				W/VF 86/150_920	P80	BN80B4	153
1.5	1977	2.1	920	19500	—				W/VF 86/185_920	P80	BN80B4	159
1.7	2142	1.3	529	16000	—				W/VF 86/150_529	P90	BN90S6	153
1.8	1760	2.4	800	19500	—				W/VF 86/185_800	P80	BN80B4	159
1.8	1516	1.2	760	13800	—				W/VF 63/130_760	P80	BN80B4	147
2.0	1765	1.5	690	16000	—				W/VF 86/150_690	P80	BN80B4	153
2.3	1228	1.5	600	13800	—				W/VF 63/130_600	P80	BN80B4	147
2.3	1381	3.0	600	19500	—				W/VF 86/185_600	P80	BN80B4	159
2.6	1489	1.7	529	16000	—				W/VF 86/150_529	P80	BN80B4	153
3.0	1294	2.0	460	16000	—				W/VF 86/150_460	P80	BN80B4	153
3.1	1144	0.9	300	13800	—				VFR 130_300	P90	BN90S6	144
3.1	1167	1.2	300	16000	—				VFR 150_300	P90	BN90S6	150
3.1	1168	2.1	300	19500	—				VFR 185_300	P90	BN90S6	156
3.5	921	1.1	400	8000	—				VF/W 49/110_400	P80	BN80B4	141
3.5	900	2.0	400	13800	—				W/VF 63/130_400	P80	BN80B4	147
3.8	1009	1.2	240	13800	—				VFR 130_240	P90	BN90S6	144
3.8	1009	1.7	240	16000	—				VFR 150_240	P90	BN90S6	150
3.8	1009	2.8	240	19500	—				VFR 185_240	P90	BN90S6	156
4.1	1024	2.5	345	16000	—				W/VF 86/150_345	P80	BN80B4	153
4.7	813	1.1	300	13800	—				VFR 130_300	P80	BN80B4	144
4.7	737	1.4	300	8000	—				VF/W 49/110_300	P80	BN80B4	141
4.7	890	2.9	300	16000	—				W/VF 86/150_300	P80	BN80B4	153
4.8	882	2.2	192	16000	—				VFR 150_192	P90	BN90S6	150
5.0	716	2.5	280	13800	—				W/VF 63/130_280	P80	BN80B4	147
5.5	785	1.0	168	8000	—				WR 110_168	P90	BN90S6	140
5.5	798	2.4	168	16000	—				VFR 150_168	P90	BN90S6	150
5.8	700	1.6	240	13800	—				VFR 130_240	P80	BN80B4	144
6.1	612	1.6	230	8000	—				VF/W 49/110_230	P80	BN80B4	141
6.7	677	1.2	138	8000	—				WR 110_138	P90	BN90S6	140
6.7	688	2.2	138	13800	—				VFR 130_138	P90	BN90S6	144
6.7	688	3.2	138	16000	—				VFR 150_138	P90	BN90S6	150
7.3	589	1.1	192	8000	—				WR 110_192	P80	BN80B4	140
7.3	599	2.0	192	13800	—				VFR 130_192	P80	BN80B4	144
8.3	541	1.3	168	8000	—				WR 110_168	P80	BN80B4	140
8.3	550	2.2	168	13800	—				VFR 130_168	P80	BN80B4	144
9.2	444	1.1	100	8000	W 110_100	S2	M2SB6	138	W 110_100	P90	BN90S6	139
9.2	459	1.7	100	13200	—				VF 130_100	P90	BN90S6	142
10.1	445	0.9	138	7000	—				WR 86_138	P80	BN80B4	136
10.1	466	1.5	138	8000	—				WR 110_138	P80	BN80B4	140
10.1	473	2.9	138	13800	—				VFR 130_138	P80	BN80B4	144
11.5	411	1.1	80	8000	W 110_80	S2	M2SB6	138	W 110_80	P90	BN90S6	139
11.5	399	2.4	80	13200	—				VF 130_80	P90	BN90S6	142
11.7	405	1.0	120	7000	—				WR 86_120	P80	BN80B4	136
11.7	417	1.9	120	8000	—				WR 110_120	P80	BN80B4	140
11.7	411	3.4	120	13800	—				VFR 130_120	P80	BN80B4	144
13.3	403	1.9	69	8000	—				WR 110_69	P90	BN90S6	140
14.0	317	1.5	100	8000	W 110_100	S2	M2SA4	138	W 110_100	P80	BN80B4	139
14.4	314	1.0	64	7000	W 86_64	S2	M2SB6	134	W 86_64	P90	BN90S6	135
14.4	339	3.1	64	13200	—				VF 130_64	P90	BN90S6	142

0.75 kW

n_2 min^{-1}	M_2 Nm	S	i	R_{n2} N						IEC		
15.6	318	1.0	90	6200		—			**WR 75_90**	**P80**	**BN80B4**	132
15.6	308	1.4	90	7000		—			**WR 86_90**	**P80**	**BN80B4**	136
15.6	322	2.6	90	8000		—			**WR 110_90**	**P80**	**BN80B4**	140
16.4	288	1.1	56	7000	**W 86_56**	**S2**	**M2SB6**	134	**W 86_56**	**P90**	**BN90S6**	135
16.4	296	2.2	56	8000	**W 110_56**	**S2**	**M2SB6**	138	**W 110_56**	**P90**	**BN90S6**	139
17.5	262	1.0	80	7000	**W 86_80**	**S2**	**M2SA4**	134	**W 86_80**	**P80**	**BN80B4**	135
17.5	270	1.7	80	8000	**W 110_80**	**S2**	**M2SA4**	138	**W 110_80**	**P80**	**BN80B4**	139
18.4	245	1.0	50	6200	**W 75_50**	**S2**	**M2SB6**	130	**W 75_50**	**P90**	**BN90S6**	131
18.7	280	1.1	75	5980		—			**WR 75_75**	**P80**	**BN80B4**	132
20.3	265	1.4	69	7000		—			**WR 86_69**	**P80**	**BN80B4**	136
20.3	272	2.4	69	8000		—			**WR 110_69**	**P80**	**BN80B4**	140
20.4	273	1.3	45	6010		—			**WR 75_45**	**P90**	**BN90S6**	132
21.9	223	1.3	64	7000	**W 86_64**	**S2**	**M2SA4**	134	**W 86_64**	**P80**	**BN80B4**	135
21.9	229	2.3	64	8000	**W 110_64**	**S2**	**M2SA4**	138	**W 110_64**	**P80**	**BN80B4**	139
23.0	212	1.3	40	5930	**W 75_40**	**S2**	**M2SB6**	130	**W 75_40**	**P90**	**BN90S6**	131
23.3	200	1.0	60	5960	**W 75_60**	**S2**	**M2SA4**	130	**W 75_60**	**P80**	**BN80B4**	131
23.3	236	1.2	60	5640		—			**WR 75_60**	**P80**	**BN80B4**	132
23.3	236	1.6	60	7000		—			**WR 86_60**	**P80**	**BN80B4**	136
23.3	243	2.8	60	8000		—			**WR 110_60**	**P80**	**BN80B4**	140
25.0	201	1.5	56	7000	**W 86_56**	**S2**	**M2SA4**	134	**W 86_56**	**P80**	**BN80B4**	135
25.0	206	2.9	56	8000	**W 110_56**	**S2**	**M2SA4**	138	**W 110_56**	**P80**	**BN80B4**	139
28.0	174	1.3	50	5670	**W 75_50**	**S2**	**M2SA4**	130	**W 75_50**	**P80**	**BN80B4**	131
30	172	2.0	46	7000	**W 86_46**	**S2**	**M2SA4**	134	**W 86_46**	**P80**	**BN80B4**	135
30	174	3.4	46	8000	**W 110_46**	**S2**	**M2SA4**	138	**W 110_46**	**P80**	**BN80B4**	139
31	154	0.9	45	3860	**W 63_45**	**S2**	**M2SA4**	126	**W 63_45**	**P80**	**BN80B4**	127
31	184	1.6	45	5250		—			**WR 75_45**	**P80**	**BN80B4**	132
31	180	2.2	45	7000		—			**WR 86_45**	**P80**	**BN80B4**	136
35	147	1.7	40	5370	**W 75_40**	**S2**	**M2SA4**	130	**W 75_40**	**P80**	**BN80B4**	131
35	153	2.2	40	7000	**W 86_40**	**S2**	**M2SA4**	134	**W 86_40**	**P80**	**BN80B4**	135
37	136	1.1	38	3700	**W 63_38**	**S2**	**M2SA4**	126	**W 63_38**	**P80**	**BN80B4**	127
40	143	2.4	23	7000	**W 86_23**	**S2**	**M2SB6**	134	**W 86_23**	**P90**	**BN90S6**	135
47	114	1.4	30	3490	**W 63_30**	**S2**	**M2SA4**	126	**W 63_30**	**P80**	**BN80B4**	127
47	129	2.1	30	4680		—			**WR 75_30**	**P80**	**BN80B4**	132
47	118	2.3	30	4950	**W 75_30**	**S2**	**M2SA4**	130	**W 75_30**	**P80**	**BN80B4**	131
47	117	3.2	30	7000	**W 86_30**	**S2**	**M2SA4**	134	**W 86_30**	**P80**	**BN80B4**	135
56	102	2.4	25	4700	**W 75_25**	**S2**	**M2SA4**	130	**W 75_25**	**P80**	**BN80B4**	131
58	96	1.6	24	3290	**W 63_24**	**S2**	**M2SA4**	126	**W 63_24**	**P80**	**BN80B4**	127
61	96	3.3	23	7000	**W 86_23**	**S2**	**M2SA4**	134	**W 86_23**	**P80**	**BN80B4**	135
70	85	2.9	20	4400	**W 75_20**	**S2**	**M2SA4**	130	**W 75_20**	**P80**	**BN80B4**	131
74	79	1.9	19	3100	**W 63_19**	**S2**	**M2SA4**	126	**W 63_19**	**P80**	**BN80B4**	127
93	64	2.4	15	2910	**W 63_15**	**S2**	**M2SA4**	126	**W 63_15**	**P80**	**BN80B4**	127
100	58	1.1	14	1690		—			**VF 49_14**	**P80**	**BN80B4**	120
117	49	1.0	24	1710		—			**VF 49_24**	**P80**	**BN80A2**	120
117	52	2.7	12	2740	**W 63_12**	**S2**	**M2SA4**	126	**W 63_12**	**P80**	**BN80B4**	127
131	47	2.7	7	2590	**W 63_7**	**S2**	**M2SB6**	126	**W 63_7**	**P90**	**BN90S6**	127
140	43	1.4	10	1540		—			**VF 49_10**	**P80**	**BN80B4**	120
140	44	3.2	10	2600	**W 63_10**	**S2**	**M2SA4**	126	**W 63_10**	**P80**	**BN80B4**	135
187	33	3.8	15	2440	**W 63_15**	**S1**	**M1LA2**	126	**W 63_15**	**P80**	**BN80A2**	127
200	31	1.8	7	1400		—			**VF 49_7**	**P80**	**BN80B4**	120
200	32	3.8	7	2340	**W 63_7**	**S2**	**M2SA4**	126	**W 63_7**	**P80**	**BN80B4**	127
280	22	2.0	10	1340		—			**VF 49_10**	**P80**	**BN80A2**	120
400	16	2.6	7	1200		—			**VF 49_7**	**P80**	**BN80A2**	120

1.1 kW

n_2 min^{-1}	M_2 Nm	S	i	R_{n2} N						IEC		
0.29	7308	0.9	3200	34500		—			**VF/VF 130/210_3200**	**P90**	**BN90L6**	164
0.29	6942	1.3	3200	52000		—			**VF/VF 130/250_3200**	**P90**	**BN90L6**	170
0.36	7016	0.9	2560	34500		—			**VF/VF 130/210_2560**	**P90**	**BN90L6**	164
0.36	6723	1.4	2560	52000		—			**VF/VF 130/250_2560**	**P90**	**BN90L6**	170
0.44	5283	1.2	3200	34500		—			**VF/VF 130/210_3200**	**P90**	**BN90S4**	164

Bonfiglioli Riduttori

1.1 kW

n_2 min-1	M_2 Nm	S	i	R_{n2} N					IEC		
0.44	5042	1.8	3200	52000	—				VF/VF 130/250_3200	P90	BN90S4	170
0.50	7143	0.9	1840	34500	—				VF/VF 130/210_1840	P90	BN90L6	164
0.50	6093	1.5	1840	52000	—				VF/VF 130/250_1840	P90	BN90L6	170
0.55	4610	1.4	2560	34500	—				VF/VF 130/210_2560	P90	BN90S4	164
0.55	4802	1.9	2560	52000	—				VF/VF 130/250_2560	P90	BN90S4	170
0.76	4694	0.9	1840	19500	—				W/VF 86/185_1840	P90	BN90S4	159
0.76	4832	1.3	1840	34500	—				VF/VF 130/210_1840	P90	BN90S4	164
0.76	4280	2.1	1840	52000	—				VF/VF 130/250_1840	P90	BN90S4	170
0.88	4202	1.0	1600	19500	—				W/VF 86/185_1600	P90	BN90S4	159
1.0	3992	1.1	920	19500	—				W/VF 86/185_920	P90	BN90L6	159
1.2	3061	1.4	1200	19500	—				W/VF 86/185_1200	P90	BN90S4	159
1.5	2899	1.4	920	19500	—				W/VF 86/185_920	P90	BN90S4	159
1.8	2581	1.6	800	19500	—				W/VF 86/185_800	P90	BN90S4	159
2.0	2589	1.0	690	16000	—				W/VF 86/150_690	P90	BN90S4	153
2.3	1801	1.0	600	13800	—				W/VF 63/130_600	P90	BN90S4	147
2.3	2026	2.1	600	19500	—				W/VF 86/185_600	P90	BN90S4	159
2.6	2183	1.2	529	16000	—				W/VF 86/150_529	P90	BN90S4	153
3.0	1898	1.4	460	16000	—				W/VF 86/150_460	P90	BN90S4	153
3.1	1713	1.4	300	19500	—				VFR 185_300	P90	BN90L6	156
3.5	1321	1.4	400	13800	—				W/VF 63/130_400	P90	BN90S4	147
3.5	1441	2.9	400	19500	—				W/VF 86/185_400	P90	BN90S4	159
3.8	1480	1.1	240	16000	—				VFR 150_240	P90	BN90L6	150
3.8	1480	1.9	240	19500	—				VFR 185_240	P90	BN90L6	156
4.1	1501	1.7	345	16000	—				W/VF 86/150_345	P90	BN90S4	153
4.7	1222	1.1	300	16000	—				VFR 150_300	P90	BN90S4	150
4.7	1238	1.9	300	19500	—				VFR 185_300	P90	BN90S4	156
4.7	1306	2.0	300	16000	—				W/VF 86/150_300	P90	BN90S4	153
4.8	1272	1.0	192	13800	—				VFR 130_192	P90	BN90L6	144
5.0	1051	1.7	280	13800	—				W/VF 63/130_280	P90	BN90S4	147
5.8	1026	1.1	240	13800	—				VFR 130_240	P90	BN90S4	144
5.8	1044	1.5	240	16000	—				VFR 150_240	P90	BN90S4	150
5.8	1063	2.6	240	19500	—				VFR 185_240	P90	BN90S4	156
6.2	1064	2.4	225	16000	—				W/VF 86/150_225	P90	BN90S4	153
6.7	1008	1.5	138	13800	—				VFR 130_138	P90	BN90L6	144
6.7	1008	2.2	138	16000	—				VFR 150_138	P90	BN90L6	150
7.0	960	2.7	200	16000	—				W/VF 86/150_200	P90	BN90S4	153
7.3	879	1.4	192	13800	—				VFR 130_192	P90	BN90S4	144
7.3	893	1.9	192	16000	—				VFR 150_192	P90	BN90S4	150
7.7	891	1.0	120	8000	—				WR 110_120	P90	BN90L6	140
7.8	878	3.4	180	19500	—				VFR 185_180	P90	BN90S4	156
8.3	807	1.5	168	13800	—				VFR 130_168	P90	BN90S4	144
8.3	819	2.1	168	16000	—				VFR 150_168	P90	BN90S4	150
9.2	674	1.2	100	13200	—				VF 130_100	P90	BN90L6	142
10.1	683	1.0	138	8000	—				WR 110_138	P90	BN90S4	140
10.1	694	1.9	138	13800	—				VFR 130_138	P90	BN90S4	144
10.1	704	2.8	138	16000	—				VFR 150_138	P90	BN90S4	150
10.2	678	1.3	90	8000	—				WR 110_90	P90	BN90L6	140
11.5	585	1.6	80	13200	—				VF 130_80	P90	BN90L6	142
11.7	612	1.3	120	8000	—				WR 110_120	P90	BN90S4	140
11.7	603	2.3	120	13800	—				VFR 130_120	P90	BN90S4	144
11.7	612	3.3	120	16000	—				VFR 150_120	P90	BN90S4	150
14.0	465	1.0	100	8000	W 110_100	S2	M2SB4	138	W 110_100	P90	BN90S4	139
14.0	525	1.1	100	12600	—				VF 130_100	P90	BN90S4	142
15.6	473	1.8	90	8000	—				WR 110_90	P90	BN90S4	140
15.6	479	3.1	90	13800	—				VFR 130_90	P90	BN90S4	144
17.5	396	1.2	80	8000	W 110_80	S2	M2SB4	138	W 110_80	P90	BN90S4	139
17.5	408	2.2	80	12600	—				VF 130_80	P90	BN90S4	142
20.0	362	1.0	46	7000	W 86_46	S3	M3SA6	134	W 86_46	P90	BN90L6	135
20.0	383	3.0	46	13200	—				VF 130_46	P90	BN90L6	142
20.3	388	1.0	69	7000	—				WR 86_69	P90	BN90S4	136
20.3	399	1.6	69	8000	—				WR 110_69	P90	BN90S4	140
20.3	393	3.3	69	13800	—				VFR 130_69	P90	BN90S4	144
21.9	336	1.6	64	8000	W 110_64	S2	M2SB4	138	W 110_64	P90	BN90S4	139
21.9	341	2.7	64	12600	—				VF 130_64	P90	BN90S4	142
23.0	324	1.1	40	7000	W 86_40	S3	M3SA6	134	W 86_40	P90	BN90L6	135

1.1 kW

n_2 min-1	M_2 Nm	S	i	R_{n2} N						IEC		
23.3	347	1.1	60	7000		—			WR 86_60	P90	BN90S4	136
23.3	356	1.9	60	8000		—			WR 110_60	P90	BN90S4	140
25.0	294	1.0	56	7000	W 86_56	S2	M2SB4	134	W 86_56	P90	BN90S4	135
25.0	303	2.0	56	8000	W 110_56	S2	M2SB4	138	W 110_56	P90	BN90S4	139
25.0	307	3.1	56	12600		—			VF 130_56	P90	BN90S4	142
30	252	1.3	46	7000	W 86_46	S2	M2SB4	134	W 86_46	P90	BN90S4	135
30	255	2.3	46	8000	W 110_46	S2	M2SB4	138	W 110_46	P90	BN90S4	139
31	270	1.1	45	5010		—			WR 75_45	P90	BN90S4	132
31	263	1.5	45	7000		—			WR 86_45	P90	BN90S4	136
31	270	2.6	45	8000		—			WR 110_45	P90	BN90S4	140
35	216	1.2	40	4980	W 75_40	S2	M2SB4	130	W 75_40	P90	BN90S4	131
35	225	1.5	40	7000	W 86_40	S2	M2SB4	134	W 86_40	P90	BN90S4	135
35	228	2.9	40	8000	W 110_40	S2	M2SB4	138	W 110_40	P90	BN90S4	139
37	217	1.2	37.5	4790		—			WR 75_37.5	P90	BN90S4	132
40	210	1.6	23	7000	W 86_23	S3	M3SA6	134	W 86_23	P90	BN90L6	135
41	207	1.7	34.5	7000		—			WR 86_34.5	P90	BN90S4	136
47	167	1.0	30	3130	W 63_30	S2	M2SB4	126	W 63_30	P90	BN90S4	127
47	189	1.5	30	4530		—			WR 75_30	P90	BN90S4	132
47	173	1.6	30	4640	W 75_30	S2	M2SB4	130	W 75_30	P90	BN90S4	131
47	185	1.9	30	7000		—			WR 86_30	P90	BN90S4	136
47	171	2.2	30	7000	W 86_30	S2	M2SB4	134	W 86_30	P90	BN90S4	135
56	150	1.7	25	4420	W 75_25	S2	M2SB4	130	W 75_25	P90	BN90S4	131
58	140	1.1	24	2990	W 63_24	S2	M2SB4	126	W 63_24	P90	BN90S4	127
61	142	2.3	23	7000	W 86_23	S2	M2SB4	134	W 86_23	P90	BN90S4	135
70	125	2.0	20	4160	W 75_20	S2	M2SB4	130	W 75_20	P90	BN90S4	131
70	126	2.5	20	7000	W 86_20	S2	M2SB4	134	W 86_20	P90	BN90S4	135
74	115	1.3	19	2840	W 63_19	S2	M2SB4	126	W 63_19	P90	BN90S4	127
93	93	1.6	15	2690	W 63_15	S2	M2SB4	126	W 63_15	P90	BN90S4	127
93	96	2.6	15	3850	W 75_15	S2	M2SB4	130	W 75_15	P90	BN90S4	131
93	96	3.4	15	6820	W 86_15	S2	M2SB4	134	W 86_15	P90	BN90S4	135
117	77	1.8	12	2550	W 63_12	S2	M2SB4	126	W 63_12	P90	BN90S4	127
140	65	2.2	10	2440	W 63_10	S2	M2SB4	126	W 63_10	P90	BN90S4	127
140	66	3.5	10	3420	W 75_10	S2	M2SB4	130	W 75_10	P90	BN90S4	131
187	48	2.6	15	2330	W 63_15	S2	M2SA2	126	W 63_15	P80	BN80B2	127
200	44	1.1	14	1370		—			VF 49_14	P80	BN80B2	120
200	46	2.6	7	2210	W 63_7	S2	M2SB4	126	W 63_7	P90	BN90S4	127
233	39	3.2	12	2190	W 63_12	S2	M2SA2	126	W 63_12	P80	BN80B2	127
280	32	1.4	10	1250		—			VF 49_10	P80	BN80B2	120
280	33	3.8	10	2080	W 63_10	S2	M2SA2	126	W 63_10	P80	BN80B2	127
400	23	1.8	7	1130		—			VF 49_7	P80	BN80B2	120

1.5 kW

n_2 min-1	M_2 Nm	S	i	R_{n2} N						IEC		
0.29	9266	1.0	3200	52000		—			VF/VF 130/250_3200	P100	BN100LA6	170
0.37	8973	1.0	2560	52000		—			VF/VF 130/250_2560	P100	BN100LA6	170
0.44	7152	0.9	3200	34500		—			VF/VF 130/210_3200	P90	BN90LA4	164
0.44	6827	1.3	3200	52000		—			VF/VF 130/250_3200	P90	BN90LA4	170
0.51	8132	1.1	1840	52000		—			VF/VF 130/250_1840	P100	BN100LA6	170
0.55	6242	1.0	2560	34500		—			VF/VF 130/210_2560	P90	BN90LA4	164
0.55	6502	1.4	2560	52000		—			VF/VF 130/250_2560	P90	BN90LA4	170
0.77	6543	1.0	1840	34500		—			VF/VF 130/210_1840	P90	BN90LA4	164
0.77	5795	1.6	1840	52000		—			VF/VF 130/250_1840	P90	BN90LA4	170
1.0	4907	1.3	920	34500		—			VF/VF 130/210_920	P100	BN100LA6	164
1.0	4907	1.9	920	52000		—			VF/VF 130/250_920	P100	BN100LA6	170
1.2	4145	1.0	1200	19500		—			W/VF 86/185_1200	P90	BN90LA4	159
1.2	4633	1.4	800	34500		—			VF/VF 130/210_800	P100	BN100LA6	164
1.2	4877	1.9	800	52000		—			VF/VF 130/250_800	P100	BN100LA6	170
1.5	3926	1.1	920	19500		—			W/VF 86/185_920	P90	BN90LA4	159
1.6	3932	1.7	600	34500		—			VF/VF 130/210_600	P100	BN100LA6	164
1.6	3932	2.3	600	52000		—			VF/VF 130/250_600	P100	BN100LA6	170

Bonfiglioli Riduttori

1.5 kW

n_2 min-1	M_2 Nm	S	i	R_{n2} N						IEC		
1.8	3495	1.2	800	19500	—			W/VF 86/185_800	P90	BN90LA4	159
2.4	2743	1.5	600	19500	—			W/VF 86/185_600	P90	BN90LA4	159
2.4	2926	2.2	400	34500	—			VF/VF 130/210_400	P100	BN100LA6	164
2.4	2865	3.2	400	52000	—			VF/VF 130/250_400	P100	BN100LA6	170
2.7	2956	0.9	529	16000	—			W/VF 86/150_529	P90	BN90LA4	153
3.1	2570	1.0	460	16000	—			W/VF 86/150_460	P90	BN90LA4	153
3.1	2286	1.0	300	19500	—			VFR 185_300	P100	BN100LA6	156
3.1	2240	1.6	300	34500	—			VFR 210_300	P100	BN100LA6	162
3.1	2377	2.2	300	52000	—			VFR 250_300	P100	BN100LA6	168
3.4	2134	3.0	280	34500	—			VF/VF 130/210_280	P100	BN100LA6	164
3.5	1788	1.0	400	13800	—			W/VF 63/130_400	P90	BN90LA4	147
3.5	1951	2.2	400	19500	—			W/VF 86/185_400	P90	BN90LA4	159
3.9	1975	0.9	240	16000	—			VFR 150_240	P100	BN100LA6	150
3.9	1975	1.4	240	19500	—			VFR 185_240	P100	BN100LA6	156
3.9	1975	2.2	240	34500	—			VFR 210_240	P100	BN100LA6	162
3.9	2048	2.8	240	52000	—			VFR 250_240	P100	BN100LA6	168
4.1	2033	1.3	345	16000	—			W/VF 86/150_345	P90	BN90LA4	153
4.7	1676	1.4	300	19500	—			VFR 185_300	P90	BN90LA4	156
4.7	1768	1.5	300	16000	—			W/VF 86/150_300	P90	BN90LA4	153
4.9	1726	1.1	192	16000	—			VFR 150_192	P100	BN100LA6	150
5.0	1422	1.3	280	13800	—			W/VF 63/130_280	P90	BN90LA4	147
5.0	1479	2.8	280	19500	—			W/VF 86/185_280	P90	BN90LA4	159
5.2	1646	2.0	180	19500	—			VFR 185_180	P100	BN100LA6	156
5.2	1481	3.3	180	34500	—			VFR 210_180	P100	BN100LA6	162
5.6	1536	0.9	168	13800	—			VFR 130_168	P100	BN100LA6	144
5.9	1414	1.1	240	16000	—			VFR 150_240	P90	BN90LA4	150
5.9	1439	1.9	240	19500	—			VFR 185_240	P90	BN90LA4	156
6.3	1440	1.8	225	16000	—			W/VF 86/150_225	P90	BN90LA4	153
7.1	1300	2.0	200	16000	—			W/VF 86/150_200	P90	BN90LA4	153
7.3	1190	1.0	192	13800	—			VFR 130_192	P90	BN90LA4	144
7.3	1209	1.4	192	16000	—			VFR 150_192	P90	BN90LA4	150
7.8	1189	2.5	180	19500	—			VFR 185_180	P90	BN90LA4	156
8.4	1092	1.1	168	13800	—			VFR 130_168	P90	BN90LA4	144
8.4	1109	1.6	168	16000	—			VFR 150_168	P90	BN90LA4	150
9.4	930	1.2	100	15500	—			VF 150_100	P100	BN100LA6	148
9.4	945	2.1	100	19500	—			VF 185_100	P100	BN100LA6	154
9.4	1021	3.2	150	16000	—			VFR 185_150	P90	BN90LA4	156
10.2	939	1.4	138	13800	—			VFR 130_138	P90	BN90LA4	144
10.2	953	2.1	138	16000	—			VFR 150_138	P90	BN90LA4	150
10.4	905	1.0	90	8000	—			WR 110_90	P100	BN100LA6	140
10.4	1001	3.2	90	19500	—			VFR 185_90	P100	BN100LA6	156
11.8	829	1.0	120	8000	—			WR 110_120	P90	BN90LA4	140
11.8	780	1.2	80	13200	—			VF 130_80	P100	BN100LA6	142
11.8	792	1.7	80	15500	—			VF 150_80	P100	BN100LA6	148
11.8	817	1.7	120	13800	—			VFR 130_120	P90	BN90LA4	144
11.8	829	2.4	120	16000	—			VFR 150_120	P90	BN90LA4	150
11.8	805	3.0	80	19000	—			VF 185_80	P100	BN100LA6	154
13.6	789	1.0	69	8000	—			WR 110_69	P100	BN100LA6	140
13.6	778	1.9	69	13800	—			VFR 130_69	P100	BN100LA6	144
13.6	778	2.6	69	16000	—			VFR 150_69	P100	BN100LA6	150
14.7	673	2.2	64	15500	—			VF 150_64	P100	BN100LA6	148
15.7	640	1.3	90	8000	—			WR 110_90	P90	BN90LA4	140
15.7	649	2.3	90	13800	—			VFR 130_90	P90	BN90LA4	144
15.7	658	3.0	90	16000	—			VFR 150_90	P90	BN90LA4	150
16.8	580	1.1	56	8000	W 110_56	S3	M3LA6	138	W 110_56	P100	BN100LA6	139
16.8	597	1.8	56	13200	—			VF 130_56	P100	BN100LA6	142
16.8	606	2.5	56	15500	—			VF 150_56	P100	BN100LA6	148
17.6	553	1.6	80	12600	—			VF 130_80	P90	BN90LA4	142
20.4	540	1.2	69	8000	—			WR 110_69	P90	BN90LA4	140
20.4	498	1.3	46	8000	W 110_46	S3	M3LA6	138	W 110_46	P100	BN100LA6	139
20.4	533	2.4	69	13800	—			VFR 130_69	P90	BN90LA4	144
20.4	519	3.4	46	15500	—			VF 150_46	P100	BN100LA6	148
20.4	540	3.4	69	16000	—			VFR 150_69	P90	BN90LA4	150
22.0	455	1.2	64	8000	W 110_64	S3	M3SA4	138	W 110_64	P90	BN90LA4	139
22.0	462	2.0	64	12600	—			VF 130_64	P90	BN90LA4	142

1.5 kW

n_2 min^{-1}	M_2 Nm	S	i	R_{n2} N						IEC		
23.5	482	1.4	60	8000		—			**WR 110_60**	**P90**	**BN90LA4**	140
23.5	445	2.7	40	13200		—			**VF 130_40**	**P100**	**BN100LA6**	142
23.5	475	2.8	60	13800		—			**VFR 130_60**	**P90**	**BN90LA4**	144
25.2	410	1.5	56	8000	**W 110_56**	**S3**	**M3SA4**	138	**W 110_56**	**P90**	**BN90LA4**	139
25.2	415	2.3	56	12600		—			**VF 130_56**	**P90**	**BN90LA4**	142
31	341	1.0	46	7000	**W 86_46**	**S3**	**M3SA4**	134	**W 86_46**	**P90**	**BN90LA4**	135
31	346	1.7	46	8000	**W 110_46**	**S3**	**M3SA4**	138	**W 110_46**	**P90**	**BN90LA4**	139
31	355	3.0	46	12600		—			**VF 130_46**	**P90**	**BN90LA4**	142
31	357	1.1	45	7000		—			**WR 86_45**	**P90**	**BN90LA4**	136
31	366	1.9	45	8000		—			**WR 110_45**	**P90**	**BN90LA4**	140
35	305	1.1	40	7000	**W 86_40**	**S3**	**M3SA4**	134	**W 86_40**	**P90**	**BN90LA4**	135
35	309	2.2	40	8000	**W 110_40**	**S3**	**M3SA4**	138	**W 110_40**	**P90**	**BN90LA4**	139
38	293	0.9	37.5	4330		—			**WR 75_37.5**	**P90**	**BN90LA4**	132
38	293	0.9	25	4330	**W 75_25**	**S3**	**M3LA6**	130	**W 75_25**	**P100**	**BN100LA6**	131
41	280	1.2	34.5	7000		—			**WR 86_34.5**	**P90**	**BN90LA4**	136
41	280	1.2	23	7000	**W 86_23**	**S3**	**M3LA6**	134	**W 86_23**	**P100**	**BN100LA6**	135
47	256	1.1	30	4130		—			**WR 75_30**	**P90**	**BN90LA4**	132
47	235	1.2	30	4270	**W 75_30**	**S3**	**M3SA4**	130	**W 75_30**	**P90**	**BN90LA4**	131
47	250	1.4	30	7000		—			**WR 86_30**	**P90**	**BN90LA4**	136
47	232	1.6	30	7000	**W 86_30**	**S3**	**M3SA4**	134	**W 86_30**	**P90**	**BN90LA4**	135
47	235	3.0	30	8000	**W 110_30**	**S3**	**M3SA4**	138	**W 110_30**	**P90**	**BN90LA4**	139
56	203	1.2	25	4100	**W 75_25**	**S3**	**M3SA4**	130	**W 75_25**	**P90**	**BN90LA4**	131
61	192	1.7	23	7000	**W 86_23**	**S3**	**M3SA4**	134	**W 86_23**	**P90**	**BN90LA4**	135
61	194	2.8	23	8000	**W 110_23**	**S3**	**M3SA4**	138	**W 110_23**	**P90**	**BN90LA4**	139
71	169	1.5	20	3880	**W 75_20**	**S3**	**M3SA4**	130	**W 75_20**	**P90**	**BN90LA4**	131
71	171	1.9	20	7000	**W 86_20**	**S3**	**M3SA4**	134	**W 86_20**	**P90**	**BN90LA4**	135
71	171	3.3	20	8000	**W 110_20**	**S3**	**M3SA4**	138	**W 110_20**	**P90**	**BN90LA4**	139
74	156	1.0	19	2550		—			**W 63_19**	**P90**	**BN90LA4**	127
94	126	1.2	15	2450		—			**W 63_15**	**P90**	**BN90LA4**	127
94	130	1.9	15	3630	**W 75_15**	**S3**	**M3SA4**	130	**W 75_15**	**P90**	**BN90LA4**	131
94	131	2.4	15	6520		—			**WR 86_15**	**P90**	**BN90LA4**	136
94	130	2.5	15	6610	**W 86_15**	**S3**	**M3SA4**	134	**W 86_15**	**P90**	**BN90LA4**	135
118	104	1.4	12	2340		—			**W 63_12**	**P90**	**BN90LA4**	127
134	94	2.2	7	3150	**W 75_7**	**S3**	**M3LA6**	130	**W 75_7**	**P100**	**BN100LA6**	131
141	87	1.6	10	2250		—			**W 63_10**	**P90**	**BN90LA4**	127
141	89	2.6	10	3250	**W 75_10**	**S3**	**M3SA4**	130	**W 75_10**	**P90**	**BN90LA4**	131
141	89	3.2	10	5850	**W 86_10**	**S3**	**M3SA4**	134	**W 86_10**	**P90**	**BN90LA4**	135
187	66	1.9	15	2200	**W 63_15**	**S2**	**M2SB2**	126	**W 63_15**	**P90**	**BN90SA2**	127
187	68	3.3	15	3120	**W 75_15**	**S2**	**M2SB2**	130	**W 75_15**	**P90**	**BN90SA2**	131
201	63	1.9	7	2060		—			**W 63_7**	**P90**	**BN90LA4**	127
201	64	3.0	7	2920	**W 75_7**	**S3**	**M3SA4**	130	**W 75_7**	**P90**	**BN90LA4**	131
201	63	3.9	7	5240	**W 86_7**	**S3**	**M3SA4**	134	**W 86_7**	**P90**	**BN90LA4**	135
233	53	2.3	12	2080	**W 63_12**	**S2**	**M2SB2**	126	**W 63_12**	**P90**	**BN90SA2**	127
280	45	2.8	10	1980	**W 63_10**	**S2**	**M2SB2**	126	**W 63_10**	**P90**	**BN90SA2**	127

1.85 kW

n_2 min^{-1}	M_2 Nm	S	i	R_{n2} N						IEC		
0.44	8480	1.1	3200	52000		—			**VF/VF 130/250_3200**	**P90**	**BN90LB4**	170
0.55	8077	1.1	2560	52000		—			**VF/VF 130/250_2560**	**P90**	**BN90LB4**	170
0.76	7198	1.3	1840	52000		—			**VF/VF 130/250_1840**	**P90**	**BN90LB4**	170
1.0	6117	1.1	920	34500		—			**VF/VF 130/210_920**	**P100**	**BN100LB6**	164
1.0	6117	1.5	920	52000		—			**VF/VF 130/250_920**	**P100**	**BN100LB6**	170
1.2	5775	1.1	800	34500		—			**VF/VF 130/210_800**	**P100**	**BN100LB6**	164
1.2	6079	1.5	800	52000		—			**VF/VF 130/250_800**	**P100**	**BN100LB6**	170
1.6	4901	1.3	600	34500		—			**VF/VF 130/210_600**	**P100**	**BN100LB6**	164
1.6	4901	1.9	600	52000		—			**VF/VF 130/250_600**	**P100**	**BN100LB6**	170
1.8	4341	1.0	800	19500		—			**W /VF 86/185_800**	**P90**	**BN90LB4**	159
2.3	3647	1.8	400	34500		—			**VF/VF 130/210_400**	**P100**	**BN100LB6**	164
2.3	3571	2.6	400	52000		—			**VF/VF 130/250_400**	**P100**	**BN100LB6**	170
2.3	3407	1.2	600	19500		—			**W/VF 86/185_600**	**P90**	**BN90LB4**	159

Bonfiglioli Riduttori

1.85 kW

n_2 min-1	M_2 Nm	S	i	R_{n2} N						IEC		
3.1	2793	1.3	300	34500	—			**VFR 210_300**	**P100**	**BN100LB6**	162
3.1	2964	1.8	300	52000	—			**VFR 250_300**	**P100**	**BN100LB6**	168
3.3	2660	2.4	280	34500	—			**VF/VF 130/210_280**	**P100**	**BN100LB6**	164
3.3	2713	3.4	280	52000	—			**VF/VF 130/250_280**	**P100**	**BN100LB6**	170
3.5	2423	1.7	400	19500	—			**W/VF 86/185_400**	**P90**	**BN90LB4**	159
3.9	2462	1.1	240	19500	—			**VFR 185_240**	**P100**	**BN100LB6**	156
3.9	2462	1.8	240	34500	—			**VFR 210_240**	**P100**	**BN100LB6**	162
3.9	2553	2.3	240	52000	—			**VFR 250_240**	**P100**	**BN100LB6**	168
4.1	2525	1.0	345	16000	—			**W/VF 86/150_345**	**P90**	**BN90LB4**	153
4.7	2082	1.1	300	19500	—			**VFR 185_300**	**P90**	**BN90LB4**	156
4.7	2196	1.2	300	16000	—			**W/VF 86/150_300**	**P90**	**BN90LB4**	153
4.8	2152	0.9	192	16000	—			**VFR 150_192**	**P100**	**BN100LB6**	150
5.0	1767	1.0	280	13800	—			**W/VF 63/130_280**	**P90**	**BN90LB4**	147
5.0	1837	2.3	280	19500	—			**W/VF 86/185_280**	**P90**	**BN90LB4**	159
5.2	2052	1.6	180	19500	—			**VFR 185_180**	**P100**	**BN100LB6**	156
5.2	1847	2.7	180	34500	—			**VFR 210_180**	**P100**	**BN100LB6**	162
5.2	2120	3.2	180	52000	—			**VFR 250_180**	**P100**	**BN100LB6**	168
5.8	1757	0.9	240	16000	—			**VFR 150_240**	**P90**	**BN90LB4**	150
5.8	1787	1.6	240	19500	—			**VFR 185_240**	**P90**	**BN90LB4**	156
6.2	1767	3.0	150	34500	—			**VFR 210_150**	**P100**	**BN100LB6**	162
6.2	1789	1.5	225	16000	—			**W/VF 86/150_225**	**P90**	**BN90LB4**	153
6.7	1678	0.9	138	13800	—			**VFR 130_138**	**P100**	**BN100LB6**	144
6.7	1678	1.3	138	16000	—			**VFR 150_138**	**P100**	**BN100LB6**	150
7.0	1615	1.6	200	16000	—			**W/VF 86/150_200**	**P90**	**BN90LB4**	153
7.3	1502	1.1	192	16000	—			**VFR 150_192**	**P90**	**BN90LB4**	150
7.8	1476	2.0	180	19500	—			**VFR 185_180**	**P90**	**BN90LB4**	156
8.3	1357	0.9	168	13800	—			**VFR 130_168**	**P90**	**BN90LB4**	144
8.3	1378	1.3	168	16000	—			**VFR 150_168**	**P90**	**BN90LB4**	150
9.3	1159	1.0	100	15500	—			**VF 150_100**	**P100**	**BN100LB6**	148
9.3	1178	1.7	100	19000	—			**VF 185_100**	**P100**	**BN100LB6**	154
9.3	1268	2.6	150	19500	—			**VFR 185_150**	**P90**	**BN90LB4**	156
10.1	1167	1.2	138	13800	—			**VFR 130_138**	**P90**	**BN90LB4**	144
10.1	1184	1.7	138	16000	—			**VFR 150_138**	**P90**	**BN90LB4**	150
11.6	973	1.0	80	13200	—			**VF 130_80**	**P100**	**BN100LB6**	142
11.6	988	1.4	80	15500	—			**VF 150_80**	**P100**	**BN100LB6**	148
11.6	1003	2.4	80	19000	—			**VF 185_80**	**P100**	**BN100LB6**	154
11.7	1015	1.4	120	13800	—			**VFR 130_120**	**P90**	**BN90LB4**	144
11.7	1030	1.9	120	16000	—			**VFR 150_120**	**P90**	**BN90LB4**	150
11.7	1060	3.4	120	19500	—			**VFR 185_120**	**P90**	**BN90LB4**	156
13.5	970	1.5	69	13800	—			**VFR 130_69**	**P100**	**BN100LB6**	144
13.5	970	2.1	69	16000	—			**VFR 150_69**	**P100**	**BN100LB6**	150
14.5	839	1.7	64	15500	—			**VF 150_64**	**P100**	**BN100LB6**	148
15.6	795	1.0	90	8000	—			**WR 110_90**	**P90**	**BN90LB4**	140
15.6	806	1.9	90	13800	—			**VFR 130_90**	**P90**	**BN90LB4**	144
15.6	818	2.4	90	16000	—			**VFR 150_90**	**P90**	**BN90LB4**	150
15.6	863	3.2	90	19500	—			**VFR 185_90**	**P90**	**BN90LB4**	156
16.6	755	2.0	56	15500	—			**VF 150_56**	**P100**	**BN100LB6**	148
17.5	687	1.3	80	12600	—			**VF 130_80**	**P90**	**BN90LB4**	142
20.2	647	2.7	46	15500	—			**VF 150_46**	**P100**	**BN100LB6**	148
20.3	670	1.0	69	8000	—			**WR 110_69**	**P90**	**BN90LB4**	140
20.3	662	2.0	69	13800	—			**VFR 130_69**	**P90**	**BN90LB4**	144
20.3	670	2.8	69	16000	—			**VFR 150_69**	**P90**	**BN90LB4**	150
21.9	565	0.9	64	8000	—			**W 110_64**	**P90**	**BN90LB4**	139
21.9	573	1.6	64	12600	—			**VF 130_64**	**P90**	**BN90LB4**	142
23.3	555	1.3	40	8000	**W 110_40**	**S3**	**M3LB6**	138	**W 110_40**	**P100**	**BN100LB6**	139
23.3	562	3.1	40	15500	—			**VF 150_40**	**P100**	**BN100LB6**	148
23.3	598	1.1	60	8000	—			**WR 110_60**	**P90**	**BN90LB4**	140
23.3	591	2.3	60	13800	—			**VFR 130_60**	**P90**	**BN90LB4**	144
23.3	598	3.2	60	16000	—			**VFR 150_60**	**P90**	**BN90LB4**	150
25.0	509	1.2	56	8000	—			**W 110_56**	**P90**	**BN90LB4**	139
25.0	516	1.9	56	12600	—			**VF 130_56**	**P90**	**BN90LB4**	142
30	430	1.4	46	8000	—			**W 110_46**	**P90**	**BN90LB4**	139
30	441	2.4	46	12600	—			**VF 130_46**	**P90**	**BN90LB4**	142
31	416	1.0	30	7000	**W 86_30**	**S3**	**M3LB6**	134	**W 86_30**	**P100**	**BN100LB6**	135
31	443	0.9	45	7000	—			**WR 86_45**	**P90**	**BN90LB4**	136

1.85 kW

n_2 min-1	M_2 Nm	S	i	R_{n2} N						IEC		
31	454	1.6	45	8000		—			**WR 110_45**	**P90**	**BN90LB4**	140
35	384	1.7	40	8000		—			**W 110_40**	**P90**	**BN90LB4**	139
40	350	1.0	23	7000	**W 86_23**	**S3**	**M3LB6**	134	**W 86_23**	**P100**	**BN100LB6**	135
40	354	3.0	23	13200		—			**VF 130_23**	**P100**	**BN100LB6**	142
41	348	1.0	34.5	7000		—			**WR 86_34.5**	**P90**	**BN90LB4**	136
42	339	3.1	69	13800		—			**VFR 130_69**	**P90**	**BN90SB2**	144
47	308	1.1	20	7000	**W 86_20**	**S3**	**M3LB6**	134	**W 86_20**	**P100**	**BN100LB6**	135
47	312	3.4	20	13200		—			**VF 130_20**	**P100**	**BN100LB6**	142
47	292	0.9	30	3960		—			**W 75_30**	**P90**	**BN90LB4**	131
47	310	1.1	30	7000		—			**WR 86_30**	**P90**	**BN90LB4**	136
47	288	1.3	30	7000		—			**W 86_30**	**P90**	**BN90LB4**	135
47	318	2.1	30	8000		—			**WR 110_30**	**P90**	**BN90LB4**	140
47	292	2.4	30	8000		—			**W 110_30**	**P90**	**BN90LB4**	139
56	252	1.0	25	3820		—			**W 75_25**	**P90**	**BN90LB4**	131
61	238	1.3	23	7000		—			**W 86_23**	**P90**	**BN90LB4**	135
61	241	2.2	23	8000		—			**W 110_23**	**P90**	**BN90LB4**	139
62	237	1.1	15	3600	**W 75_15**	**S3**	**M3LB6**	130	**W 75_15**	**P100**	**BN100LB6**	131
62	234	1.5	15	7000	**W 86_15**	**S3**	**M3LB6**	134	**W 86_15**	**P100**	**BN100LB6**	135
67	228	2.6	21	8000		—			**WR 110_21**	**P90**	**BN90LB4**	140
70	209	1.2	20	3650		—			**W 75_20**	**P90**	**BN90LB4**	131
70	212	1.5	20	6960		—			**W 86_20**	**P90**	**BN90LB4**	135
70	212	2.7	20	8000		—			**W 110_20**	**P90**	**BN90LB4**	139
93	163	1.5	10	3280	**W 75_10**	**S3**	**M3LB6**	130	**W 75_10**	**P100**	**BN100LB6**	131
93	157	1.0	15	2230		—			**W 63_15**	**P90**	**BN90LB4**	127
93	161	1.6	15	3440		—			**W 75_15**	**P90**	**BN90LB4**	131
93	161	2.1	15	6450		—			**W 86_15**	**P90**	**BN90LB4**	135
117	129	1.1	12	2150		—			**W 63_12**	**P90**	**BN90LB4**	127
133	117	1.8	7	2970	**W 75_7**	**S3**	**M3LB6**	130	**W 75_7**	**P100**	**BN100LB6**	131
133	117	2.3	7	5700	**W 86_7**	**S3**	**M3LB6**	134	**W 86_7**	**P100**	**BN100LB6**	135
140	109	1.3	10	2090		—			**W 63_10**	**P90**	**BN90LB4**	127
140	111	2.1	10	3100		—			**W 75_10**	**P90**	**BN90LB4**	131
140	111	2.6	10	5730		—			**W 86_10**	**P90**	**BN90LB4**	135
192	79	1.6	15	2080		—			**W 63_15**	**P90**	**BN90SB2**	127
192	81	2.8	15	3000		—			**W 75_15**	**P90**	**BN90SB2**	131
200	78	1.5	7	1930		—			**W 63_7**	**P90**	**BN90LB4**	127
200	80	2.4	7	2790		—			**W 75_7**	**P90**	**BN90LB4**	131
200	79	3.2	7	5140		—			**W 86_7**	**P90**	**BN90LB4**	135
240	64	2.0	12	1980		—			**W 63_12**	**P90**	**BN90SB2**	127
288	54	2.3	10	1890		—			**W 63_10**	**P90**	**BN90SB2**	127
288	55	3.7	10	2670		—			**W 75_10**	**P90**	**BN90SB2**	131
411	39	2.7	7	1720		—			**W 63_7**	**P90**	**BN90SB2**	127

2.2 kW

n_2 min-1	M_2 Nm	S	i	R_{n2} N						IEC		
0.44	10013	0.9	3200	52000		—			**VF/VF 130/250_3200**	**P100**	**BN100LA4**	170
0.55	9536	0.9	2560	52000		—			**VF/VF 130/250_2560**	**P100**	**BN100LA4**	170
0.77	8499	1.1	1840	52000		—			**VF/VF 130/250_1840**	**P100**	**BN100LA4**	170
0.88	7629	1.2	1600	52000		—			**VF/VF 130/250_1600**	**P100**	**BN100LA4**	170
1.0	7197	0.9	920	34500		—			**VF/VF 130/210_920**	**P112**	**BN112M6**	164
1.0	7197	1.3	920	52000		—			**VF/VF 130/250_920**	**P112**	**BN112M6**	170
1.2	6258	1.0	1200	34500		—			**VF/VF 130/210_1200**	**P100**	**BN100LA4**	164
1.2	6258	1.4	1200	52000		—			**VF/VF 130/250_1200**	**P100**	**BN100LA4**	170
1.5	5072	1.2	920	34500		—			**VF/VF 130/210_920**	**P100**	**BN100LA4**	164
1.5	5072	1.8	920	52000		—			**VF/VF 130/250_920**	**P100**	**BN100LA4**	170
1.8	4887	1.3	800	34500		—			**VF/VF 130/210_800**	**P100**	**BN100LA4**	164
1.8	5007	1.8	800	52000		—			**VF/VF 130/250_800**	**P100**	**BN100LA4**	170
2.4	4023	1.0	600	19500		—			**W/VF 86/185_600**	**P100**	**BN100LA4**	159
2.4	3844	1.6	600	34500		—			**VF/VF 130/210_600**	**P100**	**BN100LA4**	164
2.4	3934	2.3	600	52000		—			**VF/VF 130/250_600**	**P100**	**BN100LA4**	170
3.1	3286	1.1	300	34500		—			**VFR 210_300**	**P112**	**BN112M6**	162

Bonfiglioli Riduttori

2.2 kW

n_2 min-1	M_2 Nm	S	i	R_{n2} N						IEC		
3.1	3487	1.5	300	52000	—			**VFR 250_300**	**P112**	**BN112M6**	168
3.5	2861	1.5	400	19500	—			**W/VF 86/185_400**	**P100**	**BN100LA4**	159
3.5	2980	2.1	400	34500	—			**VF/VF 130/210_400**	**P100**	**BN100LA4**	164
3.5	2921	3.1	400	52000	—			**VF/VF 130/250_400**	**P100**	**BN100LA4**	170
3.9	2897	1.0	240	19500	—			**VFR 185_240**	**P112**	**BN112M6**	156
3.9	2897	1.5	240	34500	—			**VFR 210_240**	**P112**	**BN112M6**	162
3.9	3004	1.9	240	52000	—			**VFR 250_240**	**P112**	**BN112M6**	168
4.7	2459	0.9	300	19500	—			**VFR 185_300**	**P100**	**BN100LA4**	156
4.7	2459	1.4	300	34500	—			**VFR 210_300**	**P100**	**BN100LA4**	162
4.7	2548	2.0	300	52000	—			**VFR 250_300**	**P100**	**BN100LA4**	168
5.0	2170	1.9	280	19500	—			**W/VF 86/185_280**	**P100**	**BN100LA4**	159
5.0	2170	2.9	280	34500	—			**VF/VF 130/210_280**	**P100**	**BN100LA4**	164
5.6	2291	0.9	168	16000	—			**VFR 150_168**	**P112**	**BN112M6**	150
5.9	2110	1.3	240	19500	—			**VFR 185_240**	**P100**	**BN100LA4**	156
5.9	2110	1.8	240	34500	—			**VFR 210_240**	**P100**	**BN100LA4**	162
5.9	2181	2.5	240	52000	—			**VFR 250_240**	**P100**	**BN100LA4**	168
7.3	1774	1.0	192	16000	—			**VFR 150_192**	**P100**	**BN100LA4**	150
7.8	1690	0.9	120	13800	—			**VFR 130_120**	**P112**	**BN112M6**	144
7.8	1743	1.7	180	19500	—			**VFR 185_180**	**P100**	**BN100LA4**	156
7.8	1717	2.5	180	34500	—			**VFR 210_180**	**P100**	**BN100LA4**	162
7.8	1797	3.5	180	52000	—			**VFR 250_180**	**P100**	**BN100LA4**	168
8.4	1627	1.1	168	16000	—			**VFR 150_168**	**P100**	**BN100LA4**	150
9.4	1386	1.4	100	19000	—			**VF 185_100**	**P112**	**BN112M6**	154
9.4	1498	2.2	150	19500	—			**VFR 185_150**	**P100**	**BN100LA4**	156
9.4	1498	3.0	150	34500	—			**VFR 210_150**	**P100**	**BN100LA4**	162
10.2	1378	1.0	138	13800	—			**VFR 130_138**	**P100**	**BN100LA4**	144
10.2	1398	1.4	138	16000	—			**VFR 150_138**	**P100**	**BN100LA4**	150
10.4	1468	2.2	90	19500	—			**VFR 185_90**	**P112**	**BN112M6**	156
10.4	1448	3.2	90	34500	—			**VFR 210_90**	**P112**	**BN112M6**	162
11.8	1162	1.2	80	15500	—			**VF 150_80**	**P112**	**BN112M6**	148
11.8	1198	1.2	120	13800	—			**VFR 130_120**	**P100**	**BN100LA4**	144
11.8	1216	1.6	120	16000	—			**VFR 150_120**	**P100**	**BN100LA4**	150
11.8	1180	2.0	80	19000	—			**VF 185_80**	**P112**	**BN112M6**	154
11.8	1252	2.9	120	19500	—			**VFR 185_120**	**P100**	**BN100LA4**	156
11.8	1252	4.0	120	34500	—			**VFR 210_120**	**P100**	**BN100LA4**	162
13.6	1141	1.3	69	13800	—			**VFR 130_69**	**P112**	**BN112M6**	144
13.6	1141	1.8	69	16000	—			**VFR 150_69**	**P112**	**BN112M6**	150
14.1	969	1.2	100	14700	—			**VF 150_100**	**P100**	**BN100LA4**	148
14.1	969	2.0	100	18000	—			**VF 185_100**	**P100**	**BN100LA4**	154
14.7	973	1.1	64	13200	—			**VF 130_64**	**P112**	**BN112M6**	142
15.7	952	1.6	90	13800	—			**VFR 130_90**	**P100**	**BN100LA4**	144
15.7	966	2.0	90	16000	—			**VFR 150_90**	**P100**	**BN100LA4**	150
15.7	952	2.7	60	19000	—			**VF 185_60**	**P112**	**BN112M6**	154
15.7	1019	2.7	90	19500	—			**VFR 185_90**	**P100**	**BN100LA4**	156
16.8	876	1.2	56	13200	—			**VF 130_56**	**P112**	**BN112M6**	142
17.6	811	1.1	80	12600	—			**VF 130_80**	**P100**	**BN100LA4**	142
17.6	823	1.5	80	14700	—			**VF 150_80**	**P100**	**BN100LA4**	148
17.6	823	2.6	80	18000	—			**VF 185_80**	**P100**	**BN100LA4**	154
20.4	751	1.5	46	13200	—			**VF 130_46**	**P112**	**BN112M6**	142
20.4	781	1.7	69	13800	—			**VFR 130_69**	**P100**	**BN100LA4**	144
20.4	761	2.3	46	15500	—			**VF 150_46**	**P112**	**BN112M6**	148
20.4	792	2.3	69	16000	—			**VFR 150_69**	**P100**	**BN100LA4**	150
20.9	774	1.1	45	8000	—			**WR 110_45**	**P112**	**BN112M6**	140
22.0	677	1.4	64	12600	—			**VF 130_64**	**P100**	**BN100LA4**	142
22.0	687	1.9	64	14700	—			**VF 150_64**	**P100**	**BN100LA4**	148
23.3	660	1.1	40	8000	**W 110_40**	**S3**	**M3LC6**	138	**W 110_40**	**P112**	**BN112M6**	139
23.5	706	1.0	60	8000	—			**WR 110_60**	**P100**	**BN100LA4**	140
23.5	697	1.9	60	13800	—			**VFR 130_60**	**P100**	**BN100LA4**	144
23.5	706	2.7	60	16000	—			**VFR 150_60**	**P100**	**BN100LA4**	150
23.5	662	3.4	60	18000	—			**VF 185_60**	**P100**	**BN100LA4**	154
25.2	601	1.0	56	8000	**W 110_56**	**S3**	**M3LA4**	138	**W 110_56**	**P100**	**BN100LA4**	139
25.2	609	1.6	56	12600	—			**VF 130_56**	**P100**	**BN100LA4**	142
25.2	617	2.2	56	14200	—			**VF 150_56**	**P100**	**BN100LA4**	148
31	507	1.2	46	8000	**W 110_46**	**S3**	**M3LA4**	138	**W 110_46**	**P100**	**BN100LA4**	139
31	521	2.0	46	12600	—			**VF 130_46**	**P100**	**BN100LA4**	142

2.2 kW

n_2 min^{-1}	M_2 Nm	S	i	R_{n2} N						IEC		
31	528	2.9	46	14700		—			VF 150_46	P100	BN100LA4	148
31	536	1.3	45	8000		—			WR 110_45	P100	BN100LA4	140
31	550	3.1	45	16000		—			VFR 150_45	P100	BN100LA4	150
35	453	1.5	40	8000	W 110_40	S3	M3LA4	138	W 110_40	P100	BN100LA4	139
35	453	2.4	40	12600		—			VF 130_40	P100	BN100LA4	142
35	459	3.4	40	14700		—			VF 150_40	P100	BN100LA4	148
41	416	2.5	23	13200		—			VF 130_23	P112	BN112M6	142
47	340	1.1	30	7000	W 86_30	S3	M3LA4	134	W 86_30	P100	BN100LA4	135
47	344	2.0	30	8000	W 110_30	S3	M3LA4	138	W 110_30	P100	BN100LA4	139
47	353	3.0	30	12600		—			VF 130_30	P100	BN100LA4	142
61	281	1.1	23	6990	W 86_23	S3	M3LA4	134	W 86_23	P100	BN100LA4	135
61	284	1.9	23	8000	W 110_23	S3	M3LA4	138	W 110_23	P100	BN100LA4	139
61	284	3.1	23	12600		—			VF 130_23	P100	BN100LA4	142
71	247	1.0	20	3410	W 75_20	S3	M3LA4	130	W 75_20	P100	BN100LA4	131
71	250	1.3	20	6730	W 86_20	S3	M3LA4	134	W 86_20	P100	BN100LA4	135
71	250	2.3	20	8000	W 110_20	S3	M3LA4	138	W 110_20	P100	BN100LA4	139
94	190	1.3	15	3240	W 75_15	S3	M3LA4	130	W 75_15	P100	BN100LA4	131
94	190	1.7	15	6270	W 86_15	S3	M3LA4	134	W 86_15	P100	BN100LA4	135
94	188	3.2	15	8000	W 110_15	S3	M3LA4	138	W 110_15	P100	BN100LA4	139
133	139	1.5	7	2780	W 75_7	S3	M3LC6	130	W 75_7	P112	BN112M6	131
133	139	1.9	7	5540	W 86_7	S3	M3LC6	134	W 86_7	P112	BN112M6	135
141	131	1.8	10	2940	W 75_10	S3	M3LA4	130	W 75_10	P100	BN100LA4	131
141	131	2.2	10	5590	W 86_10	S3	M3LA4	134	W 86_10	P100	BN100LA4	135
187	99	2.3	15	2920	W 75_15	S3	M3SA2	130	W 75_15	P90	BN90L2	131
187	98	3.0	15	5290	W 86_15	S3	M3SA2	134	W 86_15	P90	BN90L2	135
192	94	1.3	15	1980		—			W 63_15	P90	BN90L2	127
201	94	2.0	7	2660	W 75_7	S3	M3LA4	130	W 75_7	P100	BN100LA4	131
201	93	2.7	7	5030	W 86_7	S3	M3LA4	134	W 86_7	P100	BN100LA4	135
240	76	1.6	12	1890		—			W 63_12	P90	BN90L2	127
281	67	3.0	10	2610	W 75_10	S3	M3SA2	130	W 75_10	P90	BN90L2	131
288	64	1.9	10	1820		—			W 63_10	P90	BN90L2	127
401	48	3.6	7	2350	W 75_7	S3	M3SA2	130	W 75_7	P90	BN90L2	131
411	46	2.3	7	1660		—			W 63_7	P90	BN90L2	127

3 kW

n_2 min^{-1}	M_2 Nm	S	i	R_{n2} N		IEC		
0.88	10403	0.9	1600	52000	—	VF/VF 130/250_1600	P100	BN100LB4	170
1.0	9814	0.9	920	52000	—	VF/VF 130/250_920	P132	BN132S6	170
1.2	8534	1.1	1200	52000	—	VF/VF 130/250_1200	P100	BN100LB4	170
1.5	6917	0.9	920	34500	—	VF/VF 130/210_920	P100	BN100LB4	164
1.5	6917	1.3	920	52000	—	VF/VF 130/250_920	P100	BN100LB4	170
1.8	6665	0.9	800	34500	—	VF/VF 130/210_800	P100	BN100LB4	164
1.8	6827	1.3	800	52000	—	VF/VF 130/250_800	P100	BN100LB4	170
2.4	5242	1.2	600	34500	—	VF/VF 130/210_600	P100	BN100LB4	164
2.4	5364	1.7	600	52000	—	VF/VF 130/250_600	P100	BN100LB4	170
3.1	4755	1.1	300	52000	—	VFR 250_300	P132	BN132S6	168
3.5	3901	1.1	400	19500	—	W /VF 86/185_400	P100	BN100LB4	159
3.5	4064	1.6	400	34500	—	VF/VF 130/210_400	P100	BN100LB4	164
3.5	3983	2.3	400	52000	—	VF/VF 130/250_400	P100	BN100LB4	170
3.9	3950	1.1	240	34500	—	VFR 210_240	P132	BN132S6	162
3.9	4096	1.4	240	52000	—	VFR 250_240	P132	BN132S6	168
4.7	3353	1.0	300	34500	—	VFR 210_300	P100	BN100LB4	162
4.7	3475	1.4	300	52000	—	VFR 250_300	P100	BN100LB4	168
5.0	2958	1.4	280	19500	—	W /VF 86/185_280	P100	BN100LB4	159
5.0	2958	2.1	280	34500	—	VF/VF 130/210_280	P100	BN100LB4	164
5.0	3015	3.0	280	52000	—	VF/VF 130/250_280	P100	BN100LB4	170
5.9	2877	1.0	240	19500	—	VFR 185_240	P100	BN100LB4	156
5.9	2877	1.4	240	34500	—	VFR 210_240	P100	BN100LB4	162
5.9	2975	1.8	240	52000	—	VFR 250_240	P100	BN100LB4	168
7.8	2377	1.3	180	19500	—	VFR 185_180	P100	BN100LB4	156

Bonfiglioli Riduttori

3 kW

n_2 min-1	M_2 Nm	S	i	R_{n2} N									
7.8	2341	1.8	180	34500		—			**VFR 210_180**	**P100**	**BN100LB4**	162
7.8	2450	2.6	180	52000		—			**VFR 250_180**	**P100**	**BN100LB4**	168
9.4	1859	1.6	100	33000		—			**VF 210_100**	**P132**	**BN132S6**	160
9.4	2042	1.6	150	19500		—			**VFR 185_150**	**P100**	**BN100LB4**	156
9.4	2042	2.2	150	34500		—			**VFR 210_150**	**P100**	**BN100LB4**	162
9.4	1920	2.5	100	50000		—			**VF 250_100**	**P132**	**BN132S6**	166
9.4	2042	3.2	150	52000		—			**VFR 250_150**	**P100**	**BN100LB4**	168
10.2	1907	1.0	138	16000		—			**VFR 150_138**	**P100**	**BN100LB4**	150
11.8	1634	0.9	120	13800		—			**VFR 130_120**	**P100**	**BN100LB4**	144
11.8	1658	1.2	120	16000		—			**VFR 150_120**	**P100**	**BN100LB4**	150
11.8	1609	1.5	80	19000		—			**VF 185_80**	**P132**	**BN132S6**	154
11.8	1585	2.1	80	33000		—			**VF 210_80**	**P132**	**BN132S6**	160
11.8	1707	2.1	120	19500		—			**VFR 185_120**	**P100**	**BN100LB4**	156
11.8	1707	2.9	120	34500		—			**VFR 210_120**	**P100**	**BN100LB4**	162
11.8	1634	3.2	80	50000		—			**VF 250_80**	**P132**	**BN132S6**	166
11.8	1731	4.0	120	52000		—			**VFR 250_120**	**P100**	**BN100LB4**	168
14.1	1321	0.9	100	14700		—			**VF 150_100**	**P100**	**BN100LB4**	148
14.1	1321	1.4	100	18000		—			**VF 185_100**	**P100**	**BN100LB4**	154
15.7	1298	1.2	90	13800		—			**VFR 130_90**	**P100**	**BN100LB4**	144
15.7	1317	1.5	90	16000		—			**VFR 150_90**	**P100**	**BN100LB4**	150
15.7	1298	2.0	60	19000		—			**VF 185_60**	**P132**	**BN132S6**	154
15.7	1390	2.0	90	19500		—			**VFR 185_90**	**P100**	**BN100LB4**	156
15.7	1390	2.9	90	34500		—			**VFR 210_90**	**P100**	**BN100LB4**	162
15.7	1280	2.9	60	33000		—			**VF 210_60**	**P132**	**BN132S6**	160
17.6	1122	1.1	80	14700		—			**VF 150_80**	**P100**	**BN100LB4**	148
17.6	1122	1.9	80	18000		—			**VF 185_80**	**P100**	**BN100LB4**	154
20.4	1066	1.2	69	13800		—			**VFR 130_69**	**P100**	**BN100LB4**	144
20.4	1080	1.7	69	16000		—			**VFR 150_69**	**P100**	**BN100LB4**	150
22.0	923	1.0	64	12600		—			**VF 130_64**	**P100**	**BN100LB4**	142
22.0	936	1.4	64	14700		—			**VF 150_64**	**P100**	**BN100LB4**	148
23.5	951	1.4	60	13800		—			**VFR 130_60**	**P100**	**BN100LB4**	144
23.5	963	2.0	60	16000		—			**VFR 150_60**	**P100**	**BN100LB4**	150
23.5	902	2.5	60	18000		—			**VF 185_60**	**P100**	**BN100LB4**	154
25.2	831	1.2	56	12600		—			**VF 130_56**	**P100**	**BN100LB4**	142
25.2	842	1.6	56	14700		—			**VF 150_56**	**P100**	**BN100LB4**	148
28.2	772	3.2	50	18000		—			**VF 185_50**	**P100**	**BN100LB4**	154
31	710	1.5	46	12600		—			**VF 130_46**	**P100**	**BN100LB4**	142
31	720	2.2	46	14700		—			**VF 150_46**	**P100**	**BN100LB4**	148
31	731	1.0	45	8000		—			**WR 110_45**	**P100**	**BN100LB4**	140
31	677	1.1	30	8000		—			**W 110_30**	**P132**	**BN132S6**	139
31	750	2.3	45	16000		—			**VFR 150_45**	**P100**	**BN100LB4**	150
31	741	3.2	30	19000		—			**VF 185_30**	**P132**	**BN132S6**	154
35	618	1.1	40	8000	**W 110_40**	**S3**	**M3LB4**	138	**W 110_40**	**P100**	**BN100LB4**	139
35	618	1.8	40	12600		—			**VF 130_40**	**P100**	**BN100LB4**	142
35	626	2.5	40	14700		—			**VF 150_40**	**P100**	**BN100LB4**	148
41	568	1.0	23	8000		—			**W 110_23**	**P132**	**BN132S6**	139
41	568	1.8	23	13200		—			**VF 130_23**	**P132**	**BN132S6**	142
41	575	2.6	23	15500		—			**VF 150_23**	**P132**	**BN132S6**	148
47	469	1.5	30	8000	**W 110_30**	**S3**	**M3LB4**	138	**W 110_30**	**P100**	**BN100LB4**	139
47	482	2.2	30	12600		—			**VF 130_30**	**P100**	**BN100LB4**	142
47	488	2.8	30	14700		—			**VF 150_30**	**P100**	**BN100LB4**	148
47	518	2.9	30	16000		—			**VFR 150_30**	**P100**	**BN100LB4**	150
61	388	1.4	23	8000	**W 110_23**	**S3**	**M3LB4**	138	**W 110_23**	**P100**	**BN100LB4**	139
61	388	2.3	23	12600		—			**VF 130_23**	**P100**	**BN100LB4**	142
61	388	3.3	23	14700		—			**VF 150_23**	**P100**	**BN100LB4**	148
71	341	0.9	20	6240	**W 86_20**	**S3**	**M3LB4**	134	**W 86_20**	**P100**	**BN100LB4**	135
71	341	1.7	20	8000	**W 110_20**	**S3**	**M3LB4**	138	**W 110_20**	**P100**	**BN100LB4**	139
71	341	2.6	20	12600		—			**VF 130_20**	**P100**	**BN100LB4**	142
94	259	1.0	15	2800	**W 75_15**	**S3**	**M3LB4**	130	**W 75_15**	**P100**	**BN100LB4**	131
94	259	1.3	15	5890	**W 86_15**	**S3**	**M3LB4**	134	**W 86_15**	**P100**	**BN100LB4**	135
94	256	2.3	15	8000	**W 110_15**	**S3**	**M3LB4**	138	**W 110_15**	**P100**	**BN100LB4**	139
94	262	3.5	15	11800		—			**VF 130_15**	**P100**	**BN100LB4**	142
124	198	3.4	23	11000		—			**VF 130_23**	**P100**	**BN100L2**	142
141	179	1.3	10	2600	**W 75_10**	**S3**	**M3LB4**	130	**W 75_10**	**P100**	**BN100LB4**	131
141	179	1.6	10	5300	**W 86_10**	**S3**	**M3LB4**	134	**W 86_10**	**P100**	**BN100LB4**	135

3 kW

n_2 min-1	M_2 Nm	S	i	R_{n2} N								
141	177	3.1	10	8000	**W 110_10**	**S3**	**M3LB4**	138	**W 110_10**	**P100**	**BN100LB4**	139
191	132	1.7	15	2680	**W 75_15**	**S3**	**M3LA2**	130	**W 75_15**	**P100**	**BN100L2**	131
191	131	2.3	15	5070	**W 86_15**	**S3**	**M3LA2**	134	**W 86_15**	**P100**	**BN100L2**	135
201	128	1.5	7	2380	**W 75_7**	**S3**	**M3LB4**	130	**W 75_7**	**P100**	**BN100LB4**	131
201	127	2.0	7	4780	**W 86_7**	**S3**	**M3LB4**	134	**W 86_7**	**P100**	**BN100LB4**	135
286	90	2.3	10	2430	**W 75_10**	**S3**	**M3LA2**	130	**W 75_10**	**P100**	**BN100L2**	131
286	90	2.9	10	4510	**W 86_10**	**S3**	**M3LA2**	134	**W 86_10**	**P100**	**BN100L2**	135
409	64	2.7	7	2190	**W 75_7**	**S3**	**M3LA2**	130	**W 75_7**	**P100**	**BN100L2**	131
409	64	3.5	7	4040	**W 86_7**	**S3**	**M3LA2**	134	**W 86_7**	**P100**	**BN100L2**	135

4 kW

n_2 min-1	M_2 Nm	S	i	R_{n2} N								
1.5	9157	1.0	920	52000	—				**VF/VF 130/250_920**	**P112**	**BN112M4**	170
1.8	9039	1.0	800	52000	—				**VF/VF 130/250_800**	**P112**	**BN112M4**	170
2.4	6941	0.9	600	34500	—				**VF/VF 130/210_600**	**P112**	**BN112M4**	164
2.4	7102	1.3	600	52000	—				**VF/VF 130/250_600**	**P112**	**BN112M4**	170
3.6	5380	1.2	400	34500	—				**VF/VF 130/210_400**	**P112**	**BN112M4**	164
3.6	5273	1.7	400	52000	—				**VF/VF 130/250_400**	**P112**	**BN112M4**	170
4.0	5404	1.1	240	52000	—				**VFR 250_240**	**P132**	**BN132MA6**	168
4.7	4600	1.1	300	52000	—				**VFR 250_300**	**P112**	**BN112M4**	168
5.1	3917	1.1	280	19500	—				**W /VF 86/185_280**	**P112**	**BN112M4**	159
5.1	3917	1.6	280	34500	—				**VF/VF 130/210_280**	**P112**	**BN112M4**	164
5.1	3992	2.3	280	52000	—				**VF/VF 130/250_280**	**P112**	**BN112M4**	170
5.3	3908	1.3	180	34500	—				**VFR 210_180**	**P132**	**BN132MA6**	162
5.3	4487	1.5	180	52000	—				**VFR 250_180**	**P132**	**BN132MA6**	168
5.9	3809	1.0	240	34500	—				**VFR 210_240**	**P112**	**BN112M4**	162
5.9	3938	1.4	240	52000	—				**VFR 250_240**	**P112**	**BN112M4**	168
7.9	3147	1.0	180	19500	—				**VFR 185_180**	**P112**	**BN112M4**	156
7.9	3099	1.4	180	34500	—				**VFR 210_180**	**P112**	**BN112M4**	162
7.9	3244	1.9	180	52000	—				**VFR 250_180**	**P112**	**BN112M4**	168
9.5	2704	1.2	150	19500	—				**VFR 185_150**	**P112**	**BN112M4**	156
9.5	2704	1.7	150	34500	—				**VFR 210_150**	**P112**	**BN112M4**	162
9.5	2704	2.4	150	52000	—				**VFR 250_150**	**P112**	**BN112M4**	168
9.5	2453	1.2	100	33000	—				**VF 210_100**	**P132**	**BN132MA6**	160
9.5	2533	1.9	100	50000	—				**VF 250_100**	**P132**	**BN132MA6**	166
11.8	2195	0.9	120	16000	—				**VFR 150_120**	**P112**	**BN112M4**	150
11.8	2260	1.6	120	19500	—				**VFR 185_120**	**P112**	**BN112M4**	156
11.8	2260	2.2	120	34500	—				**VFR 210_120**	**P112**	**BN112M4**	162
11.8	2292	3.1	120	52000	—				**VFR 250_120**	**P112**	**BN112M4**	168
11.9	2123	1.1	80	19000	—				**VF 185_80**	**P132**	**BN132MA6**	154
11.9	2091	1.6	80	33000	—				**VF 210_80**	**P132**	**BN132MA6**	160
11.9	2155	2.4	80	50000	—				**VF 250_80**	**P132**	**BN132MA6**	166
14.2	1749	1.1	100	18000	—				**VF 185_100**	**P112**	**BN112M4**	154
15.8	1719	0.9	90	13800	—				**VFR 130_90**	**P112**	**BN112M4**	144
15.8	1743	1.1	90	16000	—				**VFR 150_90**	**P112**	**BN112M4**	150
15.8	1840	1.5	90	19500	—				**VFR 185_90**	**P112**	**BN112M4**	156
15.8	1840	2.2	90	34500	—				**VFR 210_90**	**P112**	**BN112M4**	162
15.8	1888	3.2	90	52000	—				**VFR 250_90**	**P112**	**BN112M4**	168
15.8	1713	1.5	60	19000	—				**VF 185_60**	**P132**	**BN132MA6**	154
15.8	1689	2.2	60	33000	—				**VF 210_60**	**P132**	**BN132MA6**	160
15.8	1737	3.2	60	50000	—				**VF 250_60**	**P132**	**BN132MA6**	166
17.8	1485	1.4	80	18000	—				**VF 185_80**	**P112**	**BN112M4**	154
20.6	1411	0.9	69	13800	—				**VFR 130_69**	**P112**	**BN112M4**	144
20.6	1429	1.3	69	16000	—				**VFR 150_69**	**P112**	**BN112M4**	150
20.7	1369	1.3	46	15500	—				**VF 150_46**	**P132**	**BN132MA6**	148
21.1	1448	3.4	45	34500	—				**VFR 210_45**	**P132**	**BN132MA6**	162
22.2	1240	1.1	64	14700	—				**VF 150_64**	**P112**	**BN112M4**	148
23.7	1259	1.1	60	13800	—				**VFR 130_60**	**P112**	**BN112M4**	144
23.7	1275	1.5	60	16000	—				**VFR 150_60**	**P112**	**BN112M4**	150
23.7	1194	1.9	60	18000	—				**VF 185_60**	**P112**	**BN112M4**	154

Bonfiglioli Riduttori

4 kW

n_2 min-1	M_2 Nm	S	i	R_{n2} N						IEC		
23.7	1307	2.5	60	19500		—			**VFR 185_60**	**P112**	**BN112M4**	156
23.7	1291	3.6	60	34500		—			**VFR 210_60**	**P112**	**BN112M4**	162
23.8	1174	1.0	40	13200		—			**VF 130_40**	**P132**	**BN132MA6**	142
23.8	1206	3.6	40	33000		—			**VF 210_40**	**P132**	**BN132MA6**	160
25.4	1100	0.9	56	12500		—			**VF 130_56**	**P112**	**BN112M4**	142
25.4	1115	1.2	56	14700		—			**VF 150_56**	**P112**	**BN112M4**	148
28.4	1022	2.4	50	18000		—			**VF 185_50**	**P112**	**BN112M4**	154
31	940	1.1	46	12600		—			**VF 130_46**	**P112**	**BN112M4**	142
31	953	1.6	46	14700		—			**VF 150_46**	**P112**	**BN112M4**	148
32	993	1.7	45	16000		—			**VFR 150_45**	**P112**	**BN112M4**	150
32	1017	2.8	45	19500		—			**VFR 185_45**	**P112**	**BN112M4**	156
32	929	1.3	30	13200		—			**VF 130_30**	**P132**	**BN132MA6**	142
32	977	2.5	30	19000		—			**VF 185_30**	**P132**	**BN132MA6**	154
32	965	3.5	30	33000		—			**VF 210_30**	**P132**	**BN132MA6**	160
36	818	1.3	40	12600		—			**VF 130_40**	**P112**	**BN112M4**	142
36	829	1.9	40	14700		—			**VF 150_40**	**P112**	**BN112M4**	148
36	769	0.9	80	12600		—			**VF 130_80**	**P112**	**BN112M2**	142
41	749	1.4	23	13200		—			**VF 130_23**	**P132**	**BN132MA6**	142
41	758	2.0	23	13200		—			**VF 150_23**	**P132**	**BN132MA6**	148
45	641	1.1	64	12600		—			**VF 130_64**	**P112**	**BN112M2**	142
46	635	1.1	30	8000	**W 110_30**	**S3**	**M3LC4**	138	**W 110_30**	**P112**	**BN112M4**	139
47	638	1.6	30	12600		—			**VF 130_30**	**P112**	**BN112M4**	142
47	646	2.1	30	14700		—			**VF 150_30**	**P112**	**BN112M4**	148
47	686	2.2	30	16000		—			**VFR 150_30**	**P112**	**BN112M4**	150
60	525	1.0	23	8000	**W 110_23**	**S3**	**M3LC4**	138	**W 110_23**	**P112**	**BN112M4**	139
62	514	1.7	23	12600		—			**VF 130_23**	**P112**	**BN112M4**	142
62	514	2.5	23	14700		—			**VF 150_23**	**P112**	**BN112M4**	148
63	485	1.6	46	12600		—			**VF 130_46**	**P112**	**BN112M2**	142
70	462	1.2	20	8000	**W 110_20**	**S3**	**M3LC4**	138	**W 110_20**	**P112**	**BN112M4**	139
71	452	2.0	20	12400		—			**VF 130_20**	**P112**	**BN112M4**	142
93	350	0.9	15	5410	**W 86_15**	**S3**	**M3LC4**	134	**W 86_15**	**P112**	**BN112M4**	135
93	346	1.7	15	8000	**W 110_15**	**S3**	**M3LC4**	138	**W 110_15**	**P112**	**BN112M4**	139
95	347	2.7	15	11400		—			**VF 130_15**	**P112**	**BN112M4**	142
95	350	3.4	10	12700		—			**VF 150_10**	**P132**	**BN132MA6**	148
139	242	1.0	10	2160	**W 75_10**	**S3**	**M3LC4**	130	**W 75_10**	**P112**	**BN112M4**	131
139	242	1.2	10	4940	**W 86_10**	**S3**	**M3LC4**	134	**W 86_10**	**P112**	**BN112M4**	135
139	239	2.3	10	7840	**W 110_10**	**S3**	**M3LC4**	138	**W 110_10**	**P112**	**BN112M4**	139
142	237	3.3	10	10100		—			**VF 130_10**	**P112**	**BN112M4**	142
191	176	1.3	15	2400	**W 75_15**	**S3**	**M3LB2**	130	**W 75_15**	**P112**	**BN112M2**	131
191	174	1.7	15	4820	**W 86_15**	**S3**	**M3LB2**	134	**W 86_15**	**P112**	**BN112M2**	135
191	174	3.1	15	7380	**W 110_15**	**S3**	**M3LB2**	138	**W 110_15**	**P112**	**BN112M2**	139
199	173	1.1	7	1900	**W 75_7**	**S3**	**M3LC4**	130	**W 75_7**	**P112**	**BN112M4**	131
199	171	1.5	7	4490	**W 86_7**	**S3**	**M3LC4**	134	**W 86_7**	**P112**	**BN112M4**	135
199	171	2.9	7	7040	**W 110_7**	**S3**	**M3LC4**	138	**W 110_7**	**P112**	**BN112M4**	139
287	120	1.7	10	2210	**W 75_10**	**S3**	**M3LB2**	130	**W 75_10**	**P112**	**BN112M2**	131
287	120	2.2	10	4320	**W 86_10**	**S3**	**M3LB2**	134	**W 86_10**	**P112**	**BN112M2**	135
410	85	2.0	7	2010	**W 75_7**	**S3**	**M3LB2**	130	**W 75_7**	**P112**	**BN112M2**	131
410	85	2.7	7	3890	**W 86_7**	**S3**	**M3LB2**	134	**W 86_7**	**P112**	**BN112M2**	135

5.5 kW

n_2 min-1	M_2 Nm	S	i	R_{n2} N						IEC		
2.4	9630	0.9	600	52000		—			**VF/VF 130/250_600**	**P132**	**BN132S4**	170
3.4	7937	1.2	280	52000		—			**VF/VF 130/250_280**	**P132**	**BN132MB6**	170
3.6	7295	0.9	400	34500		—			**VF/VF 130/210_400**	**P132**	**BN132S4**	164
3.6	7149	1.3	400	52000		—			**VF/VF 130/250_400**	**P132**	**BN132S4**	170
5.1	5311	1.2	280	34500		—			**VF/VF 130/210_280**	**P132**	**BN132S4**	164
5.1	5413	1.7	280	52000		—			**VF/VF 130/250_280**	**P132**	**BN132S4**	170
5.3	6203	1.1	180	52000		—			**VFR 250_180**	**P132**	**BN132MB6**	168
6.3	5169	1.0	150	34500		—			**VFR 210_150**	**P132**	**BN132MB6**	162
6.3	5253	1.3	150	52000		—			**VFR 250_150**	**P132**	**BN132MB6**	168

5.5 kW

n_2 min-1	M_2 Nm	S	i	R_{n2} N				IEC		
8.0	4202	1.0	180	34500	—		**VFR 210_180**	**P132**	**BN132S4**	162
8.0	4399	1.4	180	52000	—		**VFR 250_180**	**P132**	**BN132S4**	168
9.5	3391	0.9	100	33000	—		**VF 210_100**	**P132**	**BN132MB6**	160
9.5	3502	1.4	100	50000	—		**VF 250_100**	**P132**	**BN132MB6**	166
9.6	3666	1.2	150	34500	—		**VFR 210_150**	**P132**	**BN132S4**	162
9.6	3666	1.8	150	52000	—		**VFR 250_150**	**P132**	**BN132S4**	168
11.8	2890	1.1	80	33000	—		**VF 210_80**	**P132**	**BN132MB6**	160
11.8	2979	1.7	80	50000	—		**VF 250_80**	**P132**	**BN132MB6**	166
12.0	3064	1.6	120	34500	—		**VFR 210_120**	**P132**	**BN132S4**	162
12.0	3108	2.3	120	52000	—		**VFR 250_120**	**P132**	**BN132S4**	168
14.4	2371	1.1	100	31500	—		**VF 210_100**	**P132**	**BN132S4**	160
14.4	2590	1.4	100	19500	—		**VFR 185_100**	**P132**	**BN132S4**	156
14.4	2480	1.5	100	47000	—		**VF 250_100**	**P132**	**BN132S4**	166
15.8	2368	1.1	60	19000	—		**VF 185_60**	**P132**	**BN132MB6**	154
15.8	2334	1.6	60	33000	—		**VF 210_60**	**P132**	**BN132MB6**	160
15.8	2401	2.3	60	50000	—		**VF 250_60**	**P132**	**BN132MB6**	166
16.0	2495	1.6	90	34500	—		**VFR 210_90**	**P132**	**BN132S4**	162
16.0	2561	2.3	90	52000	—		**VFR 250_90**	**P132**	**BN132S4**	168
18.0	2013	1.1	80	18000	—		**VF 185_80**	**P132**	**BN132S4**	154
18.0	2013	1.4	80	31500	—		**VF 210_80**	**P132**	**BN132S4**	160
18.0	2072	1.9	80	47000	—		**VF 250_80**	**P132**	**BN132S4**	166
19.2	2106	1.3	75	19500	—		**VFR 185_75**	**P132**	**BN132S4**	156
20.5	1892	0.9	46	15500	—		**VF 150_46**	**P132**	**BN132MB6**	148
21.0	2001	2.4	45	34500	—		**VFR 210_45**	**P132**	**BN132MB6**	162
21.0	2051	3.3	45	52000	—		**VFR 250_45**	**P132**	**BN132MB6**	168
23.6	1645	1.1	40	15500	—		**VF 150_40**	**P132**	**BN132MB6**	148
24.0	1620	1.4	60	18000	—		**VF 185_60**	**P132**	**BN132S4**	154
24.0	1598	1.9	60	31500	—		**VF 210_60**	**P132**	**BN132S4**	160
24.0	1751	2.7	60	34500	—		**VFR 210_60**	**P132**	**BN132S4**	162
24.0	1663	2.7	60	47000	—		**VF 250_60**	**P132**	**BN132S4**	166
24.0	1773	4.0	60	52000	—		**VFR 250_60**	**P132**	**BN132S4**	168
28.8	1430	1.3	50	15940	—		**VFR 150_50**	**P132**	**BN132S4**	150
28.8	1386	1.8	50	18000	—		**VF 185_50**	**P132**	**BN132S4**	154
28.8	1477	2.2	50	19500	—		**VFR 185_50**	**P132**	**BN132S4**	156
28.8	1386	2.4	50	31500	—		**VF 210_50**	**P132**	**BN132S4**	160
28.8	1386	3.2	50	47000	—		**VF 250_50**	**P132**	**BN132S4**	166
31	1292	1.2	46	14700	—		**VF 150_46**	**P132**	**BN132S4**	148
32	1284	1.0	30	13200	—		**VF 130_30**	**P132**	**BN132MB6**	142
32	1362	3.0	45	34500	—		**VFR 210_45**	**P132**	**BN132S4**	162
36	1109	1.0	40	12600	—		**VF 130_40**	**P132**	**BN132S4**	142
36	1123	1.4	40	14700	—		**VF 150_40**	**P132**	**BN132S4**	148
36	1138	2.3	40	18000	—		**VF 185_40**	**P132**	**BN132S4**	154
36	1138	3.1	40	31500	—		**VF 210_40**	**P132**	**BN132S4**	160
38	1101	1.5	37.5	15400	—		**VFR 150_37.5**	**P132**	**BN132S4**	150
38	1149	2.4	37.5	19500	—		**VFR 185_37.5**	**P132**	**BN132S4**	156
41	1035	1.0	23	13000	—		**VF 130_23**	**P132**	**BN132MB6**	142
41	1048	1.4	23	15300	—		**VF 150_23**	**P132**	**BN132MB6**	148
48	864	1.2	30	12600	—		**VF 130_30**	**P132**	**BN132S4**	142
48	875	1.6	30	14700	—		**VF 150_30**	**P132**	**BN132S4**	148
48	908	2.2	30	18000	—		**VF 185_30**	**P132**	**BN132S4**	154
48	908	3.4	30	31500	—		**VF 210_30**	**P132**	**BN132S4**	160
58	775	1.9	25	13400	—		**VFR 150_25**	**P132**	**BN132S4**	150
58	784	3.3	25	19500	—		**VFR 185_25**	**P132**	**BN132S4**	156
63	696	1.3	23	12100	—		**VF 130_23**	**P132**	**BN132S4**	142
63	696	1.8	23	14000	—		**VF 150_23**	**P132**	**BN132S4**	148
63	692	0.9	15	8000	—		**W 110_15**	**P132**	**BN132MB6**	139
72	613	0.9	20	8000	—		**W 110_20**	**P132**	**BN132S4**	139
72	613	1.5	20	11700	—		**VF 130_20**	**P132**	**BN132S4**	142
72	613	2.1	20	13500	—		**VF 150_20**	**P132**	**BN132S4**	148
96	460	1.3	15	8000	—		**W 110_15**	**P132**	**BN132S4**	139
96	471	2.0	15	12800	—		**VF 130_15**	**P132**	**BN132S4**	142
96	476	2.4	15	12400	—		**VF 150_15**	**P132**	**BN132S4**	148
126	359	1.9	23	10400	—		**VF 130_23**	**P132**	**BN132SA2**	142
126	359	2.7	23	11800	—		**VF 150_23**	**P132**	**BN132SA2**	148
144	317	1.7	10	7330	—		**W 110_10**	**P132**	**BN132S4**	139

Bonfiglioli Riduttori

5.5 kW

n_2 min-1	M_2 Nm	S	i	R_{n2} N				IEC		
144	321	2.5	10	9680	—		VF 130_10	P132	BN132S4	142
144	321	3.3	10	11000	—		VF 150_10	P132	BN132S4	148
193	237	2.3	15	7060	—		W 110_15	P132	BN132SA2	139
206	227	2.2	7	6600	—		W 110_7	P132	BN132S4	139
206	227	3.3	7	8650	—		VF 130_7	P132	BN132S4	142
289	162	3.0	10	6290	—		W 110_10	P132	BN132SA2	139
289	164	3.6	10	8110	—		VF 130_10	P132	BN132SA2	142
413	115	3.9	7	5640	—		W 110_7	P132	BN132SA2	139
413	116	4.8	7	7230	—		VF 130_7	P132	BN132SA2	142

7.5 kW

n_2 min-1	M_2 Nm	S	i	R_{n2} N				IEC		
3.6	9749	0.9	400	52000	—		VF/VF 130/250_400	P132	BN132MA4	170
5.1	7242	0.9	280	34500	—		VF/VF 130/210_280	P132	BN132MA4	164
5.1	7381	1.2	280	52000	—		VF/VF 130/250_280	P132	BN132MA4	170
6.4	7088	1.0	150	52000	—		VFR 250_150	P160	BN160M6	168
8.0	5940	1.0	120	34500	—		VFR 210_120	P160	BN160M6	162
8.0	5999	1.1	180	52000	—		VFR 250_180	P132	BN132MA4	168
9.6	4725	1.0	100	50000	—		VF 250_100	P160	BN160M6	166
9.6	4999	1.3	150	52000	—		VFR 250_150	P132	BN132MA4	168
10.6	4860	0.9	90	34500	—		VFR 210_90	P160	BN160M6	162
11.9	4020	1.3	80	50000	—		VF 250_80	P160	BN160M6	166
12.0	4178	1.2	120	34500	—		VFR 210_120	P132	BN132MA4	162
12.0	4238	1.7	120	52000	—		VFR 250_120	P132	BN132MA4	168
14.4	3532	1.0	100	19500	—		VFR 185_100	P132	BN132MA4	156
14.4	3382	1.1	100	47000	—		VF 250_100	P132	BN132MA4	166
15.9	3150	1.2	60	33000	—		VF 210_60	P160	BN160M6	160
16.0	3402	1.2	90	34500	—		VFR 210_90	P132	BN132MA4	162
16.0	3492	1.7	90	52000	—		VFR 250_90	P132	BN132MA4	168
18.0	2746	1.1	80	31500	—		VF 210_80	P132	BN132MA4	160
18.0	2825	1.4	80	47000	—		VF 250_80	P132	BN132MA4	166
19.2	2872	1.0	75	19500	—		VFR 185_75	P132	BN132MA4	156
21.2	2700	1.8	45	34500	—		VFR 210_45	P160	BN160M6	162
21.2	2768	2.5	45	52000	—		VFR 250_45	P160	BN160M6	168
24.0	2208	1.0	60	18000	—		VF 185_60	P132	BN132MA4	154
24.0	2179	1.4	60	31500	—		VF 210_60	P132	BN132MA4	160
24.0	2388	2.0	60	31500	—		VFR 210_60	P132	BN132MA4	162
24.0	2268	2.0	60	47000	—		VF 250_60	P132	BN132MA4	166
24.0	2417	2.9	60	52000	—		VFR 250_60	P132	BN132MA4	168
28.8	1950	1.0	50	14100	—		VFR 150_50	P132	BN132MA4	150
28.8	1890	1.3	50	18000	—		VF 185_50	P132	BN132MA4	154
28.8	2014	1.6	50	19500	—		VFR 185_50	P132	BN132MA4	156
28.8	1890	1.7	50	31500	—		VF 210_50	P132	BN132MA4	160
28.8	1890	2.4	50	47000	—		VF 250_50	P132	BN132MA4	166
31	1762	0.9	46	14700	—		VF 150_46	P132	BN132MA4	148
32	1858	2.2	45	34500	—		VFR 210_45	P132	BN132MA4	162
32	1880	3.4	45	48800	—		VFR 250_45	P132	BN132MA4	168
36	1532	1.0	40	14700	—		VF 150_40	P132	BN132MA4	148
36	1552	1.7	40	18000	—		VF 185_40	P132	BN132MA4	154
36	1552	2.3	40	31500	—		VF 210_40	P132	BN132MA4	160
36	1572	3.1	40	47000	—		VF 250_40	P132	BN132MA4	166
38	1501	1.1	37.5	13200	—		VFR 150_37.5	P132	BN132MA4	150
38	1567	1.8	37.5	18300	—		VFR 185_37.5	P132	BN132MA4	156
48	1179	0.9	30	11900	—		VF 130_30	P132	BN132MA4	142
48	1194	1.1	30	14200	—		VF 150_30	P132	BN132MA4	148
48	1239	1.6	30	18000	—		VF 185_30	P132	BN132MA4	154
48	1239	2.5	30	31500	—		VF 210_30	P132	BN132MA4	160
48	1283	3.0	30	33400	—		VFR 210_30	P132	BN132MA4	162
48	1253	3.2	30	4440	—		VF 250_30	P132	BN132MA4	166
58	1057	1.4	25	11000	—		VFR 150_25	P132	BN132MA4	150

7.5 kW

n_2 min^{-1}	M_2 Nm	S	i	R_{n2} N				IEC		
58	1069	2.4	25	16700	—		VFR 185_25	P132	BN132MA4	156
63	950	0.9	23	11200	—		VF 130_23	P132	BN132MA4	142
63	950	1.3	23	13200	—		VF 150_23	P132	BN132MA4	148
64	968	2.3	15	16700	—		VF 185_15	P160	BN160M6	154
64	968	3.4	15	31500	—		VF 210_15	P160	BN160M6	160
72	836	1.1	20	10800	—		VF 130_20	P132	BN132MA4	142
72	836	1.6	20	12700	—		VF 150_20	P132	BN132MA4	148
96	627	1.0	15	7370	—		W 110_15	P132	BN132MA4	139
96	642	1.4	15	10200	—		VF 130_15	P132	BN132MA4	142
96	649	1.8	15	11700	—		VF 150_15	P132	BN132MA4	148
126	489	1.4	23	9900	—		VF 130_23	P132	BN132SB2	142
126	489	2.0	23	11400	—		VF 150_23	P132	BN132SB2	148
136	467	2.5	7	10200	—		VF 150_7	P160	BN160M6	148
144	433	1.3	10	6720	—		W 110_10	P132	BN132MA4	139
144	438	1.8	10	9150	—		VF 130_10	P132	BN132MA4	142
144	438	2.4	10	10500	—		VF 150_10	P132	BN132MA4	148
193	322	1.7	15	6660	—		W 110_15	P132	BN132SB2	139
206	310	1.6	7	6100	—		W 110_7	P132	BN132MA4	139
206	310	2.4	7	8210	—		VF 130_7	P132	BN132MA4	142
206	313	3.2	7	9400	—		VF 150_7	P132	BN132MA4	148
290	220	2.2	10	5980	—		W 110_10	P132	BN132SB2	139
290	222	2.7	10	7840	—		VF 130_10	P132	BN132SB2	142
414	156	2.9	7	5380	—		W 110_7	P132	BN132SB2	139
414	157	3.5	7	7010	—		VF 130_7	P132	BN132SB2	142

9.2 kW

n_2 min^{-1}	M_2 Nm	S	i	R_{n2} N				IEC		
5.1	9054	1.0	280	52000	—		VF/VF 130/250_280	P132	BN132MB4	170
9.6	6132	1.1	150	52000	—		VFR 250_150	P132	BN132MB4	168
12.0	5198	1.3	120	52000	—		VFR 250_120	P132	BN132MB4	168
14.4	4149	0.9	100	47000	—		VF 250_100	P132	BN132MB4	166
16.0	4173	1.0	90	34500	—		VFR 210_90	P132	BN132MB4	162
16.0	4283	1.4	90	52000	—		VFR 250_90	P132	BN132MB4	168
18.0	3368	0.9	80	31500	—		VF 210_80	P132	BN132MB4	160
18.0	3466	1.1	80	47000	—		VF 250_80	P132	BN132MB4	166
24.0	2672	1.1	60	31500	—		VF 210_60	P132	BN132MB4	160
24.0	2929	1.6	60	34500	—		VFR 210_60	P132	BN132MB4	162
24.0	2782	1.6	60	47000	—		VF 250_60	P132	BN132MB4	166
24.0	2965	2.4	60	51900	—		VFR 250_60	P132	BN132MB4	168
28.8	2319	1.1	50	18000	—		VF 185_50	P132	BN132MB4	154
28.8	2471	1.3	50	18600	—		VFR 185_50	P132	BN132MB4	156
28.8	2319	1.4	50	31500	—		VF 210_50	P132	BN132MB4	160
28.8	2319	1.9	50	47000	—		VF 250_50	P132	BN132MB4	166
32	2279	1.8	45	34500	—		VFR 210_45	P132	BN132MB4	162
32	2306	2.8	45	48000	—		VFR 250_45	P132	BN132MB4	168
36	1904	1.4	40	18000	—		VF 185_40	P132	BN132MB4	154
36	1904	1.8	40	31500	—		VF 210_40	P132	BN132MB4	160
36	1928	2.5	40	47000	—		VF 250_40	P132	BN132MB4	166
38	1884	0.9	37.5	11900	—		VFR 150_37.5	P132	BN132MB4	150
38	1922	1.5	37.5	17200	—		VFR 185_37.5	P132	BN132MB4	156
48	1464	0.9	30	11300	—		VF 150_30	P132	BN132MB4	148
48	1519	1.3	30	17900	—		VF 185_30	P132	BN132MB4	154
48	1519	2.0	30	31500	—		VF 210_30	P132	BN132MB4	160
48	1574	2.4	30	32600	—		VFR 210_30	P132	BN132MB4	162
48	1538	2.6	30	43900	—		VF 250_30	P132	BN132MB4	166
48	1574	3.8	30	42800	—		VFR 250_30	P132	BN132MB4	168
58	1297	1.2	25	11200	—		VFR 150_25	P132	BN132MB4	150
58	1312	2.0	25	15800	—		VFR 185_25	P132	BN132MB4	156
63	1165	1.1	23	12500	—		VF 150_23	P132	BN132MB4	148
72	1025	0.9	20	10100	—		VF 130_20	P132	BN132MB4	142

Bonfiglioli Riduttori

9.2 kW

n_2 min-1	M_2 Nm	S	i	R_{n2} N				IEC		
72	1025	1.3	20	12100	—		**VF 150_20**	**P132**	**BN132MB4**	148
72	1037	3.0	20	30400	—		**VF 210_20**	**P132**	**BN132MB4**	160
96	787	1.2	15	9560	—		**VF 130_15**	**P132**	**BN132MB4**	142
96	796	1.4	15	11200	—		**VF 150_15**	**P132**	**BN132MB4**	148
126	599	1.1	23	9510	—		**VF 130_23**	**P132**	**BN132M2**	142
126	599	1.6	23	11000	—		**VF 150_23**	**P132**	**BN132M2**	148
144	531	1.0	10	6210	—		**W 110_10**	**P132**	**BN132MB4**	139
144	537	1.5	10	8690	—		**VF 130_10**	**P132**	**BN132MB4**	142
144	537	2.0	10	16100	—		**VF 150_10**	**P132**	**BN132MB4**	148
193	395	1.4	15	6320	—		**W 110_15**	**P132**	**BN132M2**	139
206	380	1.3	7	5670	—		**W 110_7**	**P132**	**BN132MB4**	139
206	380	1.9	7	7820	—		**VF 130_7**	**P132**	**BN132MB4**	142
206	384	2.6	7	9030	—		**VF 150_7**	**P132**	**BN132MB4**	148
290	270	1.8	10	5720	—		**W 110_10**	**P132**	**BN132M2**	139
290	273	2.2	10	7620	—		**VF 130_10**	**P132**	**BN132M2**	142
290	273	2.9	10	8690	—		**VF 150_10**	**P132**	**BN132M2**	148
414	191	2.3	7	5170	—		**W 110_7**	**P132**	**BN132M2**	139
414	193	2.9	7	6820	—		**VF 130_7**	**P132**	**BN132M2**	142

11 kW

n_2 min-1	M_2 Nm	S	i	R_{n2} N				IEC		
8.0	8798	0.9	120	52000	—		**VFR 250_120**	**P160**	**BN160L6**	168
10.7	7288	0.9	90	52000	—		**VFR 250_90**	**P160**	**BN160L6**	168
12.0	5865	0.9	80	50000	—		**VF 250_80**	**P160**	**BN160L6**	166
12.0	6215	1.1	120	52000	—		**VFR 250_120**	**P160**	**BN160MR4**	168
16.0	5056	1.1	60	34500	—		**VFR 210_60**	**P160**	**BN160L6**	162
16.0	5121	1.2	90	52000	—		**VFR 250_90**	**P160**	**BN160MR4**	168
16.0	4727	1.2	60	50000	—		**VF 250_60**	**P160**	**BN160L6**	166
18.0	4144	0.9	80	47000	—		**VF 250_80**	**P160**	**BN160MR4**	166
19.2	3939	1.0	50	33000	—		**VF 210_50**	**P160**	**BN160L6**	160
21.3	3939	1.2	45	34500	—		**VFR 210_45**	**P160**	**BN160L6**	162
21.3	4038	1.7	45	51300	—		**VFR 250_45**	**P160**	**BN160L6**	168
24.0	3327	0.9	40	18000	—		**VF 185_40**	**P160**	**BN160L6**	154
24.0	3195	0.9	60	31500	—		**VF 210_60**	**P160**	**BN160MR4**	160
24.0	3283	1.3	40	33000	—		**VF 210_40**	**P160**	**BN160L6**	160
24.0	3502	1.3	60	34500	—		**VFR 210_60**	**P160**	**BN160MR4**	162
24.0	3327	1.4	60	47000	—		**VF 250_60**	**P160**	**BN160MR4**	166
24.0	3327	2.0	40	50000	—		**VF 250_40**	**P160**	**BN160L6**	166
24.0	3545	2.0	60	50900	—		**VFR 250_60**	**P160**	**BN160MR4**	168
28.8	2772	1.2	50	31500	—		**VF 210_50**	**P160**	**BN160MR4**	160
28.8	2772	1.6	50	47000	—		**VF 250_50**	**P160**	**BN160MR4**	166
32	2659	0.9	30	18100	—		**VF 185_30**	**P160**	**BN160L6**	154
32	2725	1.5	45	34500	—		**VFR 210_45**	**P160**	**BN160MR4**	162
32	2758	2.3	45	47100	—		**VFR 250_45**	**P160**	**BN160MR4**	168
36	2276	1.2	40	18500	—		**VF 185_40**	**P160**	**BN160MR4**	154
36	2276	1.5	40	31500	—		**VF 210_40**	**P160**	**BN160MR4**	160
36	2305	2.1	40	47000	—		**VF 250_40**	**P160**	**BN160MR4**	166
48	1816	1.1	30	17200	—		**VF 185_30**	**P160**	**BN160MR4**	154
48	1816	1.7	30	31500	—		**VF 210_30**	**P160**	**BN160MR4**	160
48	1882	2.0	30	31800	—		**VFR 210_30**	**P160**	**BN160MR4**	162
48	1838	2.2	30	43400	—		**VF 250_30**	**P160**	**BN160MR4**	166
48	1882	3.2	30	42100	—		**VFR 250_30**	**P160**	**BN160MR4**	168
48	1860	3.2	20	43100	—		**VF 250_20**	**P160**	**BN160L6**	166
64	1395	1.0	15	10900	—		**VF 150_15**	**P160**	**BN160L6**	148
64	1412	1.6	15	15300	—		**VF 185_15**	**P160**	**BN160L6**	154
64	1412	2.3	15	30500	—		**VF 210_15**	**P160**	**BN160L6**	160
72	1226	1.1	20	11400	—		**VF 150_20**	**P160**	**BN160MR4**	148
72	1240	1.8	20	15600	—		**VF 185_20**	**P160**	**BN160MR4**	154
72	1240	2.5	20	30000	—		**VF 210_20**	**P160**	**BN160MR4**	160
96	952	1.2	15	10600	—		**VF 150_15**	**P160**	**BN160MR4**	148

11 kW

n_2 min-1	M_2 Nm	S	i	R_{n2} N				IEC		
96	963	1.9	15	14200	—		VF 185_15	P160	BN160MR4	154
96	963	3.0	15	27700	—		VF 210_15	P160	BN160MR4	160
144	642	1.6	10	9670	—		VF 150_10	P160	BN160MR4	148
146	635	2.7	20	13300	—		VF 185_20	P160	BN160MR2	154
194	482	2.9	15	12200	—		VF 185_15	P160	BN160MR2	154
206	460	2.2	7	8660	—		VF 150_7	P160	BN160MR4	148
291	325	2.4	10	8440	—		VF 150_10	P160	BN160MR2	148
416	230	3.3	7	7530	—		VF 150_7	P160	BN160MR2	148

15 kW

n_2 min-1	M_2 Nm	S	i	R_{n2} N				IEC		
16.2	6380	0.9	60	50000	—		VF 250_60	P180	BN180L6	166
19.4	5390	1.2	50	50000	—		VF 250_50	P180	BN180L6	166
24.3	4430	1.0	40	33000	—		VF 210_40	P180	BN180L6	160
24.3	4489	1.4	40	50000	—		VF 250_40	P180	BN180L6	166
24.3	4474	1.0	60	47000	—		VF 250_60	P160	BN160L4	166
24.3	4768	1.5	60	48700	—		VFR 250_60	P160	BN160L4	168
29.2	3728	0.9	50	31500	—		VF 210_50	P160	BN160L4	160
29.2	3728	1.2	50	47000	—		VF 250_50	P160	BN160L4	166
32	3665	1.1	45	33200	—		VFR 210_45	P160	BN160L4	162
32	3709	1.7	45	45200	—		VFR 250_45	P160	BN160L4	168
37	3061	0.9	40	16600	—		VF 185_40	P160	BN160L4	154
37	3061	1.1	40	31500	—		VF 210_40	P160	BN160L4	160
37	3100	1.5	40	45900	—		VF 250_40	P160	BN160L4	166
49	2481	1.1	20	14800	—		VF 185_20	P180	BN180L6	154
49	2443	1.2	30	31500	—		VF 210_30	P160	BN160L4	160
49	2531	1.5	30	30000	—		VFR 210_30	P160	BN160L4	162
49	2473	1.6	30	42400	—		VF 250_30	P160	BN160L4	166
49	2531	2.4	30	40600	—		VFR 250_30	P160	BN160L4	168
65	1905	1.2	15	13600	—		VF 185_15	P180	BN180L6	154
65	1905	1.7	15	29300	—		VF 210_15	P180	BN180L6	160
65	1927	2.8	15	38700	—		VF 250_15	P180	BN180L6	166
73	1668	1.4	20	14300	—		VF 185_20	P160	BN160L4	154
73	1668	1.9	20	29100	—		VF 210_20	P160	BN160L4	160
73	1688	2.6	20	38100	—		VF 250_20	P160	BN160L4	166
97	1280	0.9	15	9360	—		VF 150_15	P160	BN160L4	148
97	1295	1.4	15	13200	—		VF 185_15	P160	BN160L4	154
97	1295	2.2	15	27000	—		VF 210_15	P160	BN160L4	160
97	1295	3.1	15	35100	—		VF 250_15	P160	BN160L4	166
139	920	2.2	7	11400	—		VF 185_7	P180	BN180L6	154
146	863	1.2	10	8720	—		VF 150_10	P160	BN160L4	148
146	873	3.0	10	24000	—		VF 210_10	P160	BN160L4	160
147	860	2.0	20	12700	—		VF 185_20	P160	BN160MB2	154
195	653	2.1	15	11600	—		VF 185_15	P160	BN160MB2	154
195	653	3.3	15	22700	—		VF 210_15	P160	BN160MB2	160
209	618	1.6	7	7840	—		VF 150_7	P160	BN160L4	148
293	440	1.8	10	7960	—		VF 150_10	P160	BN160MB2	148
419	311	2.4	7	7120	—		VF 150_7	P160	BN160MB2	148

18.5 kW

n_2 min-1	M_2 Nm	S	i	R_{n2} N				IEC		
19.2	6717	0.9	50	50000	—		VF 250_50	P200	BN200LA6	166
24.0	5595	1.2	40	48700	—		VF 250_40	P200	BN200LA6	166
29.2	4598	1.0	50	47000	—		VF 250_50	P180	BN180M4	166
32	4472	1.2	30	45200	—		VF 250_30	P200	BN200LA6	166

Bonfiglioli Riduttori

18.5 kW

n_2 min-1	M_2 Nm	S	i	R_{n2} N				IEC		
37	3776	0.9	40	31500	—		**VF 210_40**	**P180**	**BN180M4**	160
37	3824	1.3	40	44900	—		**VF 250_40**	**P180**	**BN180M4**	166
49	3013	1.0	30	31200	—		**VF 210_30**	**P180**	**BN180M4**	160
49	3049	1.3	30	41500	—		**VF 250_30**	**P180**	**BN180M4**	166
64	2374	1.4	15	28300	—		**VF 210_15**	**P200**	**BN200LA6**	160
64	2402	2.2	15	37800	—		**VF 250_15**	**P200**	**BN200LA6**	166
73	2057	1.1	20	13200	—		**VF 185_20**	**P180**	**BN180M4**	154
73	2057	1.5	20	28300	—		**VF 210_20**	**P180**	**BN180M4**	160
73	2081	2.1	20	37400	—		**VF 250_20**	**P180**	**BN180M4**	166
97	1597	1.2	15	12200	—		**VF 185_15**	**P180**	**BN180M4**	154
97	1597	1.8	15	26200	—		**VF 210_15**	**P180**	**BN180M4**	160
97	1597	2.5	15	34500	—		**VF 250_15**	**P180**	**BN180M4**	166
146	1077	1.7	10	11400	—		**VF 185_10**	**P180**	**BN180M4**	154
146	1077	2.5	10	23400	—		**VF 210_10**	**P180**	**BN180M4**	160
146	1089	3.4	10	37800	—		**VF 250_10**	**P180**	**BN180M4**	166
195	805	1.1	15	8260	—		**VF 150_15**	**P160**	**BN160L2**	148
209	762	2.3	7	10100	—		**VF 185_7**	**P180**	**BN180M4**	154
209	762	3.0	7	21200	—		**VF 210_7**	**P180**	**BN180M4**	160
293	543	1.5	10	7550	—		**VF 150_10**	**P160**	**BN160L2**	148
419	384	2.0	7	6760	—		**VF 150_7**	**P160**	**BN160L2**	148

22 kW

n_2 min-1	M_2 Nm	S	i	R_{n2} N				IEC		
22.5	7097	0.9	40	47100	—		**VF 250_40**	**P200**	**BN200L6**	166
30	5673	1.0	30	43900	—		**VF 250_30**	**P200**	**BN200L6**	166
37	4532	1.1	40	43900	—		**VF 250_40**	**P180**	**BN180L4**	166
49	3571	0.9	30	30200	—		**VF 210_30**	**P180**	**BN180L4**	160
49	3614	1.1	30	44700	—		**VF 250_30**	**P180**	**BN180L4**	166
60	3011	1.1	15	27200	—		**VF 210_15**	**P200**	**BN200L6**	160
60	3046	1.7	15	36900	—		**VF 250_15**	**P200**	**BN200L6**	166
73	2438	0.9	20	12200	—		**VF 185_20**	**P180**	**BN180L4**	154
73	2438	1.3	20	27500	—		**VF 210_20**	**P180**	**BN180L4**	160
73	2467	1.8	20	36700	—		**VF 250_20**	**P180**	**BN180L4**	166
98	1893	1.0	15	11300	—		**VF 185_15**	**P180**	**BN180L4**	154
98	1893	1.5	15	25500	—		**VF 210_15**	**P180**	**BN180L4**	160
98	1893	2.1	15	33900	—		**VF 250_15**	**P180**	**BN180L4**	166
147	1276	1.4	10	10700	—		**VF 185_10**	**P180**	**BN180L4**	154
147	1276	2.1	10	22900	—		**VF 210_10**	**P180**	**BN180L4**	160
147	1291	2.9	10	30300	—		**VF 250_10**	**P180**	**BN180L4**	166
209	904	1.9	7	9510	—		**VF 185_7**	**P180**	**BN180L4**	154
209	904	2.5	7	20800	—		**VF 210_7**	**P180**	**BN180L4**	160
209	914	3.5	7	27500	—		**VF 250_7**	**P180**	**BN180L4**	166
293	645	2.1	10	9730	—		**VF 185_10**	**P180**	**BN180M2**	154
293	645	3.1	10	23900	—		**VF 210_10**	**P180**	**BN180M2**	160
419	457	2.9	7	8660	—		**VF 185_7**	**P180**	**BN180M2**	154

30 kW

n_2 min-1	M_2 Nm	S	i	R_{n2} N				IEC		
45	5412	1.1	20	37600	—		**VF 250_20**	**P225**	**BN225M6**	166
60	4154	1.3	15	35000	—		**VF 250_15**	**P225**	**BN225M6**	166
74	3313	0.9	20	25800	—		**VF 210_20**	**P200**	**BN200L4**	160
74	3352	1.3	20	35200	—		**VF 250_20**	**P200**	**BN200L4**	166
98	2573	1.1	15	24000	—		**VF 210_15**	**P200**	**BN200L4**	160
98	2573	1.6	15	32600	—		**VF 250_15**	**P200**	**BN200L4**	166
147	1735	1.5	10	21600	—		**VF 210_10**	**P200**	**BN200L4**	160

30 kW

n_2 min^{-1}	M_2 Nm	S	i	R_{n2} N				IEC		
147	1754	2.1	10	29200	—		**VF 250_10**	**P200**	**BN200L4**	166
210	1228	1.9	7	19700	—		**VF 210_7**	**P200**	**BN200L4**	160
210	1242	2.6	7	26600	—		**VF 250_7**	**P200**	**BN200L4**	166
295	874	2.3	10	19000	—		**VF 210_10**	**P200**	**BN200LA2**	160
421	619	2.8	7	17200	—		**VF 210_7**	**P200**	**BN200LA2**	160

37 kW

n_2 min^{-1}	M_2 Nm	S	i	R_{n2} N				IEC		
74	4107	1.1	20	22800	—		**VF 250_20**	**P225**	**BN225S4**	166
99	3152	0.9	15	22600	—		**VF 210_15**	**P225**	**BN225S4**	160
99	3152	1.3	15	31400	—		**VF 250_15**	**P225**	**BN225S4**	166
148	2125	1.2	10	20500	—		**VF 210_10**	**P225**	**BN225S4**	160
148	2149	1.7	10	28300	—		**VF 250_10**	**P225**	**BN225S4**	166
211	1504	1.5	7	18800	—		**VF 210_7**	**P225**	**BN225S4**	160
211	1521	2.1	7	25800	—		**VF 250_7**	**P225**	**BN225S4**	166
296	1074	1.9	10	18400	—		**VF 210_10**	**P200**	**BN200L2**	160
296	1086	2.6	10	24500	—		**VF 250_10**	**P200**	**BN200L2**	166
423	760	2.3	7	16800	—		**VF 210_7**	**P200**	**BN200L2**	160

45 kW

n_2 min^{-1}	M_2 Nm	S	i	R_{n2} N				IEC		
74	4994	0.9	20	32300	—		**VF 250_20**	**P225**	**BN225M4**	166
99	3833	1.0	15	30100	—		**VF 250_15**	**P225**	**BN225M4**	166
148	2584	1.0	10	19200	—		**VF 210_10**	**P225**	**BN225M4**	160
148	2613	1.4	10	27300	—		**VF 250_10**	**P225**	**BN225M4**	166
211	1829	1.3	7	17800	—		**VF 210_7**	**P225**	**BN225M4**	160
211	1850	1.7	7	25000	—		**VF 250_7**	**P225**	**BN225M4**	166
296	1307	1.5	10	17800	—		**VF 210_10**	**P200**	**BN225M2**	160
296	1321	2.1	10	24000	—		**VF 250_10**	**P200**	**BN225M2**	166
423	925	1.9	7	16200	—		**VF 210_7**	**P200**	**BN225M2**	160
423	935	2.6	7	21800	—		**VF 250_7**	**P200**	**BN225M2**	166

VF 27

13 Nm

		i	η_s %	n_2 min^{-1}	M_{n2} Nm	P_{n1} kW	R_{n1} N	R_{n2} N	η_d %	n_2 min^{-1}	M_{n2} Nm	P_{n1} kW	R_{n1} N	R_{n2} N	η_d %	
				n_1 = 2800 min^{-1}						n_1 = 1400 min^{-1}						
VF 27	VF 27_7	7	67	400	7	0.34	—	330	86	200	9	0.23	35	410	83	171
	VF 27_10	10	62	280	7	0.24	—	400	84	140	9	0.16	30	500	80	
	VF 27_15	15	54	187	7	0.17	—	480	79	93	9	0.12	—	600	75	
	VF 27_20	20	49	140	7	0.14	—	540	76	70	9	0.09	—	600	71	
	VF 27_30	30	38	93	7	0.10	—	600	69	47	9	0.07	—	600	62	
	VF 27_40	40	33	70	7	0.08	—	600	64	35	9	0.06	—	600	57	
	VF 27_60	60	26	47	7	0.06	—	600	56	23.3	9	0.04	—	600	49	
	VF 27_70	70	24	40	7	0.06	—	600	53	20.0	9	0.04	—	600	45	
				n_1 = 900 min^{-1}						n_1 = 500 min^{-1}						
	VF 27_7	7	67	129	10	0.17	90	480	81	71	11	0.11	90	600	79	171
	VF 27_10	10	62	90	11	0.13	20	570	78	50	12	0.08	90	600	76	
	VF 27_15	15	54	60	11	0.09	—	600	72	33	12	0.06	90	600	69	
	VF 27_20	20	49	45	11	0.08	—	600	68	25.0	12	0.05	90	600	65	
	VF 27_30	30	38	30.0	11	0.06	—	600	59	16.7	13	0.04	—	600	55	
	VF 27_40	40	33	22.5	11	0.05	—	600	54	12.5	13	0.04	—	600	50	
	VF 27_60	60	26	15.0	11	0.04	—	600	45	8.3	12	0.02	—	600	41	
	VF 27_70	70	24	12.9	10	0.03	—	600	42	7.1	11	0.02	—	600	38	

VF 30

24 Nm

		i	η_s %	n_2 min^{-1}	M_{n2} Nm	P_{n1} kW	R_{n1} N	R_{n2} N	η_d %	n_2 min^{-1}	M_{n2} Nm	P_{n1} kW	R_{n1} N	R_{n2} N	η_d %	
				n_1 = 2800 min^{-1}						n_1 = 1400 min^{-1}						
VF 30	VF 30_7	7	69	400	12	0.58	120	510	87	200	16	0.41	140	630	84	171
	VF 30_10	10	64	280	12	0.41	70	620	85	140	16	0.30	80	770	81	
	VF 30_15	15	56	187	14	0.34	—	720	81	93	18	0.24	—	910	76	
	VF 30_20	20	51	140	14	0.26	—	820	78	70	18	0.19	—	1030	73	
	VF 30_30	30	41	93	15	0.21	—	960	71	47	20	0.15	—	1200	65	
	VF 30_40	40	36	70	14	0.16	—	1090	66	35	19	0.12	—	1360	60	
	VF 30_60	60	29	47	14	0.12	—	1270	59	23.3	19	0.09	—	1590	51	
	VF 30_70	70	26	40	11	0.08	—	1380	55	20.0	15	0.07	—	1600	48	
				n_1 = 900 min^{-1}						n_1 = 500 min^{-1}						
	VF 30_7	7	69	129	18	0.30	150	730	82	71	20	0.19	150	920	81	171
	VF 30_10	10	64	90	18	0.22	150	900	79	50	20	0.14	150	1120	77	
	VF 30_15	15	56	60	20	0.17	—	1060	74	33	22	0.11	150	1320	71	
	VF 30_20	20	51	45	20	0.14	—	1200	70	25.0	22	0.09	150	1490	67	
	VF 30_30	30	41	30	22	0.12	—	1400	61	16.7	24	0.07	—	1700	58	
	VF 30_40	40	36	23	20	0.09	—	1590	56	12.5	22	0.06	—	1700	53	
	VF 30_60	60	29	15	20	0.07	—	1650	48	8.3	22	0.05	—	1700	44	
	VF 30_70	70	26	13	17	0.05	—	1700	45	7.0	19	0.04	—	1700	41	

(–) Contact our technical service department advising radial load data (rotation direction, load angle, offset)

VF 44 - VF/VF 30/44

55 Nm

		i	ηs %	n_2 min^{-1}	M_{n2} Nm	P_{n1} kW	R_{n1} N	R_{n2} N	η_d %	n_2 min^{-1}	M_{n2} Nm	P_{n1} kW	R_{n1} N	R_{n2} N	η_d %	
				n_1 = 2800 min^{-1}						n_1 = 1400 min^{-1}						
VF 44	VF 44_7	7	71	400	22	1.1	220	950	88	200	29	0.71	220	1180	86	171
	VF 44_10	10	66	280	22	0.74	220	1150	87	140	29	0.51	220	1430	84	
	VF 44_14	14	60	200	22	0.55	220	1340	84	100	29	0.37	220	1680	81	
	VF 44_20	20	55	140	29	0.52	220	1490	81	70	39	0.37	220	1860	77	
	VF 44_28	28	45	100	29	0.40	220	1710	76	50	39	0.29	220	2140	71	
	VF 44_35	35	42	80	29	0.33	220	1870	73	40	39	0.25	220	2300	68	
	VF 44_46	46	37	61	29	0.27	220	2080	69	30.0	39	0.19	220	2300	63	
	VF 44_60	60	32	47	29	0.22	220	2290	65	23.3	39	0.16	220	2300	58	
	VF 44_70	70	30	40	22	0.15	220	2300	62	20.0	29	0.11	220	2300	55	
	VF 44_100	100	24	28	21	0.11	220	2300	55	14.0	28	0.09	220	2300	47	
				n_1 = 900 min^{-1}						n_1 = 500 min^{-1}						
	VF 44_7	7	71	129	39	0.63	220	1300	85	71	45	0.41	220	1610	83	171
	VF 44_10	10	66	90	39	0.45	220	1610	82	50	45	0.29	220	1980	80	
	VF 44_14	14	60	64	39	0.34	220	1890	78	36	50	0.25	220	2280	76	
	VF 44_20	20	55	45	45	0.29	220	2160	74	25.0	50	0.18	220	2500	72	
	VF 44_28	28	45	32	49	0.24	220	2300	67	17.9	55	0.16	220	2500	64	
	VF 44_35	35	42	25.7	49	0.20	220	2300	64	14.3	55	0.14	220	2500	60	
	VF 44_46	46	37	19.6	49	0.17	220	2300	59	10.9	50	0.10	220	2500	55	
	VF 44_60	60	32	15.0	45	0.13	200	2300	54	8.3	50	0.09	220	2500	50	
	VF 44_70	70	30	12.9	39	0.10	220	2300	51	7.1	45	0.07	220	2500	47	
	VF 44_100	100	24	9.0	30	0.06	220	2300	43	5.0	32	0.04	220	2500	39	

70 Nm

		i	ηs %	n_2 min^{-1}	M_{n2} Nm	P_{n1} kW	R_{n1} N	R_{n2} N	η_d %	n_2 min^{-1}	M_{n2} Nm	P_{n1} kW	R_{n1} N	R_{n2} N	η_d %	
				n_1 = 1400 min^{-1}						n_1 = 900 min^{-1}						
VF/VF 30/44	VF/VF 30/44 _245	245	29	5.7	60	0.09	140	2500	40	3.7	70	0.07	150	2500	38	174
	VF/VF 30/44 _350	350	27	4.0	60	0.07	80	2500	36	2.6	70	0.05	150	2500	38	
	VF/VF 30/44 _420	420	25	3.3	60	0.06	—	2500	35	2.1	70	0.04	—	2500	39	
	VF/VF 30/44 _560	560	23	2.5	60	0.05	—	2500	31	1.6	70	0.04	—	2500	29	
	VF/VF 30/44 _700	700	21	2.0	60	0.04	—	2500	31	1.3	70	0.03	—	2500	31	
	VF/VF 30/44 _840	840	18	1.7	60	0.04	—	2500	26	1.1	70	0.03	—	2500	26	
	VF/VF 30/44 _1120	1120	16	1.3	60	0.03	—	2500	26	0.80	70	0.02	—	2500	29	
	VF/VF 30/44 _1680	1680	13	0.83	60	0.02	—	2500	26	0.54	70	0.02	—	2500	20	
	VF/VF 30/44 _2100	2100	12	0.67	60	0.02	—	2500	21	0.43	70	0.02	—	2500	16	

(–) Contact our technical service department advising radial load data (rotation direction, load angle, offset)

Bonfiglioli Riduttori

VF 49 - VFR 49

88 Nm

		i	ηs %	n_2 min-1	M_{n2} Nm	P_{n1} kW	R_{n1} N	R_{n2} N	ηd %	n_2 min-1	M_{n2} Nm	P_{n1} kW	R_{n1} N	R_{n2} N	ηd %	
				n_1 = 2800 min-1						n_1 = 1400 min-1						
VF 49	VF 49_7	7	70	400	41	2.0	400	950	88	200	54	1.3	400	1170	86	171
	VF 49_10	10	65	280	44	1.5	400	1140	86	140	59	1.0	400	1410	84	
	VF 49_14	14	59	200	49	1.2	400	1310	84	100	65	0.90	400	1630	81	
	VF 49_18	18	55	156	44	0.87	400	1520	82	78	59	0.60	400	1890	78	
	VF 49_24	24	50	117	47	0.73	400	1670	79	58	63	0.50	400	2110	75	
	VF 49_28	28	43	100	56	0.78	400	1740	75	50	74	0.55	400	2170	71	
	VF 49_36	36	39	78	52	0.59	400	1970	72	39	69	0.42	400	2460	67	
	VF 49_45	45	35	62	49	0.46	400	2180	69	31	65	0.33	400	2725	63	
	VF 49_60	60	30	47	44	0.34	400	2480	64	23.3	59	0.25	400	3100	58	
	VF 49_70	70	28	40	41	0.28	400	2650	61	20.0	55	0.21	400	3150	54	
	VF 49_80	80	25	35	41	0.25	400	2780	59	17.5	54	0.19	400	3150	52	
	VF 49_100	100	22	28.0	37	0.20	400	3050	54	14.0	49	0.13	400	3150	47	
				n_1 = 900 min-1						n_1 = 500 min-1						
	VF 49_7	7	70	129	61	0.97	400	1370	85	71	74	0.67	400	1670	83	171
	VF 49_10	10	65	90	64	0.75	400	1670	82	50	74	0.49	400	2060	80	
	VF 49_14	14	59	64	71	0.61	400	1920	78	36	78	0.39	400	2400	75	
	VF 49_18	18	55	50	68	0.47	400	2190	75	27.8	74	0.30	400	2730	72	
	VF 49_24	24	50	38	68	0.36	400	2480	71	20.8	74	0.24	400	3090	68	
	VF 49_28	28	43	32	82	0.41	400	2540	67	17.9	88	0.26	400	3180	63	
	VF 49_36	36	39	25.0	75	0.31	400	2880	63	13.9	80	0.20	400	3450	59	
	VF 49_45	45	35	20.0	71	0.25	400	3190	59	11.1	78	0.17	400	3450	55	
	VF 49_60	60	30	15.0	64	0.19	400	3300	53	8.3	69	0.12	400	3450	49	
	VF 49_70	70	28	12.9	60	0.16	400	3300	50	7.1	69	0.11	400	3450	46	
	VF 49_80	80	25	11.3	58	0.14	400	3300	47	6.3	59	0.09	400	3450	43	
	VF 49_100	100	22	9.0	52	0.11	400	3300	42	5.0	59	0.08	400	3450	38	

95 Nm

		i	ηs %	n_2 min-1	M_{n2} Nm	P_{n1} kW	R_{n1} N	R_{n2} N	ηd %	n_2 min-1	M_{n2} Nm	P_{n1} kW	R_{n1} N	R_{n2} N	ηd %	
				n_1 = 2800 min-1						n_1 = 1400 min-1						
VFR 49	VFR 49 _42	42	58	67	71	0.65	230	1920	76	33	78	0.37	230	2500	74	173
	VFR 49 _54	54	54	52	68	0.50	230	2180	74	25.9	74	0.28	230	2830	71	
	VFR 49 _72	72	49	39	68	0.40	230	2470	70	19.4	74	0.22	230	3190	67	
	VFR 49 _84	84	42	33	82	0.44	230	2520	66	16.6	88	0.25	230	3290	62	
	VFR 49 _108	108	38	25.9	75	0.33	230	2860	62	12.9	80	0.19	230	3450	58	
	VFR 49 _135	135	34	20.7	71	0.27	230	3160	58	10.3	88	0.18	230	3450	54	
	VFR 49 _180	180	29	15.6	64	0.20	230	3300	52	7.7	69	0.12	230	3450	48	
	VFR 49 _210	210	27	13.3	60	0.17	230	3300	49	6.6	69	0.11	230	3450	45	
	VFR 49 _240	240	25	11.7	58	0.15	230	3300	46	5.8	59	0.09	230	3450	42	
	VFR 49 _300	300	22	9.3	52	0.12	230	3300	41	4.7	59	0.08	230	3450	37	
				n_1 = 900 min-1						n_1 = 500 min-1						
	VFR 49 _42	42	58	21.4	82	0.26	230	2960	72	11.9	90	0.16	230	3450	70	173
	VFR 49 _54	54	54	16.7	79	0.20	230	3330	69	9.3	83	0.12	230	3450	67	
	VFR 49 _72	72	49	12.5	79	0.16	230	3450	64	6.9	83	0.10	230	3450	62	
	VFR 49 _84	84	42	10.7	91	0.17	230	3450	59	6.0	95	0.10	230	3450	57	
	VFR 49 _108	108	38	8.3	84	0.13	230	3450	55	4.6	90	0.08	230	3450	52	
	VFR 49 _135	135	34	6.7	82	0.11	230	3450	50	3.7	90	0.07	230	3450	48	
	VFR 49 _180	180	29	5.0	75	0.09	230	3450	45	2.8	78	0.05	230	3450	42	
	VFR 49 _210	210	27	4.3	75	0.08	230	3450	41	2.4	78	0.05	230	3450	39	
	VFR 49 _240	240	25	3.8	64	0.06	230	3450	39	2.1	68	0.04	230	3450	36	
	VFR 49 _300	300	22	3.0	63	0.06	230	3450	34	1.7	65	0.04	230	3450	32	

VF/VF 30/49

100 Nm

		i	η_s %	n_2 min^{-1}	M_{n2} Nm	P_{n1} kW	R_{n1} N	R_{n2} N	η_d %	n_2 min^{-1}	M_{n2} Nm	P_{n1} kW	R_{n1} N	R_{n2} N	η_d %	
				n_1 = 1400 min^{-1}						n_1 = 900 min^{-1}						
VF/VF 30/49	**VF/VF 30/49_240**	240	32	5.8	95	0.13	80	3450	45	3.8	100	0.09	150	3450	44	174
	VF/VF 30/49_315	315	24	4.4	95	0.11	140	3450	40	2.9	100	0.07	150	3450	43	
	VF/VF 30/49_420	420	24	3.3	95	0.08	—	3450	41	2.1	100	0.06	—	3450	37	
	VF/VF 30/49_540	540	22	2.6	95	0.07	—	3450	37	1.7	100	0.05	—	3450	35	
	VF/VF 30/49_720	720	20	1.9	95	0.05	—	3450	39	1.3	100	0.04	—	3450	33	
	VF/VF 30/49_900	900	18	1.6	95	0.05	—	3450	31	1.0	100	0.04	—	3450	26	
	VF/VF 30/49_1120	1120	15	1.3	95	0.04	—	3450	31	0.80	100	0.03	—	3450	28	
	VF/VF 30/49_1440	1440	14	0.97	95	0.04	—	3450	24	0.63	100	0.03	—	3450	22	
	VF/VF 30/49_2160	2160	11	0.65	95	0.03	—	3450	21	0.42	100	0.02	—	3450	22	
	VF/VF 30/49_2700	2700	10	0.52	95	0.03	—	3450	17	0.33	100	0.02	—	3450	17	

(–) Contact our technical service department advising radial load data (rotation direction, load angle, offset)

W 63 - WR 63

190 Nm

		i	η_s %	n_2 min^{-1}	M_{n2} Nm	P_{n1} kW	R_{n1} N	R_{n2} N	η_d %	n_2 min^{-1}	M_{n2} Nm	P_{n1} kW	R_{n1} N	R_{n2} N	η_d %	
				n_1 = 2800 min^{-1}						n_1 = 1400 min^{-1}						
W 63	W 63_7	7	70	400	105	4.9	480	1010	90	200	120	2.9	480	1550	88	171
	W 63_10	10	66	280	125	4.2	370	1360	88	140	140	2.4	480	1840	86	
	W 63_12	12	63	233	125	3.5	435	1540	87	117	140	2.0	480	2070	85	
	W 63_15	15	59	187	125	2.8	410	1770	86	93	150	1.8	480	2280	83	
	W 63_19	19	55	147	130	2.4	310	1990	84	74	150	1.4	480	2600	81	
	W 63_24	24	52	117	130	1.9	370	2250	82	58	155	1.2	480	2890	78	
	W 63_30	30	44	93	125	1.6	440	2540	78	47	160	1.1	460	3170	74	
	W 63_38	38	40	74	130	1.3	330	2800	75	37	155	0.85	480	3580	70	
	W 63_45	45	37	62	130	1.2	380	3020	73	31	145	0.71	480	3920	67	
	W 63_64	64	31	44	110	0.75	480	3650	67	21.9	125	0.47	480	4680	61	
	W 63_80	80	27	35	100	0.59	480	4050	62	17.5	115	0.38	480	5000	56	
	W 63_100	100	23	28	100	0.51	480	4420	58	14.0	115	0.33	480	5000	51	
				n_1 = 900 min^{-1}						n_1 = 500 min^{-1}						
	W 63_7	7	70	129	130	2.0	480	1870	87	71	140	1.2	480	2420	84	171
	W 63_10	10	66	90	150	1.7	480	2220	84	50	165	1.1	480	2830	81	
	W 63_12	12	63	75	150	1.4	480	2480	82	42	165	0.92	480	3140	79	
	W 63_15	15	59	60	160	1.3	480	2740	80	33	180	0.83	480	3430	76	
	W 63_19	19	55	47	160	1.0	480	3100	78	26.3	180	0.68	480	3860	73	
	W 63_24	24	52	38	165	0.86	480	3440	75	20.8	185	0.58	480	4280	70	
	W 63_30	30	44	30	170	0.76	480	3770	70	16.7	190	0.52	480	4690	64	
	W 63_38	38	40	23.7	165	0.62	480	4240	66	13.2	185	0.42	480	5000	61	
	W 63_45	45	37	20.0	155	0.52	480	4630	63	11.1	170	0.34	480	5000	58	
	W 63_64	64	31	14.1	135	0.35	480	5000	56	7.8	150	0.24	480	5000	51	
	W 63_80	80	27	11.3	125	0.28	480	5000	52	6.3	135	0.19	480	5000	46	
	W 63_100	100	23	9.0	120	0.25	480	5000	46	5.0	130	0.17	480	5000	41	

220 Nm

		i	η_s %	n_2 min^{-1}	M_{n2} Nm	P_{n1} kW	R_{n1} N	R_{n2} N	η_d %	n_2 min^{-1}	M_{n2} Nm	P_{n1} kW	R_{n1} N	R_{n2} N	η_d %	
				n_1 = 2800 min^{-1}						n_1 = 1400 min^{-1}						
WR 63	WR 63_21	21	69	133	130	2.1	180	1840	87	67	140	1.2	320	2510	84	173
	WR 63_30	30	65	93	150	1.7	300	2180	84	47	165	1.0	320	2920	81	
	WR 63_36	36	62	78	150	1.5	320	2430	82	39	165	0.85	320	3240	79	
	WR 63_45	45	58	62	160	1.3	320	2690	80	31	180	0.77	320	3540	76	
	WR 63_57	57	54	49	160	1.1	320	3050	78	24.6	180	0.63	320	3980	73	
	WR 63_72	72	51	39	165	0.90	320	3390	75	19.4	185	0.54	320	4410	70	
	WR 63_90	90	44	31	170	0.79	320	3710	70	15.6	190	0.48	320	4830	64	
	WR 63_114	114	39	24.6	165	0.62	320	4170	68	12.3	185	0.39	320	5000	61	
	WR 63_135	135	36	20.7	155	0.53	320	4560	63	10.4	170	0.32	320	5000	58	
	WR 63_192	192	30	14.6	135	0.37	320	5000	56	7.3	150	0.22	320	5000	51	
	WR 63_240	240	26	11.7	125	0.29	320	5000	52	5.8	135	0.18	320	5000	46	
	WR 63_300	300	22	9.3	120	0.25	320	5000	46	4.7	130	0.15	320	5000	41	
				n_1 = 900 min^{-1}						n_1 = 500 min^{-1}						
	WR 63_21	21	69	43	155	0.85	320	2960	82	23.8	170	0.53	320	3750	80	173
	WR 63_30	30	65	30	180	0.72	320	3470	79	16.7	200	0.45	320	4360	77	
	WR 63_36	36	62	25.0	180	0.61	320	3830	77	14.0	200	0.40	320	4790	74	
	WR 63_45	45	58	20.0	190	0.54	320	4230	74	11.1	200	0.33	320	5000	71	
	WR 63_57	57	54	15.8	190	0.44	320	4740	71	8.8	200	0.27	320	5000	68	
	WR 63_72	72	51	12.5	190	0.37	320	5000	68	6.9	190	0.22	320	5000	64	
	WR 63_90	90	44	10.0	205	0.35	320	5000	62	5.6	220	0.22	320	5000	58	
	WR 63_114	114	39	7.9	200	0.29	320	5000	58	4.4	210	0.18	320	5000	54	
	WR 63_135	135	36	6.7	180	0.23	320	5000	54	3.7	190	0.15	320	5000	50	
	WR 63_192	192	30	4.7	150	0.16	320	5000	47	2.6	150	0.10	320	5000	43	
	WR 63_240	240	26	3.8	140	0.13	320	5000	43	2.1	140	0.08	320	5000	39	
	WR 63_300	300	22	3.0	130	0.11	320	5000	38	1.7	130	0.07	320	5000	34	

VF/W 30/63

230 Nm

		i	η_s %	n_2 min^{-1}	M_{n2} Nm	P_{n1} kW	R_{n1} N	R_{n2} N	η_d %	n_2 min^{-1}	M_{n2} Nm	P_{n1} kW	R_{n1} N	R_{n2} N	η_d %	
				n_1 = 1400 min^{-1}						n_1 = 900 min^{-1}						
VF/W 30/63	**VF/W 30/63_240**	240	33	5.8	210	0.27	80	5000	47	3.8	230	0.20	150	5000	45	174
	VF/W 30/63_315	315	26	4.4	210	0.23	140	5000	42	2.9	230	0.17	150	5000	41	
	VF/W 30/63_450	450	25	3.1	210	0.17	—	5000	41	2.0	230	0.11	—	5000	42	
	VF/W 30/63_570	570	22	2.5	210	0.14	—	5000	40	1.6	230	0.11	—	5000	36	
	VF/W 30/63_720	720	21	1.9	210	0.12	—	5000	37	1.3	230	0.09	—	5000	32	
	VF/W 30/63_900	900	18	1.6	210	0.11	—	5000	30	1.0	230	0.08	—	5000	29	
	VF/W 30/63_1200	1200	16	1.2	210	0.11	—	5000	24	0.75	230	0.07	—	5000	25	
	VF/W 30/63_1520	1520	14	0.92	210	0.08	—	5000	24	0.59	230	0.06	—	5000	23	
	VF/W 30/63_2280	2280	12	0.61	210	0.06	—	5000	21	0.39	230	0.04	—	5000	23	
	VF/W 30/63_2700	2700	11	0.52	210	0.05	—	5000	22	0.33	230	0.04	—	5000	19	

(–) Contact our technical service department advising radial load data (rotation direction, load angle, offset)

Bonfiglioli Riduttori

W 75 - WR 75

320 Nm

		i	η_s %	n_2 min^{-1}	M_{n2} Nm	P_{n1} kW	R_{n1} N	R_{n2} N	η_d %	n_2 min^{-1}	M_{n2} Nm	P_{n1} kW	R_{n1} N	R_{n2} N	η_d %	
				n_1 = 2800 min^{-1}						n_1 = 1400 min^{-1}						
W 75	W 75_7	7	71	400	170	7.8	750	700	91	200	190	4.4	750	1530	90	171
	W 75_10	10	67	280	205	6.7	750	1610	90	140	230	3.8	750	2240	88	
	W 75_15	15	60	187	225	5.0	750	2120	88	93	250	2.9	750	2870	85	
	W 75_20	20	56	140	225	3.8	750	2550	86	70	250	2.2	750	3410	83	
	W 75_25	25	52	112	225	3.2	750	2900	83	56	250	1.8	750	3840	80	
	W 75_30	30	45	93	240	2.9	750	3100	81	47	270	1.7	750	4090	77	
	W 75_40	40	40	70	225	2.1	750	3660	77	35	255	1.3	750	4770	72	
	W 75_50	50	36	56	195	1.6	750	4180	73	28.0	220	0.95	750	5410	68	
	W 75_60	60	33	47	180	1.3	750	4610	70	23.3	200	0.75	750	5960	65	
	W 75_80	80	28	35	160	0.90	750	5310	65	17.5	180	0.56	750	6200	59	
	W 75_100	100	25	28.0	135	0.65	750	5960	61	14.0	150	0.40	750	6200	55	
				n_1 = 900 min^{-1}						n_1 = 500 min^{-1}						
	W 75_7	7	71	129	205	3.1	750	2120	88	71	225	2.0	750	2940	86	171
	W 75_10	10	67	90	250	2.7	750	2700	86	50	275	1.7	750	3480	84	
	W 75_15	15	60	60	270	2.0	750	3440	83	33	295	1.3	750	4380	80	
	W 75_20	20	56	45	270	1.6	750	4050	80	25.0	295	1.0	750	5120	77	
	W 75_25	25	52	36	270	1.3	750	4550	77	20.0	295	0.85	750	5720	73	
	W 75_30	30	45	30	290	1.2	750	4860	74	16.7	320	0.81	750	6080	69	
	W 75_40	40	40	22.5	275	1.0	750	5630	68	12.5	305	0.63	750	6200	63	
	W 75_50	50	36	18.0	235	0.70	750	6200	63	10.0	260	0.47	750	6200	58	
	W 75_60	60	33	15.0	215	0.56	750	6200	60	8.3	235	0.37	750	6200	55	
	W 75_80	80	28	11.3	195	0.43	750	6200	54	6.3	215	0.29	750	6200	49	
	W 75_100	100	25	9.0	160	0.30	750	6200	50	5.0	180	0.21	750	6200	44	

420 Nm

		i	η_s %	n_2 min^{-1}	M_{n2} Nm	P_{n1} kW	R_{n1} N	R_{n2} N	η_d %	n_2 min^{-1}	M_{n2} Nm	P_{n1} kW	R_{n1} N	R_{n2} N	η_d %	
				n_1 = 2800 min^{-1}						n_1 = 1400 min^{-1}						
WR 75	WR 75_21	21	70	133	205	3.3	500	2030	88	67	225	1.8	500	3060	86	173
	WR 75_30	30	66	93	250	2.8	500	2640	86	47	275	1.6	500	3610	84	
	WR 75_45	45	59	62	270	2.1	500	3380	83	31	295	1.2	500	4530	80	
	WR 75_60	60	55	47	270	1.6	500	3980	80	23.3	295	0.94	500	5280	77	
	WR 75_75	75	51	37	270	1.4	500	4480	77	18.7	295	0.79	500	5890	73	
	WR 75_90	90	44	31	290	1.3	500	4780	74	15.6	320	0.76	500	6200	69	
	WR 75_120	120	39	23.3	275	1.0	500	5540	68	11.7	305	0.59	500	6200	63	
	WR 75_150	150	35	18.7	235	0.73	500	6200	63	9.3	260	0.44	500	6200	58	
	WR 75_180	180	32	15.6	215	0.58	500	6200	60	7.8	235	0.35	500	6200	55	
	WR 75_240	240	27	11.7	195	0.44	500	6200	54	5.8	215	0.27	500	6200	49	
	WR 75_300	300	24	9.3	160	0.31	500	6200	50	4.7	180	0.20	500	6200	44	
				n_1 = 900 min^{-1}						n_1 = 500 min^{-1}						
	WR 75_21	21	70	43	245	1.3	500	3660	85	23.8	270	0.82	500	4660	82	173
	WR 75_30	30	66	30	330	1.3	500	4070	82	16.7	370	0.81	500	5160	80	
	WR 75_45	45	59	20.0	350	0.94	500	5180	78	11.1	400	0.62	500	6200	75	
	WR 75_60	60	55	15.0	330	0.69	500	6180	75	8.3	370	0.45	500	6200	71	
	WR 75_75	75	51	12.0	330	0.59	500	6200	70	6.7	350	0.37	500	6200	66	
	WR 75_90	90	44	10.0	370	0.58	500	6200	67	5.6	420	0.39	500	6200	63	
	WR 75_120	120	39	7.5	330	0.43	500	6200	60	4.2	380	0.30	500	6200	56	
	WR 75_150	150	35	6.0	310	0.35	500	6200	55	3.3	350	0.24	500	6200	51	
	WR 75_180	180	32	5.0	280	0.29	500	6200	51	2.8	320	0.20	500	6200	47	
	WR 75_240	240	27	3.8	220	0.19	500	6200	45	2.1	280	0.15	500	6200	41	
	WR 75_300	300	24	3.0	200	0.15	500	6200	41	1.7	260	0.12	500	6200	37	

WR 75 - VF/W 44/75

370 Nm

		i	ηs %	n_2 min-1	M_{n2} Nm	P_{n1} kW	R_{n1} N	R_{n2} N	ηd %	n_2 min-1	M_{n2} Nm	P_{n1} kW	R_{n1} N	R_{n2} N	ηd %	
				n_1 = 2800 min-1						n_1 = 1400 min-1						
WR 75_P90 B5	WR 75_15	15	66	187	220	4.9	—	1960	89	93	250	2.9	—	2640	86	173
	WR 75_22.5	22.5	59	124	240	3.7	—	2530	86	62	270	2.1	—	3380	83	
	WR 75_30	30	55	93	240	2.8	—	3020	84	47	270	1.7	—	3980	80	
	WR 75_37.5	37.5	51	75	240	2.3	—	3410	81	37	270	1.4	—	4480	77	
	WR 75_45	45	44	62	255	2.1	—	3660	79	31	290	1.3	—	4780	74	
	WR 75_60	60	39	47	240	1.6	—	4290	74	23.3	275	1.0	—	5540	68	
	WR 75_75	75	35	37	210	1.2	—	4860	70	18.7	235	0.74	—	6200	63	
	WR 75_90	90	32	31	190	0.93	—	4460	67	15.6	215	0.59	—	6200	60	
	WR 75_120	120	27	23.3	170	0.69	—	4960	61	11.7	195	0.44	—	6200	54	
	WR 75_150	150	24	18.7	145	0.49	—	5150	58	9.3	160	0.32	—	6200	50	
				n_1 = 900 min-1						n_1 = 500 min-1						
	WR 75_15	15	66	60	275	2.1	—	3150	84	33	330	1.4	—	3850	82	173
	WR 75_22.5	22.5	59	40	295	1.6	—	4010	80	22.2	350	1.0	—	4920	78	
	WR 75_30	30	55	30	295	1.2	—	4710	77	16.7	330	0.77	—	5890	75	
	WR 75_37.5	37.5	51	24	295	1.0	—	5280	73	13.3	330	0.66	—	6200	70	
	WR 75_45	45	44	20	320	0.98	—	5610	69	11.1	370	0.64	—	6200	67	
	WR 75_60	60	39	15	305	0.77	—	6200	63	8.3	330	0.48	—	6200	60	
	WR 75_75	75	35	12	260	0.57	—	6200	58	6.7	310	0.39	—	6200	55	
	WR 75_90	90	32	10	235	0.45	—	6200	55	5.6	280	0.32	—	6200	52	
	WR 75_120	120	27	7.5	215	0.35	—	6200	49	4.2	220	0.21	—	6200	46	
	WR 75_150	150	24	6.0	180	0.26	—	6200	44	3.3	200	0.17	—	6200	41	

400 Nm

		i	ηs %	n_2 min-1	M_{n2} Nm	P_{n1} kW	R_{n1} N	R_{n2} N	ηd %	n_2 min-1	M_{n2} Nm	P_{n1} kW	R_{n1} N	R_{n2} N	ηd %	
				n_1 = 1400 min-1						n_1 = 900 min-1						
VF/W 44/75	VF/W 44/75_250	250	34	5.6	370	0.38	220	4560	57	3.6	400	0.29	220	4660	52	174
	VF/W 44/75_300	300	30	4.7	370	0.35	220	5160	51	3.0	400	0.27	220	5150	46	
	VF/W 44/75_400	400	26	3.5	370	0.29	220	6200	46	2.3	400	0.22	220	6200	42	
	VF/W 44/75_525	525	25	2.7	370	0.23	220	6200	44	1.7	400	0.18	220	6200	41	
	VF/W 44/75_700	700	24	2.0	370	0.18	220	6200	42	1.3	400	0.14	220	6200	39	
	VF/W 44/75_920	920	21	1.5	370	0.15	—	6200	40	1.0	400	0.11	60	6200	36	
	VF/W 44/75_1200	1200	18	1.2	370	0.12	—	6200	37	0.75	400	0.10	220	6200	31	
	VF/W 44/75_1500	1500	17	0.93	370	0.10	220	6200	37	0.60	400	0.09	220	6200	29	
	VF/W 44/75_2100	2100	14	0.67	370	0.09	220	6200	30	0.43	400	0.07	220	6200	24	
	VF/W 44/75_2800	2800	12	0.50	370	0.07	220	6200	26	0.32	400	0.06	220	6200	22	

(–) Contact our technical service department advising radial load data (rotation direction, load angle, offset)

Bonfiglioli Riduttori

W 86 - WR 86

440 Nm

		i	η_s %	n_2 min^{-1}	M_{n2} Nm	P_{n1} kW	R_{n1} N	R_{n2} N	η_d %	n_2 min^{-1}	M_{n2} Nm	P_{n1} kW	R_{n1} N	R_{n2} N	η_d %	
				n_1 = 2800 min^{-1}						n_1 = 1400 min^{-1}						
W 86	W 86_7	7	71	400	225	10.4	850	2930	91	200	250	5.9	850	3920	89	171
	W 86_10	10	67	280	260	8.5	850	3490	90	140	290	4.8	850	4620	88	
	W 86_15	15	60	187	295	6.6	850	4200	87	93	330	3.8	850	5510	85	
	W 86_20	20	60	140	285	4.9	850	4900	86	70	320	2.8	850	6380	84	
	W 86_23	23	58	122	285	4.3	850	5250	85	61	320	2.5	850	6800	82	
	W 86_30	30	45	93	320	3.9	850	5740	81	47	370	2.4	850	7000	76	
	W 86_40	40	45	70	295	2.7	850	6670	79	35	330	1.6	850	7000	75	
	W 86_46	46	43	61	305	2.5	850	7000	77	30	340	1.5	850	7000	73	
	W 86_56	56	39	50	265	1.8	850	7000	75	25.0	300	1.1	850	7000	70	
	W 86_64	64	37	44	250	1.6	850	7000	73	21.9	280	0.94	850	7000	68	
	W 86_80	80	33	35	225	1.2	850	7000	69	17.5	255	0.73	850	7000	64	
	W 86_100	100	29	28.0	205	0.92	850	7000	65	14.0	230	0.57	850	7000	59	
				n_1 = 900 min^{-1}						n_1 = 500 min^{-1}						
	W 86_7	7	71	129	270	4.1	850	4670	88	71	295	2.6	850	5890	85	171
	W 86_10	10	67	90	310	3.4	850	5500	86	50	345	2.2	850	6860	82	
	W 86_15	15	60	60	355	2.7	850	6520	82	33	390	1.7	850	7000	78	
	W 86_20	20	60	45	345	2.0	850	7000	81	25.0	380	1.3	850	7000	77	
	W 86_23	23	58	39	345	1.8	850	7000	80	21.7	380	1.2	850	7000	75	
	W 86_30	30	45	30	400	1.7	850	7000	73	16.7	440	1.1	850	7000	67	
	W 86_40	40	45	22.5	355	1.2	850	7000	71	12.5	390	0.77	850	7000	66	
	W 86_46	46	43	19.6	365	1.1	850	7000	69	10.9	405	0.73	850	7000	63	
	W 86_56	56	39	16.1	325	0.83	850	7000	66	8.9	355	0.55	850	7000	60	
	W 86_64	64	37	14.1	300	0.70	850	7000	63	7.8	330	0.47	850	7000	58	
	W 86_80	80	33	11.3	275	0.55	850	7000	59	6.3	305	0.38	850	7000	53	
	W 86_100	100	29	9.0	250	0.43	850	7000	55	5.0	275	0.29	850	7000	49	

550 Nm

		i	η_s %	n_2 min^{-1}	M_{n2} Nm	P_{n1} kW	R_{n1} N	R_{n2} N	η_d %	n_2 min^{-1}	M_{n2} Nm	P_{n1} kW	R_{n1} N	R_{n2} N	η_d %	
				n_1 = 2800 min^{-1}						n_1 = 1400 min^{-1}						
WR 86	WR 86_21	21	70	133	270	4.3	500	4590	88	67	295	2.4	500	6070	85	173
	WR 86_30	30	66	93	310	3.5	500	5410	86	47	345	2.1	500	7000	82	
	WR 86_45	45	59	62	355	2.8	500	6420	82	31	390	1.6	500	7000	78	
	WR 86_60	60	59	47	345	2.1	500	7000	81	23.3	380	1.2	500	7000	77	
	WR 86_69	69	57	41	345	1.8	500	7000	80	20.3	380	1.1	500	7000	75	
	WR 86_90	90	44	31	400	1.8	500	7000	73	15.6	440	1.1	500	7000	67	
	WR 86_120	120	44	23.3	355	1.2	500	7000	71	11.7	390	0.72	500	7000	66	
	WR 86_138	138	42	20.3	365	1.1	500	7000	69	10.1	405	0.68	500	7000	63	
	WR 86_168	168	38	16.7	325	0.86	500	7000	66	8.3	355	0.52	500	7000	60	
	WR 86_192	192	36	14.6	300	0.73	500	7000	63	7.3	330	0.43	500	7000	58	
	WR 86_240	240	32	11.7	275	0.57	500	7000	59	5.8	305	0.35	500	7000	53	
	WR 86_300	300	28	9.3	250	0.44	500	7000	55	4.7	275	0.27	500	7000	49	
				n_1 = 900 min^{-1}						n_1 = 500 min^{-1}						
	WR 86_21	21	70	43	325	1.8	500	7000	83	23.8	355	1.1	500	7000	81	173
	WR 86_30	30	66	30	375	1.5	500	7000	81	16.7	415	0.93	500	7000	78	
	WR 86_45	45	59	20.0	450	1.2	500	7000	76	11.1	500	0.80	500	7000	73	
	WR 86_60	60	59	15.0	430	0.90	500	7000	75	8.3	440	0.53	500	7000	72	
	WR 86_69	69	57	13.0	390	0.73	500	7000	73	7.2	400	0.43	500	7000	70	
	WR 86_90	90	44	10.0	500	0.82	500	7000	64	5.6	550	0.53	500	7000	60	
	WR 86_120	120	44	7.5	440	0.55	500	7000	63	4.2	470	0.35	500	7000	59	
	WR 86_138	138	42	6.5	430	0.48	500	7000	61	3.6	440	0.30	500	7000	56	
	WR 86_168	168	38	5.4	390	0.38	500	7000	57	3.0	410	0.24	500	7000	53	
	WR 86_192	192	36	4.7	390	0.35	500	7000	55	2.6	410	0.22	500	7000	50	
	WR 86_240	240	32	3.8	310	0.24	500	7000	50	2.1	320	0.15	500	7000	46	
	WR 86_300	300	28	3.0	310	0.22	500	7000	45	1.7	320	0.14	500	7000	41	

WR 86 - VF/W 44/86

500 Nm

		i	η_s %	n_2 min^{-1}	M_{n2} Nm	P_{n1} kW	R_{n1} N	R_{n2} N	η_d %	n_2 min^{-1}	M_{n2} Nm	P_{n1} kW	R_{n1} N	R_{n2} N	η_d %	
				n_1 = 2800 min^{-1}						n_1 = 1400 min^{-1}						
WR 86_P90 B5	**WR 86_15**	15	66	187	275	6.1	—	4130	88	93	310	3.5	—	5410	86	173
	WR 86_22.5	22.5	59	124	315	4.8	—	4920	86	62	355	2.8	—	6420	82	
	WR 86_30	30	59	93	305	3.5	—	5720	85	47	345	2.1	—	7000	81	
	WR 86_34.5	34.5	57	81	305	3.1	—	6110	84	41	345	1.8	—	7000	80	
	WR 86_45	45	44	62	350	3.0	—	6640	77	31	400	1.8	—	7000	73	
	WR 86_60	60	44	47	315	2.0	—	7000	77	23.3	355	1.2	—	7000	71	
	WR 86_69	69	42	41	325	1.8	—	7000	75	20.3	365	1.1	—	7000	69	
	WR 86_84	84	38	33	285	1.4	—	7000	72	16.7	325	0.86	—	7000	66	
	WR 86_96	96	36	29.2	265	1.2	—	7000	70	14.6	300	0.73	—	7000	63	
	WR 86_120	120	32	23.3	240	0.88	—	7000	67	11.7	275	0.57	—	7000	59	
	WR 86_150	150	28	18.7	220	0.69	—	7000	62	9.3	250	0.44	—	7000	55	
				n_1 = 900 min^{-1}						n_1 = 500 min^{-1}						
	WR 86_15	15	66	60	345	2.6	—	6330	82	33	375	1.6	—	7000	81	173
	WR 86_22.5	22.5	59	40	390	2.1	—	7000	78	22.2	450	1.4	—	7000	76	
	WR 86_30	30	59	30	380	1.6	—	7000	77	16.7	430	1.0	—	7000	75	
	WR 86_34.5	34.5	57	26.1	380	1.4	—	7000	75	14.5	390	0.81	—	7000	73	
	WR 86_45	45	44	20.0	440	1.4	—	7000	67	11.1	500	0.91	—	7000	64	
	WR 86_60	60	44	15.0	390	0.93	—	7000	66	8.3	440	0.61	—	7000	63	
	WR 86_69	69	42	13.0	405	0.88	—	7000	63	7.2	430	0.53	—	7000	61	
	WR 86_84	84	38	10.7	355	0.66	—	7000	60	6.0	390	0.43	—	7000	57	
	WR 86_96	96	36	9.4	330	0.56	—	7000	58	5.2	390	0.39	—	7000	55	
	WR 86_120	120	32	7.5	305	0.45	—	7000	53	4.2	310	0.27	—	7000	50	
	WR 86_150	150	28	6.0	275	0.35	—	7000	49	3.3	310	0.24	—	7000	46	

550 Nm

		i	η_s %	n_2 min^{-1}	M_{n2} Nm	P_{n1} kW	R_{n1} N	R_{n2} N	η_d %	n_2 min^{-1}	M_{n2} Nm	P_{n1} kW	R_{n1} N	R_{n2} N	η_d %	
				n_1 = 1400 min^{-1}						n_1 = 900 min^{-1}						
VF/W 44/86	**VF/W 44/86_230**	230	38	6.1	500	0.59	220	7000	54	3.9	550	0.43	220	7000	53	174
	VF/W 44/86_300	300	30	4.7	500	0.54	220	7000	45	3.0	550	0.41	220	7000	42	
	VF/W 44/86_400	400	30	3.5	500	0.45	220	7000	41	2.3	550	0.32	220	7000	41	
	VF/W 44/86_525	525	25	2.7	500	0.33	220	7000	42	1.7	550	0.25	220	7000	39	
	VF/W 44/86_700	700	25	2.0	500	0.27	220	7000	39	1.3	550	0.20	220	7000	37	
	VF/W 44/86_920	920	22	1.5	500	0.20	220	7000	40	1.0	550	0.15	—	7000	37	
	VF/W 44/86_1380	1380	17	1.0	500	0.17	220	7000	32	0.65	550	0.13	—	7000	28	
	VF/W 44/86_1840	1840	17	0.76	500	0.13	220	7000	30	0.49	550	0.10	—	7000	28	
	VF/W 44/86_2116	2116	16	0.66	500	0.12	220	7000	28	0.43	550	0.09	220	7000	28	
	VF/W 44/86_2760	2760	14	0.51	500	0.11	—	7000	24	0.33	550	0.08	220	7000	24	

(–) Contact our technical service department advising radial load data (rotation direction, load angle, offset)

Bonfiglioli Riduttori

W 110 - WR 110

830 Nm

		i	η_s %	n_2 min^{-1}	M_{n2} Nm	P_{n1} kW	R_{n1} N	R_{n2} N	η_d %	n_2 min^{-1}	M_{n2} Nm	P_{n1} kW	R_{n1} N	R_{n2} N	η_d %	
				n_1 = 2800 min^{-1}						n_1 = 1400 min^{-1}						
W 110	W 110_7	7	71	400	445	20.7	1200	3710	90	200	500	11.8	1200	5020	89	171
	W 110_10	10	67	280	490	16.1	1200	4650	89	140	550	9.3	1200	6190	87	
	W 110_15	15	60	187	535	12.0	1200	5770	87	93	600	7.0	1200	7590	84	
	W 110_20	20	61	140	510	8.7	1200	6790	86	70	570	5.0	1200	8000	84	
	W 110_23	23	59	122	480	7.1	1200	7430	86	61	540	4.1	1200	8000	83	
	W 110_30	30	45	93	625	7.5	1200	7780	81	47	700	4.4	1200	8000	77	
	W 110_40	40	46	70	595	5.5	1200	8000	80	35	670	3.2	1200	8000	76	
	W 110_46	46	44	61	535	4.3	1200	8000	79	30	600	2.6	1200	8000	74	
	W 110_56	56	41	50	535	3.7	1200	8000	76	25.0	600	2.2	1200	8000	72	
	W 110_64	64	38	44	470	2.9	1200	8000	74	21.9	530	1.7	1200	8000	70	
	W 110_80	80	34	35	420	2.2	1200	8000	71	17.5	470	1.3	1200	8000	66	
	W 110_100	100	30	28.0	410	1.8	1200	8000	67	14.0	460	1.1	1200	8000	62	
				n_1 = 900 min^{-1}						n_1 = 500 min^{-1}						
	W 110_7	7	71	129	540	8.3	1200	6040	88	71	595	5.2	1200	7680	86	171
	W 110_10	10	67	90	590	6.5	1200	7410	86	50	655	4.1	1200	8000	84	
	W 110_15	15	60	60	645	4.9	1200	8000	83	33	710	3.1	1200	8000	80	
	W 110_20	20	61	45	615	3.5	1200	8000	82	25.0	675	2.2	1200	8000	79	
	W 110_23	23	59	39	580	2.9	1200	8000	81	21.7	640	1.9	1200	8000	77	
	W 110_30	30	45	30	755	3.2	1200	8000	74	16.7	830	2.1	1200	8000	70	
	W 110_40	40	46	22.5	720	2.3	1200	8000	73	12.5	795	1.5	1200	8000	68	
	W 110_46	46	44	19.6	645	1.9	1200	8000	71	10.9	710	1.2	1200	8000	66	
	W 110_56	56	41	16.1	645	1.6	1200	8000	68	8.9	710	1.1	1200	8000	63	
	W 110_64	64	38	14.1	570	1.3	1200	8000	65	7.8	630	0.86	1200	8000	60	
	W 110_80	80	34	11.3	505	0.98	1200	8000	61	6.3	560	0.65	1200	8000	56	
	W 110_100	100	30	9.0	495	0.82	1200	8000	57	5.0	545	0.56	1200	8000	51	

1000 Nm

		i	η_s %	n_2 min^{-1}	M_{n2} Nm	P_{n1} kW	R_{n1} N	R_{n2} N	η_d %	n_2 min^{-1}	M_{n2} Nm	P_{n1} kW	R_{n1} N	R_{n2} N	η_d %	
				n_1 = 2800 min^{-1}						n_1 = 1400 min^{-1}						
WR 110	WR 110_21	21	70	133	540	8.6	700	5930	88	67	595	4.8	700	7950	86	173
	WR 110_30	30	66	93	590	6.7	700	7280	86	47	655	3.8	700	8000	84	
	WR 110_45	45	59	62	645	5.1	700	8000	83	31	710	2.9	700	8000	80	
	WR 110_60	60	60	47	615	3.7	700	8000	82	23.3	675	2.1	700	8000	79	
	WR 110_69	69	58	41	580	3.0	700	8000	81	20.3	640	1.8	700	8000	77	
	WR 110_90	90	44	31	755	3.3	700	8000	74	15.6	830	1.9	700	8000	70	
	WR 110_120	120	45	23.3	720	2.4	700	8000	73	11.7	795	1.4	700	8000	68	
	WR 110_138	138	43	20.3	645	1.9	700	8000	71	10.1	710	1.1	700	8000	66	
	WR 110_168	168	40	16.7	645	1.7	700	8000	68	8.3	710	0.98	700	8000	63	
	WR 110_192	192	37	14.6	570	1.3	700	8000	65	7.3	630	0.80	700	8000	60	
	WR 110_240	240	33	11.7	505	1.0	700	8000	61	5.8	560	0.61	700	8000	56	
	WR 110_300	300	29	9.3	495	0.85	700	8000	57	4.7	545	0.52	700	8000	51	
				n_1 = 900 min^{-1}						n_1 = 500 min^{-1}						
	WR 110_21	21	70	43	645	3.4	700	8000	84	23.8	715	2.2	700	8000	82	173
	WR 110_30	30	66	30	710	2.8	700	8000	81	16.7	785	1.7	700	8000	79	
	WR 110_45	45	59	20.0	870	2.4	700	8000	77	11.1	950	1.5	700	8000	75	
	WR 110_60	60	60	15.0	800	1.6	700	8000	77	8.3	850	1.0	700	8000	74	
	WR 110_69	69	58	13.0	750	1.4	700	8000	75	7.2	820	0.86	700	8000	72	
	WR 110_90	90	44	10.0	900	1.4	700	8000	66	5.6	1000	0.94	700	8000	62	
	WR 110_120	120	45	7.5	870	1.1	700	8000	65	4.2	950	0.68	700	8000	61	
	WR 110_138	138	43	6.5	800	0.87	700	8000	63	3.6	900	0.58	700	8000	59	
	WR 110_168	168	40	5.4	775	0.72	700	8000	60	3.0	800	0.45	700	8000	55	
	WR 110_192	192	37	4.7	685	0.59	700	8000	57	2.6	720	0.37	700	8000	53	
	WR 110_240	240	33	3.8	590	0.44	700	8000	53	2.1	620	0.28	700	8000	48	
	WR 110_300	300	29	3.0	570	0.37	700	8000	48	1.7	600	0.24	700	8000	44	

VF/W 49/110

1050 Nm

		i	η_s %	n_2 min^{-1}	M_{n2} Nm	P_{n1} kW	R_{n1} N	R_{n2} N	η_d %	n_2 min^{-1}	M_{n2} Nm	P_{n1} kW	R_{n1} N	R_{n2} N	η_d %	
				n_1 = 1400 min^{-1}						n_1 = 900 min^{-1}						
VF/W 49/110	**VF/W 49/110_230**	230	38	6.1	1000	1.2	400	8000	52	3.9	1050	0.84	400	8000	51	174
	VF/W 49/110_300	300	29	4.7	1000	1.0	400	8000	48	3.0	1050	0.70	400	8000	47	
	VF/W 49/110_400	400	30	3.5	1000	0.81	400	8000	45	2.3	1050	0.55	400	8000	45	
	VF/W 49/110_540	540	25	2.6	1000	0.66	400	8000	41	1.7	1050	0.48	400	8000	38	
	VF/W 49/110_720	720	24	1.9	1000	0.51	400	8000	40	1.3	1050	0.36	400	8000	38	
	VF/W 49/110_1080	1080	18	1.3	1000	0.44	400	8000	31	0.83	1050	0.28	400	8000	30	
	VF/W 49/110_1350	1350	16	1.0	1000	0.36	400	8000	30	0.67	1050	0.26	400	8000	28	
	VF/W 49/110_1656	1656	17	0.85	1000	0.30	400	8000	30	0.54	1050	0.20	400	8000	30	
	VF/W 49/110_2070	2070	15	0.68	1000	0.25	400	8000	28	0.43	1050	0.19	400	8000	25	
	VF/W 49/110_2800	2800	13	0.50	1000	0.22	400	8000	24	0.32	1050	0.17	400	8000	21	

VF 130 - VFR 130

1500 Nm

		i	ηs %	n_2 min^{-1}	M_{n2} Nm	P_{n1} kW	R_{n1} N	R_{n2} N	ηd %	n_2 min^{-1}	M_{n2} Nm	P_{n1} kW	R_{n1} N	R_{n2} N	ηd %	
				n_1 = 2800 min^{-1}						n_1 = 1400 min^{-1}						
VF 130	VF 130_7	7	71	400	555	25	1500	4930	91	200	740	17.4	1500	5990	89	171
	VF 130_10	10	67	280	593	19.3	1500	6210	90	140	790	13.3	1500	7620	88	
	VF 130_15	15	63	187	690	15.3	1500	7390	88	93	920	10.6	1500	9100	86	
	VF 130_20	20	59	140	675	11.4	1500	8670	87	70	900	8.0	1500	10700	84	
	VF 130_23	23	57	122	668	9.9	1500	9300	86	61	890	6.9	1500	11500	83	
	VF 130_30	30	49	93	788	9.3	1040	10100	83	47	1050	6.6	—	12500	79	
	VF 130_40	40	44	70	825	7.6	—	11400	80	35	1100	5.4	—	12600	76	
	VF 130_46	46	45	61	788	6.3	1290	12200	80	30.0	1050	4.5	—	12600	76	
	VF 130_56	56	42	50	720	4.8	1500	12600	78	25.0	960	3.4	940	12600	73	
	VF 130_64	64	39	44	698	4.2	1500	12600	76	21.9	930	3.0	1220	12600	71	
	VF 130_80	80	35	35	660	3.3	1500	12600	73	17.5	880	2.4	1500	12600	68	
	VF 130_100	100	31	28	585	2.5	1500	12600	70	14.0	780	1.8	1500	12600	64	
				n_1 = 900 min^{-1}						n_1 = 500 min^{-1}						
	VF 130_7	7	71	129	850	13.0	1500	6980	88	71	1000	8.8	1500	8670	86	171
	VF 130_10	10	67	90	900	9.9	1500	8900	87	50	1100	6.9	1500	10800	84	
	VF 130_15	15	63	60	1080	8.1	1500	10490	84	33	1350	5.9	1500	12600	81	
	VF 130_20	20	59	45	1050	6.1	1500	12400	82	25.0	1350	4.6	1500	13800	79	
	VF 130_23	23	57	39	1050	5.4	1500	13200	81	21.7	1300	3.9	1500	13800	77	
	VF 130_30	30	49	30.0	1250	5.2	—	13200	77	16.7	1500	3.7	—	13800	72	
	VF 130_40	40	44	22.5	1200	3.9	—	13200	73	12.5	1400	2.8	—	13800	68	
	VF 130_46	46	45	19.6	1150	3.3	490	13200	73	10.9	1350	2.3	1270	13800	68	
	VF 130_56	56	42	16.1	1080	2.7	1500	13200	70	8.9	1200	1.8	1500	13800	65	
	VF 130_64	64	39	14.1	1050	2.4	1500	13200	68	7.8	1200	1.6	1500	13800	62	
	VF 130_80	80	35	11.3	950	1.8	1500	13200	64	6.3	1150	1.3	1500	13800	58	
	VF 130_100	100	31	9.0	800	1.3	1500	13200	59	5.0	900	0.91	1500	13800	54	

1800 Nm

		i	ηs %	n_2 min^{-1}	M_{n2} Nm	P_{n1} kW	R_{n1} N	R_{n2} N	ηd %	n_2 min^{-1}	M_{n2} Nm	P_{n1} kW	R_{n1} N	R_{n2} N	ηd %	
				n_1 = 2800 min^{-1}						n_1 = 1400 min^{-1}						
VFR 130	VFR 130 _60	60	58	47	1050	6.4	1000	12400	81	23.3	1350	4.3	1000	13800	78	173
	VFR 130 _69	69	56	41	1050	5.6	1000	13200	80	20.3	1300	3.7	1000	13800	76	
	VFR 130 _90	90	48	31	1250	5.4	1000	13200	76	15.6	1500	3.5	1000	13800	71	
	VFR 130 _120	120	43	23.3	1200	4.1	1000	13200	72	11.7	1400	2.6	1000	13800	67	
	VFR 130 _138	138	44	20.3	1150	3.4	1000	13200	72	10.1	1350	2.2	1000	13800	67	
	VFR 130 _168	168	41	16.7	1080	2.7	1000	13200	69	8.3	1200	1.6	1000	13800	64	
	VFR 130 _192	192	38	14.6	1050	2.4	1000	13200	67	7.3	1200	1.5	1000	13800	61	
	VFR 130 _240	240	34	11.7	950	1.9	1000	13200	63	5.8	1150	1.2	1000	13800	57	
	VFR 130 _300	300	30	9.3	800	1.4	1000	13200	58	4.7	900	0.83	1000	13800	53	
				n_1 = 900 min^{-1}						n_1 = 500 min^{-1}						
	VFR 130 _60	60	58	15.0	1450	3.1	1000	13800	75	8.3	1600	1.9	1000	13800	74	173
	VFR 130 _69	69	56	13.0	1450	2.7	1000	13800	74	7.2	1550	1.6	1000	13800	72	
	VFR 130 _90	90	48	10.0	1600	2.5	1000	13800	68	5.6	1800	1.6	1000	13800	66	
	VFR 130 _120	120	43	7.5	1600	2.0	1000	13800	63	4.2	1800	1.3	1000	13800	61	
	VFR 130 _138	138	44	6.5	1500	1.6	1000	13800	64	3.6	1600	1.0	1000	13800	61	
	VFR 130 _168	168	41	5.4	1350	1.3	1000	13800	60	3.0	1450	0.78	1000	13800	58	
	VFR 130 _192	192	38	4.7	1300	1.1	1000	13800	58	2.6	1400	0.70	1000	13800	55	
	VFR 130 _240	240	34	3.8	1200	0.87	1000	13800	54	2.1	1250	0.54	1000	13800	51	
	VFR 130 _300	300	30	3.0	1000	0.64	1000	13800	49	1.7	1100	0.41	1000	13800	47	

(–) Contact our technical service department advising radial load data (rotation direction, load angle, offset)

W/VF 63/130

1850 Nm

		i	η_s %	n_2 min^{-1}	M_{n2} Nm	P_{n1} kW	R_{n1} N	R_{n2} N	η_d %	n_2 min^{-1}	M_{n2} Nm	P_{n1} kW	R_{n1} N	R_{n2} N	η_d %	
				n_1 = 1400 min^{-1}						n_1 = 900 min^{-1}						
W/VF 63/130	**W/VF 63/130_280**	280	31	5.0	1800	1.9	480	13800	50	3.2	1850	1.3	480	13800	48	174
	W/VF 63/130_400	400	29	3.5	1800	1.5	480	13800	44	2.3	1850	0.99	480	13800	44	
	W/VF 63/130_600	600	26	2.3	1800	1.1	480	13800	40	1.5	1850	0.73	480	13800	40	
	W/VF 63/130_760	760	24	1.8	1800	0.89	480	13800	39	1.2	1850	0.62	480	13800	37	
	W/VF 63/130_960	960	23	1.5	1800	0.74	480	13800	37	0.94	1850	0.52	480	13800	35	
	W/VF 63/130_1200	1200	19	1.2	1800	0.65	—	13800	34	0.75	1850	0.45	—	13800	32	
	W/VF 63/130_1520	1520	18	0.92	1800	0.55	—	13800	32	0.59	1850	0.38	—	13800	30	
	W/VF 63/130_1800	1800	16	0.78	1800	0.52	—	13800	28	0.50	1850	0.37	—	13800	26	
	W/VF 63/130_2560	2560	14	0.55	1800	0.45	—	13800	23	0.35	1850	0.32	—	13800	21	
	W/VF 63/130_3200	3200	12	0.44	1800	0.49	—	13800	17	0.28	1850	0.34	480	13800	16	

(–) Contact our technical service department advising radial load data (rotation direction, load angle, offset)

Bonfiglioli Riduttori

VF 150 - VFR 150

2000 Nm

		i	ηs %	n_2 min-1	M_{n2} Nm	P_{n1} kW	R_{n1} N	R_{n2} N	ηd %	n_2 min-1	M_{n2} Nm	P_{n1} kW	R_{n1} N	R_{n2} N	ηd %	
				n_1 = 2800 min-1						n_1 = 1400 min-1						
VF 150	VF 150_7	7	72	400	750	35	2200	5010	91	200	1000	24	2200	6040	90	171
	VF 150_10	10	68	280	788	25	2200	6630	90	140	1050	17.5	2200	8120	88	
	VF 150_15	15	64	187	863	19.0	2200	8110	89	93	1150	13.1	2200	9990	87	
	VF 150_20	20	59	140	975	16.4	2200	9170	87	70	1300	11.3	2200	11300	84	
	VF 150_23	23	57	122	953	14.1	2200	9940	86	61	1270	9.8	2200	12300	83	
	VF 150_30	30	48	93	1028	12.1	2200	11100	83	47	1370	8.5	2200	13700	80	
	VF 150_40	40	44	70	1155	10.5	2200	12300	81	35	1540	7.4	830	14700	77	
	VF 150_46	46	45	61	1163	9.2	2200	13100	81	30.0	1550	6.5	1400	14700	77	
	VF 150_56	56	42	50	1028	6.8	2200	14600	79	25.0	1370	4.9	2200	14700	74	
	VF 150_64	64	39	44	998	5.9	2200	14700	77	21.9	1330	4.2	2200	14700	72	
	VF 150_80	80	35	35	938	4.6	2200	14700	74	17.5	1250	3.4	2200	14700	69	
	VF 150_100	100	31	28	863	3.6	2200	14700	71	14.0	1150	2.6	2200	14700	65	
				n_1 = 900 min-1						n_1 = 500 min-1						
	VF 150_7	7	72	129	1150	17.6	2200	7040	89	71	1400	12.2	2200	8560	87	171
	VF 150_10	10	68	90	1200	13.0	2200	9480	87	50	1500	9.4	2200	11400	85	
	VF 150_15	15	64	60	1350	10.0	2200	11500	85	33	1700	7.3	2200	13800	83	
	VF 150_20	20	59	45	1500	8.6	2200	13100	83	25.0	1900	6.4	2200	15700	80	
	VF 150_23	23	57	39	1500	7.6	2200	14200	82	21.7	1850	5.5	2200	16000	78	
	VF 150_30	30	48	30.0	1600	6.5	2200	15500	77	16.7	1950	4.8	2200	16000	73	
	VF 150_40	40	44	22.5	1750	5.6	1150	15500	74	12.5	2000	3.9	2200	16000	69	
	VF 150_46	46	45	19.6	1750	4.9	2100	15500	74	10.9	2000	3.4	2200	16000	69	
	VF 150_56	56	42	16.1	1500	3.7	2200	15500	71	8.9	1750	2.6	2200	16000	66	
	VF 150_64	64	39	14.1	1450	3.2	2200	15500	69	7.8	1700	2.3	2200	16000	63	
	VF 150_80	80	35	11.3	1350	2.5	2200	15500	65	6.3	1550	1.8	2200	16000	59	
	VF 150_100	100	31	9.0	1150	1.8	2200	15500	61	5.0	1300	1.3	2200	16000	55	

2600 Nm

		i	ηs %	n_2 min-1	M_{n2} Nm	P_{n1} kW	R_{n1} N	R_{n2} N	ηd %	n_2 min-1	M_{n2} Nm	P_{n1} kW	R_{n1} N	R_{n2} N	ηd %	
				n_1 = 2800 min-1						n_1 = 1400 min-1						
VFR 150	VFR 150 _45	45	63	62	1350	10.6	1500	11600	84	31	1700	6.8	1500	14600	82	173
	VFR 150 _60	60	58	47	1500	9.0	1500	13100	82	23.3	1900	5.9	1500	16000	79	
	VFR 150 _69	69	56	41	1500	7.9	1500	14100	81	20.3	1850	5.1	1500	16000	77	
	VFR 150 _90	90	47	31	1600	6.9	1500	15500	76	15.6	1950	4.4	1500	16000	72	
	VFR 150 _120	120	43	23.3	1750	5.9	1500	15500	73	11.7	2000	3.6	1500	16000	68	
	VFR 150 _138	138	44	20.3	1750	5.1	1500	15500	73	10.1	2000	3.1	1500	16000	68	
	VFR 150 _168	168	41	16.7	1500	3.8	1500	15500	70	8.3	1750	2.4	1500	16000	65	
	VFR 150 _192	192	38	14.6	1450	3.3	1500	15500	68	7.3	1700	2.1	1500	16000	62	
	VFR 150 _240	240	34	11.7	1350	2.6	1500	15500	64	5.8	1550	1.6	1500	16000	58	
	VFR 150 _300	300	30	9.3	1150	1.9	1500	15500	60	4.7	1300	1.2	1500	16000	54	
				n_1 = 900 min-1						n_1 = 500 min-1						
	VFR 150 _45	45	63	20.0	1950	5.2	1500	16000	79	11.1	2100	3.2	1500	16000	78	173
	VFR 150 _60	60	58	15.0	2100	4.4	1500	16000	76	8.3	2300	2.7	1500	16000	74	
	VFR 150 _69	69	56	13.0	2050	3.8	1500	16000	74	7.2	2200	2.3	1500	16000	72	
	VFR 150 _90	90	47	10.0	2200	3.4	1500	16000	69	5.6	2400	2.1	1500	16000	66	
	VFR 150 _120	120	43	7.5	2300	2.8	1500	16000	64	4.2	2600	1.8	1500	16000	62	
	VFR 150 _138	138	44	6.5	2200	2.4	1500	16000	64	3.6	2400	1.5	1500	16000	62	
	VFR 150 _168	168	41	5.4	1950	1.8	1500	16000	61	3.0	2100	1.1	1500	16000	59	
	VFR 150 _192	192	38	4.7	1900	1.6	1500	16000	59	2.6	2000	1.0	1500	16000	56	
	VFR 150 _240	240	34	3.8	1700	1.2	1500	16000	54	2.1	1800	0.76	1500	16000	52	
	VFR 150 _300	300	30	3.0	1350	0.85	1500	16000	50	1.7	1450	0.54	1500	16000	47	

W/VF 86/150

2700 Nm

		i	η_s %	n_2 min^{-1}	M_{n2} Nm	P_{n1} kW	R_{n1} N	R_{n2} N	η_d %	n_2 min^{-1}	M_{n2} Nm	P_{n1} kW	R_{n1} N	R_{n2} N	η_d %	
				n_1 = 1400 min^{-1}						n_1 = 900 min^{-1}						
W/VF 86/150	**W/VF 86/150_200**	200	29	7.0	2600	3.0	850	16000	64	4.5	2700	2.1	850	16000	61	174
	W/VF 86/150_225	225	26	6.2	2600	2.7	850	16000	63	4.0	2700	1.9	850	16000	60	
	W/VF 86/150_300	300	26	4.7	2600	2.2	850	16000	58	3.0	2700	1.5	850	16000	57	
	W/VF 86/150_345	345	26	4.1	2600	1.9	850	16000	58	2.6	2700	1.3	850	16000	57	
	W/VF 86/150_460	460	26	3.0	2600	1.5	850	16000	55	2.0	2700	1.0	850	16000	55	
	W/VF 86/150_529	529	26	2.6	2600	1.3	850	16000	55	1.7	2700	0.93	850	16000	52	
	W/VF 86/150_690	690	26	2.0	2600	1.1	850	16000	50	1.3	2700	0.78	850	16000	47	
	W/VF 86/150_920	920	26	1.5	2600	0.92	850	16000	45	0.98	2700	0.64	850	16000	43	
	W/VF 86/150_1380	1380	19	1.0	2600	0.66	850	16000	42	0.65	2700	0.46	850	16000	40	
	W/VF 86/150_1840	1840	19	0.76	2600	0.55	850	16000	38	0.49	2700	0.38	850	16000	36	
	W/VF 86/150_2944	2944	16	0.48	2600	0.48	850	16000	27	0.31	2700	0.35	850	16000	25	

VF 185 - VFR 185

3600 Nm

		i	ηs %	n_2 min-1	M_{n2} Nm	P_{n1} kW	R_{n1} N	R_{n2} N	ηd %	n_2 min-1	M_{n2} Nm	P_{n1} kW	R_{n1} N	R_{n2} N	ηd %	
				n_1 = 2800 min-1						n_1 = 1400 min-1						
VF 185	VF 185_7	7	72	400	1313	60	2800	4670	91	200	1750	41	2800	5570	90	171
	VF 185_10	10	68	280	1365	44	2800	7390	90	140	1820	30	2800	8960	89	
	VF 185_15	15	66	187	1388	30	2800	9460	89	93	1850	21	2800	11600	88	
	VF 185_20	20	59	140	1703	28	2800	10500	88	70	2270	19.6	2800	12900	85	
	VF 185_30	30	54	93	1485	16.9	2800	13700	86	47	1980	11.8	2800	16900	83	
	VF 185_40	40	44	70	1973	17.6	—	14500	82	35	2630	12.4	—	17900	78	
	VF 185_50	50	41	56	1875	13.7	—	16300	80	28.0	2500	9.8	—	18000	76	
	VF 185_60	60	39	47	1703	10.7	2800	18000	78	23.3	2270	7.6	770	18000	74	
	VF 185_80	80	33	35	1590	7.8	2800	18000	75	17.5	2120	5.6	1140	18000	69	
	VF 185_100	100	30	28.0	1425	5.8	2800	18000	72	14.0	1900	4.3	2800	18000	65	
				n_1 = 900 min-1						n_1 = 500 min-1						
	VF 185_7	7	72	129	2000	30	2800	7120	89	71	2450	21	2800	8730	88	171
	VF 185_10	10	68	90	2150	23	2800	10200	88	50	2600	16.0	2800	12500	86	
	VF 185_15	15	66	60	2250	16.4	2800	13100	86	33	2800	11.8	2800	15700	84	
	VF 185_20	20	59	45	2750	15.6	2800	14600	84	25.0	3300	10.9	2800	17900	81	
	VF 185_30	30	54	30.0	2400	9.4	2800	19000	81	16.7	2800	6.5	2800	19500	77	
	VF 185_40	40	44	22.5	3100	9.7	—	19000	76	12.5	3600	6.8	—	19500	71	
	VF 185_50	50	41	18.0	2900	7.6	—	19000	73	10.0	3300	5.2	—	19500	68	
	VF 185_60	60	39	15.0	2600	5.8	700	19000	71	8.3	3000	4.2	2800	19500	66	
	VF 185_80	80	33	11.3	2400	4.3	1770	19000	66	6.3	2800	3.2	2800	19500	60	
	VF 185_100	100	30	9.0	2000	3.0	2800	19000	62	5.0	2300	2.1	2800	19500	56	

4200 Nm

		i	ηs %	n_2 min-1	M_{n2} Nm	P_{n1} kW	R_{n1} N	R_{n2} N	ηd %	n_2 min-1	M_{n2} Nm	P_{n1} kW	R_{n1} N	R_{n2} N	ηd %	
				n_1 = 2800 min-1						n_1 = 1400 min-1						
VFR 185	VFR 185 _90	90	53	31	2400	9.9	1700	19000	80	15.6	2800	6.0	1700	19500	76	173
	VFR 185 _120	120	43	23.3	3100	10.2	1700	19000	75	11.7	3600	6.3	1700	19500	70	
	VFR 185 _150	150	40	18.7	2900	7.9	1700	19000	72	9.3	3300	4.8	1700	19500	67	
	VFR 185 _180	180	38	15.6	2600	6.1	1700	19000	70	7.8	3000	3.8	1700	19500	65	
	VFR 185 _240	240	32	11.7	2400	4.5	1700	19000	65	5.8	2800	2.9	1700	19500	59	
	VFR 185 _300	300	29	9.3	2000	3.2	1700	19000	61	4.7	2300	2.0	1700	19500	55	
				n_1 = 900 min-1						n_1 = 500 min-1						
	VFR 185 _90	90	53	10.0	3200	4.6	1700	19500	73	5.6	3500	2.9	1700	19500	71	173
	VFR 185 _120	120	43	7.5	3800	4.5	1700	19500	66	4.2	4200	2.9	1700	19500	63	
	VFR 185 _150	150	40	6.0	3400	3.4	1700	19500	63	3.3	3700	2.2	1700	19500	60	
	VFR 185 _180	180	38	5.0	3300	2.9	1700	19500	60	2.8	3600	1.8	1700	19500	57	
	VFR 185 _240	240	32	3.8	2800	2.0	1700	19500	54	2.1	2900	1.2	1700	19500	53	
	VFR 185 _300	300	29	3.0	2400	1.5	1700	19500	50	1.7	2500	0.91	1700	19500	48	

(–) Contact our technical service department advising radial load data (rotation direction, load angle, offset)

W/VF 86/185

4400 Nm

		i	η_s %	n_2 min^{-1}	M_{n2} Nm	P_{n1} kW	R_{n1} N	R_{n2} N	η_d %	n_2 min^{-1}	M_{n2} Nm	P_{n1} kW	R_{n1} N	R_{n2} N	η_d %	
				n_1 = 1400 min^{-1}						n_1 = 900 min^{-1}						
W/VF 86/185	**W/VF 86/185_280**	280	31	5.0	4200	4.2	850	19500	52	3.2	4400	3.0	850	19500	49	174
	W/VF 86/185_400	400	29	3.5	4200	3.2	850	19500	48	2.3	4400	2.3	850	19500	45	
	W/VF 86/185_600	600	26	2.3	4200	2.3	850	19500	45	1.5	4400	1.6	850	19500	43	
	W/VF 86/185_800	800	26	1.8	4200	1.8	850	19500	43	1.1	4400	1.3	850	19500	40	
	W/VF 86/185_920	920	26	1.5	4200	1.6	850	19500	42	1.0	4400	1.2	850	19500	38	
	W/VF 86/185_1200	1200	20	1.2	4200	1.5	850	19500	34	0.75	4400	0.99	850	19500	35	
	W/VF 86/185_1600	1600	20	0.88	4200	1.1	850	19500	35	0.56	4400	0.79	850	19500	33	
	W/VF 86/185_1840	1840	19	0.76	4200	0.98	850	19500	34	0.49	4400	0.70	850	19500	32	
	W/VF 86/185_2560	2560	16	0.55	4200	0.83	850	19500	29	0.35	4400	0.60	850	19500	27	
	W/VF 86/185_3200	3200	15	0.44	4200	0.80	850	19500	24	0.28	4400	0.59	850	19500	22	

Bonfiglioli Riduttori

VF 210 - VFR 210

5000 Nm

		i	ηs %	n_2 min-1	M_{n2} Nm	P_{n1} kW	R_{n1} N	R_{n2} N	η_d %	n_2 min-1	M_{n2} Nm	P_{n1} kW	R_{n1} N	R_{n2} N	η_d %	
				n_1 = 2800 min-1						n_1 = 1400 min-1						
VF 210	VF 210_7	7	71	400	1725	79	5300	14000	91	200	2300	54	5300	16700	90	171
	VF 210_10	10	69	280	1988	65	5300	16300	90	140	2650	44	5300	19500	89	
	VF 210_15	15	63	187	2138	47	5300	19700	89	93	2850	32	5300	23700	88	
	VF 210_20	20	57	140	2325	39	4970	22000	87	70	3100	27	1100	26600	85	
	VF 210_30	30	51	93	2288	26	5300	25900	85	47	3050	18.5	1760	31500	83	
	VF 210_40	40	42	70	2625	23	—	28300	81	35	3500	17.0	—	31500	78	
	VF 210_50	50	39	56	2475	18.4	—	31000	79	28.0	3300	13.0	—	31500	76	
	VF 210_60	60	36	47	2363	15.0	—	31500	77	23.3	3015	10.0	—	31500	73	
	VF 210_80	80	31	35	2175	10.9	—	31500	73	17.5	2900	7.7	—	31500	69	
	VF 210_100	100	27	28	2025	8.5	950	31500	70	14.0	2700	6.0	—	31500	65	
				n_1 = 900 min-1						n_1 = 500 min-1						
	VF 210_7	7	71	129	2700	41	5300	18800	89	71	3400	29	5300	21800	88	171
	VF 210_10	10	69	90	3150	34	5300	21900	88	50	3800	23	5300	26000	87	
	VF 210_15	15	63	60	3300	24	5300	27000	86	33	4100	17.2	5300	31800	84	
	VF 210_20	20	57	45	3800	22	—	29900	83	25.0	4700	15.4	—	34500	81	
	VF 210_30	30	51	30.0	3400	13.4	3750	33000	80	16.7	4000	9.3	5300	34500	77	
	VF 210_40	40	42	22.5	4300	13.5	—	33000	75	12.5	5000	9.4	—	34500	71	
	VF 210_50	50	39	18.0	4000	10.5	—	33000	72	10.0	4500	7.1	—	34500	68	
	VF 210_60	60	36	15.0	3720	8.5	—	33000	70	8.3	4300	6.0	—	34500	65	
	VF 210_80	80	31	11.3	3300	6.0	—	33000	65	6.3	3900	4.4	—	34500	60	
	VF 210_100	100	27	9.0	3000	4.6	—	33000	61	5.0	3400	3.4	1470	34500	56	

6300 Nm

		i	ηs %	n_2 min-1	M_{n2} Nm	P_{n1} kW	R_{n1} N	R_{n2} N	η_d %	n_2 min-1	M_{n2} Nm	P_{n1} kW	R_{n1} N	R_{n2} N	η_d %	
				n_1 = 2800 min-1						n_1 = 1400 min-1						
VFR 210	VFR 210 _30	30	68	93	3150	36	1800	22100	87	47	3800	21.8	2200	27400	86	173
	VFR 210 _45	45	62	62	3300	25	1800	27000	85	31	4100	16.2	2200	33200	83	
	VFR 210 _60	60	56	47	3800	22	1800	29900	82	23.0	4700	14.5	2200	34500	80	
	VFR 210 _90	90	50	31	3400	14.1	1800	33000	79	15.6	4000	8.6	2200	34500	76	
	VFR 210 _120	120	41	23.3	4300	14.3	1800	33000	74	11.7	5000	8.8	2200	34500	70	
	VFR 210 _150	150	38	18.7	4000	11.1	1800	33000	71	9.3	4500	6.6	2200	34500	67	
	VFR 210 _180	180	35	15.6	3720	8.8	1800	33000	69	7.8	4300	5.5	2200	34500	64	
	VFR 210 _240	240	30	11.7	3300	6.3	1800	33000	64	5.8	3900	4.1	2200	34500	59	
	VFR 210 _300	300	26	9.3	3000	4.9	1800	33000	60	4.7	3400	3.0	2200	34500	55	
				n_1 = 900 min-1						n_1 = 500 min-1						
	VFR 210 _30	30	68	30.0	4800	18.1	2300	30100	84	16.7	5500	11.8	2650	34500	82	173
	VFR 210 _45	45	62	20.0	4900	12.9	2300	34500	80	11.1	5600	8.4	2650	34500	78	
	VFR 210 _60	60	56	15.0	5400	11.1	2300	34500	77	8.3	6000	7.1	2650	34500	74	
	VFR 210 _90	90	50	10.0	4600	6.7	2300	34500	72	5.6	5150	4.3	2650	34500	70	
	VFR 210 _120	120	41	7.5	5900	7.1	2300	34500	66	4.2	6300	4.4	2650	34500	63	
	VFR 210 _150	150	38	6.0	5300	5.4	2300	34500	62	3.3	5900	3.5	2650	34500	59	
	VFR 210 _180	180	35	5.0	4900	4.4	2300	34500	59	2.8	5400	2.8	2650	34500	56	
	VFR 210 _240	240	30	3.8	4400	3.2	2300	34500	54	2.1	4800	2.1	2650	34500	50	
	VFR 210 _300	300	26	3.0	3600	2.3	2300	34500	49	1.7	4000	1.5	2650	34500	46	

(–) Contact our technical service department advising radial load data (rotation direction, load angle, offset)

VF/VF 130/210

6500 Nm

		i	η_s %	n_2 min^{-1}	M_{n2} Nm	P_{n1} kW	R_{n1} N	R_{n2} N	η_d %	n_2 min^{-1}	M_{n2} Nm	P_{n1} kW	R_{n1} N	R_{n2} N	η_d %	
				n_1 = 1400 min^{-1}						n_1 = 900 min^{-1}						
VF/VF 130/210	**VF/VF 130/210_280**	280	30	5.0	6300	6.3	1500	34500	52	3.2	6500	4.4	1500	34500	50	174
	VF/VF 130/210_400	400	28	3.5	6300	4.6	1500	34500	50	2.3	6500	3.2	1500	34500	48	
	VF/VF 130/210_600	600	26	2.3	6300	3.6	1500	34500	43	1.5	6500	2.4	1500	34500	43	
	VF/VF 130/210_800	800	25	1.8	6300	2.8	1500	34500	41	1.1	6500	2.0	1500	34500	38	
	VF/VF 130/210_920	920	24	1.5	6300	2.7	1500	34500	37	1.0	6500	1.9	1500	34500	35	
	VF/VF 130/210_1200	1200	21	1.2	6300	2.2	—	34500	35	0.75	6500	1.5	—	34500	34	
	VF/VF 130/210_1600	1600	18	0.88	6300	1.8	—	34500	32	0.56	6500	1.2	—	34500	32	
	VF/VF 130/210_1840	1840	19	0.76	6300	1.7	—	34500	30	0.49	6500	1.2	490	34500	28	
	VF/VF 130/210_2560	2560	16	0.55	6300	1.5	1220	34500	24	0.35	6500	1.0	1500	34500	24	
	VF/VF 130/210_3200	3200	15	0.44	6300	1.3	1500	34500	22	0.28	6500	0.96	1500	34500	20	

(–) Contact our technical service department advising radial load data (rotation direction, load angle, offset)

Bonfiglioli Riduttori

VF 250 - VFR 250

7100 Nm

		i	ηs %	n_2 min-1	M_{n2} Nm	P_{n1} kW	R_{n1} N	R_{n2} N	ηd %	n_2 min-1	M_{n2} Nm	P_{n1} kW	R_{n1} N	R_{n2} N	ηd %	
				n_1 = 2800 min-1						n_1 = 1400 min-1						
VF 250	VF 250_7	7	71	400	2400	109	7000	18300	92	200	3200	75	7000	21900	91	171
	VF 250_10	10	69	280	2775	89	7000	21100	91	140	3700	61	7000	25300	90	
	VF 250_15	15	64	187	3000	65	7000	25100	90	93	4000	45	7000	30300	88	
	VF 250_20	20	59	140	3338	56	7000	28000	88	70	4450	38	7000	33900	86	
	VF 250_30	30	53	93	3000	34	7000	33400	86	47	4000	23	7000	40600	84	
	VF 250_40	40	41	70	3600	32	4680	36200	82	35	4800	22	—	44000	79	
	VF 250_50	50	36	56	3375	25	6370	39500	79	28.0	4500	17.0	—	47000	76	
	VF 250_60	60	38	47	3375	20.6	7000	42100	80	23.3	4500	15.0	—	47000	76	
	VF 250_80	80	32	35	2925	14.1	7000	47000	76	17.5	3900	10.0	—	47000	71	
	VF 250_100	100	29	28	2738	11.0	7000	47000	73	14.0	3650	7.8	3010	47000	68	
				n_1 = 900 min-1						n_1 = 500 min-1						
	VF 250_7	7	71	129	4150	63	7000	23700	90	71	5200	44	7000	27600	88	171
	VF 250_10	10	69	90	4800	51	7000	27600	89	50	6000	36	7000	32300	87	
	VF 250_15	15	64	60	5300	39	7000	33200	87	33	6400	27	7000	39500	85	
	VF 250_20	20	59	45	5950	33	1640	37200	85	25.0	7100	24	1910	44400	82	
	VF 250_30	30	53	30.0	5500	21	7000	44900	81	16.7	6000	14.7	7000	52000	79	
	VF 250_40	40	41	22.5	6500	20.0	—	48800	76	12.5	7000	13.6	—	52000	72	
	VF 250_50	50	36	18.0	6200	16.2	—	50000	73	10.0	6500	11.1	—	52000	68	
	VF 250_60	60	38	15.0	5600	12.2	—	50000	72	8.3	6300	8.6	4350	52000	68	
	VF 250_80	80	32	11.3	5200	9.3	—	50000	67	6.3	5400	6.8	7000	52000	62	
	VF 250_100	100	29	9.0	4800	7.2	3010	50000	63	5.0	5000	5.3	4160	52000	58	

9000 Nm

		i	ηs %	n_2 min-1	M_{n2} Nm	P_{n1} kW	R_{n1} N	R_{n2} N	ηd %	n_2 min-1	M_{n2} Nm	P_{n1} kW	R_{n1} N	R_{n2} N	ηd %	
				n_1 = 2800 min-1						n_1 = 1400 min-1						
VFR 250	VFR 250 _30	30	68	93	4800	54	2800	27800	89	47	6000	34	3500	34000	86	173
	VFR 250 _45	45	63	62	5300	41	2800	33300	87	31	6400	25	3500	41300	84	
	VFR 250 _60	60	58	47	5950	35	2800	37200	85	23.0	7100	21	3500	46100	81	
	VFR 250 _90	90	52	31	5500	22	2800	44700	81	15.6	6000	12.6	3500	52000	78	
	VFR 250 _120	120	40	23.3	6500	21.3	2800	48500	76	11.7	7000	12.1	3500	52000	71	
	VFR 250 _150	150	35	18.7	6200	16.9	2800	50000	73	9.3	6500	9.5	3500	52000	67	
	VFR 250 _180	180	37	15.6	5600	12.9	2800	50000	72	7.8	6300	7.7	3500	52000	67	
	VFR 250 _240	240	31	11.7	5200	9.7	2800	50000	67	5.8	5400	5.4	3500	52000	61	
	VFR 250 _300	300	28	9.3	4800	7.6	2800	50000	63	4.7	5000	4.3	3500	52000	57	
				n_1 = 900 min-1						n_1 = 500 min-1						
	VFR 250 _30	30	68	30.0	6500	24	3700	39600	84	16.7	7600	16.1	4200	47600	83	173
	VFR 250 _45	45	63	20.0	6800	17.5	3700	48000	82	11.1	7900	11.6	3500	52000	80	
	VFR 250 _60	60	58	15.0	7600	15.2	3700	52000	79	8.3	8600	9.9	3500	52000	76	
	VFR 250 _90	90	52	10.0	6500	9.3	3700	52000	74	5.6	7400	6.1	3500	52000	71	
	VFR 250 _120	120	40	7.5	7500	8.8	3700	52000	67	4.2	9000	6.2	3500	52000	64	
	VFR 250 _150	150	35	6.0	7000	7.0	3700	52000	63	3.3	8600	5.1	3500	52000	59	
	VFR 250 _180	180	37	5.0	6700	5.7	3700	52000	62	2.8	7600	3.8	3500	52000	59	
	VFR 250 _240	240	31	3.8	5800	4.1	3700	52000	56	2.1	6500	2.7	3500	52000	52	
	VFR 250 _300	300	28	3.0	5300	3.2	3700	52000	52	1.7	6000	2.2	3500	52000	48	

(–) Contact our technical service department advising radial load data (rotation direction, load angle, offset)

VF/VF 130/250

9200 Nm

		i	η_s %	n_2 min^{-1}	M_{n2} Nm	P_{n1} kW	R_{n1} N	R_{n2} N	η_d %	n_2 min^{-1}	M_{n2} Nm	P_{n1} kW	R_{n1} N	R_{n2} N	η_d %	
				n_1 = 1400 min^{-1}						n_1 = 900 min^{-1}						
VF/VF 130/250	**VF/VF 130/250_280**	280	29	5.0	9000	8.9	1500	52000	53	3.2	9200	6.1	1500	52000	51	174
	VF/VF 130/250_400	400	27	3.5	9000	6.7	1500	52000	49	2.3	9200	4.6	1500	52000	47	
	VF/VF 130/250_600	600	26	2.3	9000	5.0	1500	52000	44	1.5	9200	3.4	1500	52000	43	
	VF/VF 130/250_800	800	24	1.8	9000	3.9	1500	52000	42	1.1	9200	2.7	1500	52000	40	
	VF/VF 130/250_920	920	23	1.5	9000	3.9	1500	52000	37	0.98	9200	2.7	1500	52000	35	
	VF/VF 130/250_1200	1200	20	1.2	9000	3.1	—	52000	35	0.75	9200	2.2	—	52000	33	
	VF/VF 130/250_1600	1600	18	0.88	9000	2.6	—	52000	32	0.56	9200	1.8	—	52000	30	
	VF/VF 130/250_1840	1840	18	0.76	9000	2.3	—	52000	31	0.49	9200	1.6	490	52000	29	
	VF/VF 130/250_2560	2560	16	0.55	9000	2.1	1500	52000	25	0.35	9200	1.5	1500	52000	23	
	VF/VF 130/250_3200	3200	14	0.44	9000	2.0	1500	52000	21	0.28	9200	1.4	1500	52000	19	

(–) Contact our technical service department advising radial load data (rotation direction, load angle, offset)

Bonfiglioli Riduttori

23 RATIO DISTRIBUTION FOR VF/VF, VF/W, W/VF SERIES GEARBOXES

	Ratios											i max
VF/VF 30/44	**245**	**350**	**420**	**560**	**700**	**840**	**1120**	**1680**	**2100**			**6000**
VF 30	7	10	15	20	20	30	40	60	60			60
VF 44	35	35	28	28	35	28	28	28	35			100
VF/VF 30/49	**240**	**315**	**420**	**540**	**720**	**900**	**1120**	**1440**	**2160**	**2700**		**6000**
VF 30	10	7	15	15	20	20	40	40	60	60		60
VF 49	24	45	28	36	36	45	28	36	36	45		100
VF/W 30/63	**240**	**315**	**450**	**570**	**720**	**900**	**1200**	**1520**	**2280**	**2700**		**7000**
VF 30	10	7	15	15	30	30	40	40	60	60		70
W 63	24	45	30	38	24	30	30	38	38	45		100
VF/W 44/75	**250**	**300**	**400**	**525**	**700**	**920**	**1200**	**1500**	**2100**	**2800**		**10000**
VF 44	10	10	10	35	35	46	60	60	70	70		100
W 75	25	30	40	15	20	20	20	25	30	40		100
VF/W 44/86	**230**	**300**	**400**	**525**	**700**	**920**	**1380**	**1840**	**2116**	**2760**		**10000**
VF 44	10	10	10	35	35	46	46	46	46	60		100
W 86	23	30	40	15	20	20	30	40	46	46		100
VF/W 49/110	**230**	**300**	**400**	**540**	**720**	**1080**	**1350**	**1656**	**2070**	**2800**		**10000**
VF 49	10	10	10	18	36	36	45	36	45	70		100
W 110	23	30	40	30	20	30	30	46	46	40		100
W/VF 63/130	**280**	**400**	**600**	**760**	**960**	**1200**	**1520**	**1800**	**2560**	**3200**		**10000**
W 63	7	10	15	19	24	30	38	45	64	80		100
VF 130	40	40	40	40	40	40	40	40	40	40		100
W/VF 86/150	**200**	**225**	**300**	**345**	**460**	**529**	**690**	**920**	**1380**	**1840**	**2944**	**10000**
W 86	10	15	15	15	20	23	23	23	46	46	64	100
VF 150	20	15	20	23	23	23	30	40	30	40	46	100
W/VF 86/185	**280**	**400**	**600**	**800**	**920**	**1200**	**1600**	**1840**	**2560**	**3200**		**10000**
W 86	7	10	15	20	23	30	40	46	64	80		100
VF 185	40	40	40	40	40	40	40	40	40	40		100
VF/VF 130/210	**280**	**400**	**600**	**800**	**920**	**1200**	**1600**	**1840**	**2560**	**3200**		**10000**
VF 130	7	10	15	20	23	30	40	46	64	80		100
VF 210	40	40	40	40	40	40	40	40	40	40		100
VF/VF 130/250	**280**	**400**	**600**	**800**	**920**	**1200**	**1600**	**1840**	**2560**	**3200**		**10000**
VF 130	7	10	15	20	23	30	40	46	64	80		100
VF 250	40	40	40	40	40	40	40	40	40	40		100

The ratio combinations that are listed in the chart are those recommended by the manufacturer.

If requested, the Bonfiglioli Technical Service will consider feasibility of combinations that are not listed, as long as these are lower in value than maximum ratio listed in the chart.

24 MOTOR AVAILABILITY

24.1 Motors to IEC standard

Motor-gearbox combinations resulting from charts are purely based on geometrical compatibility.
When selecting a gearmotor, refer to procedure specified at para: "Selection" and observe particularly the condition S ≥ f_S.

IEC		VF 27	VF 30	VF 44	VF 49	W 63	W 75	W 86	W 110	VF 130	VF 150	VF 185	VF 210	VF 250
P27	—	7...70	—	—	—	—	—	—	—	—	—	—	—	—
P56	B5	—	7...70	—	—	—	—	—	—	—	—	—	—	—
	B14													
P63	B5	—	7...60	7...100	7...100	—	—	—	—	—	—	—	—	—
	B14													
P71	B5	—	—	7...35	7...60	7...100	7...100	7...100	—	—	—	—	—	—
	B14						—	—						
P80	B5	—	—	—	7...28	7...100	7...100	7...100	7...100	—	—	—	—	—
	B14													
P90	B5	—	—	—	—	7...30	7...100	7...100	7...100	46...100	—	—	—	—
	B14									—				
P100	B5	—	—	—	—	—	7...100	7...100	7...100	7...80	23...100	50...100	—	—
	B14									—	—	—		
P112	B5	—	—	—	—	—	7...100	7...100	7...100	7...80	23...100	50...100	—	—
	B14									—	—	—		
P132	B5	—	—	—	—	—	—	—	7...100	7...40 #	7...46	30...80	7...100	7...100
P160	B5	—	—	—	—	—	—	—	—	—	7...20 #	15...40	7...100	7...100
P180	B5	—	—	—	—	—	—	—	—	—	—	7...20 #	7...100	7...100
P200	B5	—	—	—	—	—	—	—	—	—	—	—	7...100	7...100
P225	B5	—	—	—	—	—	—	—	—	—	—	—	7...100	7...100

IEC		VFR 44	VFR 49	WR 63	WR 75	WR 86	WR 110	VFR 130	VFR 150	VFR 185	VFR 210	VFR 250
S44	—	70...500	—	—	—	—	—	—	—	—	—	—
P63	B5	—	30...300	21...300	21...300	21...300	—	—	—	—	—	—
P71	B5	—	—	21...300	21...300	21...300	21...300	—	—	—	—	—
P80	B5	—	—	—	21...300	21...300	21...300	30...300	—	—	—	—
P90	B5	—	—	—	15...150	15...150	21...300	30...300	30...300 ⛔ (37.5;50)	30...300 (37.5;50) ⛔ (75;100)	—	—
P100	B5	—	—	—	—	—	21...300	30...300 #	30...300 ⛔ (37.5;50)	30...300 (37.5;50) ⛔ (75;100)	30...300	30...300
P112	B5	—	—	—	—	—	21...300	30...300 #	30...300 ⛔ (37.5;50)	30...300 (37.5;50) ⛔ (75;100)	30...300	30...300
P132	B5	—	—	—	—	—	—	—	25...50 # ⛔ (30;45)	25...100 # (30;45) ⛔ (60;90)	30...300	30...300
P160	B5	—	—	—	—	—	—	—	—	—	30...300 #	30...300 #

Gear ratio of the helical pre-stage i = 1.5

Motor-gearbox combinations marked with [#] feature a lowered key, supplied with the gearbox.

IEC		VF/VF 30/44	VF/VF 30/49	VF/W 30/63	VF/W 44/75	VF/W 44/86	VF/W 49/110	W/VF 63/130	W/VF 86/150	W/VF 86/185	VF/VF 130/210	VF/VF 130/250
P56	B5	245...2100	240...2700	240...2700	—	—	—	—	—	—	—	—
	B14											
P63	B5	245...2100	240...2700	240...2700	250...2800	230...2760	230...2800	—	—	—	—	—
	B14											
P71	B5	—	—	—	250...700	230...700	230...2400	280...3200	200...2944	280...3200	—	—
	B14								—	—		
P80	B5	—	—	—	—	—	230...540	280...3200	200...2944	280...3200	—	—
	B14											
P90	B5	—	—	—	—	—	—	280...1200	200...2944	280...3200	280...3200	280...3200
	B14										—	—
P100	B5	—	—	—	—	—	—	—	200...2944	280...3200	280...3200	280...3200
	B14										—	—
P112	B5	—	—	—	—	—	—	—	200...2944	280...3200	280...3200	280...3200
	B14										—	—
P132	B5	—	—	—	—	—	—	—	—	—	280...1600 #	280...1600 #

Motor-gearbox combinations marked with [#] feature a lowered key, supplied with the reducer.

24.2 Compact motor

	M1	M2	M3
W 63	7 ... 100	7 ... 100	⊖
W 75	7 ... 100	7 ... 100	7 ... 100
W 86	7 ... 100	7 ... 100	7 ... 100
W 110	⊖	7 ... 100	7 ... 100

	M1	M2	M3
W/VF 63/130	280 ... 3200	280 ... 3200	⊖
W/VF 86/150	200 ... 2944	200 ... 2944	200 ... 2944
W/VF 86/185	280 ... 3200	280 ... 3200	280 ... 3200

24.3 Maximum installable power on input P_

		IEC_ BN (IM B5) (IM B14)										
		P63	P71	P80	P90	P100	P112	P132	P160	P180	P200	P225
		BN										IEC
[kW]	**2p**	0.37	0.75	1.5	2.2	4	4	9.2	18.5	22	30	45
	4p	0.25	0.55	1.1	1.85	3	4	9.2	15	22	30	47
	6p	0.12	0.37	0.75	1.1	1.85	2.2	5.5	11	15	18.5	30

24.4 Motors not to IEC standard

For coupling with non-normalized electric motors, the motor coupling end of VF and W speed reducers may be configured with hybrid (i.e., non IEC) input shaft and flange combinations.
Shaft and flange combinations are illustrated below. The table shows the diameters in millimetres for each selection.

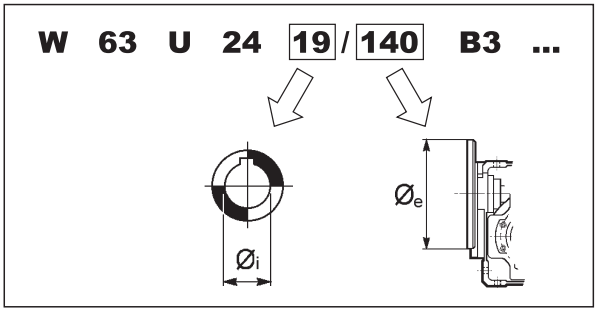

The following table lists available configurations, as well as their limited ranges of gear ratios.

		Øe						
	Øi	80	90	105	120	140	160	200
VF 30	9		7 ≤ i ≤ 70	⊖		7 ≤ i ≤ 70	⊖	⊖
	11	7 ≤ i ≤ 60		⊖	7 ≤ i ≤ 60		⊖	⊖
VF 44	HS	⊖	7 ≤ i ≤ 100	7 ≤ i ≤ 100	⊖	7 ≤ i ≤ 100	7 ≤ i ≤ 100	⊖
	11	⊖		7 ≤ i ≤ 100	⊖		7 ≤ i ≤ 100	⊖
	14	⊖	7 ≤ i ≤ 35		⊖	7 ≤ i ≤ 35		⊖
VF 49	HS	⊖	7 ≤ i ≤ 100	7 ≤ i ≤ 100	7 ≤ i ≤ 100	7 ≤ i ≤ 100	7 ≤ i ≤ 100	7 ≤ i ≤ 100
	11	⊖		7 ≤ i ≤ 100	7 ≤ i ≤ 100		7 ≤ i ≤ 100	7 ≤ i ≤ 100
	14	⊖	7 ≤ i ≤ 60		7 ≤ i ≤ 60	7 ≤ i ≤ 60		7 ≤ i ≤ 60
	19	⊖	7 ≤ i ≤ 28	7 ≤ i ≤ 28		7 ≤ i ≤ 28	7 ≤ i ≤ 28	
W 63	19	⊖	⊖	⊖	⊖	7 ≤ i ≤ 100	⊖	
W 75	14	⊖	⊖	⊖	⊖	⊖		7 ≤ i ≤ 100
	19	⊖	⊖	⊖		7 ≤ i ≤ 100	7 ≤ i ≤ 100	
	24	⊖	⊖	⊖	7 ≤ i ≤ 100		7 ≤ i ≤ 100	
W 86	14	⊖	⊖	⊖	⊖	⊖		7 ≤ i ≤ 100
	19	⊖	⊖	⊖		7 ≤ i ≤ 100	7 ≤ i ≤ 100	
	24	⊖	⊖	⊖	7 ≤ i ≤ 100		7 ≤ i ≤ 100	
W 110	19	⊖	⊖	⊖		7 ≤ i ≤ 100	⊖	⊖
	24	⊖	⊖	⊖	7 ≤ i ≤ 100		⊖	⊖

Standard arrangement

Some hybrid shaft/flange combinations are also possible for VF reduction units with center distance greater than 130 mm. Please contact Bonfiglioli Technical Service.
The table above report possible configurations strictly based on geometric criteria.
To determine the compatibility of a motor-gear unit assembly in terms of mechanical factors, double-check the selected configuration against the rating charts for power/speed.
Be sure to avoid those combinations that yield a safety factor S < 0.9.

25 MOMENT OF INERTIA

The following charts indicate the mass moment of inertia J_r [Kgm²] referred to gear unit with high speed solid shaft. A key to the symbols used follows:

Values of the moment of inertia refer to compact gearmotors, less the motor inertia. To obtain the overall moment of inertia for the gearmotor just add the value of the inertia for the specific compact motor, given in the relevant rating chart.

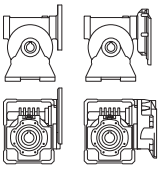

Values refer to gearmotors, IEC style, less the motor.

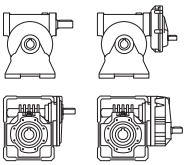

Values refer to speed reducers (solid input shaft).

VF 27

		i	J (•10-4) [kgm²]					
			P27					HS
VF 27	VF 27_7	7	0.02	—	—	—	—	0.02
	VF 27_10	10	0.01	—	—	—	—	0.01
	VF 27_15	15	0.01	—	—	—	—	0.01
	VF 27_20	20	0.01	—	—	—	—	0.01
	VF 27_30	30	0.01	—	—	—	—	0.01
	VF 27_40	40	0.01	—	—	—	—	0.01
	VF 27_60	60	0.01	—	—	—	—	0.01
	VF 27_70	70	0.01	—	—	—	—	0.01

VF 30

		i	J (•10-4) [kgm²]					
			P56	P63				HS
VF 30	VF 30_7	7	0.08	0.07	—	—	—	0.04
	VF 30_10	10	0.07	0.06	—	—	—	0.03
	VF 30_15	15	0.07	0.06	—	—	—	0.03
	VF 30_20	20	0.06	0.06	—	—	—	0.03
	VF 30_30	30	0.06	0.06	—	—	—	0.03
	VF 30_40	40	0.06	0.06	—	—	—	0.03
	VF 30_60	60	0.06	0.05	—	—	—	0.02
	VF 30_70	70	0.06	—	—	—	—	0.02

VF 44 - VFR 44

		i	J (•10-4) [kgm2]					
			S44	P63	P71			HS
VF 44	VF 44_7	7	—	0.29	0.27	—	—	0.18
	VF 44_10	10	—	0.24	0.22	—	—	0.14
	VF 44_14	14	—	0.23	0.21	—	—	0.12
	VF 44_20	20	—	0.19	0.18	—	—	0.09
	VF 44_28	28	—	0.21	0.19	—	—	0.11
	VF 44_35	35	—	0.19	0.18	—	—	0.09
	VF 44_46	46	—	0.18	—	—	—	0.08
	VF 44_60	60	—	0.17	—	—	—	0.07
	VF 44_70	70	—	0.17	—	—	—	0.07
	VF 44_100	100	—	0.17	—	—	—	0.07
VFR 44	VFR 44_70	70	0.21	—	—	—	—	—
	VFR 44_100	100	0.20	—	—	—	—	—
	VFR 44_140	140	0.20	—	—	—	—	—
	VFR 44_175	175	0.20	—	—	—	—	—
	VFR 44_230	230	0.20	—	—	—	—	—
	VFR 44_300	300	0.20	—	—	—	—	—
	VFR 44_350	350	0.20	—	—	—	—	—
	VFR 44_500	500	0.20	—	—	—	—	—

VF 49 - VFR 49

		i	J (•10-4) [kgm2]					
			P63	P71	P80			HS
VF 49	VF 49_7	7	0.69	0.67	0.61	—	—	0.42
	VF 49_10	10	0.61	0.60	0.53	—	—	0.34
	VF 49_14	14	0.58	0.57	0.5	—	—	0.31
	VF 49_18	18	0.54	0.53	0.46	—	—	0.27
	VF 49_24	24	0.52	0.5	0.44	—	—	0.24
	VF 49_28	28	0.56	0.54	0.48	—	—	0.28
	VF 49_36	36	0.53	0.51	—	—	—	0.25
	VF 49_45	45	0.51	0.49	—	—	—	0.24
	VF 49_60	60	0.50	0.48	—	—	—	0.23
	VF 49_70	70	0.50	—	—	—	—	0.22
	VF 49_80	80	0.49	—	—	—	—	0.22
	VF 49_100	100	0.49	—	—	—	—	0.22
VFR 49	VFR 49_30	30	0.74	—	—	—	—	0.94
	VFR 49_42	42	0.73	—	—	—	—	0.93
	VFR 49_54	54	0.73	—	—	—	—	0.93
	VFR 49_72	72	0.73	—	—	—	—	0.93
	VFR 49_84	84	0.73	—	—	—	—	0.93
	VFR 49_108	108	0.73	—	—	—	—	0.93
	VFR 49_135	135	0.73	—	—	—	—	0.93
	VFR 49_180	180	0.73	—	—	—	—	0.93
	VFR 49_210	210	0.72	—	—	—	—	0.92
	VFR 49_240	240	0.72	—	—	—	—	0.92
	VFR 49_300	300	0.72	—	—	—	—	0.92

W 63 - WR 63

		i	J (•10-4) [kgm2]									
			S1	S2	S3	P63	P71	P80	P90			HS
W 63	W 63_7	7	3.4	3.6	—	—	3.5	3.5	3.5	—	—	3.6
	W 63_10	10	3.1	3.3	—	—	3.2	3.3	3.2	—	—	3.3
	W 63_12	12	3.1	3.3	—	—	3.1	3.2	3.1	—	—	3.3
	W 63_15	15	3.0	3.2	—	—	3.0	3.1	3.0	—	—	3.2
	W 63_19	19	2.9	3.1	—	—	2.9	3.0	2.9	—	—	3.1
	W 63_24	24	2.8	3.1	—	—	2.9	3.0	2.9	—	—	3.0
	W 63_30	30	2.9	3.1	—	—	2.9	3.0	2.9	—	—	3.1
	W 63_38	38	2.8	3.1	—	—	2.9	3.0	2.9	—	—	3.0
	W 63_45	45	2.8	3.0	—	—	2.9	2.9	2.9	—	—	3.0
	W 63_64	64	2.8	3.0	—	—	2.8	2.9	2.8	—	—	3.0
	W 63_80	80	2.8	3.0	—	—	2.8	2.9	2.8	—	—	3.0
	W 63_100	100	2.8	3.0	—	—	2.8	2.9	2.8	—	—	2.9
WR 63	WR 63_21	21	—	—	—	0.84	0.83	—	—	—	—	0.81
	WR 63_30	30	—	—	—	0.81	0.80	—	—	—	—	0.78
	WR 63_36	36	—	—	—	0.81	0.80	—	—	—	—	0.77
	WR 63_45	45	—	—	—	0.80	0.79	—	—	—	—	0.76
	WR 63_57	57	—	—	—	0.79	0.78	—	—	—	—	0.75
	WR 63_72	72	—	—	—	0.78	0.77	—	—	—	—	0.74
	WR 63_90	90	—	—	—	0.79	0.78	—	—	—	—	0.75
	WR 63_114	114	—	—	—	0.78	0.77	—	—	—	—	0.74
	WR 63_135	135	—	—	—	0.78	0.77	—	—	—	—	0.74
	WR 63_192	192	—	—	—	0.77	0.76	—	—	—	—	0.74
	WR 63_240	240	—	—	—	0.77	0.76	—	—	—	—	0.74
	WR 63_300	300	—	—	—	0.77	0.76	—	—	—	—	0.73

W 75 - WR 75

		i	J (•10-4) [kgm2]									
			S1	S2	S3	P63	P71	P80	P90	P100	P112	HS
W 75	W 75_7	7	6.9	6.6	6.6	—	6.9	7.0	6.9	6.9	6.9	7.3
	W 75_10	10	6.4	6.1	6.1	—	6.4	6.4	6.3	5.7	5.7	6.8
	W 75_15	15	6.1	5.8	5.8	—	6.1	6.1	6.0	5.3	5.3	6.5
	W 75_20	20	5.9	5.6	5.6	—	5.9	5.9	5.9	5.2	5.2	6.3
	W 75_25	25	5.9	5.6	5.6	—	6.0	6.0	5.9	5.2	5.2	6.3
	W 75_30	30	5.9	5.6	5.6	—	5.9	5.9	5.9	5.2	5.2	6.3
	W 75_40	40	5.9	5.6	5.6	—	5.9	5.9	5.8	5.2	5.2	6.3
	W 75_50	50	5.9	5.6	5.6	—	5.9	5.9	5.8	5.1	5.1	6.2
	W 75_60	60	5.8	5.5	5.5	—	5.8	5.9	5.8	5.1	5.1	6.2
	W 75_80	80	5.8	5.5	5.5	—	5.8	5.8	5.8	5.1	5.1	6.2
	W 75_100	100	5.8	5.5	5.5	—	5.8	5.8	5.7	5.0	5.0	6.2
WR 75	WR 75_21	21	—	—	—	1.2	1.2	2.1	—	—	—	1.9
	WR 75_30	30	—	—	—	1.1	1.1	2.1	—	—	—	1.1
	WR 75_45	45	—	—	—	1.1	1.1	2.0	—	—	—	1.1
	WR 75_60	60	—	—	—	1.1	1.1	2.0	—	—	—	1.0
	WR 75_75	75	—	—	—	1.1	1.1	2.0	—	—	—	1.0
	WR 75_90	90	—	—	—	1.1	1.1	2.0	—	—	—	1.0
	WR 75_120	120	—	—	—	1.1	1.1	2.0	—	—	—	1.0
	WR 75_150	150	—	—	—	1.1	1.1	2.0	—	—	—	1.0
	WR 75_180	180	—	—	—	1.1	1.1	2.0	—	—	—	1.0
	WR 75_240	240	—	—	—	1.1	1.1	2.0	—	—	—	1.0
	WR 75_300	300	—	—	—	1.1	1.1	2.0	—	—	—	1.0

		i	J (•10-4) [kgm2]
			P90
WR 75_P90 B5	WR 75_15	15	6.0
	WR 75_22.5	22.5	5.9
	WR 75_30	30	5.8
	WR 75_37.5	37.5	5.8
	WR 75_45	45	5.8
	WR 75_60	60	5.8
	WR 75_75	75	5.8
	WR 75_90	90	5.7
	WR 75_120	120	5.7
	WR 75_150	150	5.7

W 86 - WR 86

		i	J (•10-4) [kgm2]									
			S1	S2	S3	P63	P71	P80	P90	P100		HS
W 86	W 86_7	7	9.7	9.4	9.4	—	9.7	9.7	9.6	9.6	—	10.1
	W 86_10	10	8.4	8.1	8.1	—	8.4	8.4	8.3	7.7	—	8.9
	W 86_15	15	7.7	7.4	7.4	—	7.7	7.7	7.7	7.0	—	8.2
	W 86_20	20	6.9	6.6	6.6	—	6.9	7.0	6.9	6.2	—	7.4
	W 86_23	23	6.8	6.5	6.5	—	6.8	6.9	6.8	6.1	—	7.3
	W 86_30	30	7.3	7.0	7.0	—	7.3	7.3	7.3	6.6	—	7.8
	W 86_40	40	6.7	6.4	6.4	—	6.7	6.7	6.6	6.0	—	7.2
	W 86_46	46	6.7	6.4	6.4	—	6.7	6.7	6.6	5.9	—	7.1
	W 86_56	56	6.6	6.3	6.3	—	6.6	6.7	6.6	5.9	—	7.1
	W 86_64	64	6.6	6.3	6.3	—	6.6	6.6	6.5	5.9	—	7.1
	W 86_80	80	6.6	6.3	6.3	—	6.6	6.6	6.5	5.9	—	7.1
	W 86_100	100	6.4	6.1	6.1	—	6.4	6.5	6.4	5.7	—	6.9
WR 86	WR 86_21	21	—	—	—	1.5	1.5	2.4	—	—	—	2.2
	WR 86_30	30	—	—	—	1.4	1.3	2.3	—	—	—	1.3
	WR 86_45	45	—	—	—	1.3	1.3	2.2	—	—	—	1.2
	WR 86_60	60	—	—	—	1.2	1.2	2.1	—	—	—	1.2
	WR 86_69	69	—	—	—	1.2	1.2	2.1	—	—	—	1.1
	WR 86_90	90	—	—	—	1.2	1.2	2.2	—	—	—	1.2
	WR 86_120	120	—	—	—	1.2	1.2	2.1	—	—	—	1.1
	WR 86_138	138	—	—	—	1.2	1.2	2.1	—	—	—	1.1
	WR 86_168	168	—	—	—	1.2	1.2	2.1	—	—	—	1.1
	WR 86_192	192	—	—	—	1.2	1.1	2.1	—	—	—	1.1
	WR 86_240	240	—	—	—	1.2	1.1	2.1	—	—	—	1.1
	WR 86_300	300	—	—	—	1.1	1.1	2.1	—	—	—	1.1

		i	J (•10-4) [kgm2]
			P90
WR 86_P90 B5	WR 86_15	15	6.9
	WR 86_22.5	22.5	6.6
	WR 86_30	30	6.3
	WR 86_34.5	34.5	6.2
	WR 86_45	45	6.4
	WR 86_60	60	6.2
	WR 86_69	69	6.1
	WR 86_84	84	6.1
	WR 86_96	96	6.0
	WR 86_120	120	6.0
	WR 86_150	150	5.9

W 110 - WR 110

		i	J (•10-4) [kgm2]									
			S1	S2	S3	P63	P71	P80	P90	P100	P132	HS
W 110	W 110_7	7	—	22	22	—	—	23	23	23	28	23
	W 110_10	10	—	19	19	—	—	19	19	24	24	20
	W 110_15	15	—	17	17	—	—	17	17	22	22	17
	W 110_20	20	—	14	14	—	—	14	14	19	19	15
	W 110_23	23	—	14	14	—	—	14	14	19	19	15
	W 110_30	30	—	15	15	—	—	16	16	20	20	16
	W 110_40	40	—	13	13	—	—	14	14	19	19	14
	W 110_46	46	—	13	13	—	—	13	13	18	18	14
	W 110_56	56	—	13	13	—	—	13	13	18	18	14
	W 110_64	64	—	13	13	—	—	13	13	18	18	14
	W 110_80	80	—	13	13	—	—	13	13	18	18	14
	W 110_100	100	—	13	13	—	—	13	13	18	18	14
WR 110	WR 110_21	21	—	—	—	—	3.0	9.0	8.8	8.9	—	9.2
	WR 110_30	30	—	—	—	—	2.5	8.6	8.4	8.4	—	8.8
	WR 110_45	45	—	—	—	—	2.3	8.3	8.2	8.2	—	8.5
	WR 110_60	60	—	—	—	—	2.0	8.1	7.9	7.9	—	8.3
	WR 110_69	69	—	—	—	—	2.0	8.0	7.9	7.9	—	8.2
	WR 110_90	90	—	—	—	—	2.2	8.2	8.1	8.1	—	8.4
	WR 110_120	120	—	—	—	—	1.9	8.0	7.8	7.9	—	8.2
	WR 110_138	138	—	—	—	—	1.9	8.0	7.8	7.8	—	8.2
	WR 110_168	168	—	—	—	—	1.9	8.0	7.8	7.8	—	8.1
	WR 110_192	192	—	—	—	—	1.9	7.9	7.8	7.8	—	8.1
	WR 110_240	240	—	—	—	—	1.9	7.9	7.8	7.8	—	8.1
	WR 110_300	300	—	—	—	—	1.9	7.9	7.8	7.8	—	8.1

VF 130 - VFR 130

		i	J (•10-4) [kgm2]					
			P80	P90	P100	P112	P132	HS
VF 130	VF 130_7	7	—	—	36	36	35	31
	VF 130_10	10	—	—	27	27	25	22
	VF 130_15	15	—	—	20	20	18	15
	VF 130_20	20	—	—	17	17	15	11
	VF 130_23	23	—	—	16	16	14	11
	VF 130_30	30	—	—	17	17	15	12
	VF 130_40	40	—	—	15	15	14	9.9
	VF 130_46	46	—	14	14	14	—	8.2
	VF 130_56	56	—	13	13	13	—	7.8
	VF 130_64	64	—	13	13	13	—	7.4
	VF 130_80	80	—	13	12	12	—	7.0
	VF 130_100	100	—	13	—	—	—	8.9
VFR 130	VFR 130_30	30	5.3	5.3	5.2	5.2	—	5.7
	VFR 130_45	45	4.5	4.5	4.4	4.4	—	4.9
	VFR 130_60	60	4.2	4.1	4.1	4.1	—	4.6
	VFR 130_69	69	4.1	4.0	4.0	4.0	—	4.5
	VFR 130_90	90	4.2	4.1	4.1	4.1	—	4.6
	VFR 130_120	120	4.0	3.9	4.0	4.0	—	4.4
	VFR 130_138	138	3.8	3.8	3.7	3.7	—	4.2
	VFR 130_168	168	3.8	3.7	3.7	3.7	—	4.1
	VFR 130_192	192	3.7	3.7	3.6	3.6	—	4.1
	VFR 130_240	240	3.7	3.6	3.6	3.6	—	4.1
	VFR 130_300	300	3.9	3.8	3.8	3.8	—	4.3

VF 150 - VFR 150

		i	J (•10-4) [kgm2]				
			P90	P100	P112	P132	HS
VF 150	VF 150_7	7	—	—	—	58	50
	VF 150_10	10	—	—	—	44	35
	VF 150_15	15	—	—	—	29	21
	VF 150_20	20	—	—	—	27	19
	VF 150_23	23	—	28	28	26	17
	VF 150_30	30	—	31	31	29	21
	VF 150_40	40	—	26	26	24	16
	VF 150_46	46	—	24	24	22	13
	VF 150_56	56	25	24	24	—	13
	VF 150_64	64	24	23	23	—	12
	VF 150_80	80	23	22	22	—	11
	VF 150_100	100	23	22	22	—	11
VFR 150	VFR 150_25	25	—	—	—	15	—
	VFR 150_30	30	10	10	10	—	11
	VFR 150_37.5	37.5	—	—	—	13	—
	VFR 150_45	45	8.8	8.8	8.8	—	9.7
	VFR 150_50	50	—	—	—	12	—
	VFR 150_60	60	8.3	8.3	8.3	—	9.2
	VFR 150_69	69	8.4	8.4	8.4	—	9.3
	VFR 150_90	90	8.7	8.7	8.7	—	9.7
	VFR 150_120	120	8.2	8.2	8.2	—	9.2
	VFR 150_138	138	7.9	7.9	7.9	—	8.9
	VFR 150_168	168	7.9	7.9	7.9	—	8.9
	VFR 150_192	192	7.8	7.8	7.8	—	8.8
	VFR 150_240	240	7.7	7.7	7.7	—	8.6
	VFR 150_300	300	7.7	7.7	7.7	—	8.6

VF 185 - VFR 185

		i	J (•10-4) [kgm2]						
			P90	P100	P112	P132	P160	P180	HS
VF 185	VF 185_7	7	—	—	—	—	—	146	128
	VF 185_10	10	—	—	—	—	—	108	91
	VF 185_15	15	—	—	—	—	70	88	50
	VF 185_20	20	—	—	—	—	69	66	48
	VF 185_30	30	—	—	—	58	54	—	34
	VF 185_40	40	—	—	—	63	61	—	41
	VF 185_50	50	—	59	59	58	—	—	35
	VF 185_60	60	—	55	55	53	—	—	31
	VF 185_80	80	—	52	52	51	—	—	28
	VF 185_100	100	—	51	51	—	—	—	27
VFR 185	VFR 185_25	25	—	—	—	24	—	—	—
	VFR 185_30	30	17	17	17	—	—	—	18
	VFR 185_37.5	37.5	—	—	—	17	—	—	—
	VFR 185_45	45	12	12	12	—	—	—	13
	VFR 185_50	50	—	—	—	17	—	—	—
	VFR 185_60	60	12	12	12	—	—	—	13
	VFR 185_75	75	—	—	—	15	—	—	—
	VFR 185_90	90	10	10	10	—	—	—	11
	VFR 185_100	100	—	—	—	16	—	—	—
	VFR 185_120	120	11	11	11	—	—	—	12
	VFR 185_150	150	10	10	10	—	—	—	11
	VFR 185_180	180	9.9	9.9	9.9	—	—	—	11
	VFR 185_240	240	9.6	9.6	9.6	—	—	—	11
	VFR 185_300	300	9.5	9.4	9.4	—	—	—	10

Bonfiglioli Riduttori

VF 210 - VFR 210

		i	J (•10-4) [kgm2]							
			P100	P112	P132	P160	P180	P200	P225	HS
VF 210	VF 210_7	7	—	—	286	286	286	286	286	286
	VF 210_10	10	—	—	177	177	177	177	177	177
	VF 210_15	15	—	—	120	120	120	120	120	120
	VF 210_20	20	—	—	116	116	116	116	116	116
	VF 210_30	30	—	—	81	81	81	81	81	81
	VF 210_40	40	—	—	98	98	98	98	98	98
	VF 210_50	50	—	—	84	84	84	84	84	84
	VF 210_60	60	—	—	75	75	75	75	75	75
	VF 210_80	80	—	—	68	68	68	68	68	68
	VF 210_100	100	—	—	63	63	63	63	63	63
VFR 210	VFR 210_30	30	48	48	47	47	—	—	—	51
	VFR 210_45	45	41	41	41	41	—	—	—	45
	VFR 210_60	60	41	41	41	40	—	—	—	45
	VFR 210_90	90	37	37	37	36	—	—	—	41
	VFR 210_120	120	39	39	39	38	—	—	—	43
	VFR 210_150	150	37	37	37	37	—	—	—	41
	VFR 210_180	180	36	36	36	36	—	—	—	40
	VFR 210_240	240	36	36	36	35	—	—	—	39
	VFR 210_300	300	35	35	35	34	—	—	—	39

VF 250 - VFR 250

		i	J (•10-4) [kgm2]							
			P100	P112	P132	P160	P180	P200	P225	HS
VF 250	VF 250_7	7	—	—	620	620	620	620	620	620
	VF 250_10	10	—	—	387	387	387	387	387	387
	VF 250_15	15	—	—	266	266	266	266	266	266
	VF 250_20	20	—	—	242	242	242	242	242	242
	VF 250_30	30	—	—	184	184	184	184	184	184
	VF 250_40	40	—	—	241	241	241	241	241	241
	VF 250_50	50	—	—	240	240	240	240	240	240
	VF 250_60	60	—	—	158	158	158	158	158	158
	VF 250_80	80	—	—	160	160	160	160	160	160
	VF 250_100	100	—	—	149	149	149	149	149	149
VFR 250	VFR 250_30	30	71	71	71	70	—	—	—	75
	VFR 250_45	45	58	58	57	57	—	—	—	61
	VFR 250_60	60	55	55	55	54	—	—	—	58
	VFR 250_90	90	48	48	48	48	—	—	—	52
	VFR 250_120	120	55	55	54	54	—	—	—	58
	VFR 250_150	150	55	55	54	54	—	—	—	58
	VFR 250_180	180	46	46	45	45	—	—	—	49
	VFR 250_240	240	46	46	45	45	—	—	—	49
	VFR 250_300	300	45	45	44	44	—	—	—	48

VF 27...BN27

A

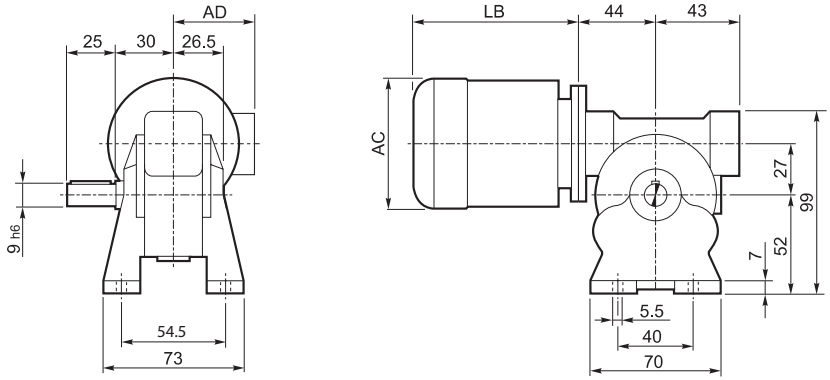

N

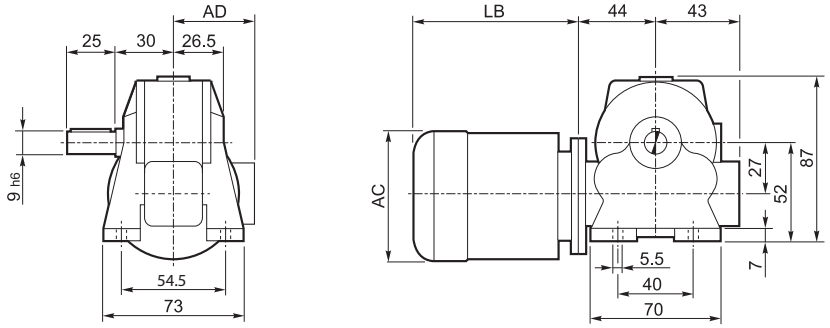

V

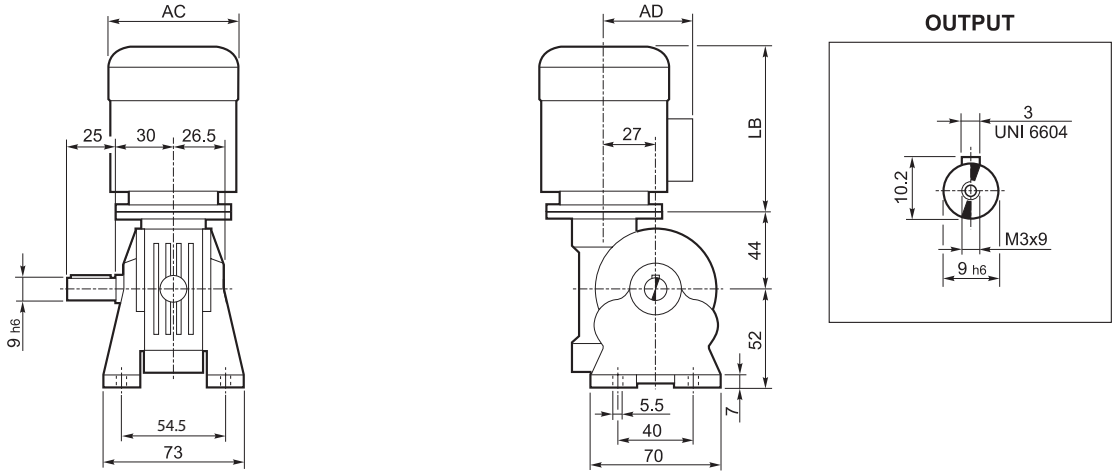

F_

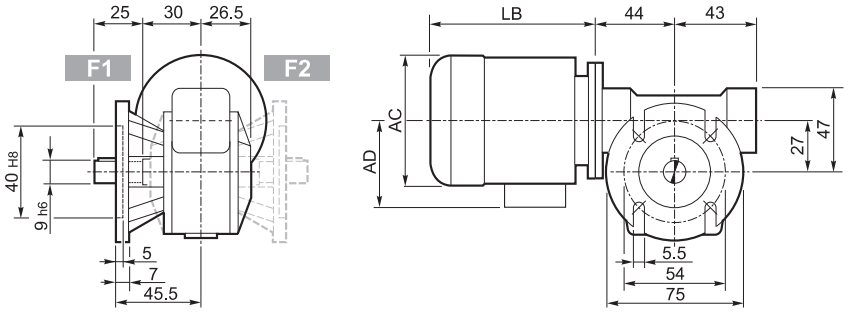

	P_n kW	n min^{-1}	M_n Nm	η %	COSφ	In A (400V)	Is/In	Ms/Mn	Ma/Mn	Jm ($\cdot 10^{-4}$) kgm^2	Kg	LB	AC	AD
BN 27A4	0.04	1350	0.28	36	0.57	0.28	2.3	2.0	1.8	0.56	2.8	152	103	76
BN 27B4	0.06	1360	0.42	39	0.57	0.39	2.5	2.2	1.9	0.76	3.1	152	103	76
BN 27C4	0.09	1380	0.63	46	0.65	0.43	2.8	2.3	1.9	1.49	3.3	175	112	94

VF 30...P (IEC)

A

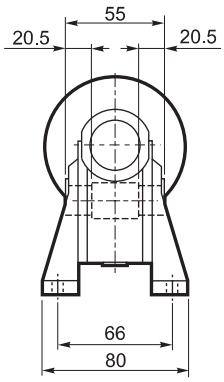

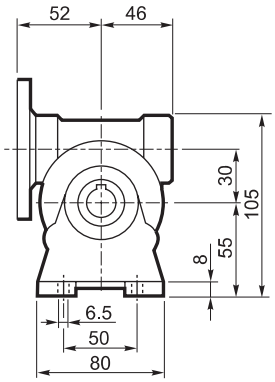

INPUT

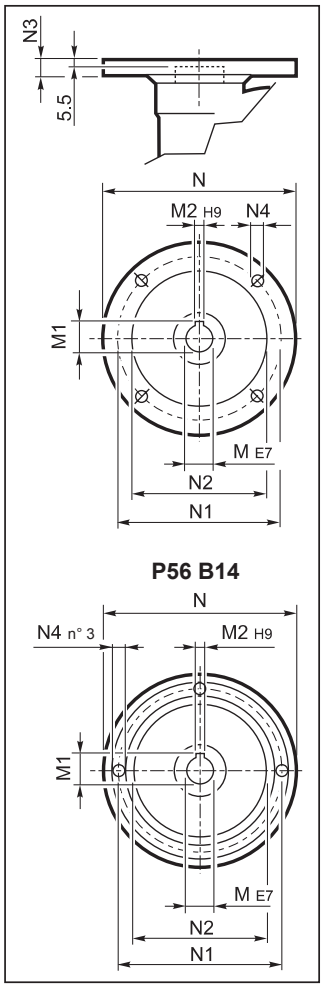

N

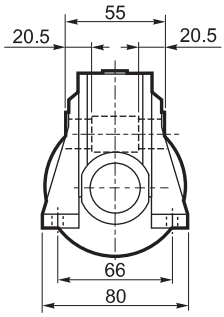

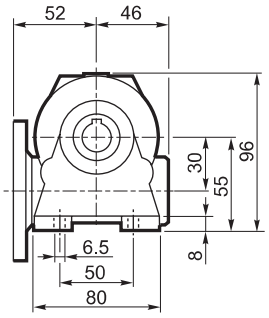

V

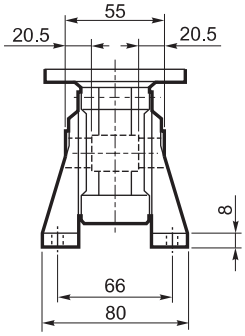

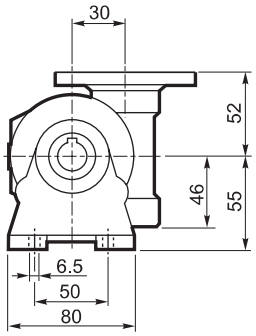

OUTPUT

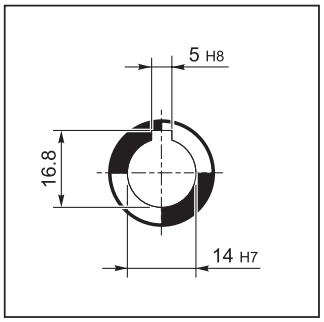

P

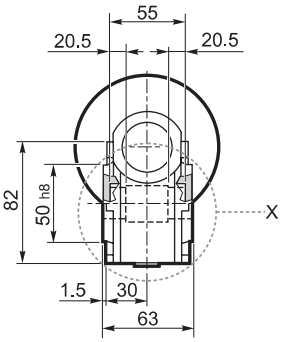

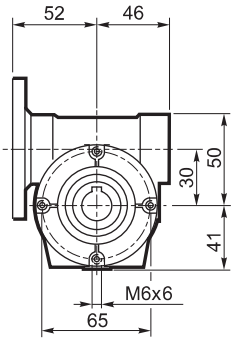

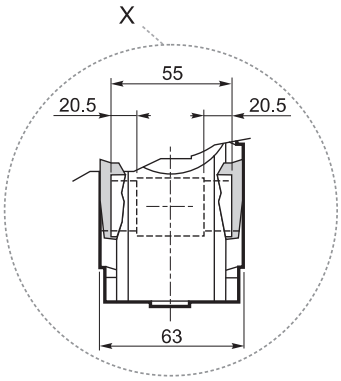

VF 30...P (IEC)

F_

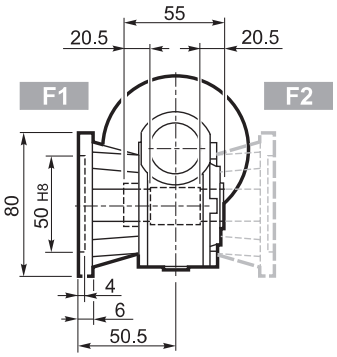

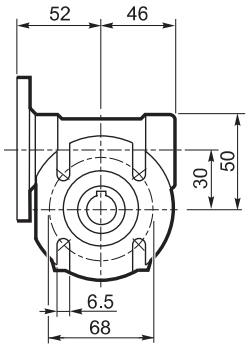

U

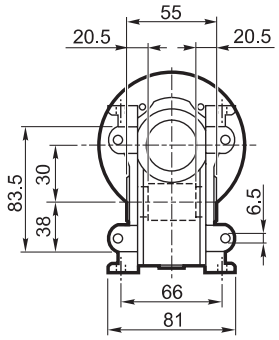

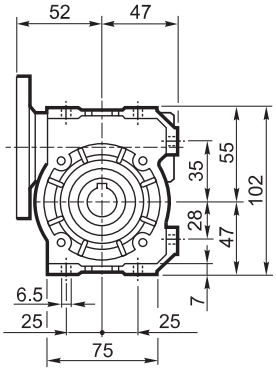

INPUT

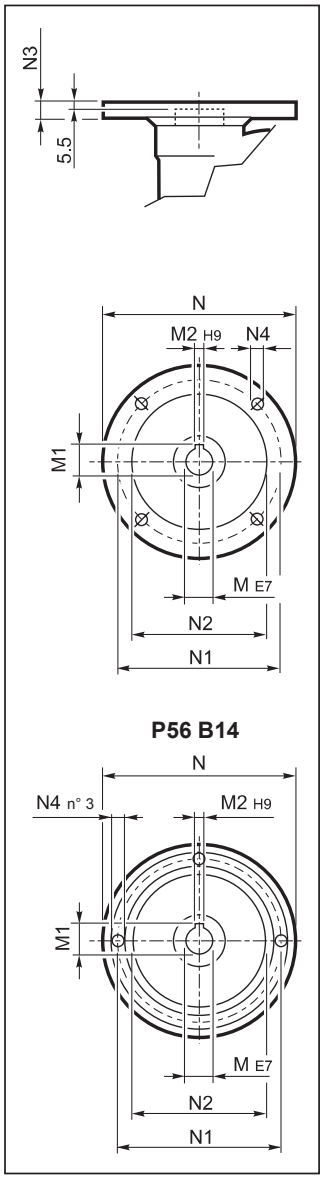

OUTPUT

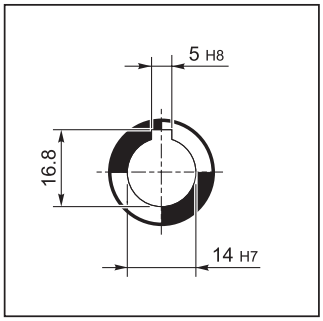

		M	M1	M2	N	N1	N2	N3	N4	Kg
VF 30	**P56 B5**	9	10.4	3	120	100	80	7	7	1.1
VF 30	**P56 B14**	9	10.4	3	80	65	50	7	5.5	
VF 30	**P63 B5**	11	12.8	4	140	115	95	8	9.5	
VF 30	**P63 B14**	11	12.8	4	90	75	60	6	5.5	

VF 44...P (IEC)

A

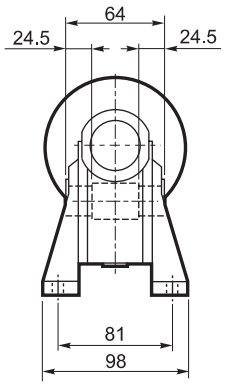

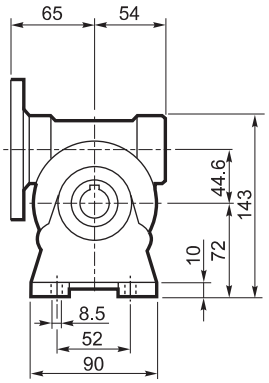

INPUT

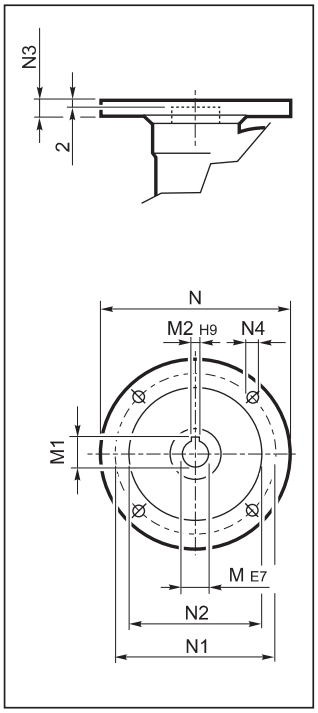

N

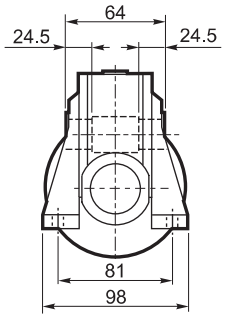

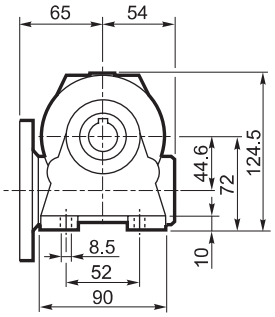

OUTPUT

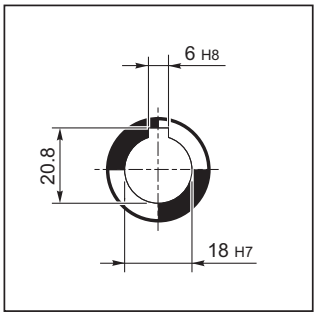

V

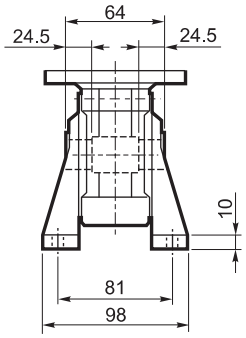

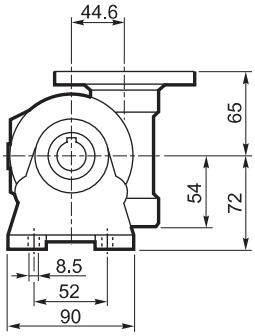

P

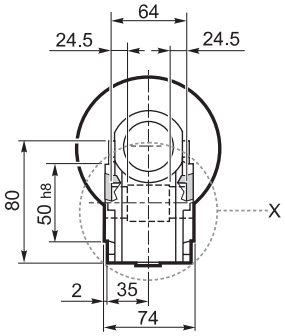

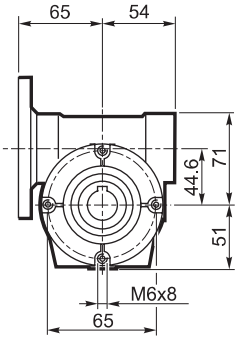

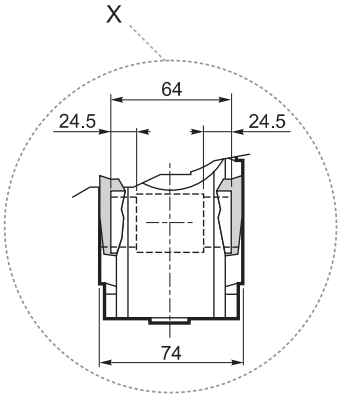

VF 44...P (IEC)

F_

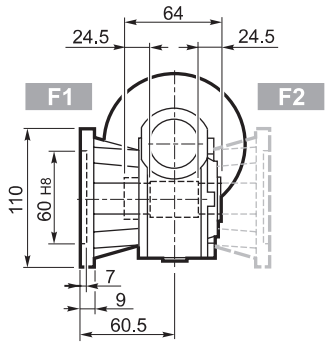

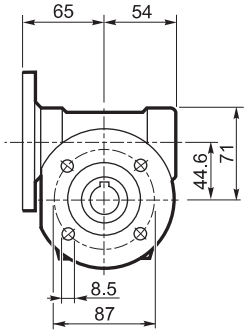

INPUT

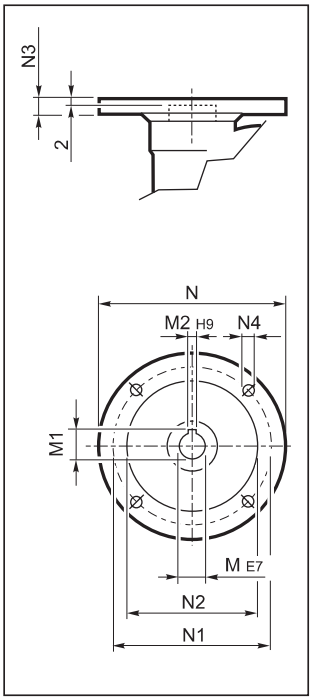

FA_

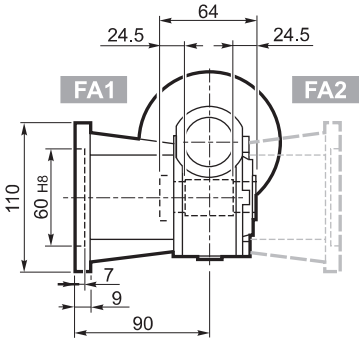

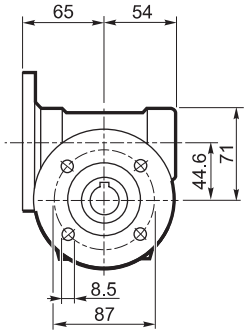

U

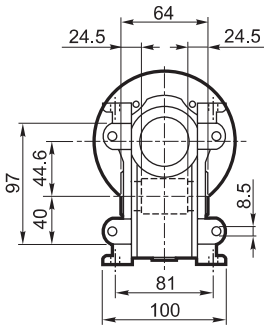

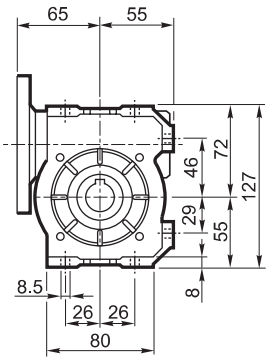

OUTPUT

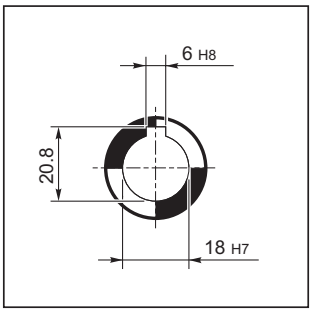

		M	M1	M2	N	N1	N2	N3	N4	Kg
VF 44	**P63 B5**	11	12.8	4	140	115	95	10	9.5	2.0
VF 44	**P71 B5**	14	16.3	5	160	130	110	10	9.5	
VF 44	**P63 B14**	11	12.8	4	90	75	60	8	5.5	
VF 44	**P71 B14**	14	16.3	5	105	85	70	10	7	

VFR 44...BN 44

A

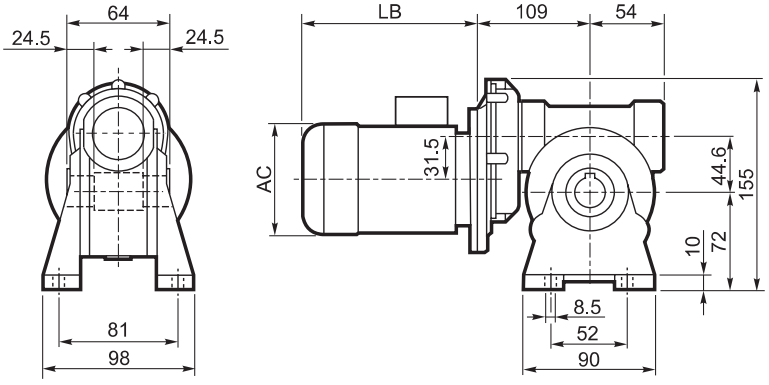

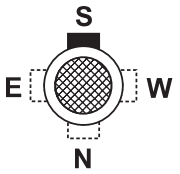

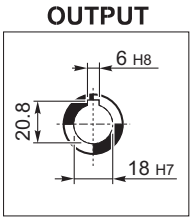

N

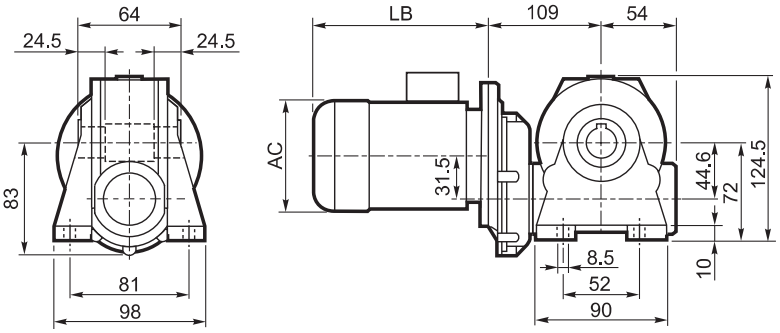

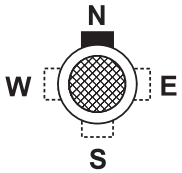

V

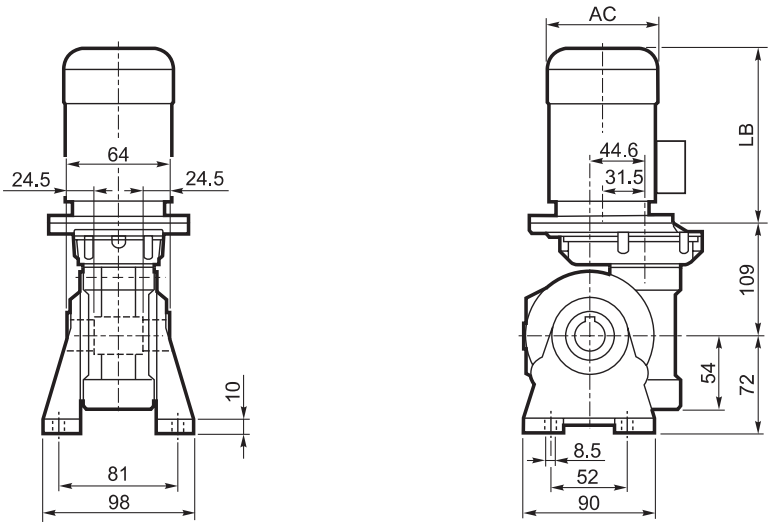

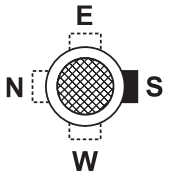

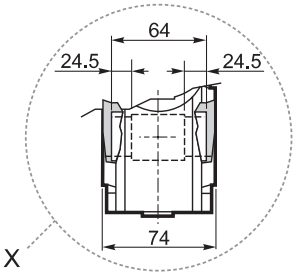

P

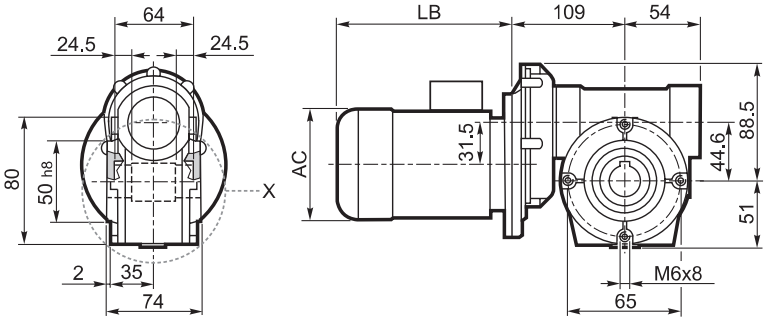

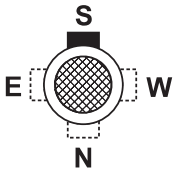

VFR 44...BN 44

F_

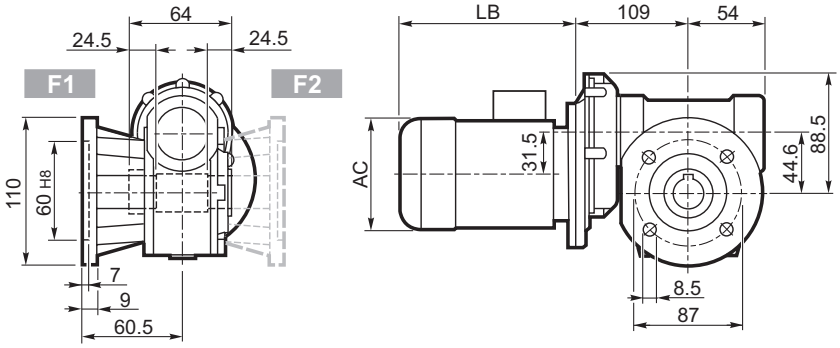

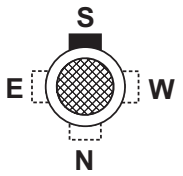

OUTPUT

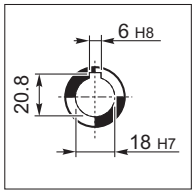

FA_

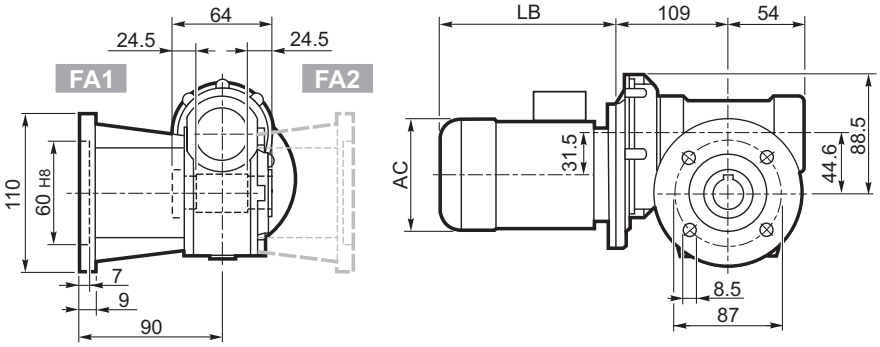

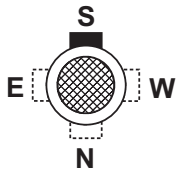

U

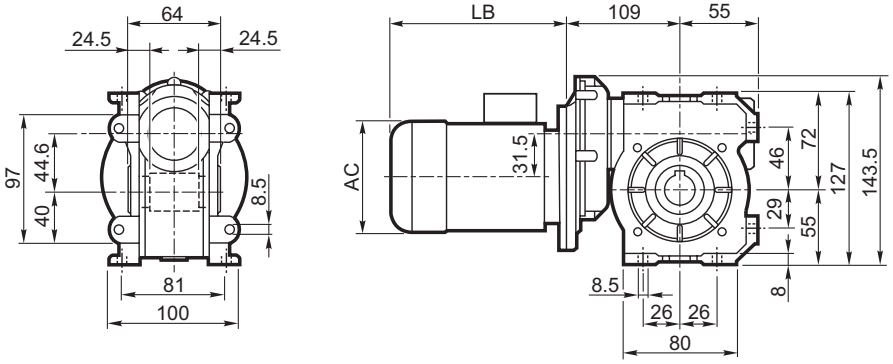

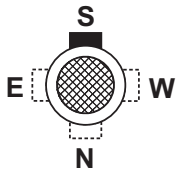

	P_n kW	n min^{-1}	M_n Nm	η %	COSφ	In A (400V)	Is/In	Ms/Mn	Ma/Mn	Jm (·10^{-4}) kgm^2	Kg	LB	AC	AD
BN 44B4	0.06	1380	0.42	40	0.58	0.38	2.4	2.3	1.9	1.22	4.7	168	112	94
BN 44C4	0.09	1380	0.63	46	0.65	0.43	2.8	2.3	2	1.49	4.6	168	112	94

VF/VF 30/44...P (IEC)

A

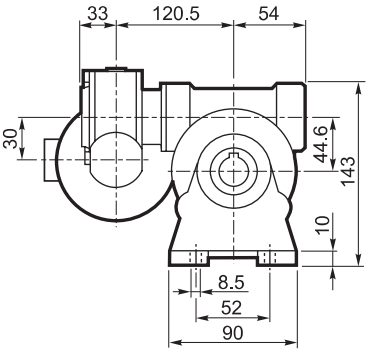

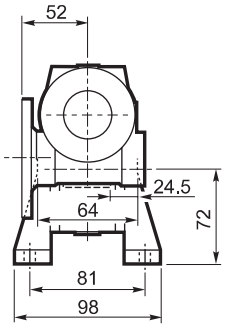

INPUT

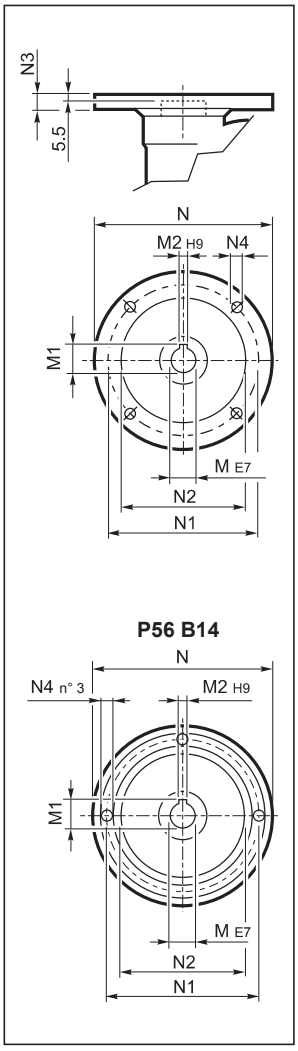

F_

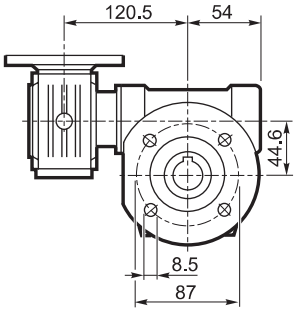

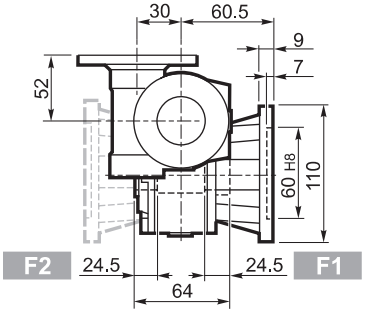

FA_

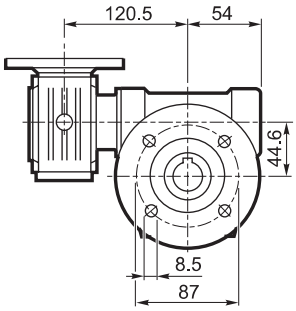

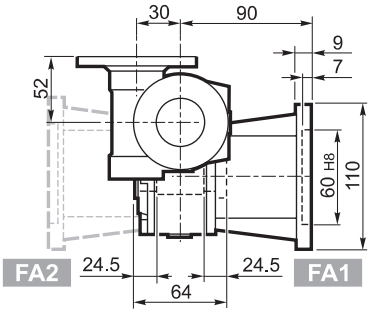

OUTPUT

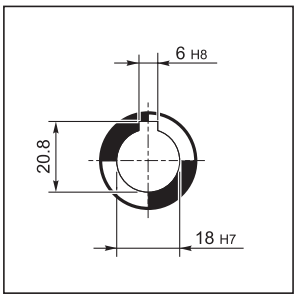

VF/VF 30/44...P (IEC)

P

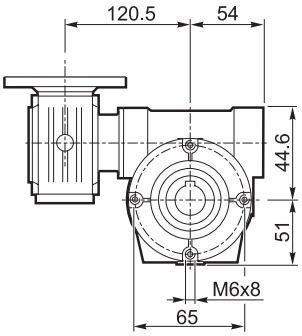

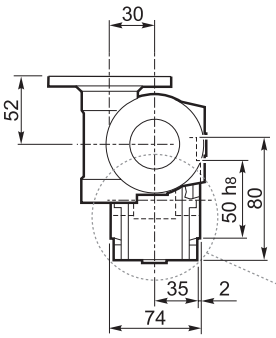

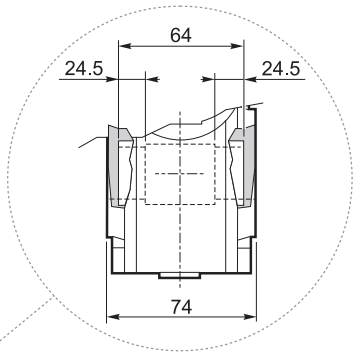

U

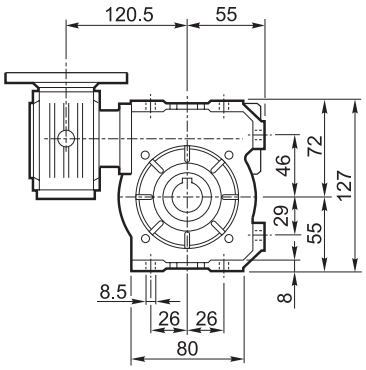

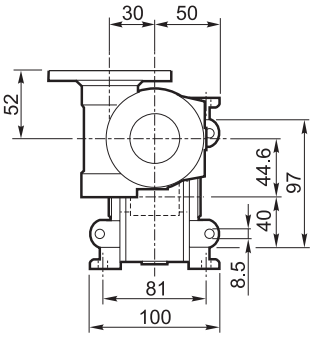

INPUT

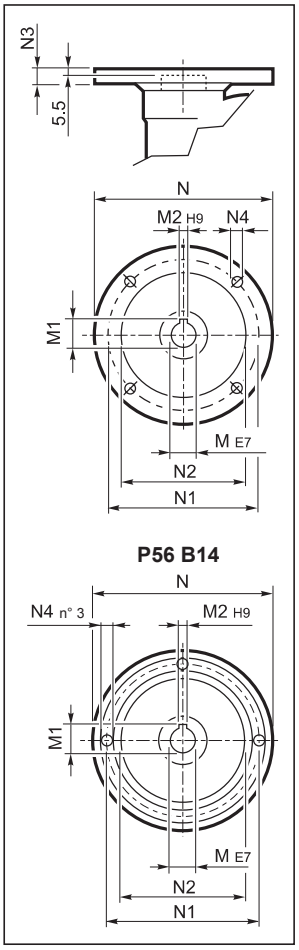

OUTPUT

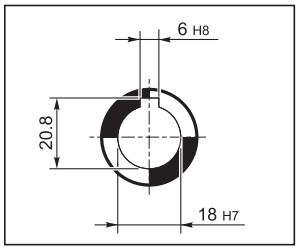

		M	M1	M2	N	N1	N2	N3	N4	Kg
VF/VF 30/44	**P56 B14**	9	10.4	3	80	65	50	7	5.5	3.5
VF/VF 30/44	**P63 B14**	11	12.8	4	90	75	60	6	5.5	

VF 49...P (IEC)

A

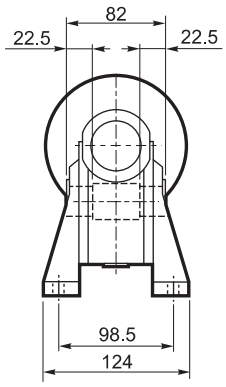

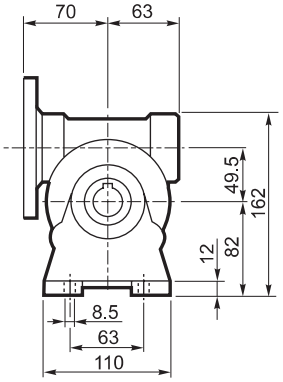

INPUT

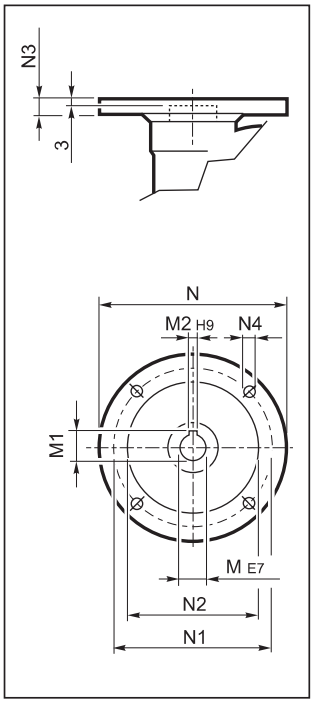

N

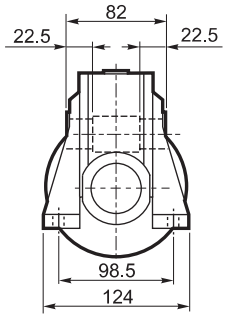

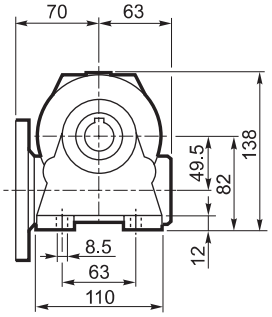

OUTPUT

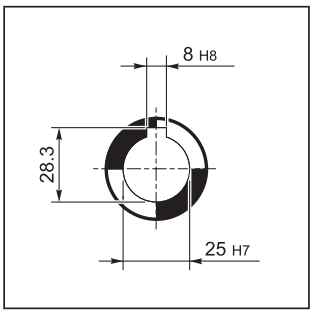

V

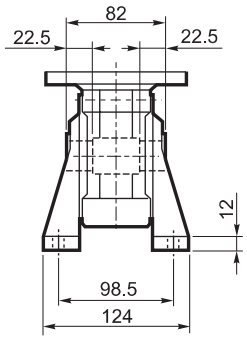

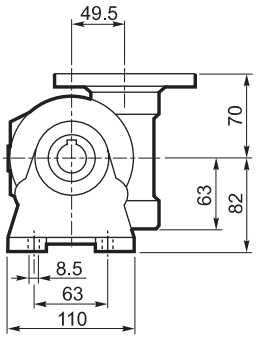

P

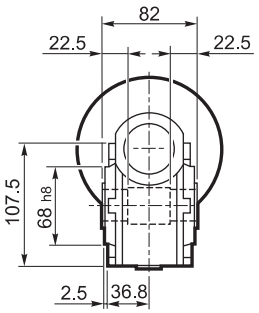

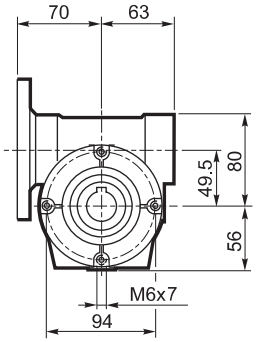

VF 49...P (IEC)

F_

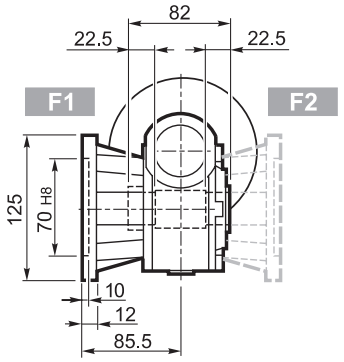

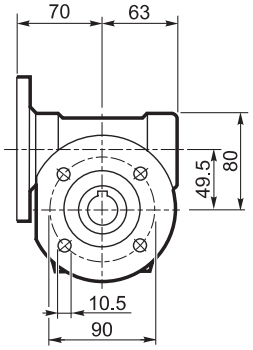

INPUT

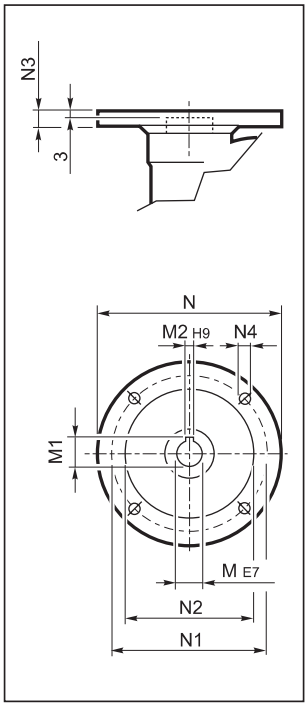

FA_

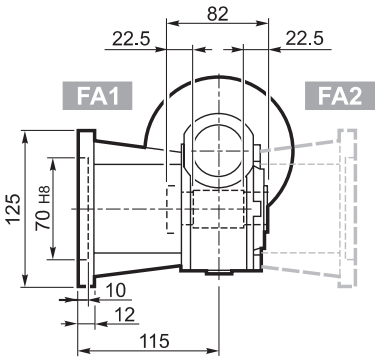

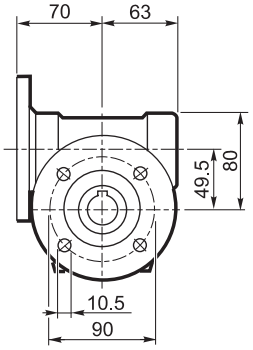

OUTPUT

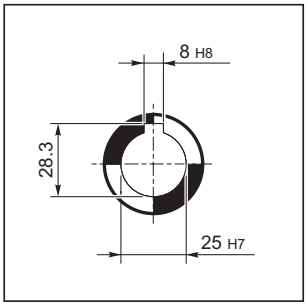

U

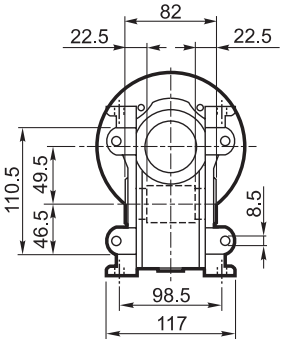

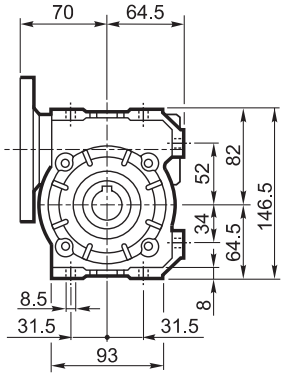

		M	M1	M2	N	N1	N2	N3	N4	Kg
VF 49	**P63 B5**	11	12.8	4	140	115	95	10.5	9.5	3.0
VF 49	**P71 B5**	14	16.3	5	160	130	110	10.5	9.5	
VF 49	**P80 B5**	19	21.8	6	200	165	130	10	11.5	
VF 49	**P63 B14**	11	12.8	4	90	75	60	7	6	
VF 49	**P71 B14**	14	16.3	5	105	85	70	10.5	6.5	
VF 49	**P80 B14**	19	21.8	6	120	100	80	10	7	

VFR 49...P (IEC)

A

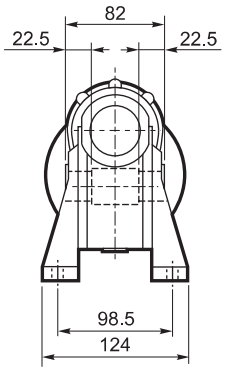

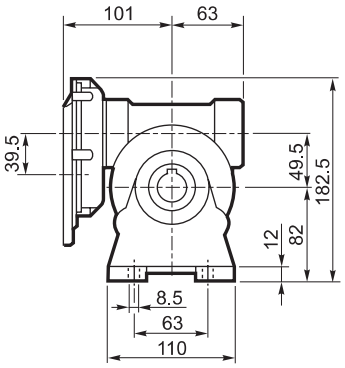

INPUT

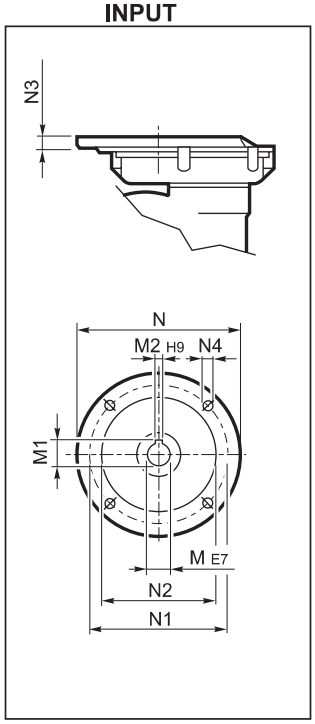

N

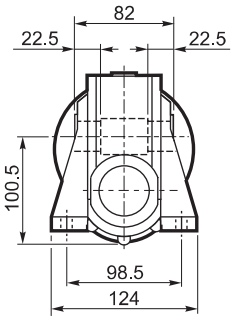

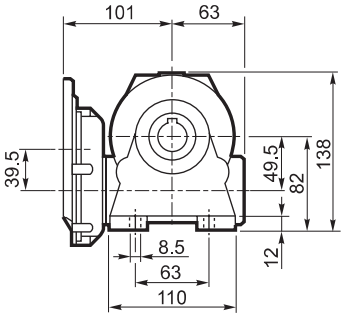

OUTPUT

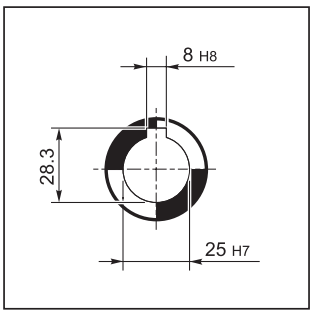

V

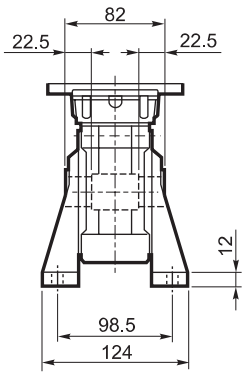

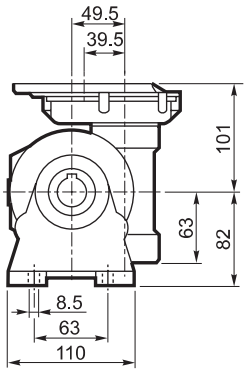

P

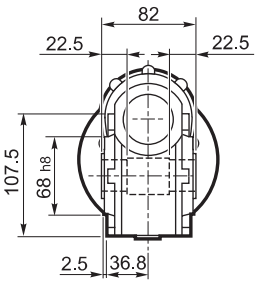

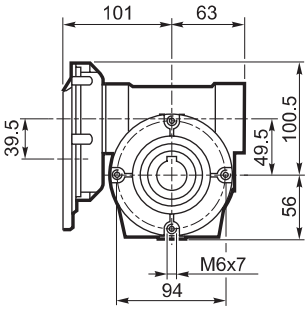

VFR 49...P (IEC)

F_

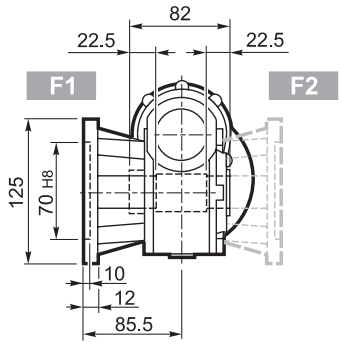

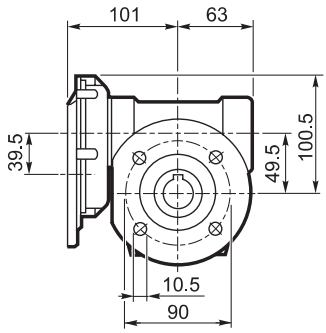

INPUT

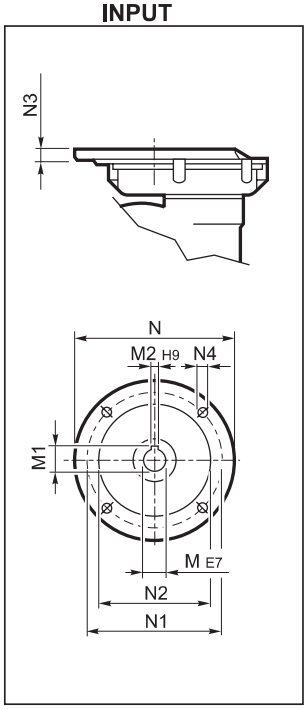

FA_

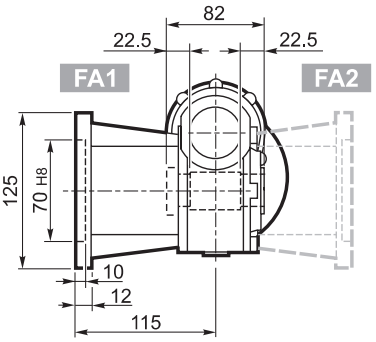

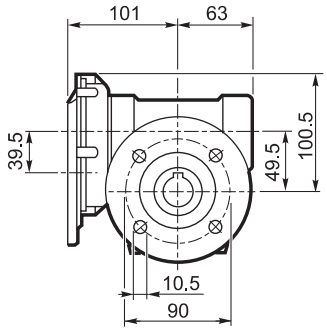

OUTPUT

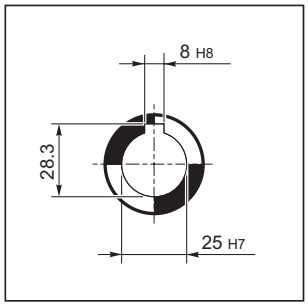

U

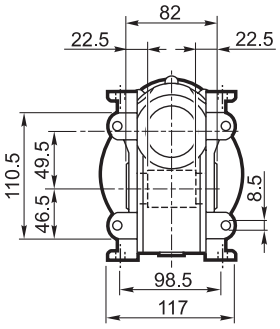

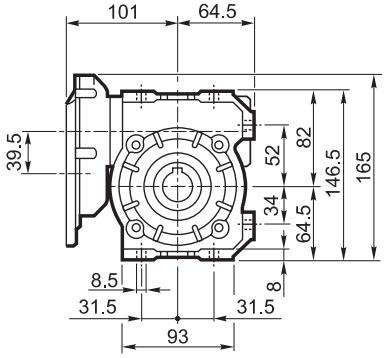

		M	M1	M2	N	N1	N2	N3	N4	Kg
VFR 49	**P63 B5**	11	12.8	4	140	115	95	11	M8 x 19	5.0

VF/VF 30/49...P (IEC)

A

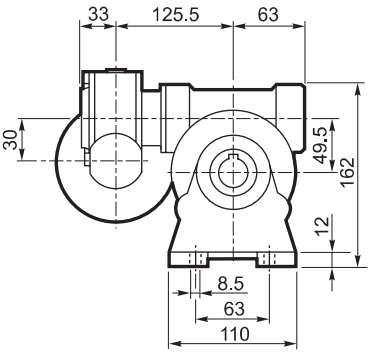

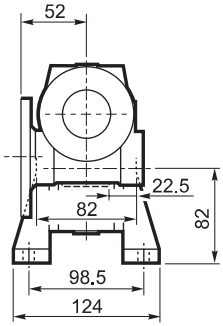

INPUT

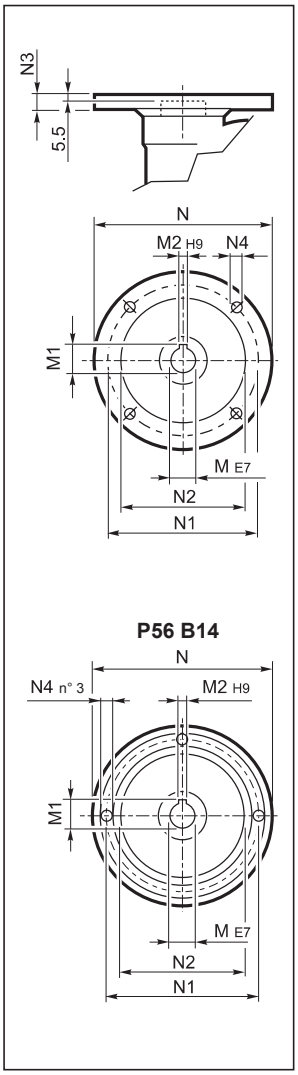

F_

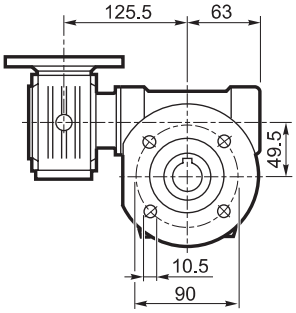

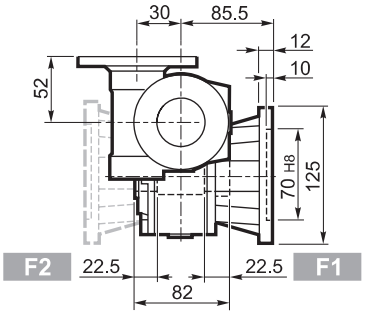

FA_

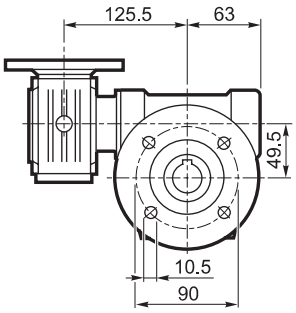

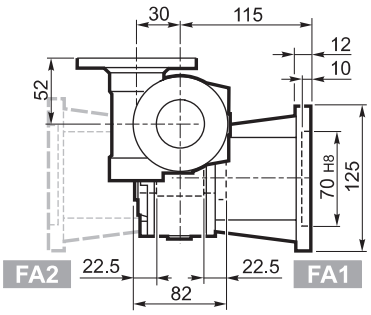

OUTPUT

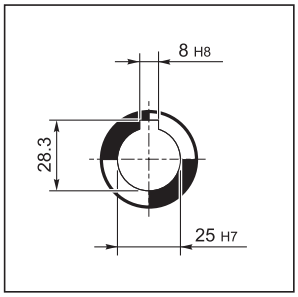

VF/VF 30/49...P (IEC)

P

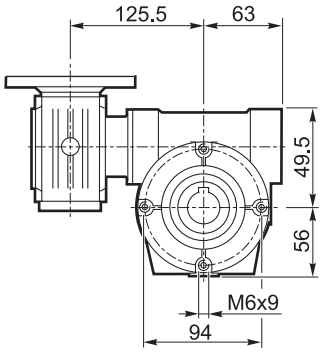

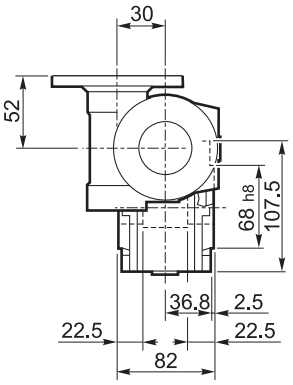

U

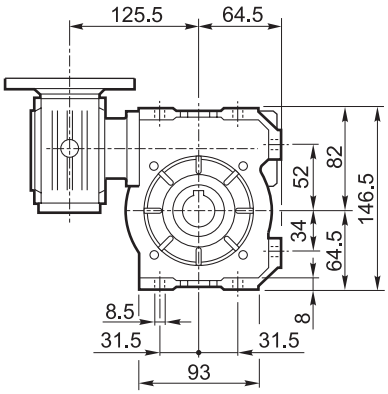

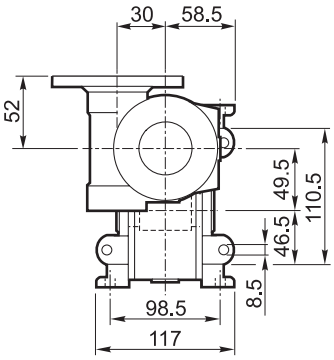

INPUT

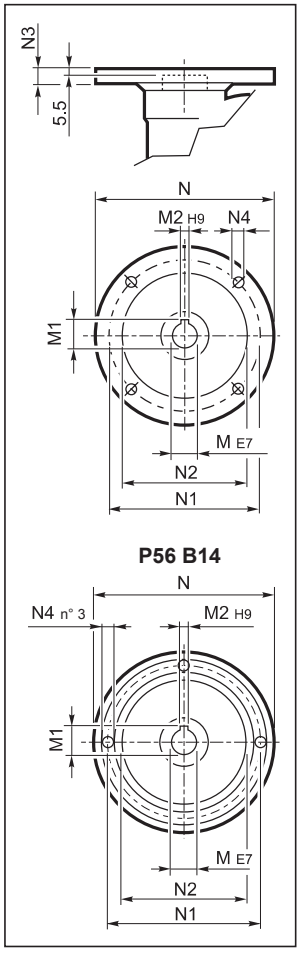

OUTPUT

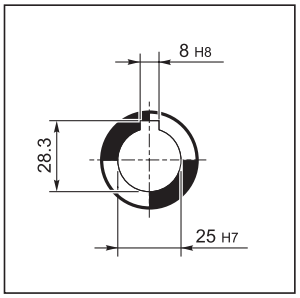

		M	M1	M2	N	N1	N2	N3	N4	Kg
VF/VF 30/49	**P56 B14**	9	10.4	3	80	65	50	7	5.5	4.5
VF/VF 30/49	**P63 B14**	11	12.8	4	90	75	60	6	5.5	

W 63...M

U

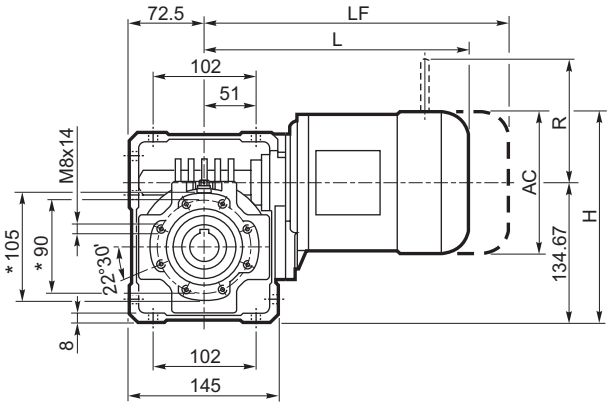

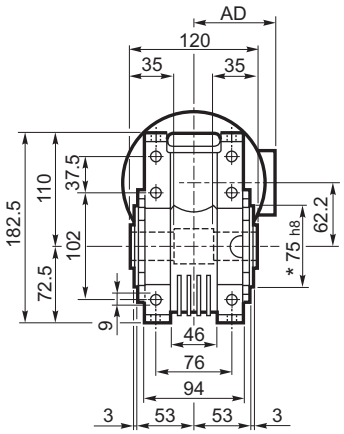

UF_

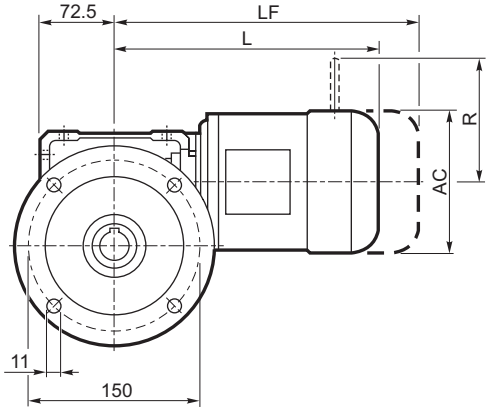

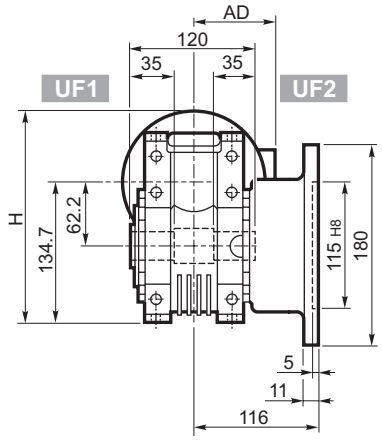

UFC_

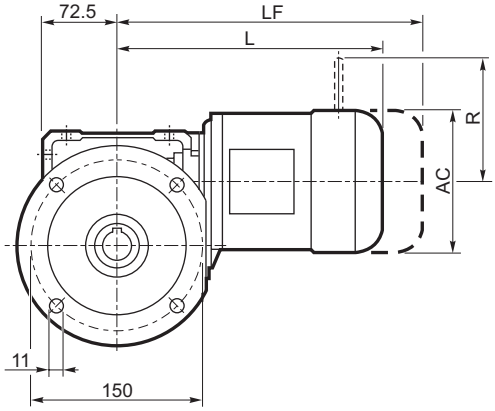

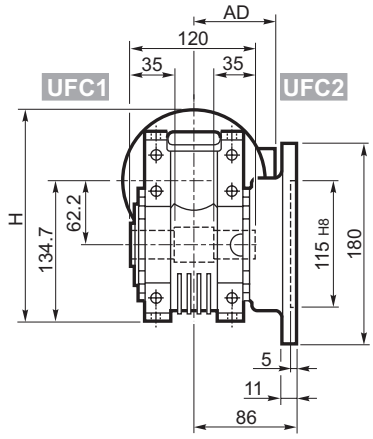

			M_					M...FD M...FA		M...FD		M...FA	
			AC	H	L	AD	Kg	LF	Kg	R	AD	R	AD
W 63	**S1**	**M1**	138	204	289	108	13	350	15	103	135	124	108
W 63	**S2**	**M2S**	156	213	317	119	17	393	20	129	146	134	119

OUTPUT

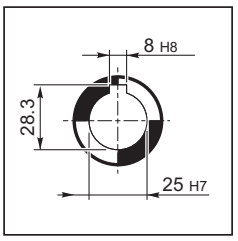

* On both sides

Bonfiglioli Riduttori

W 63...P (IEC)

U

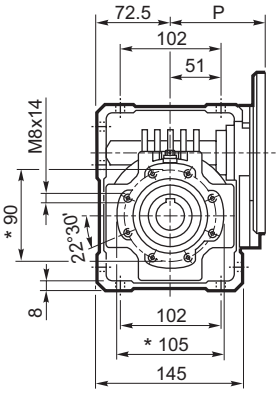

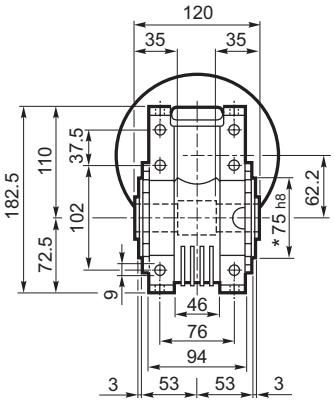

INPUT

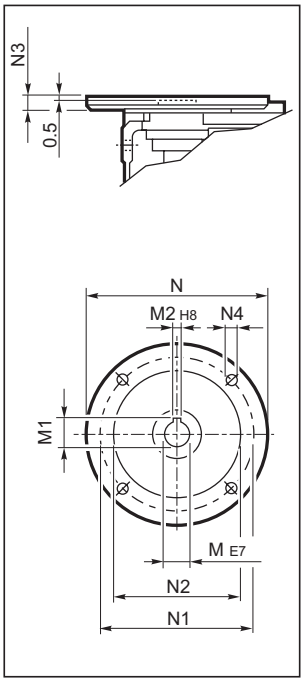

UF_

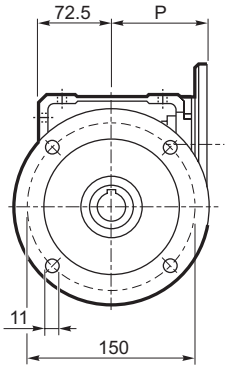

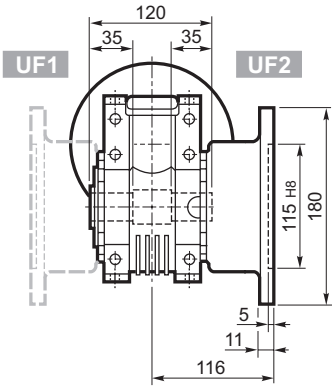

OUTPUT

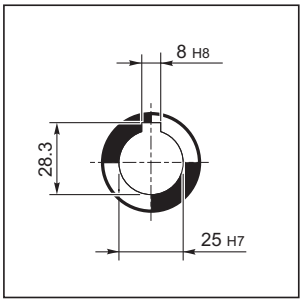

UFC_

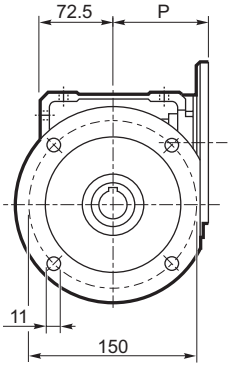

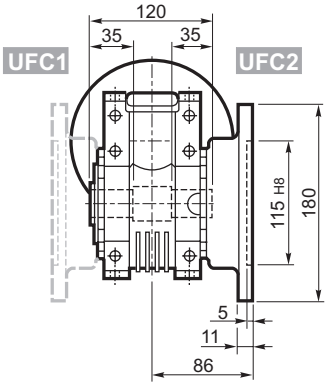

		M	M1	M2	N	N1	N2	N3	N4	P	Kg
W 63	**P71 B5**	14	16.3	5	160	130	110	11	9	95	6.3
W 63	**P80 B5**	19	21.8	6	200	165	130	12	11.5	102	6.5
W 63	**P90 B5**	24	27.3	8	200	165	130	12	11.5	102	6.4
W 63	**P71 B14**	14	16.3	5	105	85	70	11	6.5	95	6.1
W 63	**P80 B14**	19	21.8	6	120	100	80	11	6.5	102	6.3
W 63	**P90 B14**	24	27.3	8	140	115	95	11	8.5	102	6.3

WR 63...P (IEC)

U

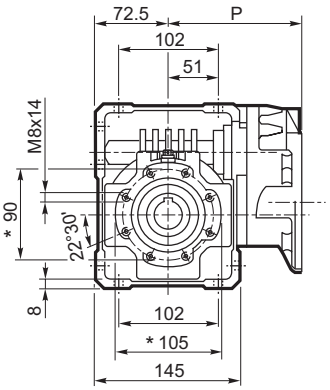

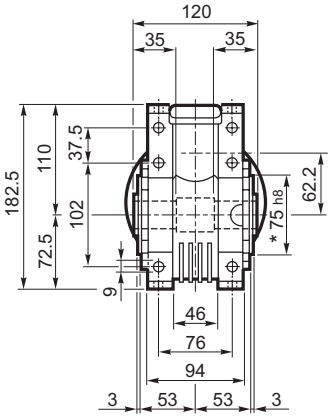

INPUT

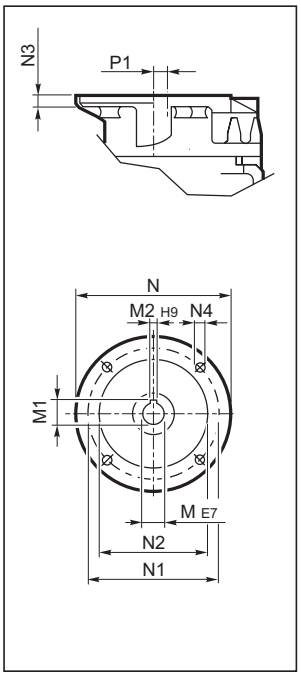

UF_

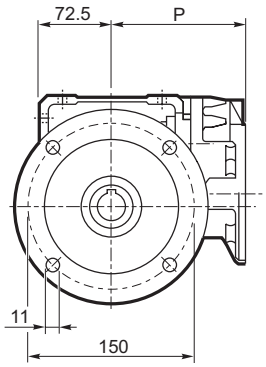

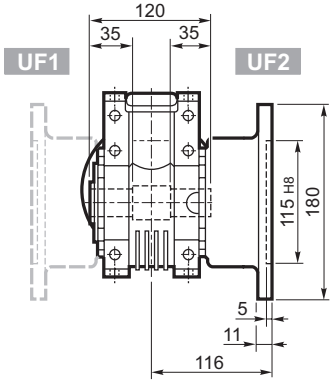

OUTPUT

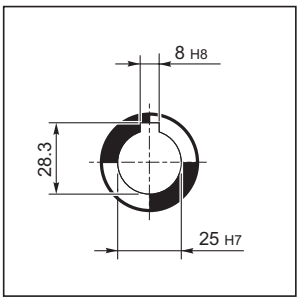

UFC_

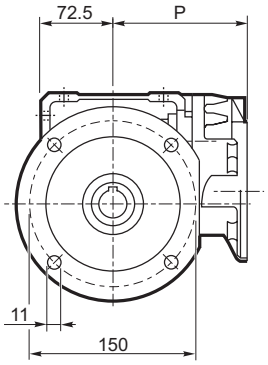

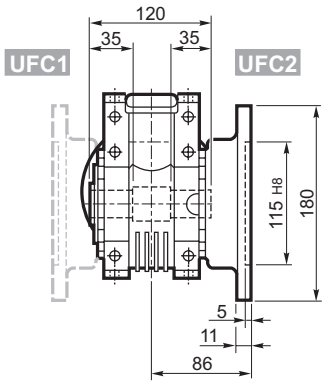

		M	M1	M2	N	N1	N2	N3	N4	P	P1	Kg
WR 63	**P63 B5**	11	12.8	4	140	115	95	10	M8x10	133.5	11.42	7.1
WR 63	**P71 B5**	14	16.3	5	160	130	110	10	M8x10	133.5	11.42	

* On both sides

VF/W 30/63...P (IEC)

U

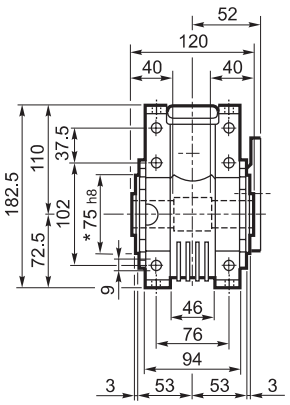

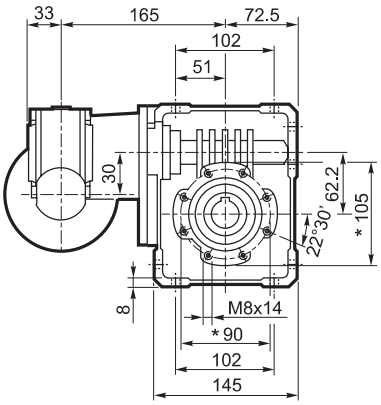

INPUT

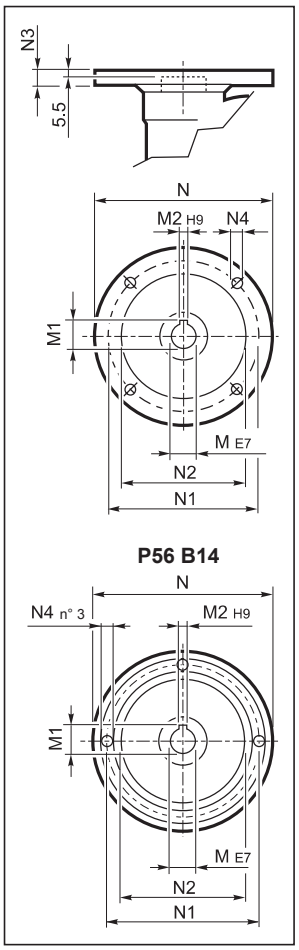

UF_

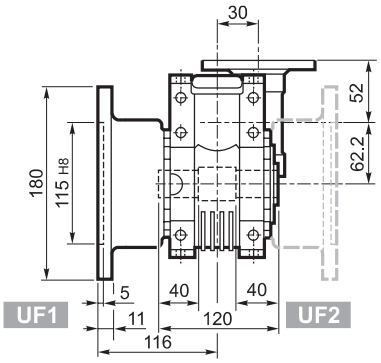

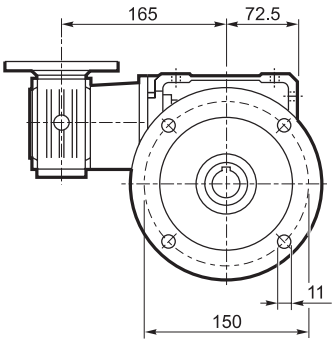

UFC_

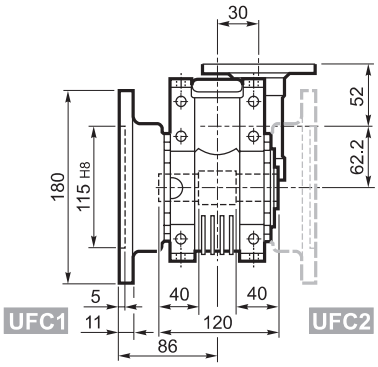

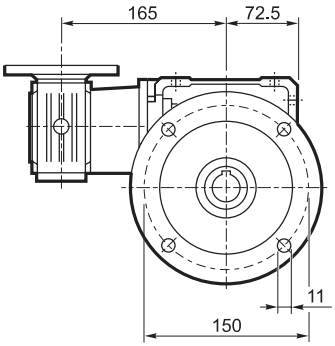

OUTPUT

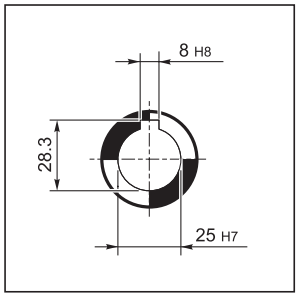

		M	M1	M2	N	N1	N2	N3	N4	Kg
VF/W 30/63	**P56 B5**	9	10.4	3	120	100	80	7	7	8.0
VF/W 30/63	**P63 B5**	11	12.8	4	140	115	95	8	9.5	
VF/W 30/63	**P56 B14**	9	10.4	3	80	65	50	7	5.5	
VF/W 30/63	**P63 B14**	11	12.8	4	90	75	60	6	5.5	

* On both sides

W 75...M

U

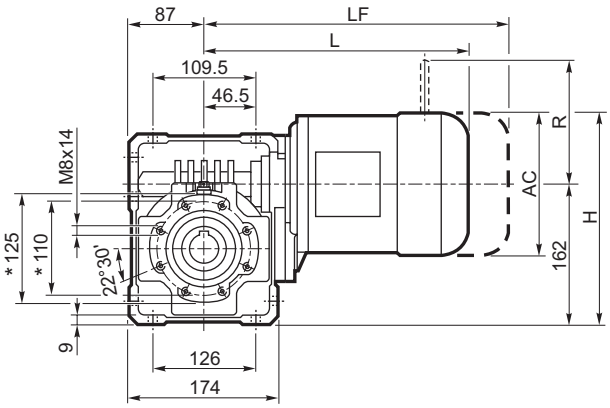

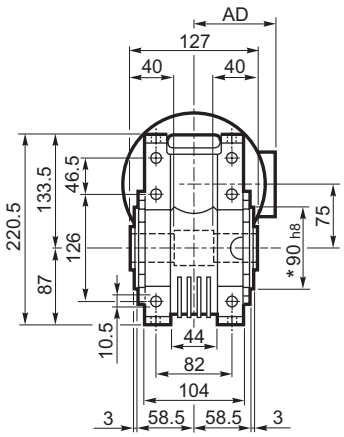

UF_

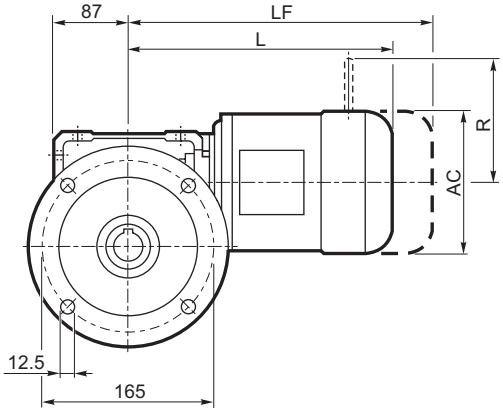

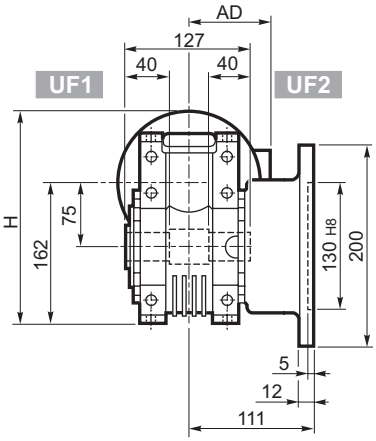

UFC_

UFCR_#

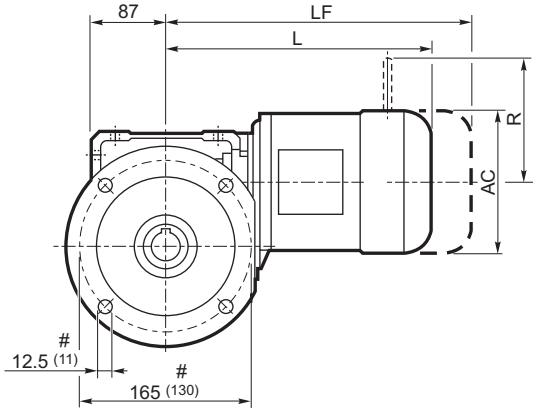

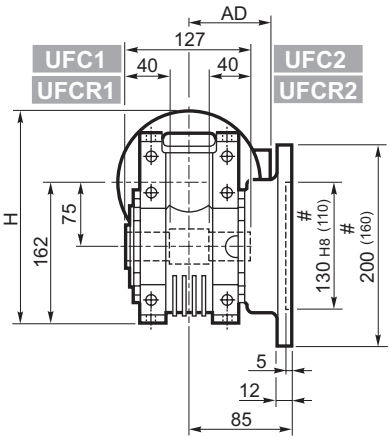

STANDARD OUTPUT

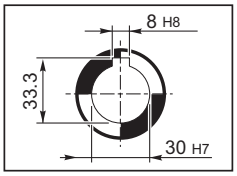

ON REQUEST OUTPUT

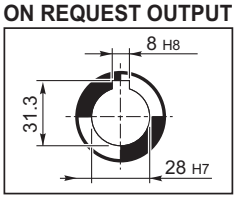

			M_					M...FD M...FA		M...FD		M...FA	
			AC	H	L	AD	Kg	LF	Kg	R	AD	R	AD
W 75	**S1**	**M1**	138	231	308	108	16.0	369	18.2	103	135	124	108
W 75	**S2**	**M2S**	153	240	333	119	18.5	409	21.6	129	146	134	119
W 75	**S3**	**M3S**	193	258.5	376	142	25.6	472	31	160	158	160	142
W 75	**S3**	**M3L**	193	258.5	408	142	28.6	499	34	160	158	160	142

* On both sides # Reduced flange

Bonfiglioli Riduttori

W 75...P (IEC)

U

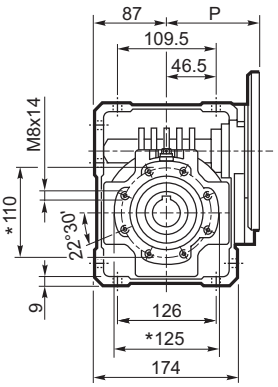

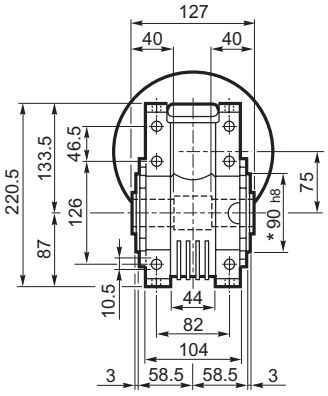

UF_

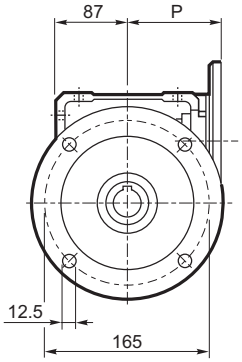

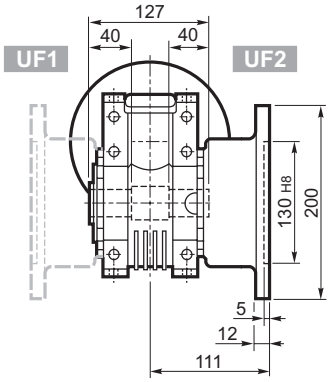

UFC_

UFCR_#

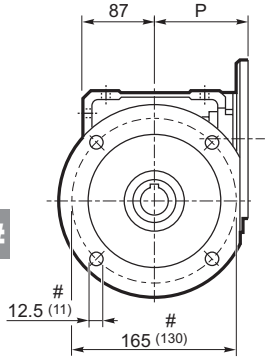

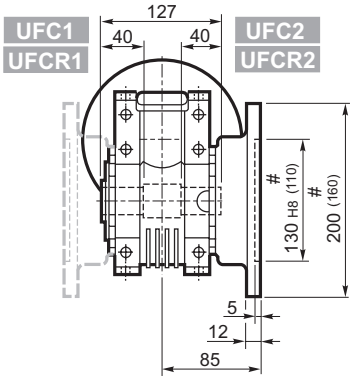

INPUT

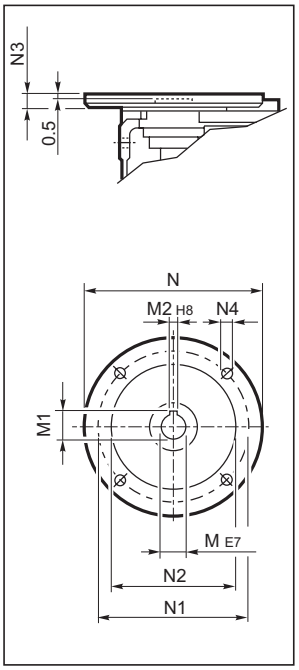

STANDARD OUTPUT

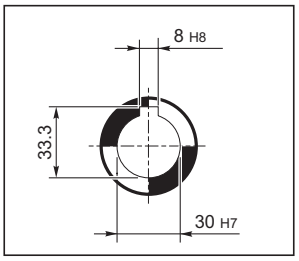

ON REQUEST OUTPUT

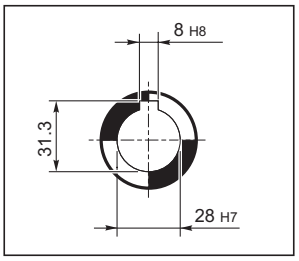

		M	M1	M2	N	N1	N2	N3	N4	P	Kg
W 75	**P71 B5**	14	16.3	5	160	130	110	11	9	112	9.5
W 75	**P80 B5**	19	21.8	6	200	165	130	12	11.5	112	9.7
W 75	**P90 B5**	24	27.3	8	200	165	130	12	11.5	112	9.6
W 75	**P100 B5**	28	31.3	8	250	215	180	13	12.5	120	9.7
W 75	**P112 B5**	28	31.3	8	250	215	180	13	12.5	120	9.7
W 75	**P80 B14**	19	21.8	6	120	100	80	7.5	6.5	112	9.4
W 75	**P90 B14**	24	27.3	8	140	115	95	7.5	8.5	112	9.4
W 75	**P100 B14**	28	31.3	8	160	130	110	10	8.5	120	9.5
W 75	**P112 B14**	28	31.3	8	160	130	110	10	8.5	120	9.5

* On both sides # Reduced flange

WR 75...P (IEC)

U

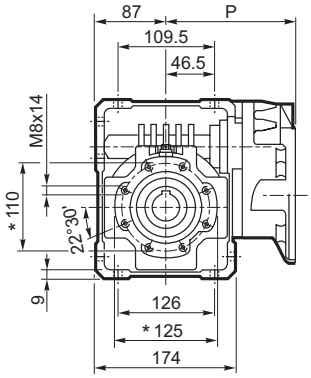

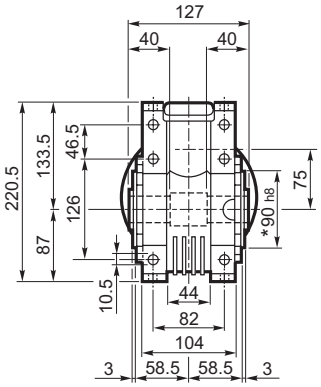

INPUT

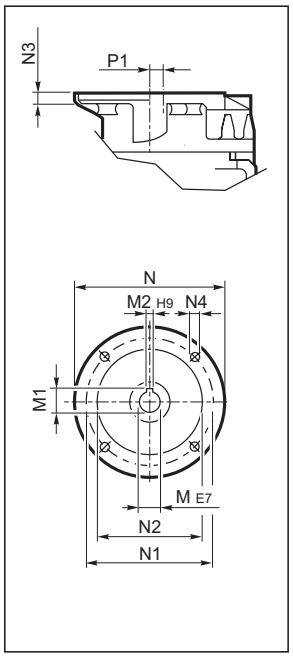

UF_

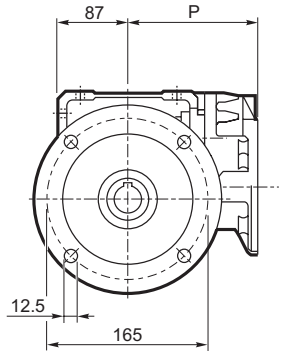

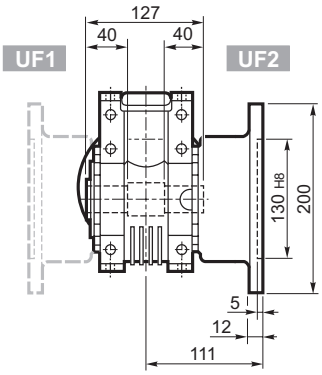

STANDARD OUTPUT

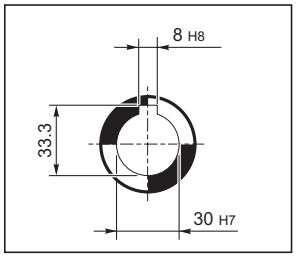

UFC_

UFCR_#

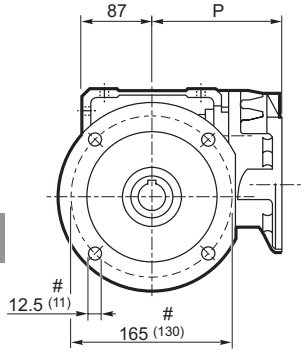

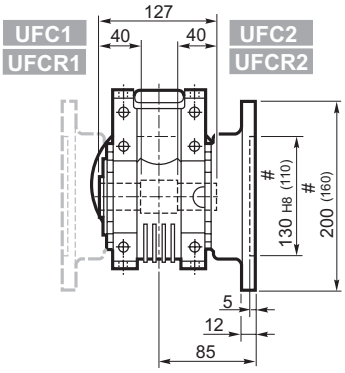

ON REQUEST OUTPUT

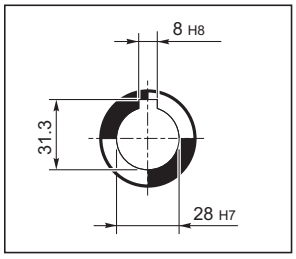

		M	M1	M2	N	N1	N2	N3	N4	P	P1	Kg
WR 75	**P63 B5**	11	12.8	4	140	115	95	10	M8x10	152	23.53	10.6
WR 75	**P71 B5**	14	16.3	5	160	130	110	10	M8x10	152	23.53	10.7
WR 75	**P80 B5**	19	21.8	6	200	165	130	12	M10x13	163.5	11	11.5
WR 75	**P90 B5**	24	27.3	8	200	165	130	12	M10x13	163.5	11	11.6

* On both sides # Reduced flange

VF/W 44/75...P (IEC)

U

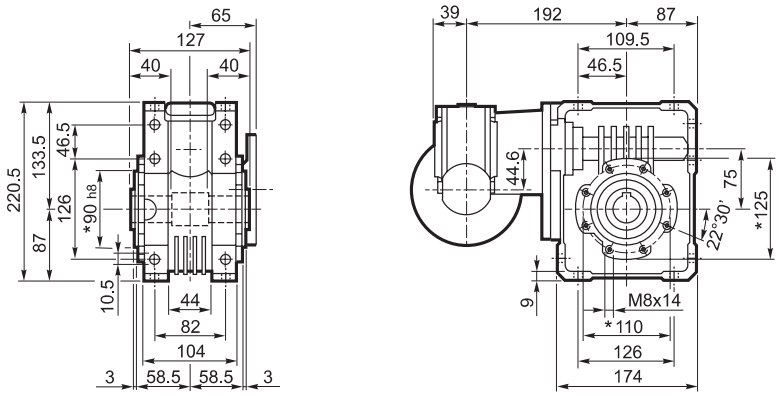

INPUT

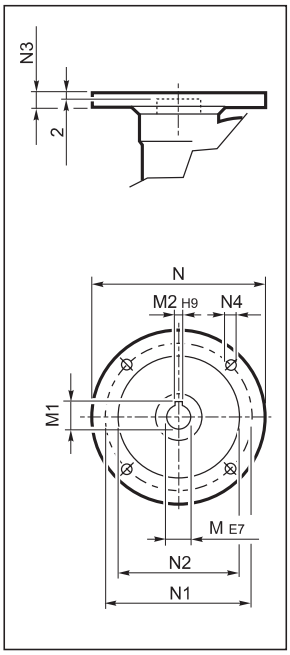

UF_

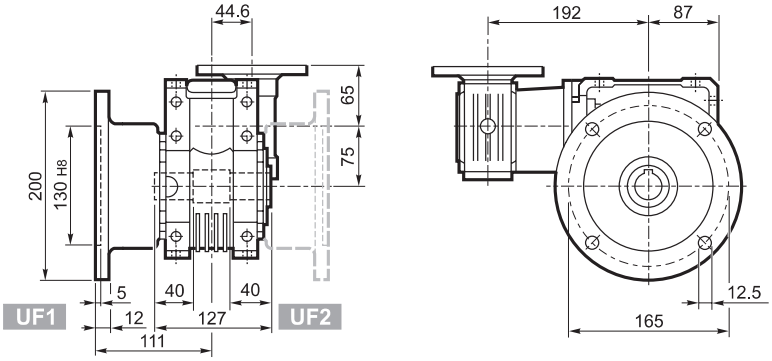

STANDARD OUTPUT

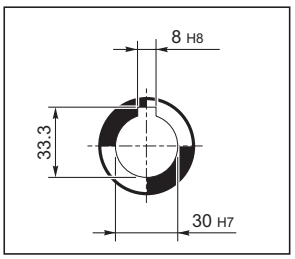

UFC_
UFCR_#

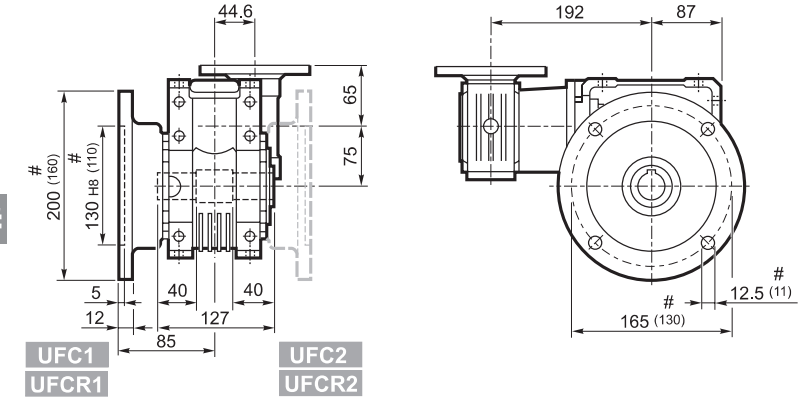

ON REQUEST OUTPUT

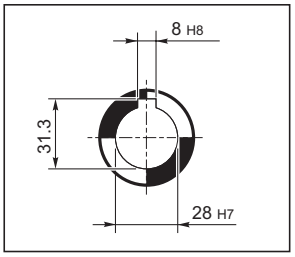

		M	M1	M2	N	N1	N2	N3	N4	Kg
VF/W 44/75	**P63 B5**	11	12.8	4	140	115	95	10	9.5	12.5
VF/W 44/75	**P71 B5**	14	16.3	5	160	130	110	10	9.5	
VF/W 44/75	**P63 B14**	11	12.8	4	90	75	60	8	5.5	
VF/W 44/75	**P71 B14**	14	16.3	5	105	85	70	10	7	

* On both sides # Reduced flange

W 86...M

U

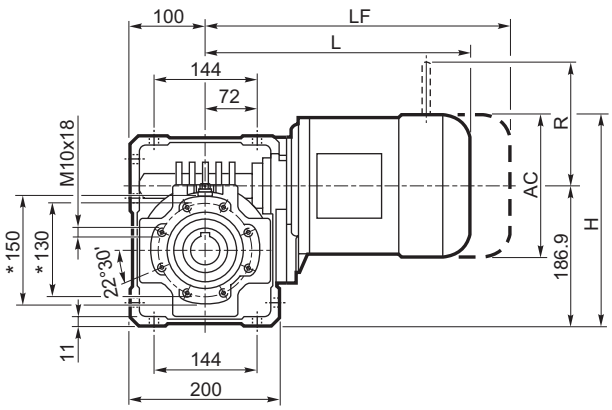

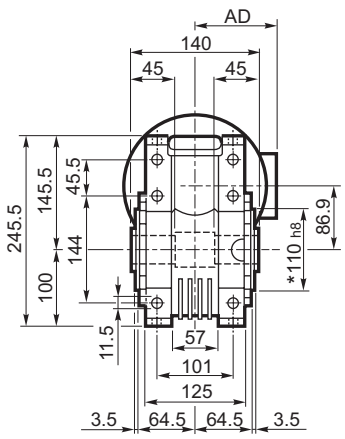

UF_

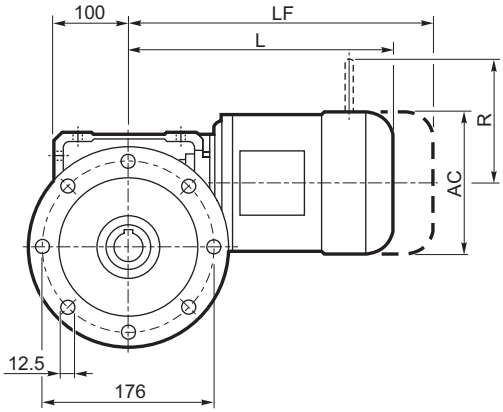

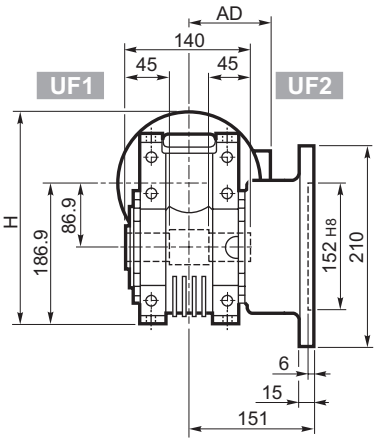

UFC_

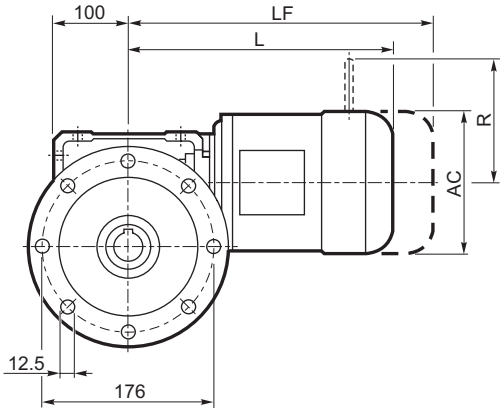

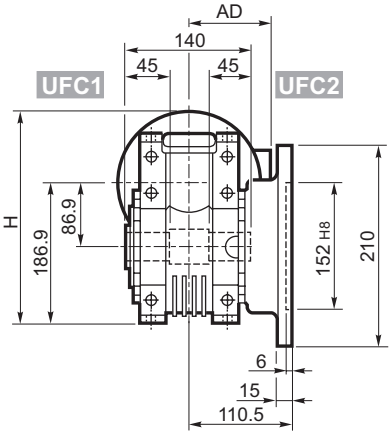

			M_					M...FD M...FA		M...FD		M...FA	
			AC	H	L	AD	Kg	LF	Kg	R	AD	R	AD
W 86	S1	M1	138	256	324	108	20.1	385	22.3	103	135	124	108
W 86	S2	M2S	156	265	349	119	22.6	425	25.7	129	146	134	119
W 86	S3	M3S	193	283.5	392	142	29.7	488	35	160	158	160	142
W 86	S3	M3L	193	283.5	424	142	33	515	36	160	158	160	142

* On both sides

OUTPUT

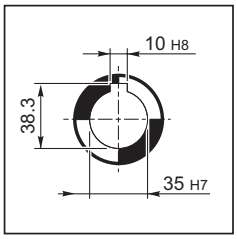

W 86...P (IEC)

U

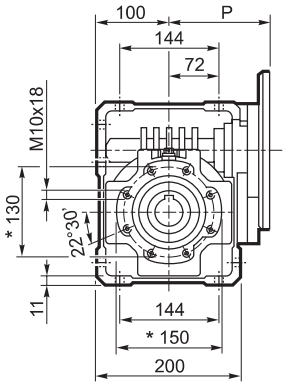

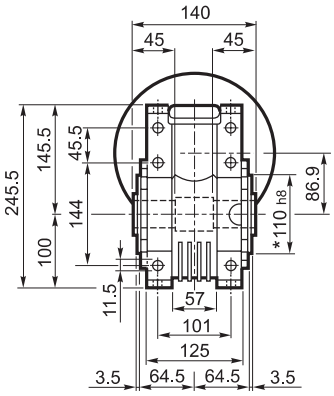

INPUT

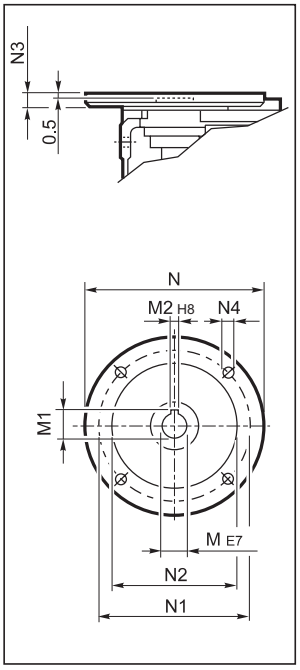

UF_

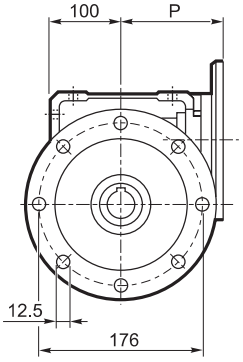

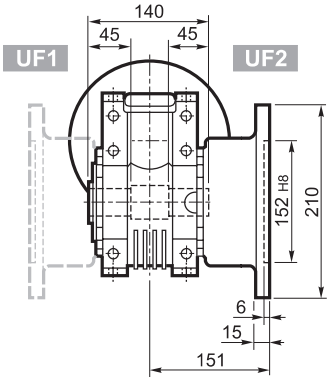

OUTPUT

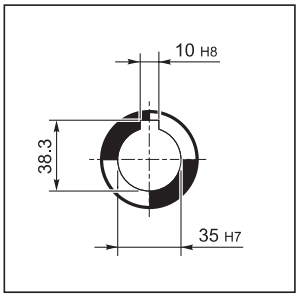

UFC_

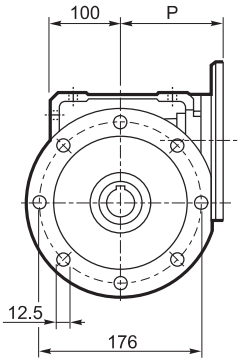

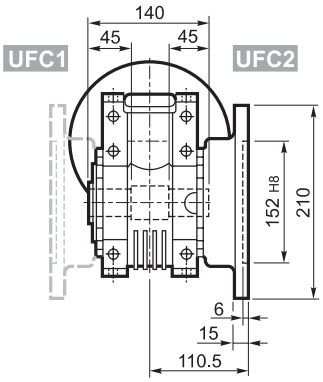

		M	M1	M2	N	N1	N2	N3	N4	P	Kg
W 86	**P71 B5**	14	16.3	5	160	130	110	11	9	128	13.6
W 86	**P80 B5**	19	21.8	6	200	165	130	12	11.5	128	13.8
W 86	**P90 B5**	24	27.3	8	200	165	130	12	11.5	128	13.7
W 86	**P100 B5**	28	31.3	8	250	215	180	13	12.5	136	13.8
W 86	**P112 B5**	28	31.3	8	250	215	180	13	12.5	136	13.8
W 86	**P80 B14**	19	21.8	6	120	100	80	7.5	6.5	128	13.5
W 86	**P90 B14**	24	27.3	8	140	115	95	7.5	8.5	128	13.5
W 86	**P100 B14**	28	31.3	8	160	130	110	10	8.5	136	13.6
W 86	**P112 B14**	28	31.3	8	160	130	110	10	8.5	136	13.6

* On both sides

WR 86...P (IEC)

U

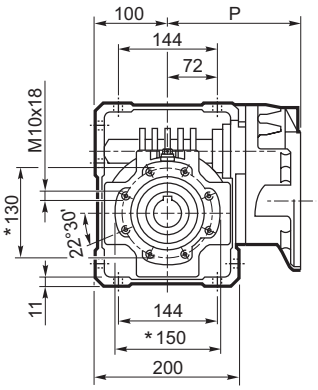

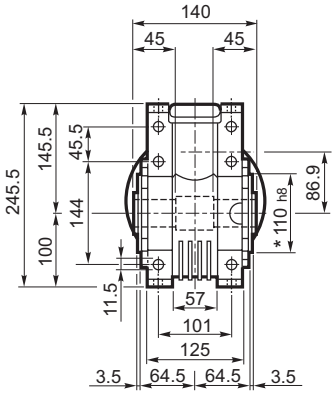

INPUT

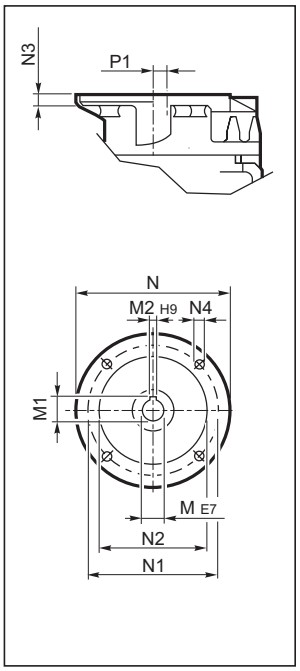

UF_

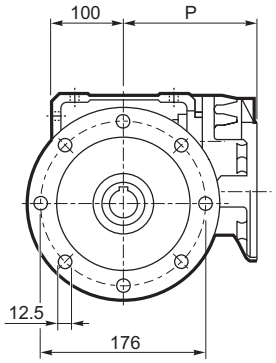

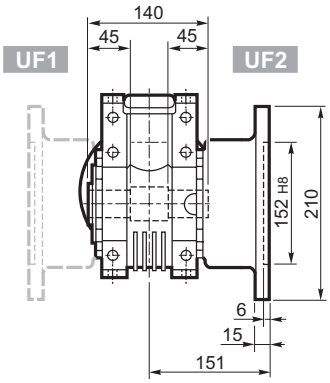

OUTPUT

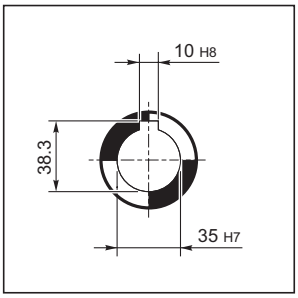

UFC_

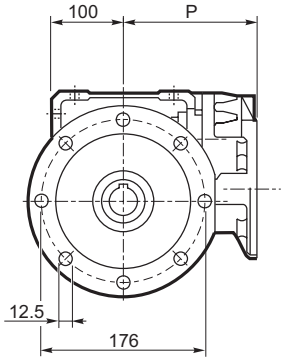

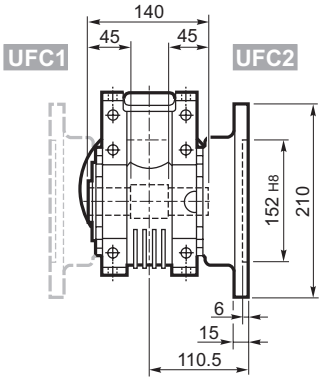

		M	M1	M2	N	N1	N2	N3	N4	P	P1	Kg
WR 86	**P63 B5**	11	12.8	4	140	115	95	10	M8x10	168	35.4	14.3
WR 86	**P71 B5**	14	16.3	5	160	130	110	10	M8x10	168	35.4	14.4
WR 86	**P80 B5**	19	21.8	6	200	165	130	12	M10x13	179.5	22.9	15.2
WR 86	**P90 B5**	24	27.3	8	200	165	130	12	M10x13	179.5	22.9	15.3

* On both sides

Bonfiglioli Riduttori

VF/W 44/86... P (IEC)

U

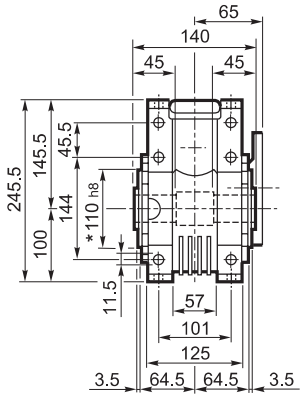

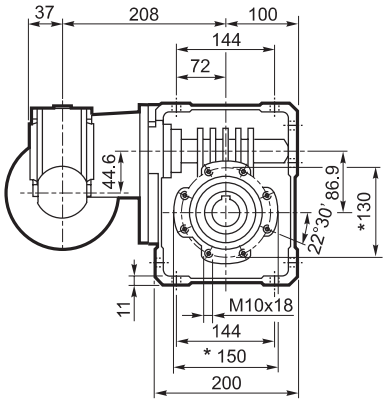

INPUT

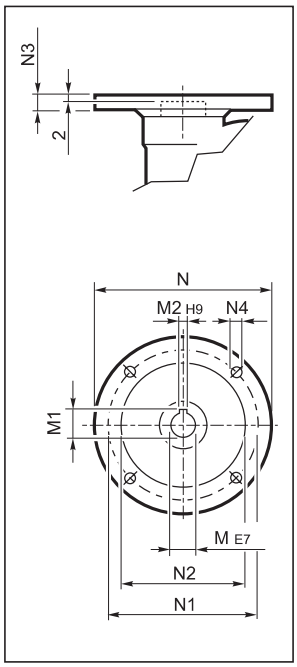

UF_

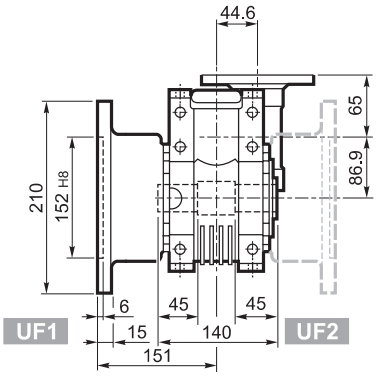

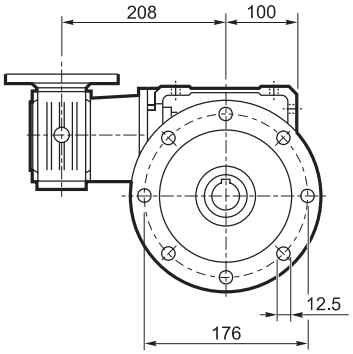

OUTPUT

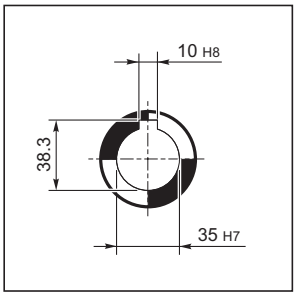

UFC_

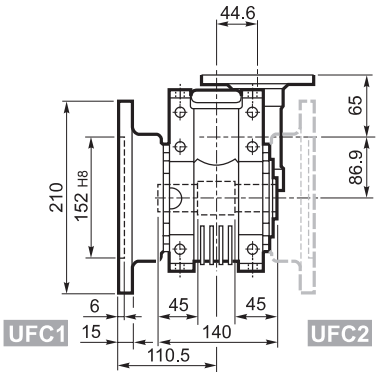

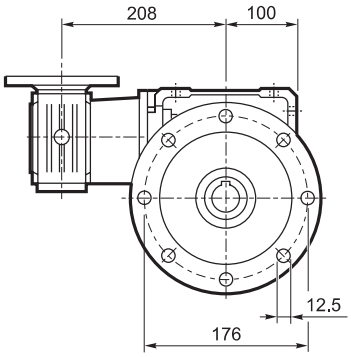

		M	M1	M2	N	N1	N2	N3	N4	Kg
VF/W 44/86	**P63 B5**	11	12.8	4	140	115	95	10	9.5	16.6
VF/W 44/86	**P71 B5**	14	16.3	5	160	130	110	10	9.5	
VF/W 44/86	**P63 B14**	11	12.8	4	90	75	60	8	5.5	
VF/W 44/86	**P71 B14**	14	16.3	5	105	85	70	10	7	

* On both sides

W 110...M

U

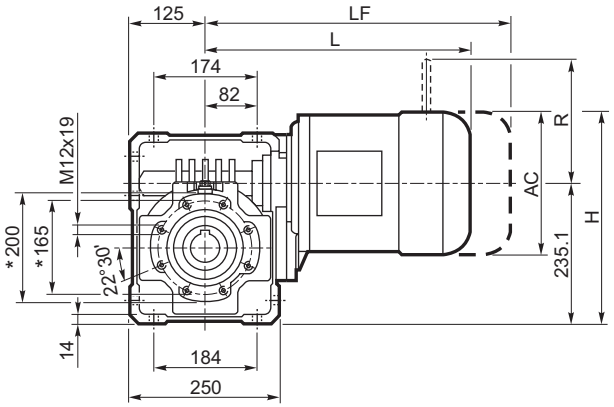

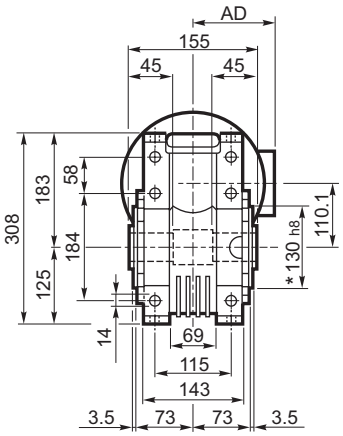

UF_

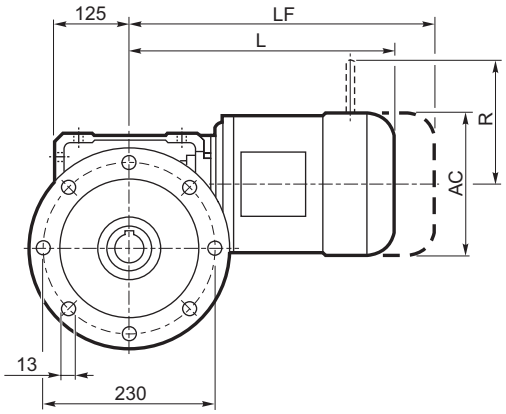

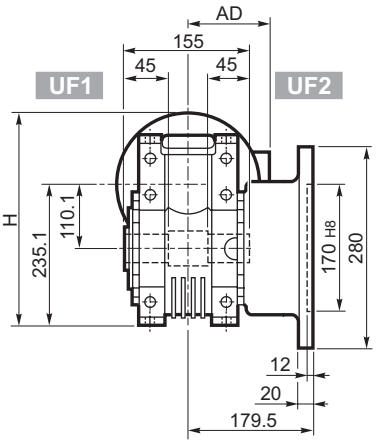

UFC_

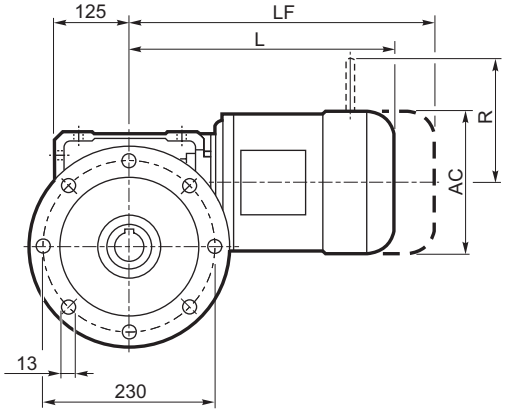

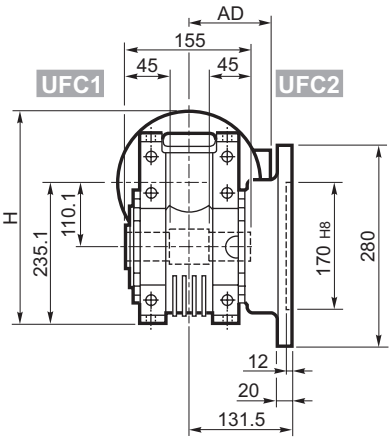

			M_					M...FD M...FA		M...FD		M...FA	
			AC	H	L	AD	Kg	LF	Kg	R	AD	R	AD
W 110	**S2**	**M2S**	156	313	364	119	38	440	41	129	146	134	119
W 110	**S3**	**M3S**	193	332	407	142	46	503	50	160	158	160	142
W 110	**S3**	**M3L**	193	332	439	142	48	530	53	160	158	160	142

* On both sides

OUTPUT

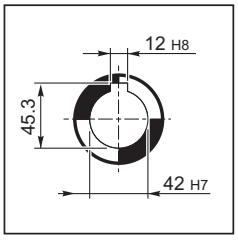

Bonfiglioli Riduttori

W 110...P (IEC)

U

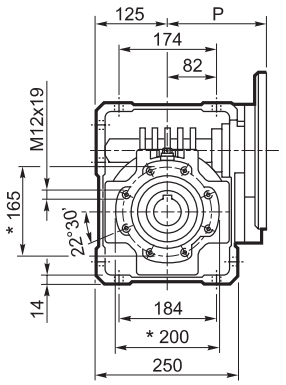

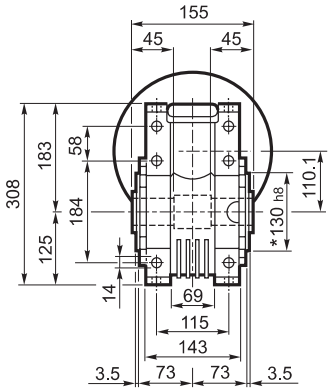

INPUT

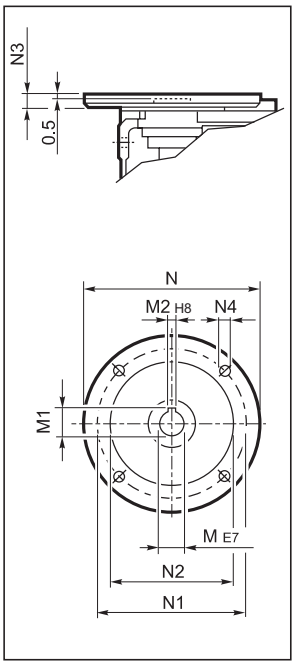

UF_

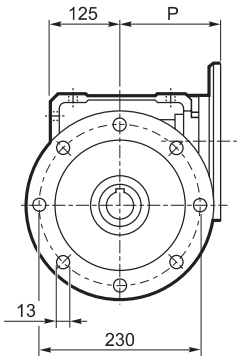

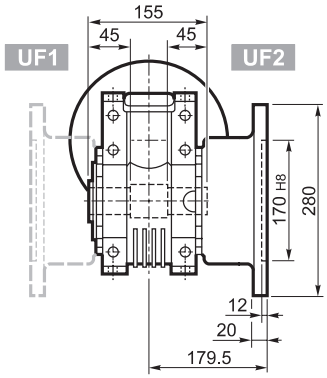

OUTPUT

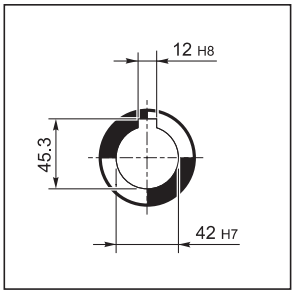

UFC_

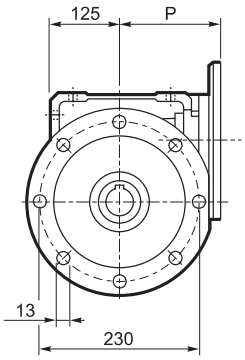

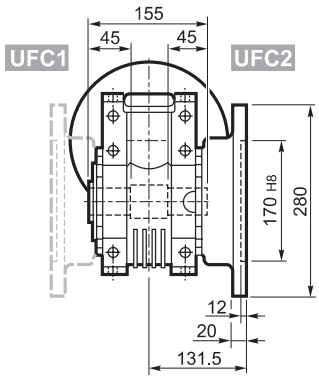

		M	M1	M2	N	N1	N2	N3	N4	P	Kg
W 110	**P80 B5**	19	21.8	6	200	165	130	—	M10x12	143	28
W 110	**P90 B5**	24	27.3	8	200	165	130	—	M10x12	143	28
W 110	**P100 B5**	28	31.3	8	250	215	180	13	13	151	29
W 110	**P112 B5**	28	31.3	8	250	215	180	13	13	151	29
W 110	**P132 B5**	38	41.3	10	300	265	230	16	14	226	31
W 110	**P80 B14**	19	21.8	6	120	100	80	7.5	7	143	27.5
W 110	**P90 B14**	24	27.3	8	140	115	95	6.5	9	143	27.5
W 110	**P100 B14**	28	31.3	8	160	130	110	13	9	151	27
W 110	**P112 B14**	28	31.3	8	160	130	110	13	9	151	27

* On both sides

WR 110...P (IEC)

U

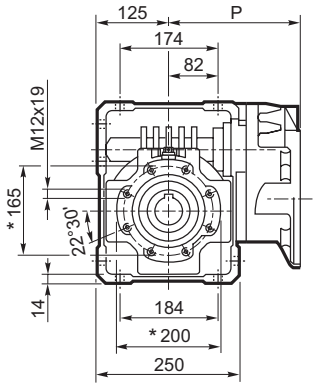

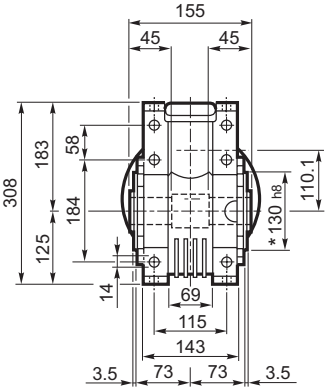

INPUT

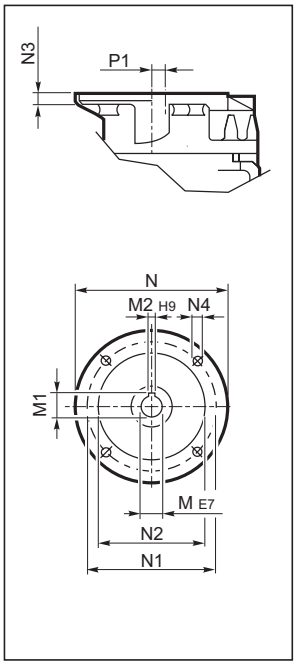

UF_

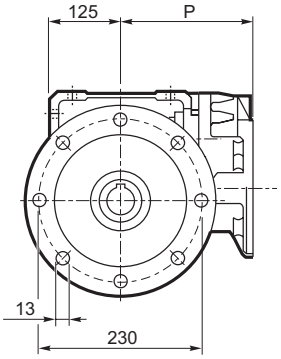

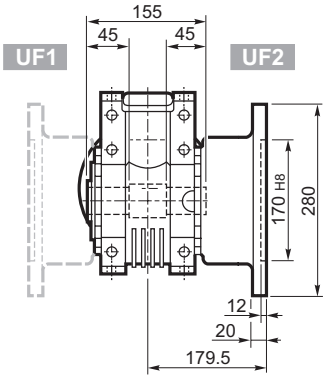

OUTPUT

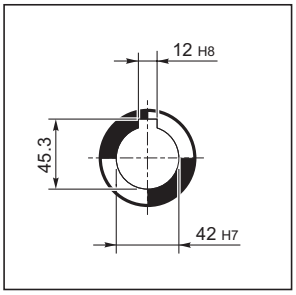

UFC_

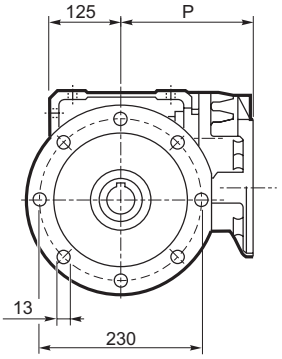

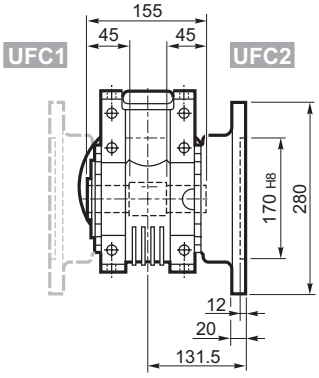

		M	M1	M2	N	N1	N2	N3	N4	P	P1	Kg
WR 110	**P71 B5**	14	16.3	5	160	130	110	10	M8x14	185	58.6	30.5
WR 110	**P80 B5**	19	21.8	6	200	165	130	14	M10x15	204	21.1	31
WR 110	**P90 B5**	24	27.3	8	200	165	130	14	M10x15	204	21.1	31
WR 110	**P100 B5**	28	31.3	8	250	215	180	14	M12x13	213	21.1	32
WR 110	**P112 B5**	28	31.3	8	250	215	180	14	M12x13	213	21.1	32

* On both sides

VF/W 49/110...P (IEC)

U

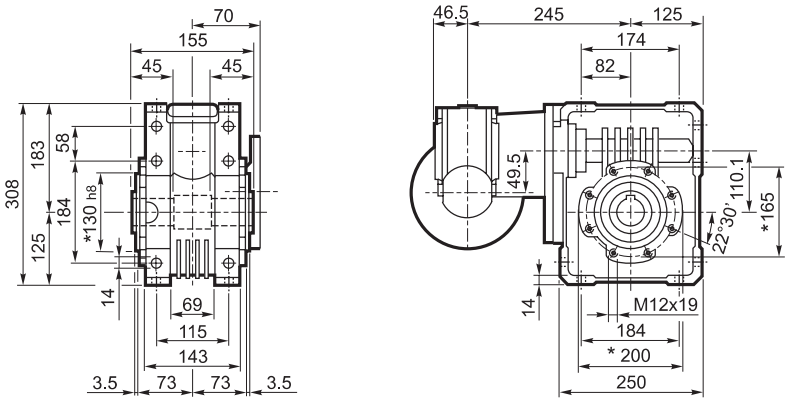

INPUT

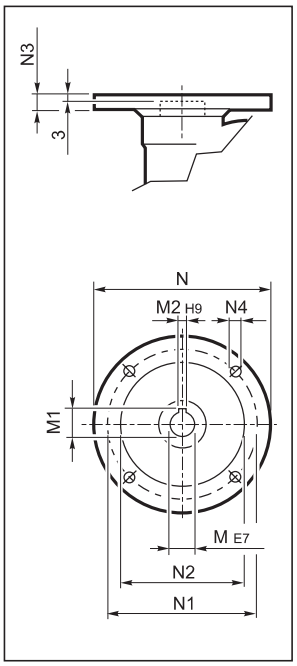

UF_

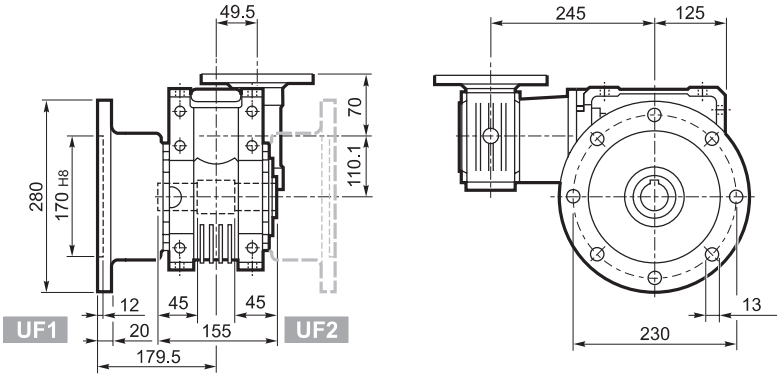

OUTPUT

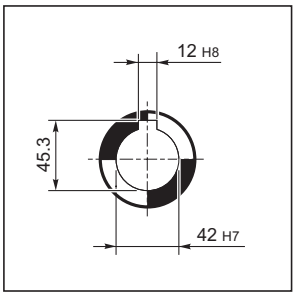

UFC_

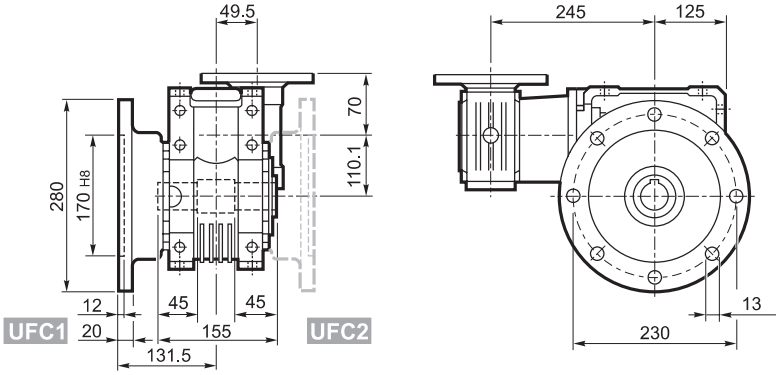

		M	M1	M2	N	N1	N2	N3	N4	Kg
VF/W 49/110	**P63 B5**	11	12.8	4	140	115	95	10.5	9.5	33
VF/W 49/110	**P71 B5**	14	16.3	5	160	130	110	10.5	9.5	
VF/W 49/110	**P80 B5**	19	21.8	6	200	165	130	10	11.5	
VF/W 49/110	**P63 B14**	11	12.8	4	90	75	60	7	6	
VF/W 49/110	**P71 B14**	14	16.3	5	105	85	70	10.5	6.5	
VF/W 49/110	**P80 B14**	19	21.8	6	120	100	80	10	7	

* On both sides

VF 130...P (IEC)

A

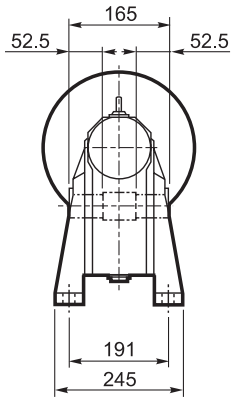

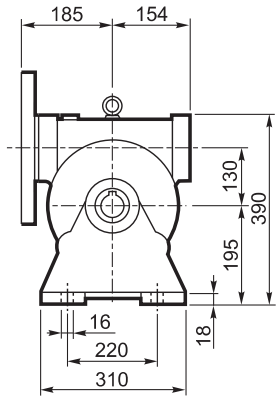

N

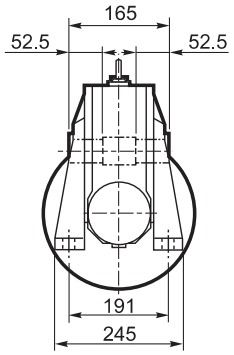

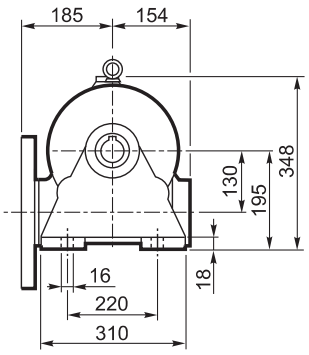

V

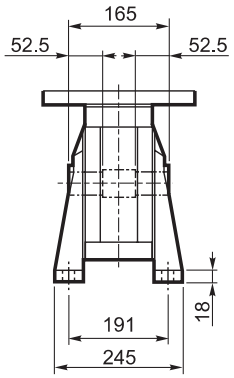

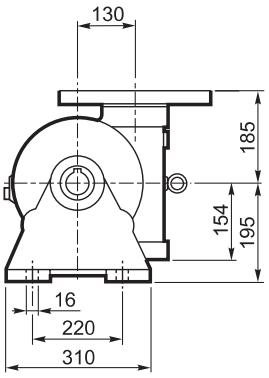

INPUT

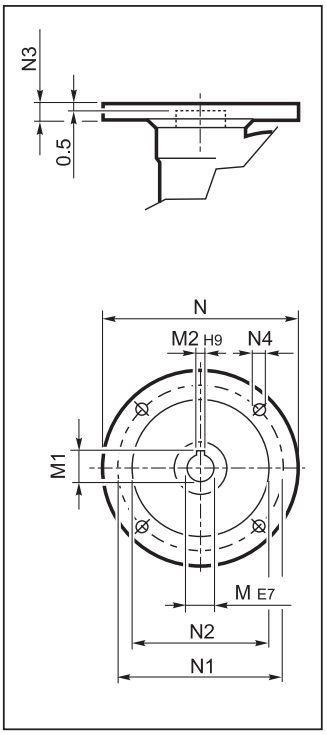

OUTPUT

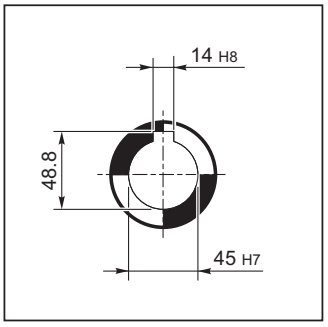

VF 130...P (IEC)

F_

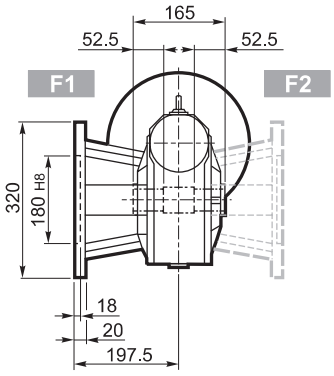

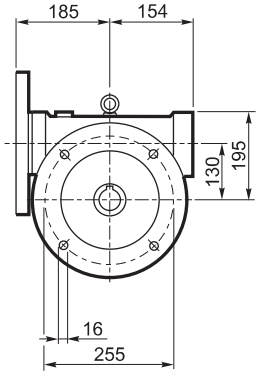

INPUT

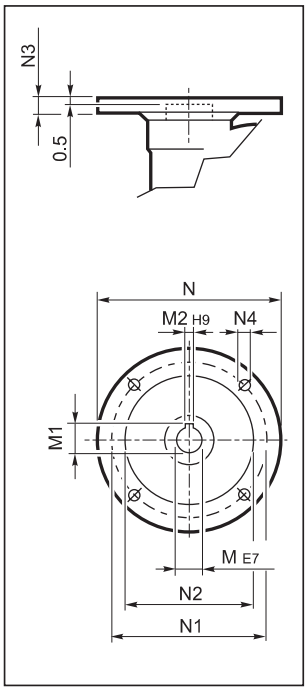

FC_

FR_

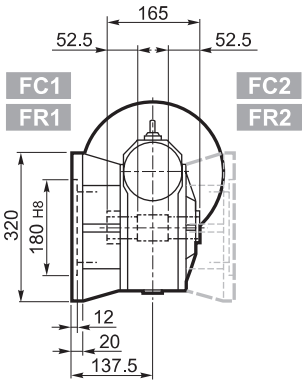

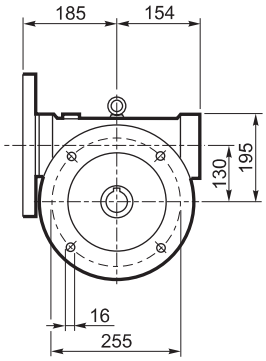

OUTPUT

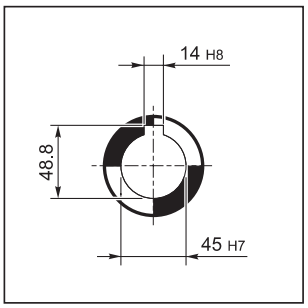

P_

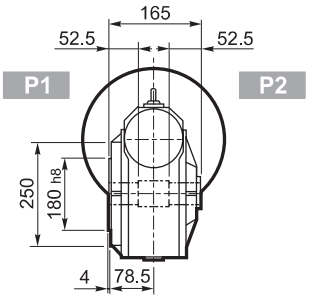

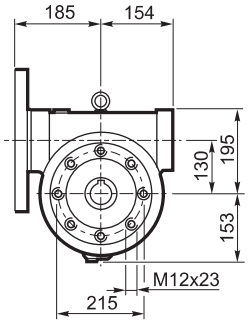

		M	M1	M2	N	N1	N2	N3	N4	Kg
VF130	**P90 B5**	24	27.3	8	200	165	130	17	11	49
VF130	**P100 B5**	28	31.3	8	250	215	180	17	13	
VF130	**P112 B5**	28	31.3	8	250	215	180	17	13	
VF130	**P132 B5**	38	40.1#	10	300	265	230	17	13	

Lowered key

VFR 130...P (IEC)

A

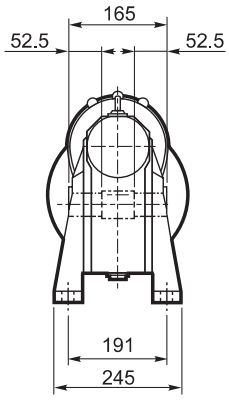

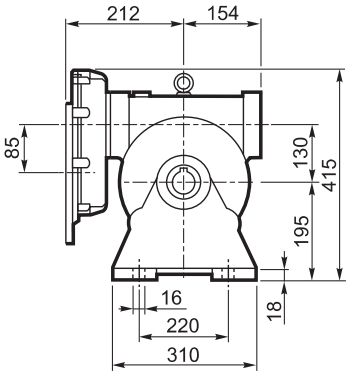

INPUT

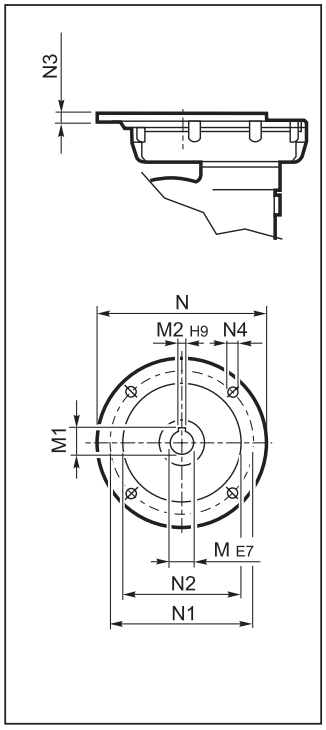

N

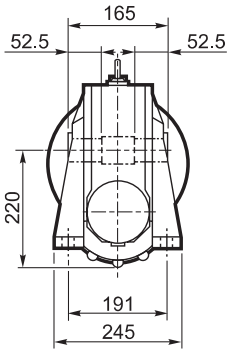

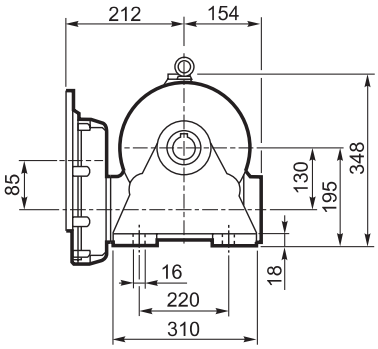

OUTPUT

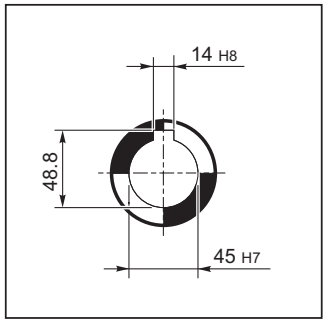

V

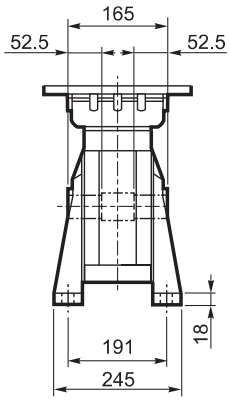

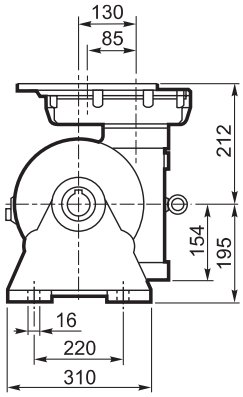

VFR 130...P (IEC)

F_

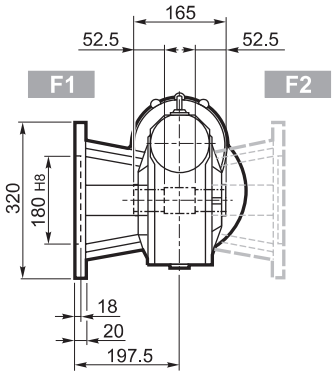

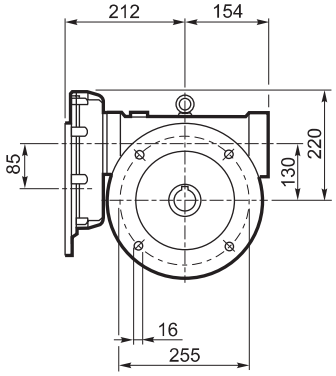

INPUT

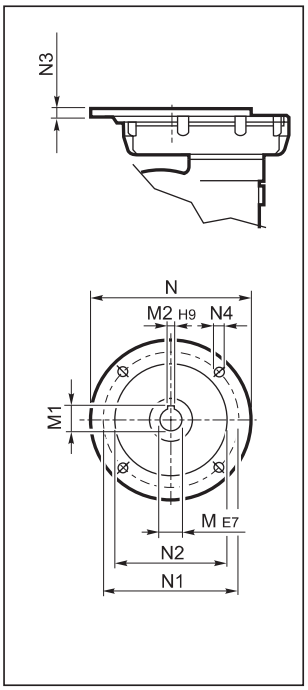

FC_

FR_

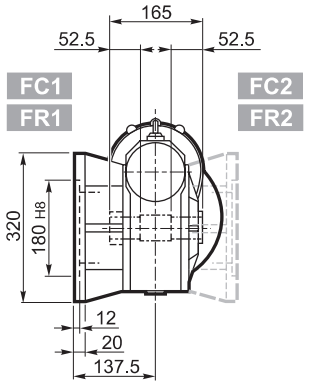

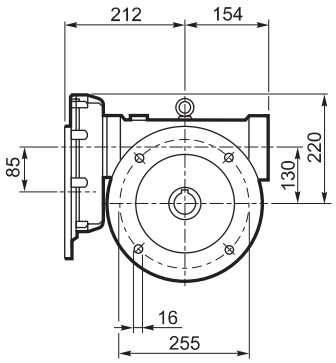

OUTPUT

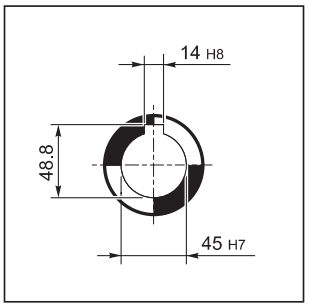

P_

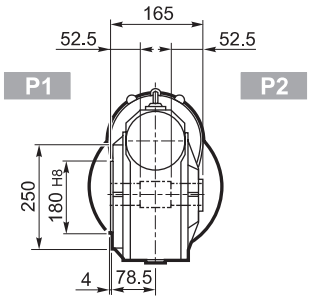

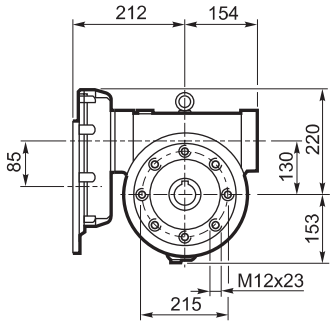

		M	M1	M2	N	N1	N2	N3	N4	Kg
VFR 130	**P80 B5**	19 K6	21.8	6	200	165	130	12	M10x25	57
VFR 130	**P90 B5**	24 K6	27.3	8	200	165	130	12	M10x25	
VFR 130	**P100 B5**	28 J6	29.1#	8	250	215	180	13	M12x35	
VFR 130	**P112 B5**	28 J6	29.1#	8	250	215	180	13	M12x35	

Lowered key

W/VF 63/130...M

A

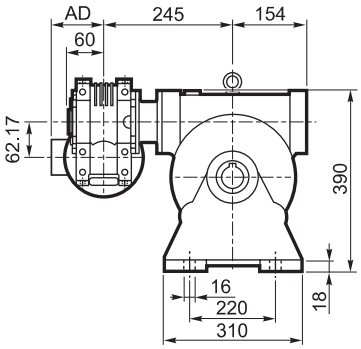

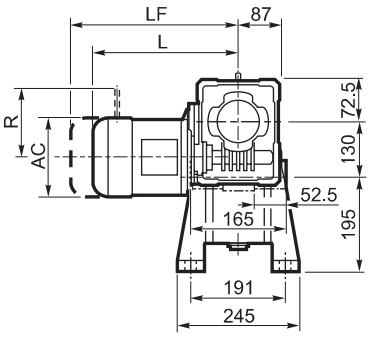

F_

FC_

FR_

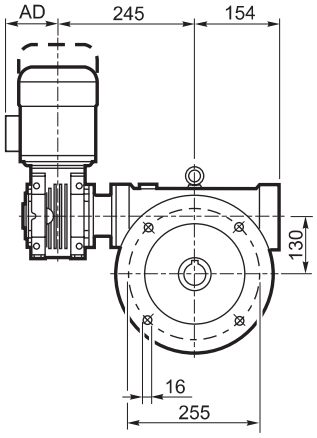

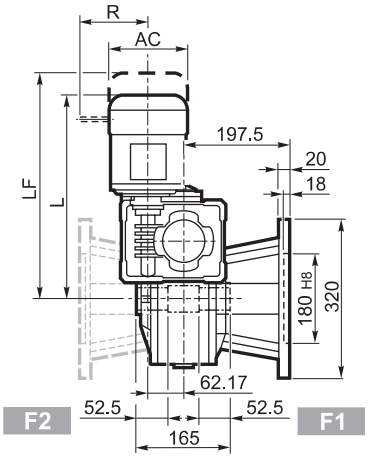

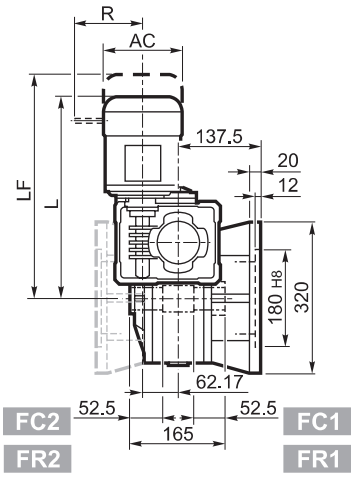

P_

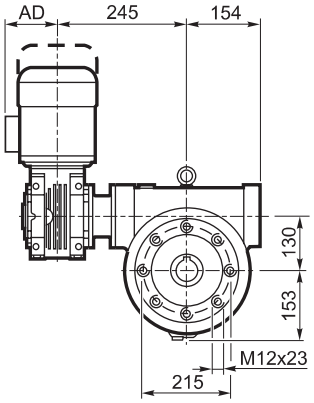

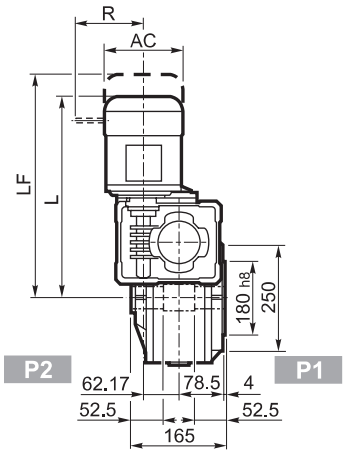

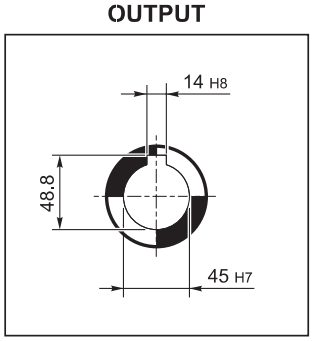

			M_				M...FD M...FA		M...FD		M...FA	
			AC	L	AD	Kg	LF	Kg	R	AD	R	AD
W/VF 63/130	**S1**	**M1**	138	419	108	63	480	65	103	135	124	108
W/VF 63/130	**S2**	**M2S**	156	447	119	68	523	71	129	146	134	119

Bonfiglioli Riduttori

W/VF 63/130...P (IEC)

A

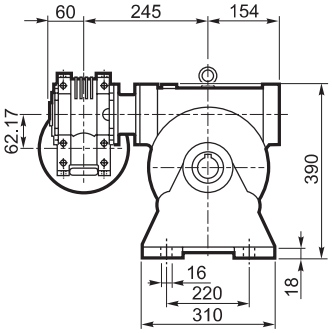

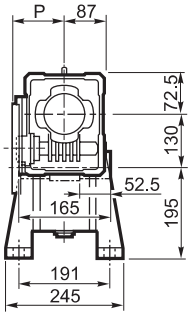

INPUT

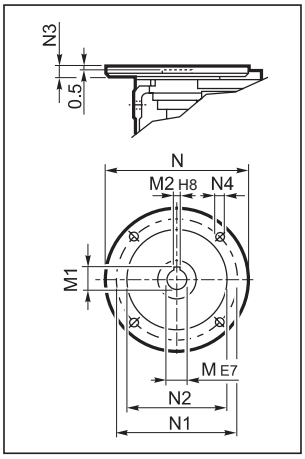

F_

FC_

FR_

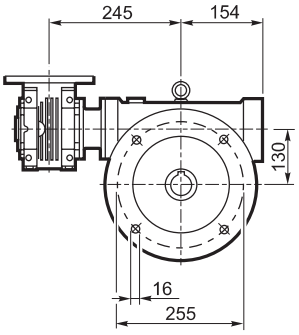

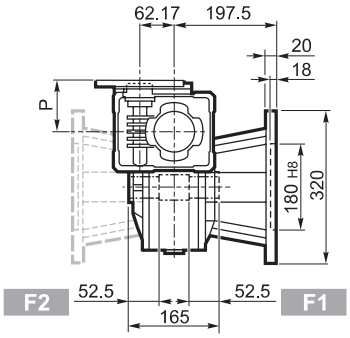

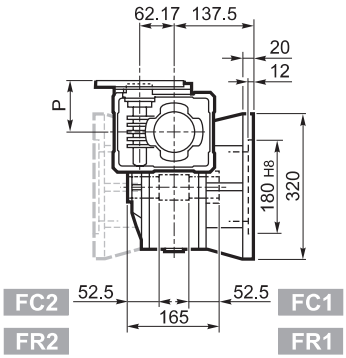

P_

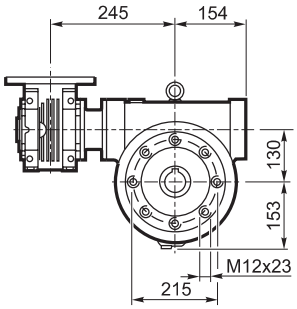

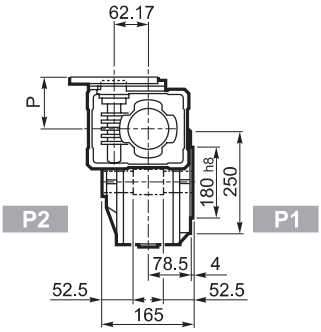

OUTPUT

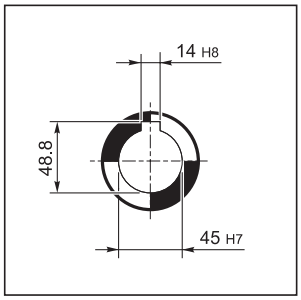

		M	M1	M2	N	N1	N2	N3	N4	P	Kg
W/VF 63/130	**P71 B5**	14	16.3	5	160	130	110	11	9	95	57
W/VF 63/130	**P80 B5**	19	21.8	6	200	165	130	12	11.5	102	
W/VF 63/130	**P90 B5**	24	27.3	8	200	165	130	12	11.5	102	
W/VF 63/130	**P71 B14**	14	16.3	5	105	85	70	11	6.5	95	
W/VF 63/130	**P80 B14**	19	21.8	6	120	100	80	11	6.5	102	
W/VF 63/130	**P90 B14**	24	27.3	8	140	115	95	11	8.5	102	

VF 150...P (IEC)

A

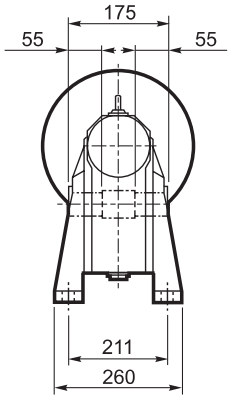

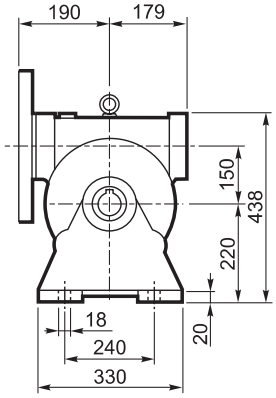

INPUT

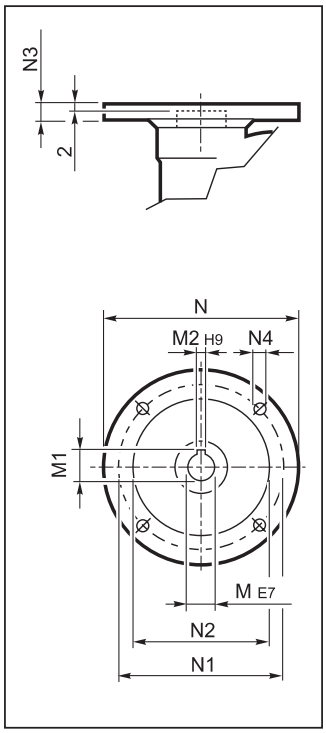

N

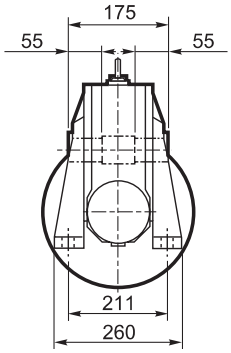

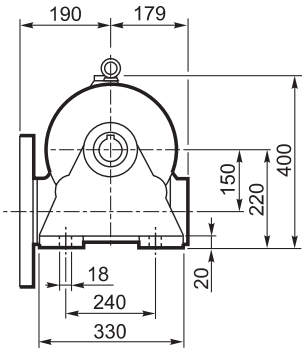

OUTPUT

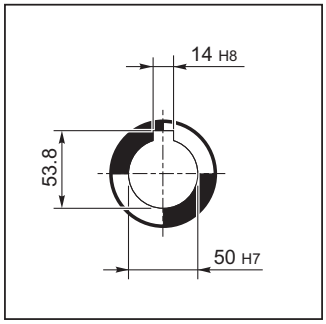

V

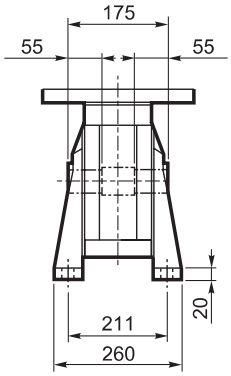

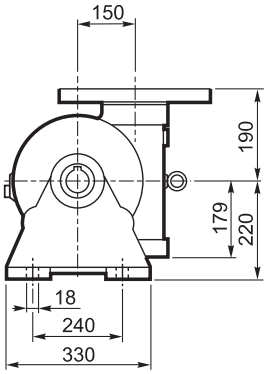

VF 150...P (IEC)

F_

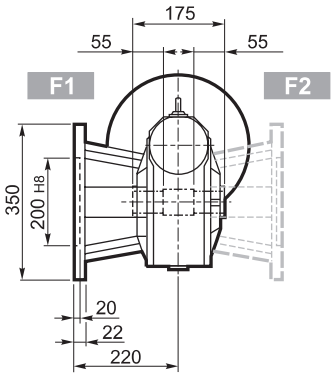

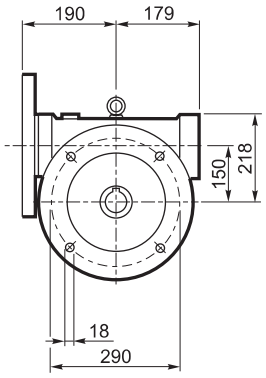

INPUT

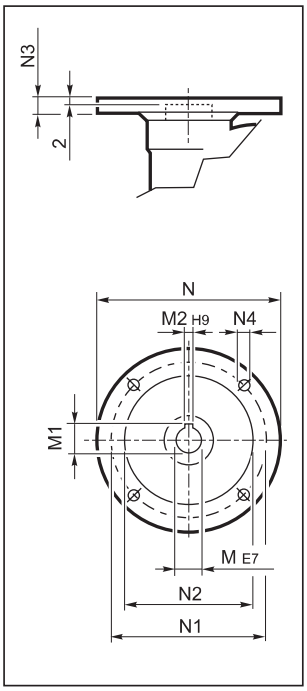

FC_

FR_

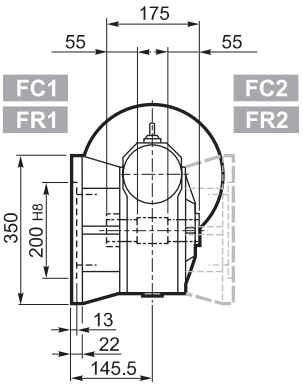

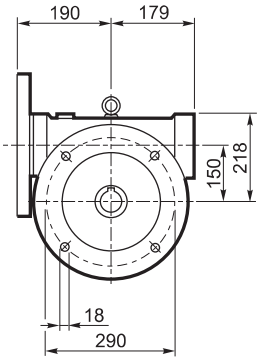

OUTPUT

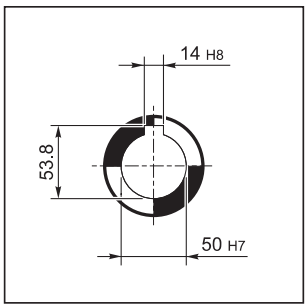

P_

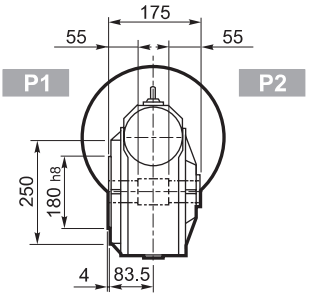

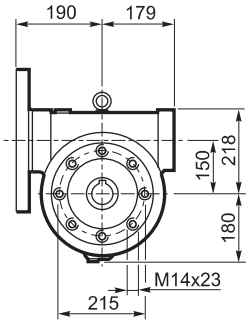

		M	M1	M2	N	N1	N2	N3	N4	Kg
VF 150	**P100 B5**	28	31.3	8	250	215	180	11	13	60
VF 150	**P112 B5**	28	31.3	8	250	215	180	11	13	
VF 150	**P132 B5**	38	41.3	10	300	265	230	16	13	
VF 150	**P160 B5**	42	44.6#	12	350	300	250	18	18	

Lowered key

VFR 150...P (IEC)

A

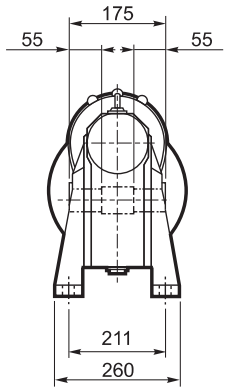

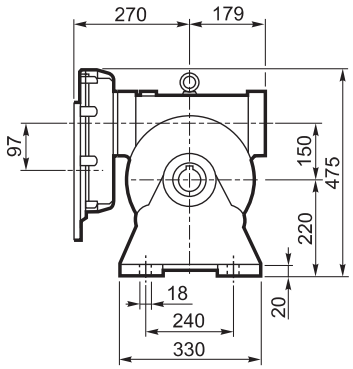

INPUT

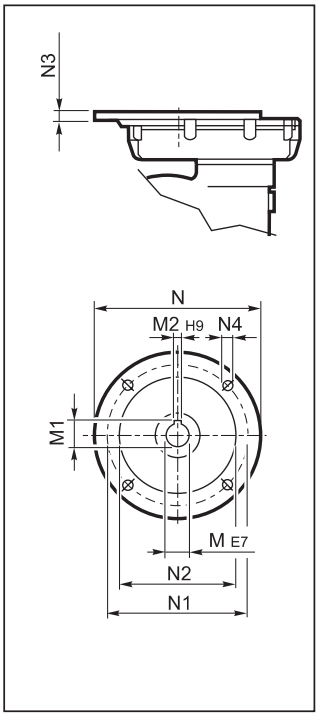

N

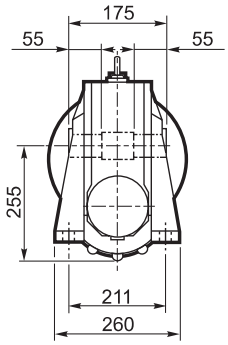

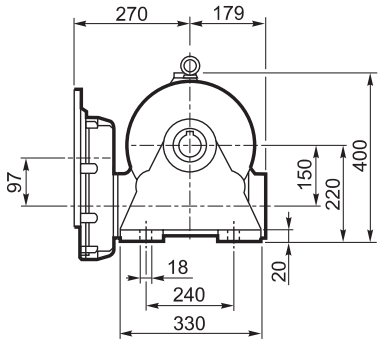

OUTPUT

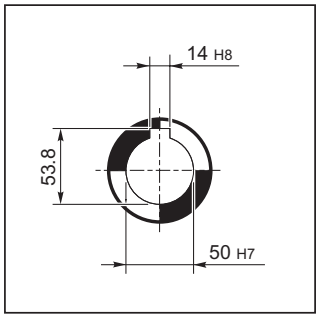

V

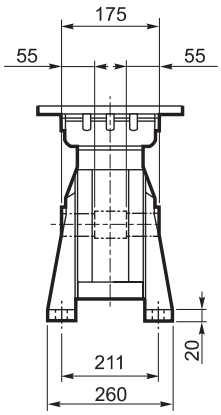

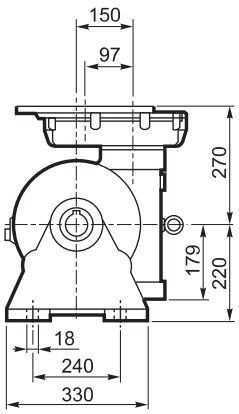

VFR 150...P (IEC)

F_

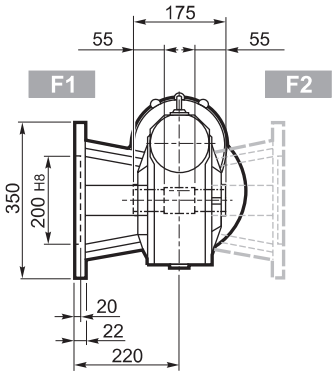

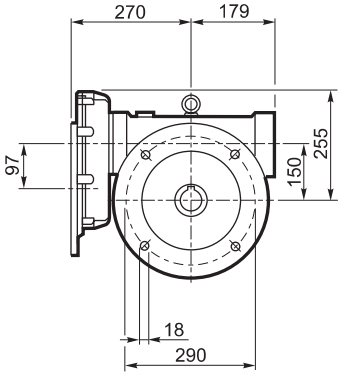

INPUT

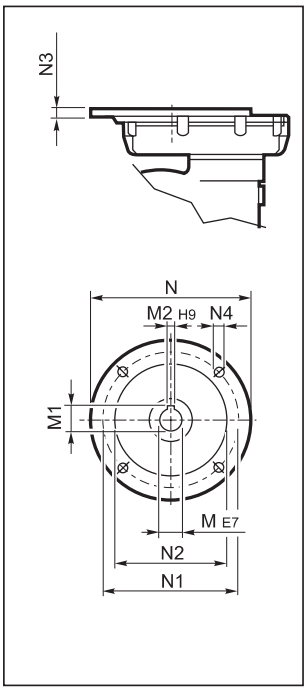

FC_

FR_

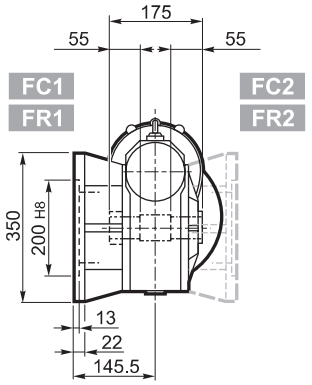

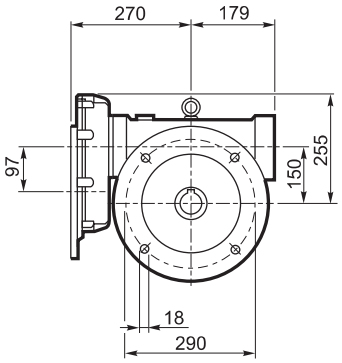

OUTPUT

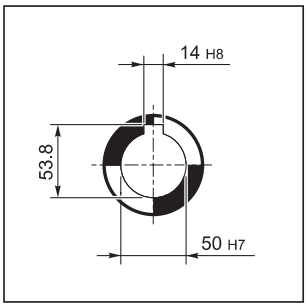

P_

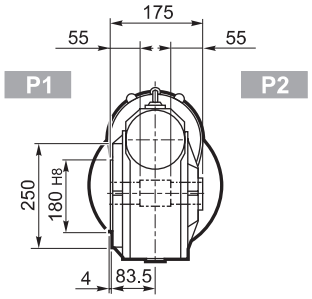

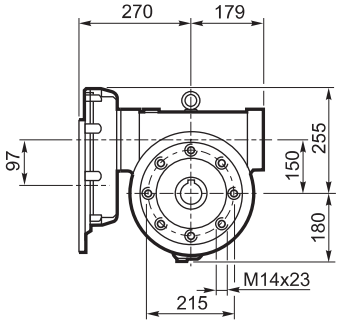

		M	M1	M2	N	N1	N2	N3	N4	Kg
VFR 150	**P90 B5**	24 K6	27.3	8	200	165	130	13	M10x25	71
VFR 150	**P100 B5**	28 K6	31.3	8	250	215	180	13	M12x35	
VFR 150	**P112 B5**	28 J6	31.3	8	250	215	180	13	M12x35	
VFR 150	**P132 B5**	38 J6	39.6#	10	300	265	230	13	M12x35	

Lowered key

W/VF 86/150...M

A

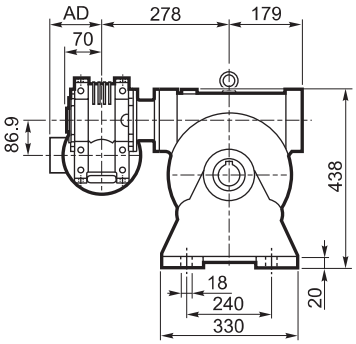

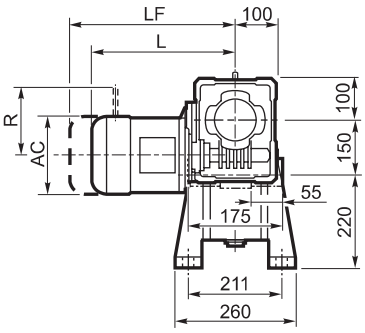

F_

FC_

FR_

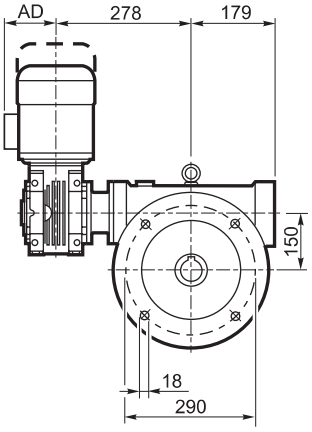

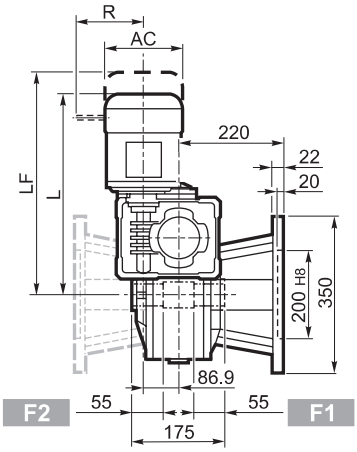

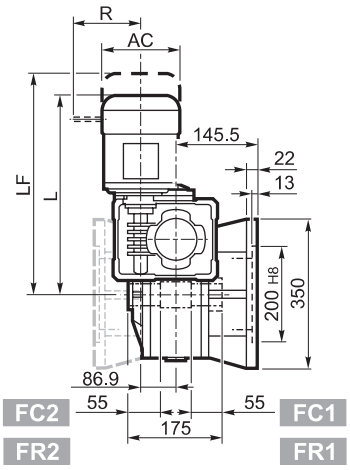

P_

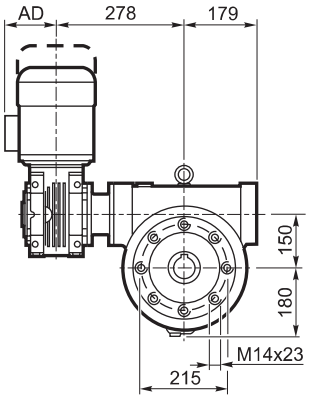

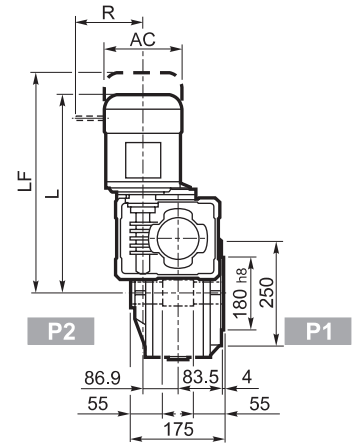

OUTPUT

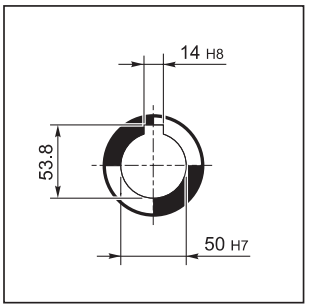

			M_				M...FD M...FA		M...FD		M...FA	
			AC	L	AD	Kg	LF	Kg	R	AD	R	AD
W/VF 86/150	**S1**	**M1**	138	474	108	82	385	84	103	135	124	108
W/VF 86/150	**S2**	**M2S**	156	499	119	86	425	89	129	146	134	119
W/VF 86/150	**S3**	**M3S**	193	542	142	91	488	97	160	158	160	142
W/VF 86/150	**S3**	**M3L**	193	574	142	99	515	104	160	158	160	142

Bonfiglioli Riduttori

W/VF 86/150...P (IEC)

A

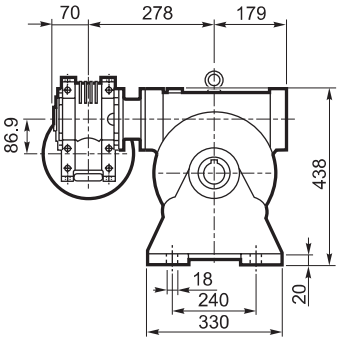

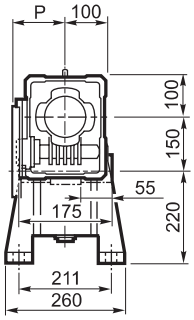

INPUT

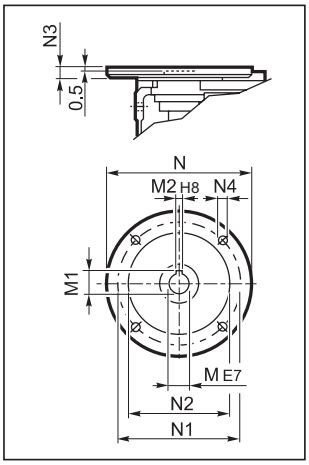

F_

FC_

FR_

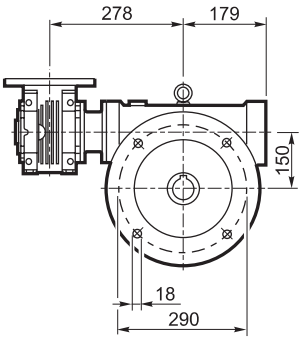

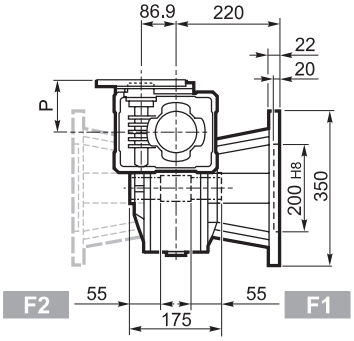

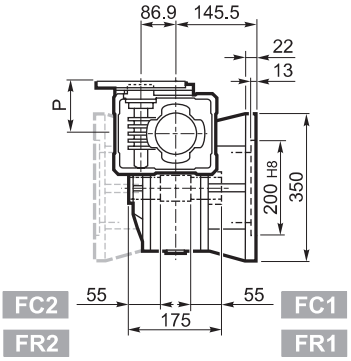

P_

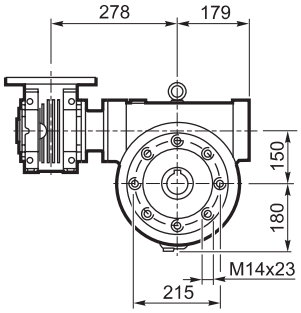

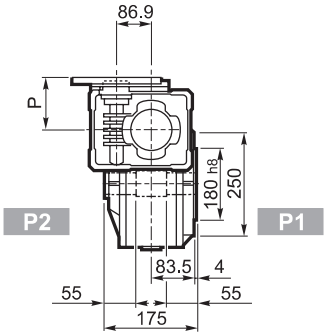

OUTPUT

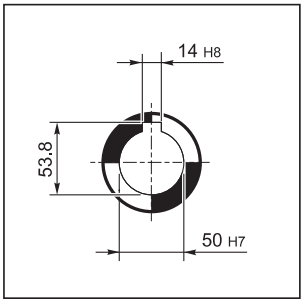

		M	M1	M2	N	N1	N2	N3	N4	P	Kg
W/VF 86/150	**P71 B5**	14	16.3	5	160	130	110	11	9	128	75
W/VF 86/150	**P80 B5**	19	21.8	6	200	165	130	12	11.5	128	
W/VF 86/150	**P90 B5**	24	27.3	8	200	165	130	12	11.5	128	
W/VF 86/150	**P100 B5**	28	31.3	8	250	215	180	13	12.5	136	
W/VF 86/150	**P112 B5**	28	31.3	8	250	215	180	13	12.5	136	
W/VF 86/150	**P80 B14**	19	21.8	6	120	100	80	7.5	6.5	128	
W/VF 86/150	**P90 B14**	24	27.3	8	140	115	95	7.5	8.5	128	
W/VF 86/150	**P100 B14**	28	31.3	8	160	130	110	10	8.5	136	
W/VF 86/150	**P112 B14**	28	31.3	8	160	130	110	10	8.5	136	

VF 185...P (IEC)

A

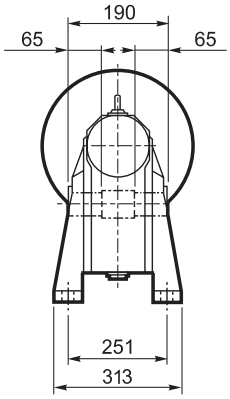

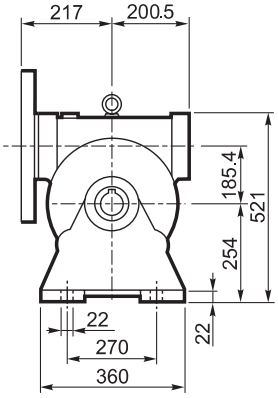

N

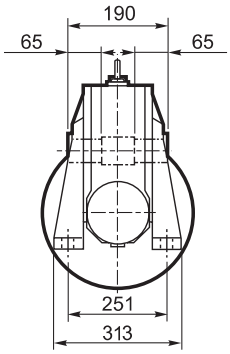

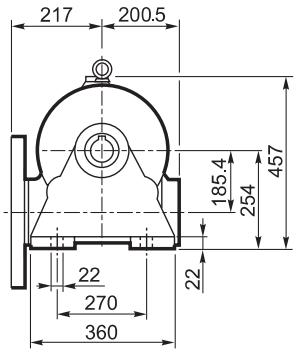

V

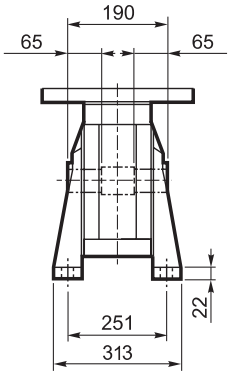

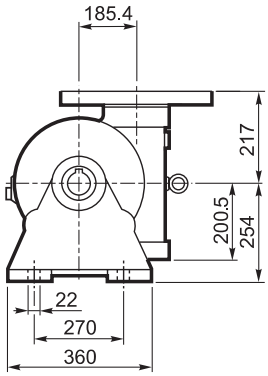

INPUT

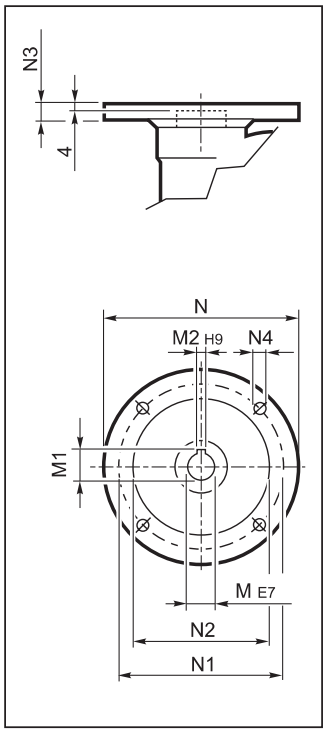

OUTPUT

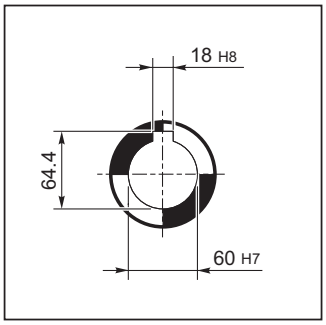

VF 185...P (IEC)

F_

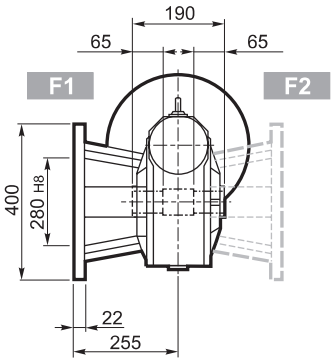

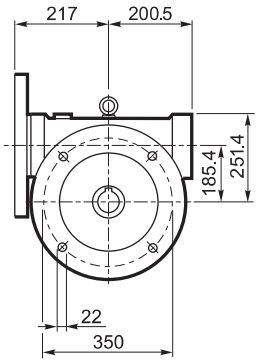

INPUT

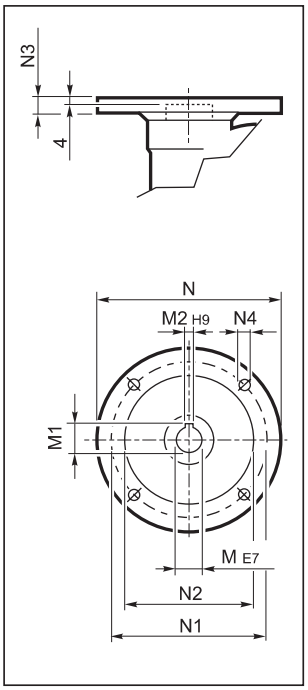

FC_

FR_

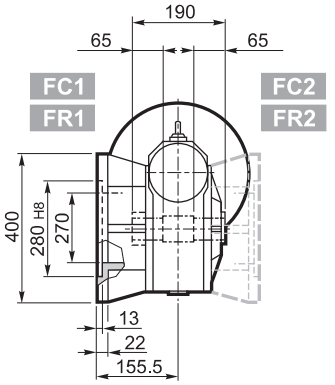

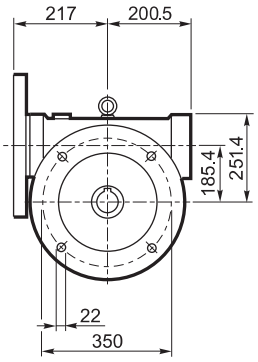

OUTPUT

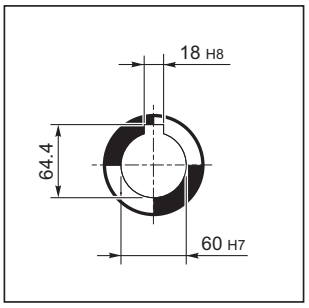

P_

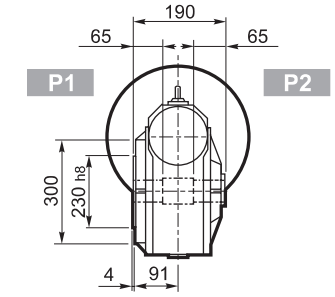

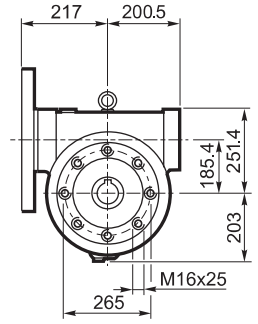

		M	M1	M2	N	N1	N2	N3	N4	Kg
VF 185	**P100 B5**	28	31.3	8	250	215	180	16	13	94
VF 185	**P112 B5**	28	31.3	8	250	215	180	16	13	
VF 185	**P132 B5**	38	41.3	10	300	265	230	16	13	
VF 185	**P160 B5**	42	45.3	12	350	300	250	18	18	
VF 185	**P180 B5**	48	51.2#	14	350	300	250	18	18	

Lowered key

VFR 185...P (IEC)

A

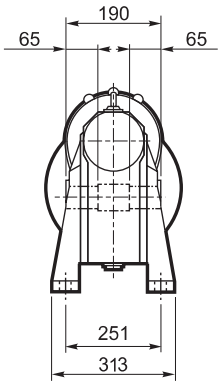

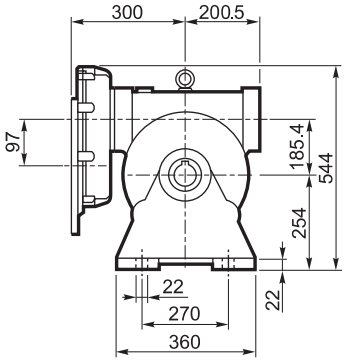

INPUT

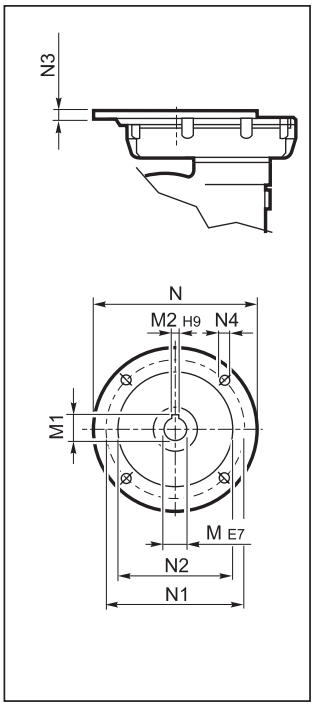

N

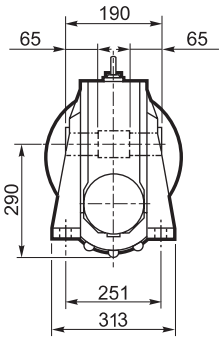

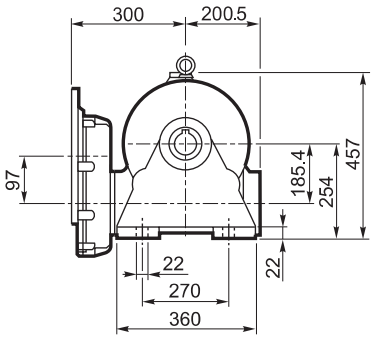

OUTPUT

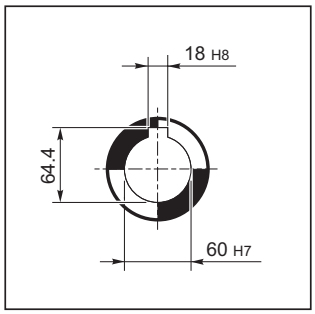

V

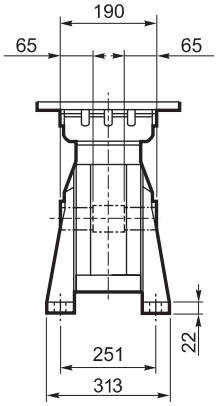

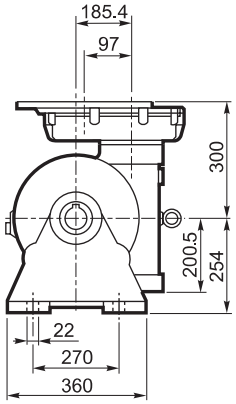

VFR 185...P (IEC)

F_

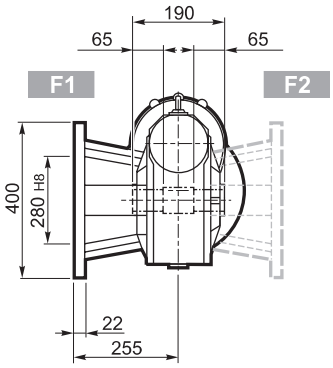

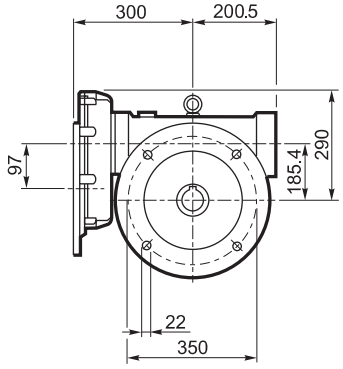

INPUT

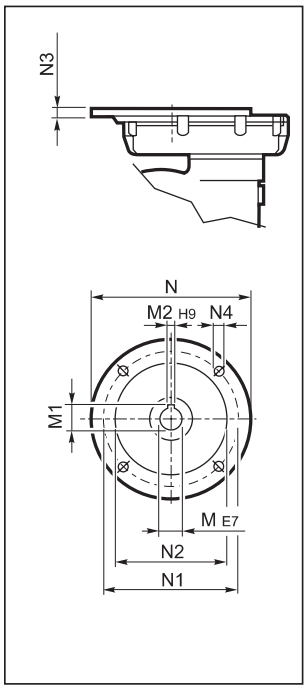

FC_

FR_

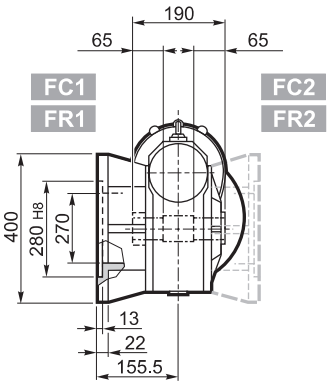

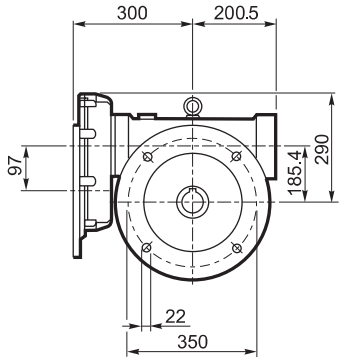

OUTPUT

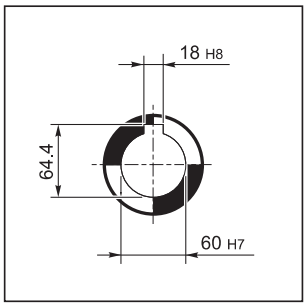

P_

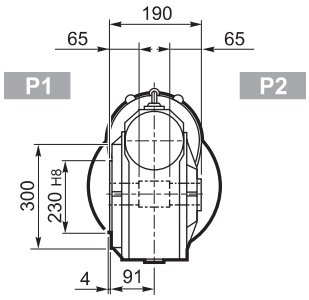

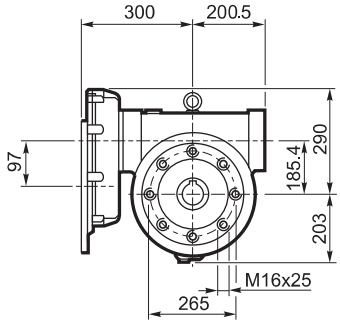

		M	M1	M2	N	N1	N2	N3	N4	Kg
VFR 185	**P90 B5**	24 K6	27.3	8	200	165	130	13	M10x25	110
VFR 185	**P100 B5**	28 K6	31.3	8	250	215	180	13	M12x35	
VFR 185	**P112 B5**	28 K6	31.3	8	250	215	180	13	M12x35	
VFR 185	**P132 B5**	38 J6	39.6#	10	300	265	230	13	M12x35	

Lowered key

W/VF 86/185...M

A

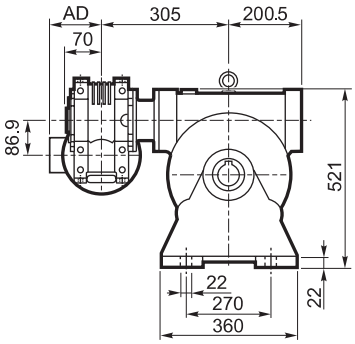

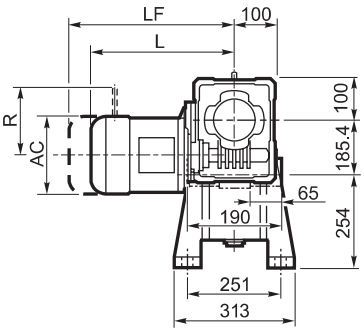

F_

FC_

FR_

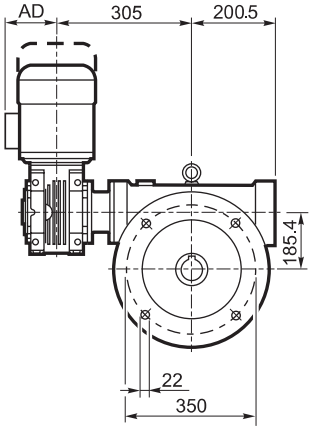

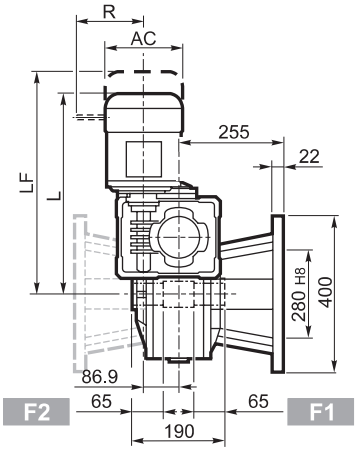

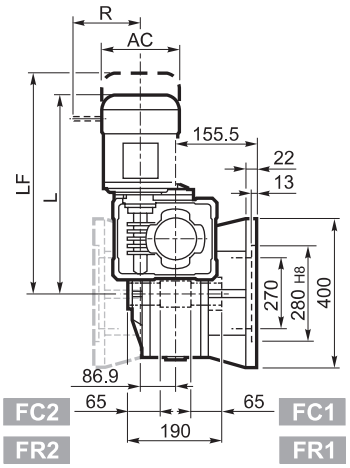

P_

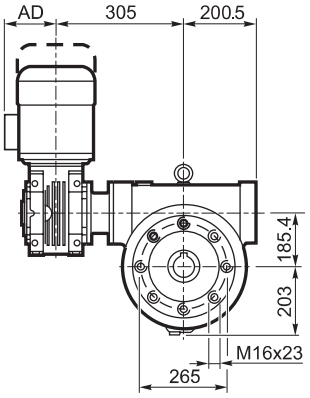

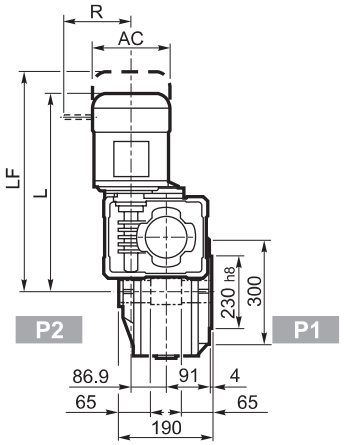

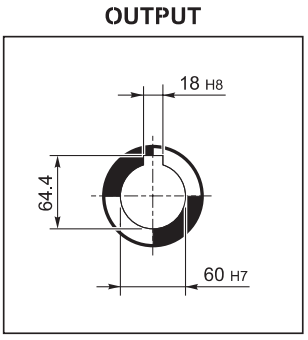

			M_				M...FD M...FA		M...FD		M...FA	
			AC	L	AD	Kg	LF	Kg	R	AD	R	AD
W/VF 86/185	**S1**	**M1**	138	509	108	116	570	118	103	135	124	108
W/VF 86/185	**S2**	**M2S**	156	534	119	120	610	123	129	146	134	119
W/VF 86/185	**S3**	**M3S**	193	577	142	125	673	131	160	158	160	142
W/VF 86/185	**S3**	**M3L**	193	609	142	133	700	138	160	158	160	142

Bonfiglioli Riduttori

W/VF 86/185...P (IEC)

A

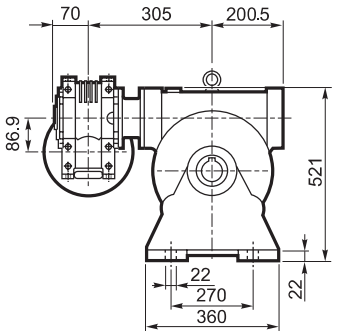

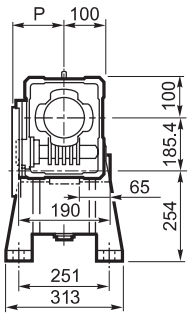

INPUT

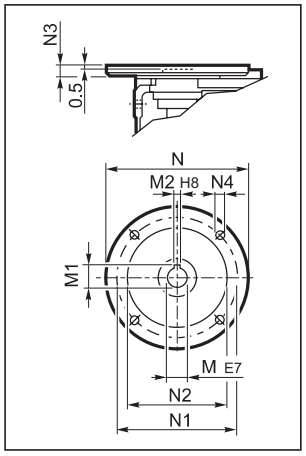

F_

FC_

FR_

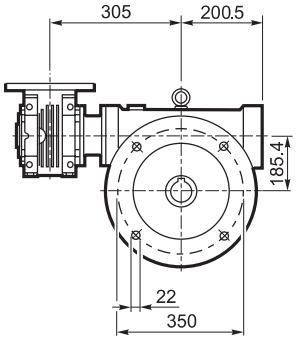

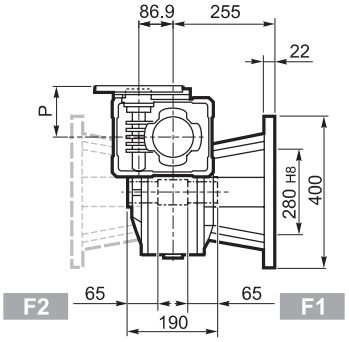

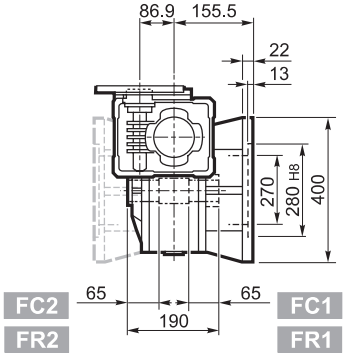

P_

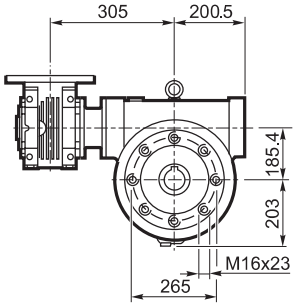

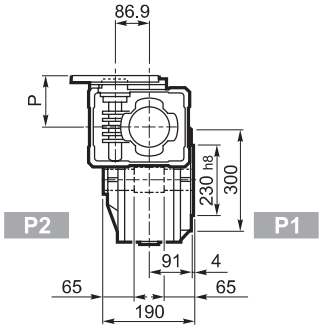

OUTPUT

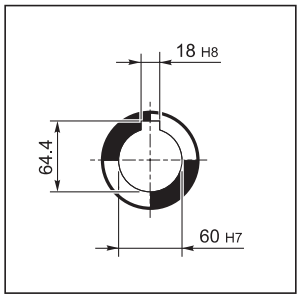

		M	M1	M2	N	N1	N2	N3	N4	P	Kg
W/VF 86/185	**P71 B5**	14	16.3	5	160	130	110	11	9	128	109
W/VF 86/185	**P80 B5**	19	21.8	6	200	165	130	12	11.5	128	
W/VF 86/185	**P90 B5**	24	27.3	8	200	165	130	12	11.5	128	
W/VF 86/185	**P100 B5**	28	31.3	8	250	215	180	13	12.5	136	
W/VF 86/185	**P112 B5**	28	31.3	8	250	215	180	13	12.5	136	
W/VF 86/185	**P80 B14**	19	21.8	6	120	100	80	7.5	6.5	128	
W/VF 86/185	**P90 B14**	24	27.3	8	140	115	95	7.5	8.5	128	
W/VF 86/185	**P100 B14**	28	31.3	8	160	130	110	10	8.5	136	
W/VF 86/185	**P112 B14**	28	31.3	8	160	130	110	10	8.5	136	

VF 210...P (IEC)

A

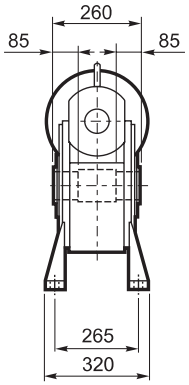

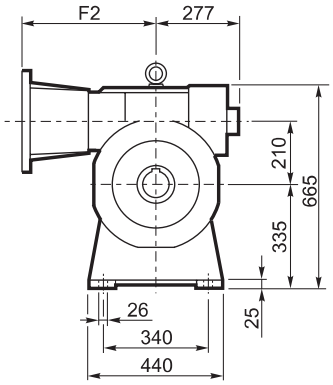

N

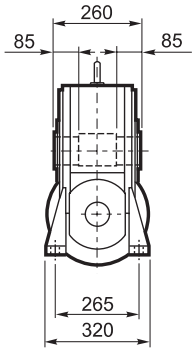

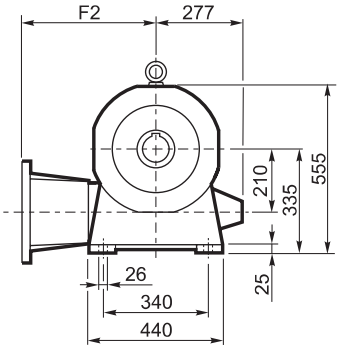

INPUT

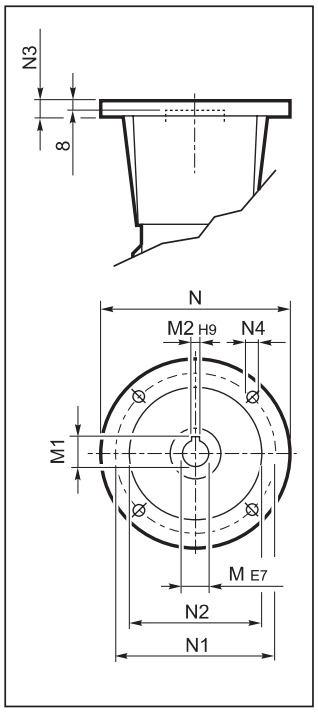

OUTPUT

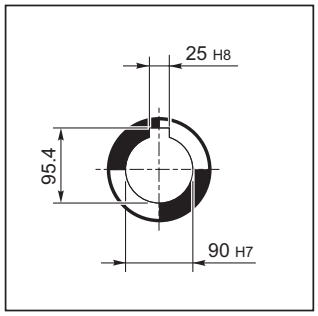

VF 210...P (IEC)

V

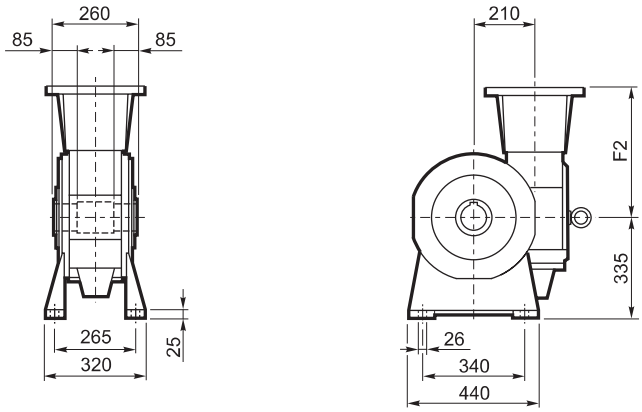

P

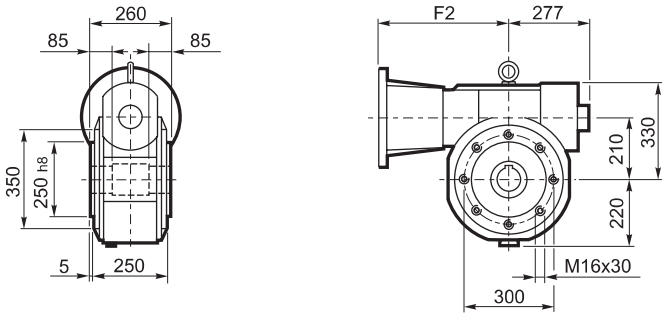

INPUT

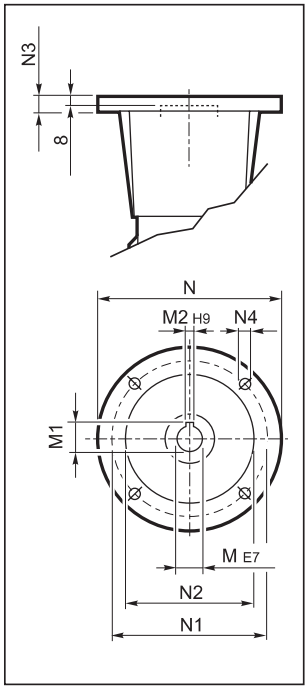

OUTPUT

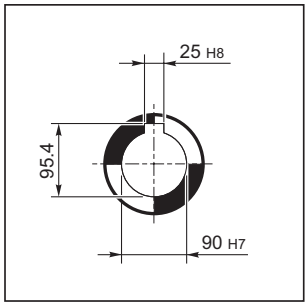

Fan cooling as standard on versions A and P.
P(IEC) arrangements come complete with gear coupling enclosed in the bell housing.

		F2	M	M1	M2	N	N1	N2	N3	N4	Kg
VF 210	**P132 B5**	485	38	41.3	10	300	265	230	25	M12	210
VF 210	**P160 B5**	460	42	45.3	12	350	300	250	22	18	
VF 210	**P180 B5**	460	48	51.8	14	350	300	250	22	18	
VF 210	**P200 B5**	485	55	59.3	16	400	350	300	25	M16	
VF 210	**P225 B5**	490	60	64.4	18	450	400	350	22	18 #	

N° 8 holes at 45°

VFR 210...P (IEC)

A

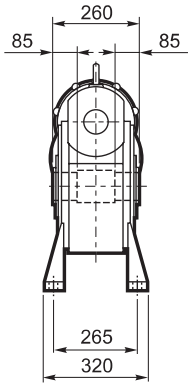

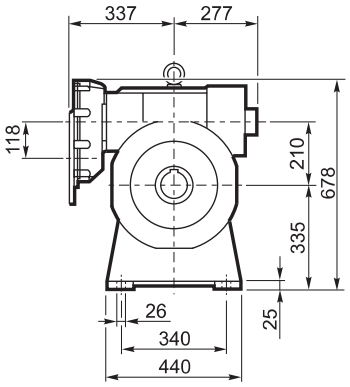

N

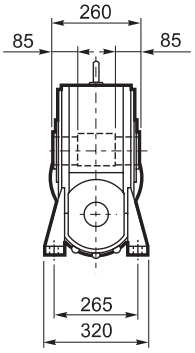

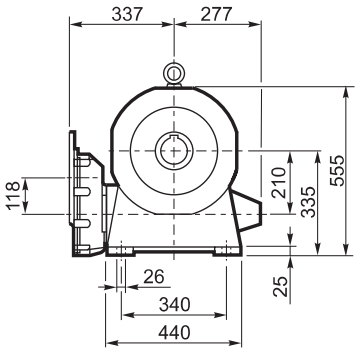

INPUT

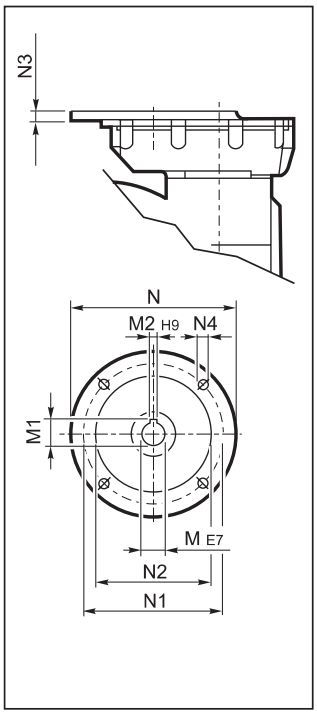

OUTPUT

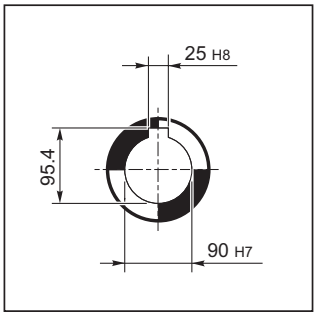

VFR 210...P (IEC)

V

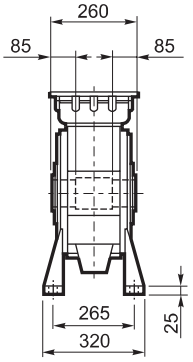

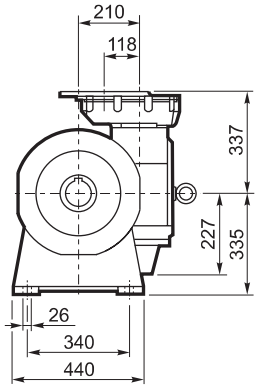

INPUT

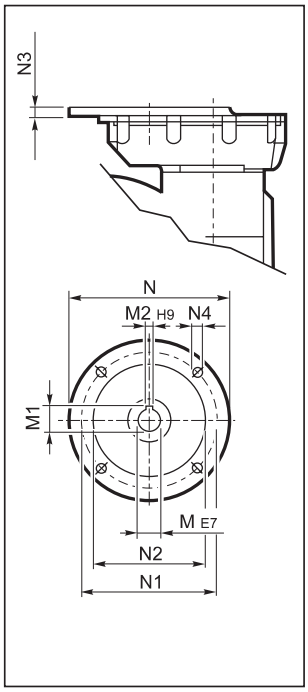

P

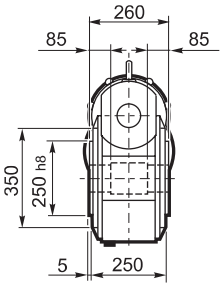

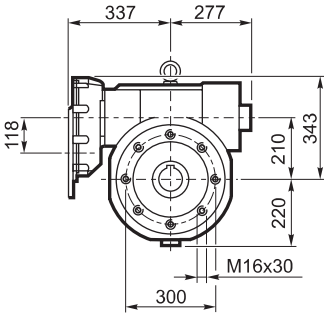

OUTPUT

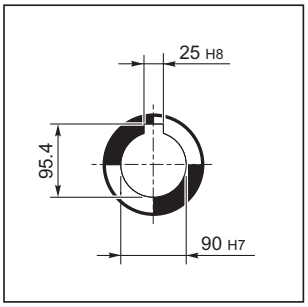

Fan cooling as standard on versions A and P.

		M	M1	M2	N	N1	N2	N3	N4	Kg
VFR 210	**P100 B5**	28 K6	31.3	8	250	215	180	13	M12x35	185
VFR 210	**P112 B5**	28 K6	31.3	8	250	215	180	13	M12x35	
VFR 210	**P132 B5**	38 J6	41.3	10	300	265	230	13	M12x35	
VFR 210	**P160 B5**	42 J6	44.3#	12	350	300	250	18	M16x60	

Lowered key

VF/VF 130/210...P (IEC)

A

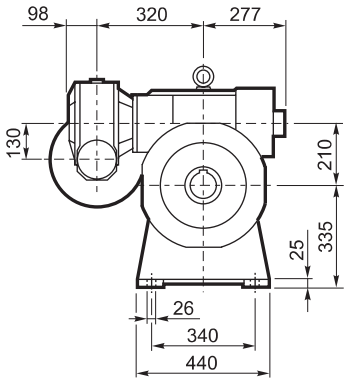

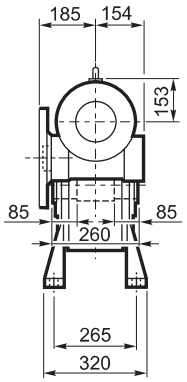

INPUT

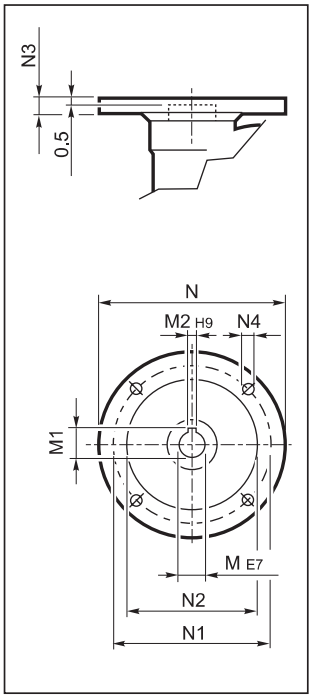

P

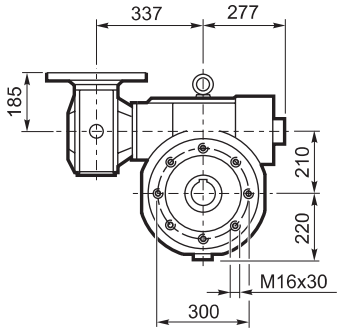

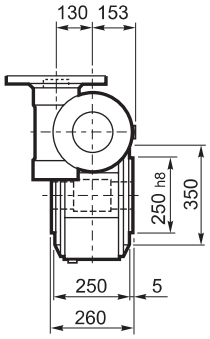

OUTPUT

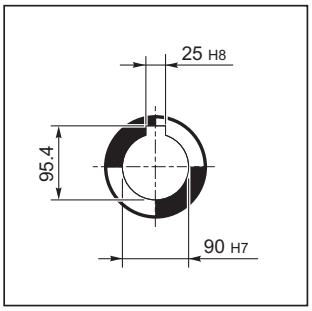

Fan cooling as standard on versions A and P.

		M	M1	M2	N	N1	N2	N3	N4	Kg
VF/VF 130/210	**P90 B5**	24	27.3	8	200	165	130	17	11	225
VF/VF 130/210	**P100 B5**	28	31.3	8	250	215	180	17	13	
VF/VF 130/210	**P112 B5**	28	31.3	8	250	215	180	17	13	
VF/VF 130/210	**P132 B5**	38	40.1#	10	300	265	230	17	13	

Lowered key

Bonfiglioli Riduttori

VF 250...P (IEC)

A

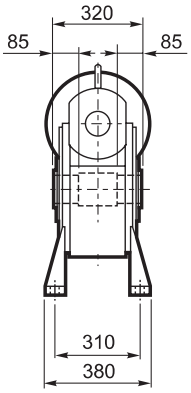

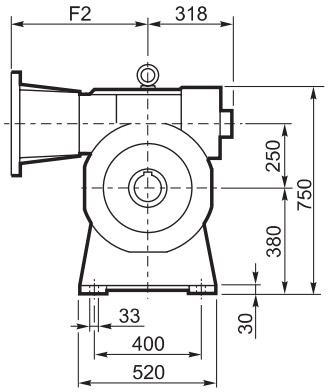

N

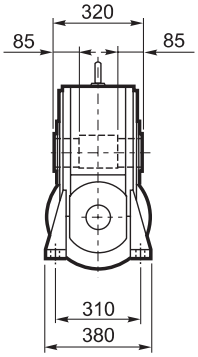

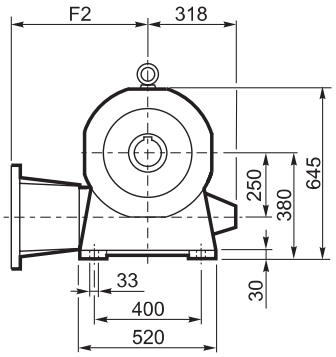

INPUT

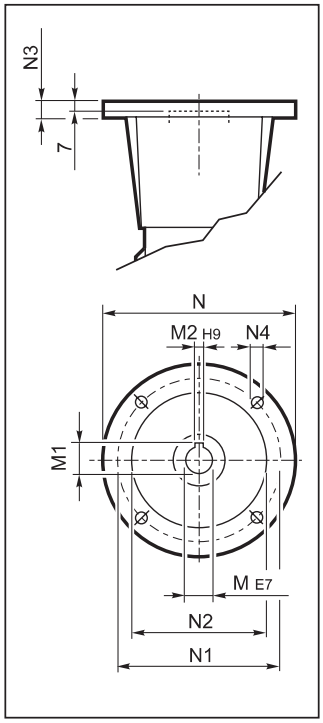

OUTPUT

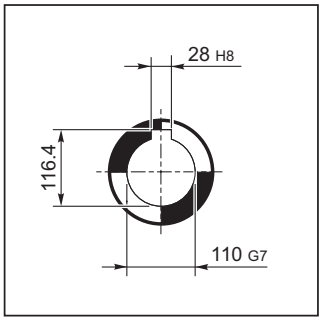

VF 250...P (IEC)

V

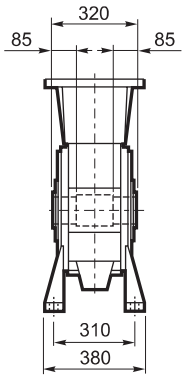

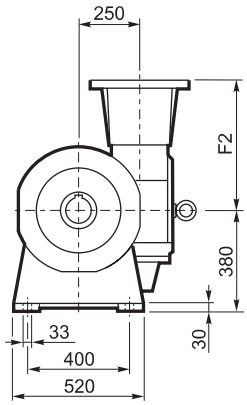

INPUT

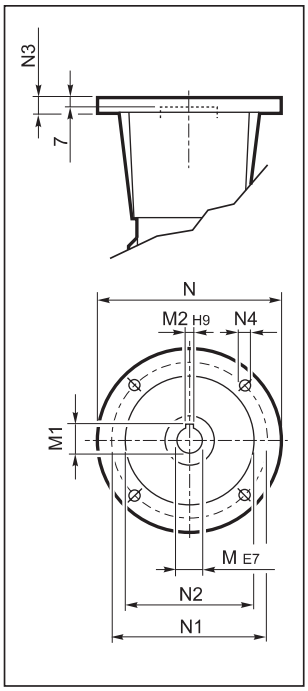

P

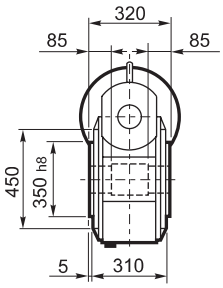

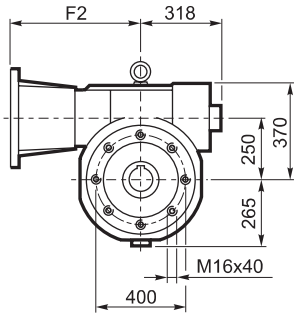

OUTPUT

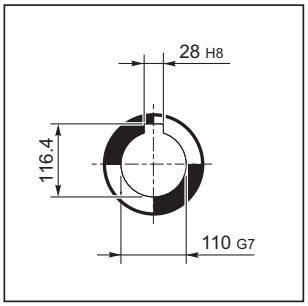

Fan cooling as standard on versions A and P.
P(IEC) arrangements come complete with gear coupling enclosed in the bell housing.

		F2	M	M1	M2	N	N1	N2	N3	N4	Kg
VF 250	**P132 B5**	531	38	41.3	10	300	265	230	25	M12	310
VF 250	**P160 B5**	506	42	45.3	12	350	300	250	22	18	
VF 250	**P180 B5**	506	48	51.8	14	350	300	250	22	18	
VF 250	**P200 B5**	531	55	59.3	16	400	350	300	25	M16	
VF 250	**P225 B5**	536	60	64.4	18	450	400	350	22	18#	

N° 8 holes at 45°

VFR 250...P (IEC)

A

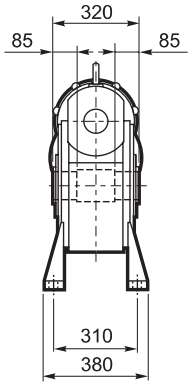

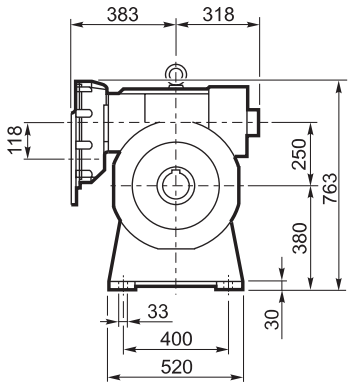

N

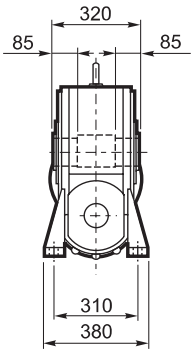

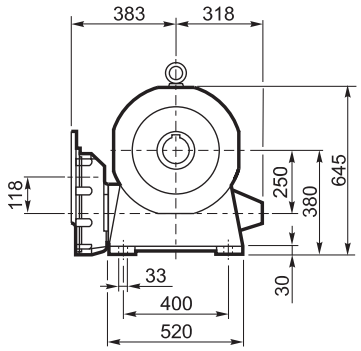

INPUT

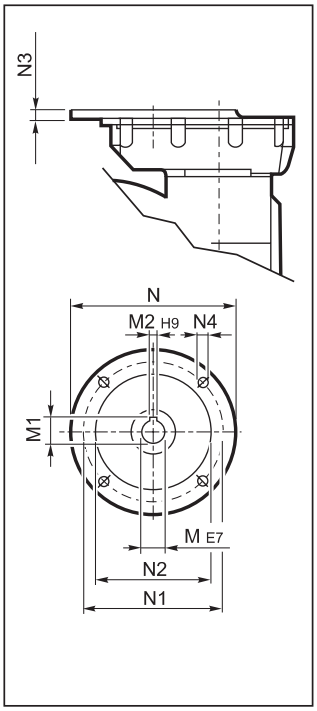

OUTPUT

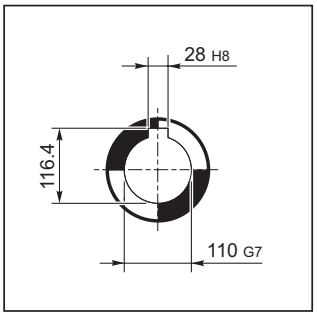

VFR 250...P (IEC)

V

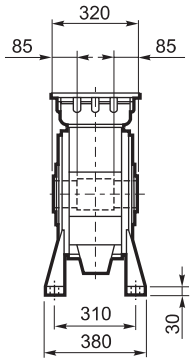

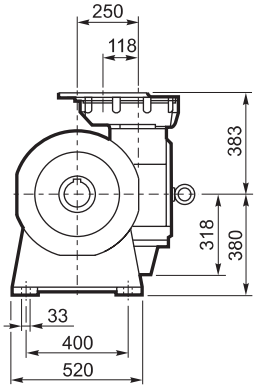

P

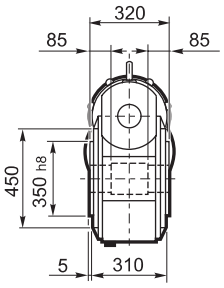

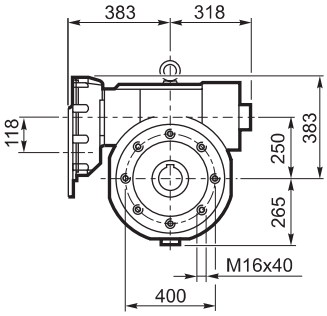

INPUT

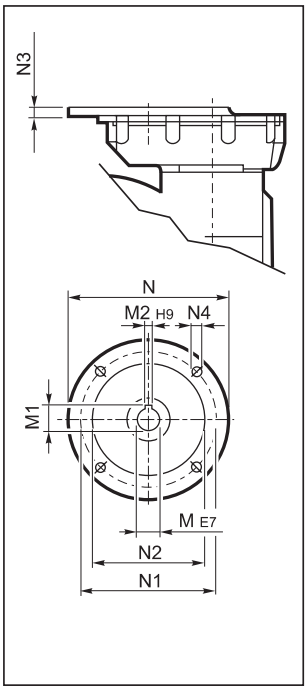

OUTPUT

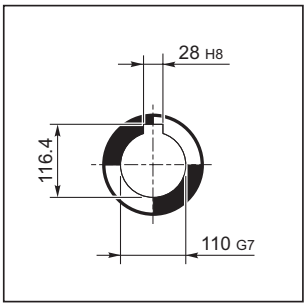

Fan cooling as standard on versions A and P.

		M	M1	M2	N	N1	N2	N3	N4	Kg
VFR 250	**P100 B5**	28 K6	31.3	8	250	215	180	13	M12x35	295
VFR 250	**P112 B5**	28 K6	31.3	8	250	215	180	13	M12x35	
VFR 250	**P132 B5**	38 J6	41.3	10	300	265	230	13	M12x35	
VFR 250	**P160 B5**	42 J6	44.3#	12	350	300	250	18	M16x60	

Lowered key

VF/VF 130/250...P (IEC)

A

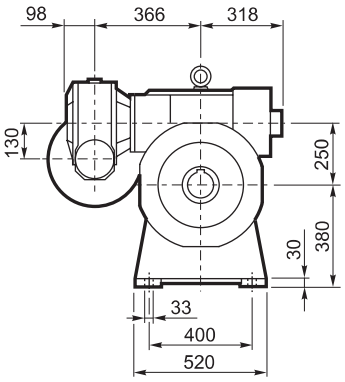

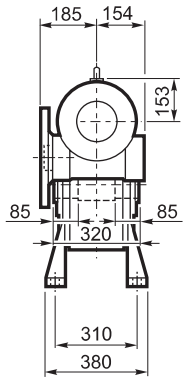

INPUT

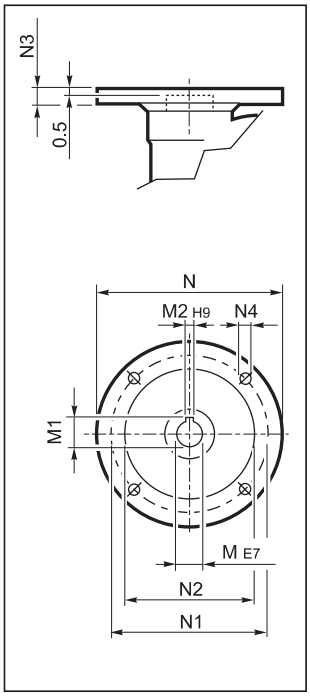

P

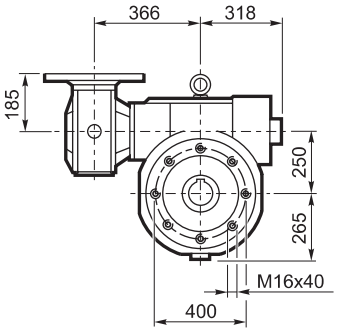

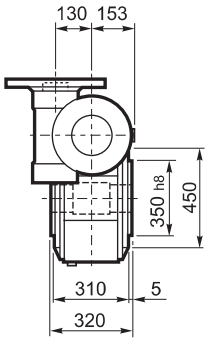

OUTPUT

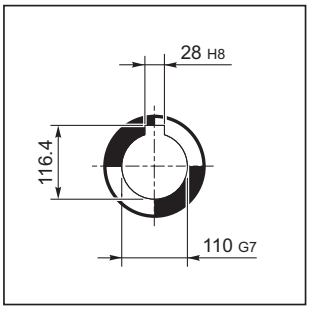

Fan cooling as standard on versions A and P.

		M	M1	M2	N	N1	N2	N3	N4	Kg
VF/VF 130/250	**P 90 B5**	24	27.3	8	200	165	130	17	11	325
VF/VF 130/250	**P100 B5**	28	31.3	8	250	215	180	17	13	
VF/VF 130/250	**P112 B5**	28	31.3	8	250	215	180	17	13	
VF/VF 130/250	**P132 B5**	38	40.1#	10	300	265	230	17	13	

Lowered key

VF 27...HS

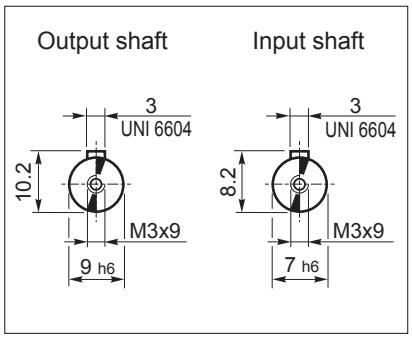

VF 27_A..HS

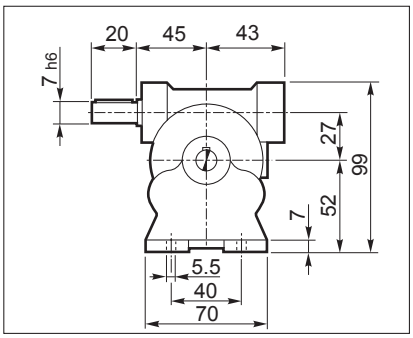

VF 27_N..HS

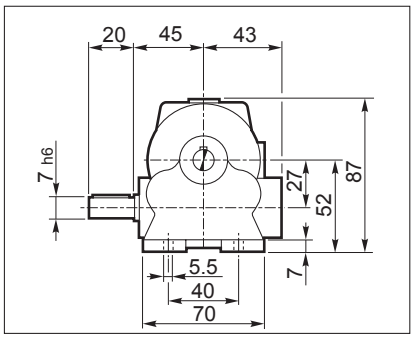

VF 27_V..HS

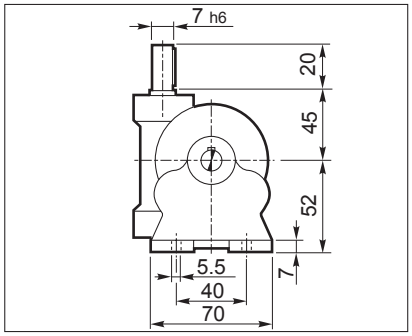

VF 27_F1..HS

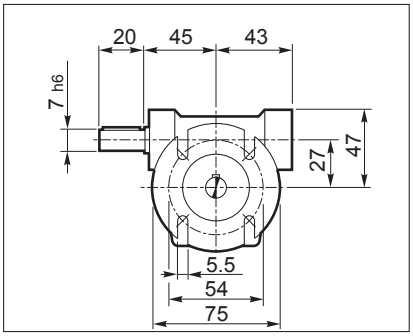

VF 27_F2..HS

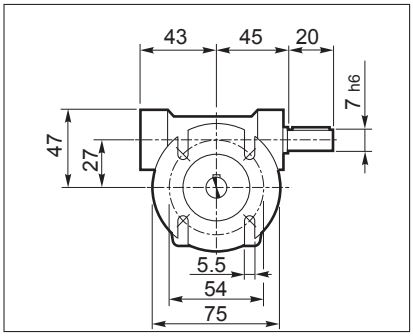

	Kg
VF 27_HS	0.73

Dimensions common to the other configurations can be found at page 111.

VF...HS - W..HS

VF_A..HS

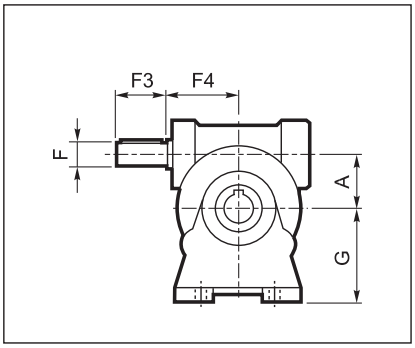

VF_V..HS

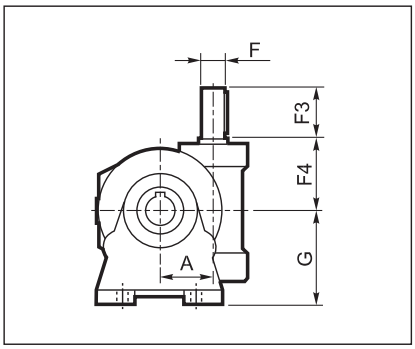

VF_N..HS

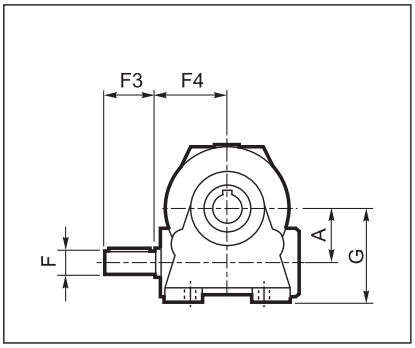

VF_P..HS

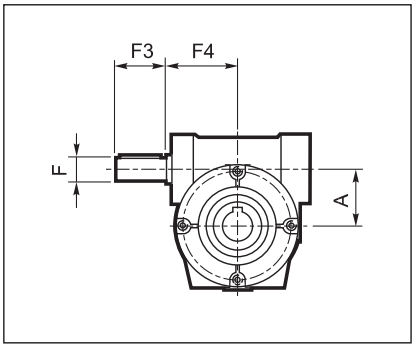

VF_FA/FC/FR/F..HS

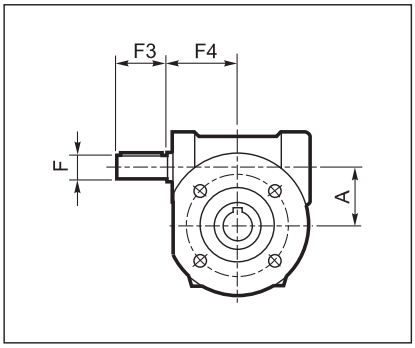

VF_U..HS

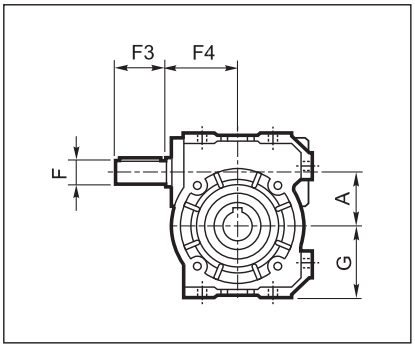

W_U..HS

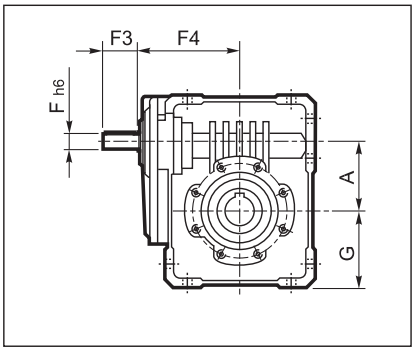

W_UF/UFC/UFCR..HS

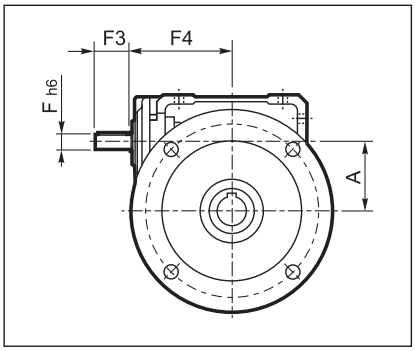

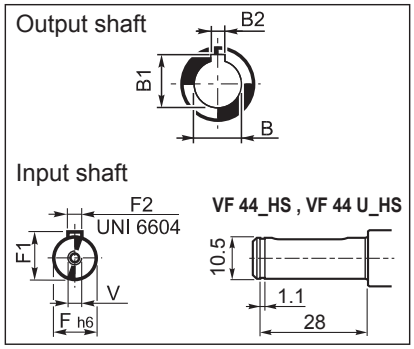

	A	B	B1	B2	F	F1	F2	F3	F4	G	V	Kg
VF 30_HS	30	14 H7	16.3	5	9	10.2	3	20	50	55	—	1.1
VF 30 U HS										47		
VF 44_HS	44.6	18 H7	20.8	6	11	12.5	4	30	54	72	—	2.0
VF 44 U HS										55		
VF 49_HS	49.5	25 H7	28.3	8	16	18	5	40	65	82	M6x16	3.0
VF 49 U HS										64.5		
W 63_HS	62.17	25 H7	28.3	8	18	20.5	6	40	110.5	72.5	M6x16	6.4
W 75_HS	75	30(28) H7	33.3(31.3)	8	19	21.5	6	40	128	87	M6x16	10.0
W 86_HS	86.9	35 H7	38.3	10	25	28	8	50	144	100	M8x19	14.1
W 110_HS	110.1	42 H7	45.3	12	25	28	8	60	168	125	M8x19	27
VF 130_HS	130	45 H7	48.8	14	30	33	8	60	160	195	M8x20	49
VF 150_HS	150	50 H7	53.8	14	35	38	10	65	185	220	M8x20	60
VF 185_HS	185.4	60 H7	64.4	18	40	43	12	70	214.5	254	M8x20	94
VF 210_HS	210	90 H7	95.4	25	48	51.5	14	110	230	335	M16x40	175
VF 250_HS	250	110 G7	116.4	28	55	59	16	110	274	380	M16x40	275

Dimensions common to the other configurations can be found from page 112 to 167.

VFR...HS - WR...HS

VFR_A..HS

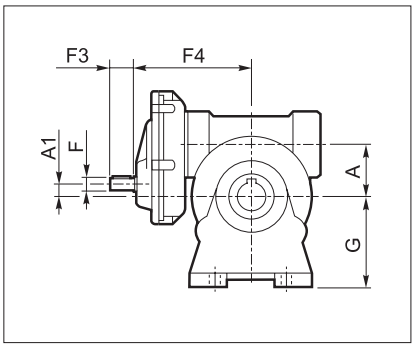

VFR_N..HS

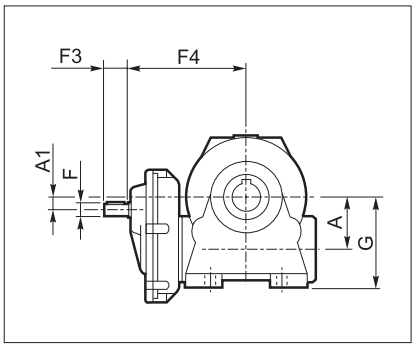

VFR_V..HS

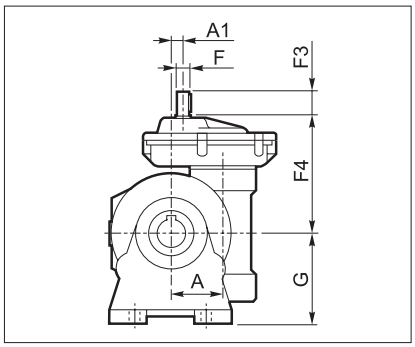

VFR_P..HS

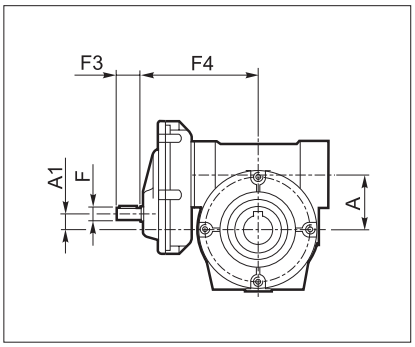

VFR_FA/FC/FR/F..HS

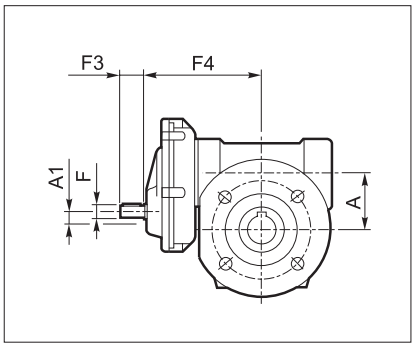

VFR_U..HS

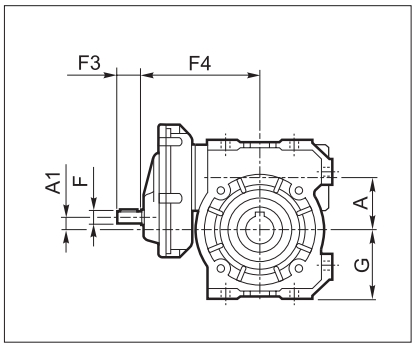

WR_U..HS

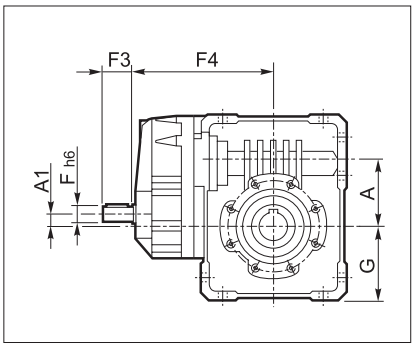

WR_UF/UFC/UFCR..HS

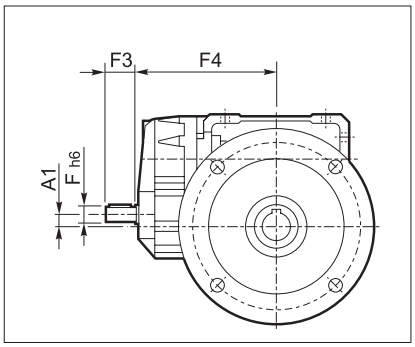

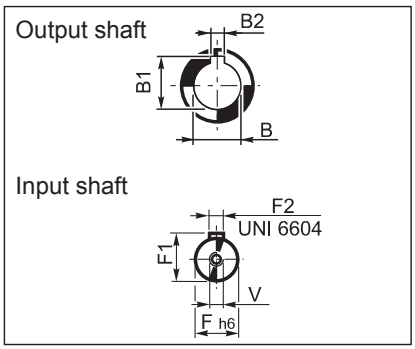

	A	A1	B	B1	B2	F	F1	F2	F3	F4	G	V	Kg
VFR 49_HS	49.5	10	25 H7	28.3	8	11	12.5	4	23	110	82	M4x10	5
VFR 49 U HS											64.5		
WR 63_HS	62.17	11.42	25 H7	28.3	8	14	16	5	30	138	72.5	M5x12.5	7.1
WR 75_HS	75	11	30(28) H7	33.3(31.3)	8	19	21.5	6	40	162	87	M6x16	11.1
WR 86_HS	86.9	22.9	35 H7	38.3	10	19	21.5	6	40	178	100	M6x16	14.7
WR 110_HS	110.1	21.1	42 H7	45.3	12	24	27	8	50	201	125	M8x19	34
VFR 130_HS	130	45	45 H7	48.8	14	24	27	8	50	228	195	M8x20	57
VFR 150_HS	150	53	50 H7	53.8	14	28	31	8	60	280	220	M8x20	71
VFR 185_HS	185.4	88.4	60 H7	64.4	18	28	31	8	60	310	254	M8x20	110
VFR 210_HS	210	92	90 H7	95.4	25	38	41	10	80	335	335	M10x25	185
VFR 250_HS	250	132	110 G7	116.4	28	38	41	10	80	383	380	M10x25	295

Dimensions common to the other configurations can be found from page 116 to 169.

VF/VF...HS - VF/W...HS - W/VF...HS

VF/VF_A..HS
W/VF_A..HS

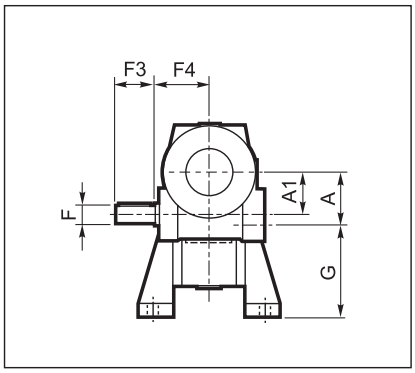

VF/VF_P..HS
W/VF_P..HS

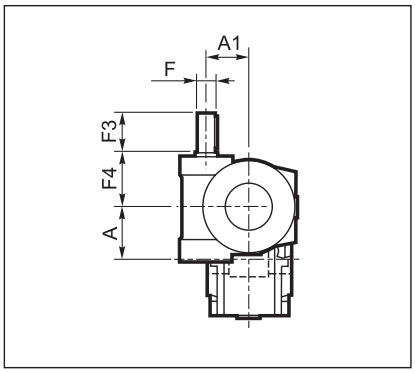

VF/VF_P..HS
W/VF_P..HS

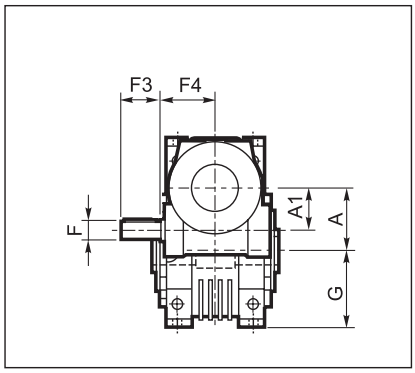

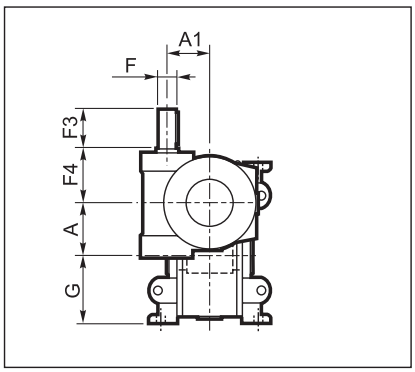

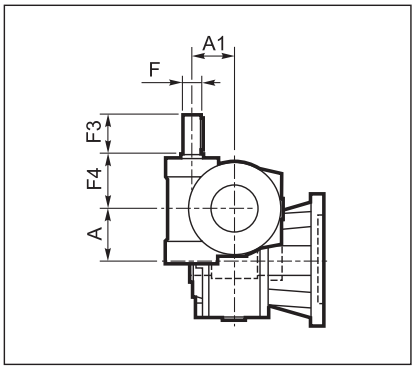

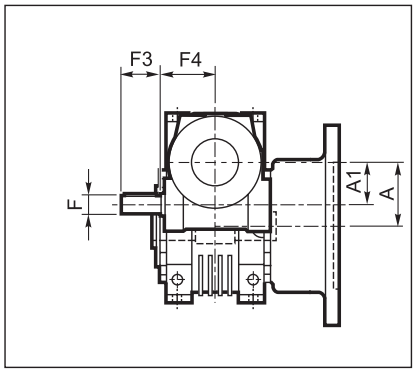

Output shaft

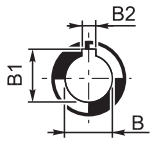

Input shaft

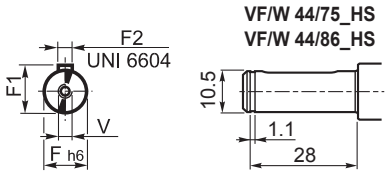

	A	A1	B	B1	B2	F	F1	F2	F3	F4	G	V	Kg
VF/VF 30/44_HS	44.6	30	18 H7	20.8	6	9	10.2	3	20	50	72	—	3.5
VF/VF 30/44 U HS											55		
VF/VF 30/49_HS	49.5	30	25 H7	28.3	8	9	10.2	3	20	50	82	—	4.5
VF/VF 30/49 U HS											64.5		
VF/W 30/63_HS	62.17	30	25 H7	28.3	8	9	10.2	3	20	50	100	—	7.5
VF/W 44/75_HS	75	44.6	30 (28) H7	33.3 (31.3)	8	11	12.5	4	30	54	115	—	16.1
VF/W 44/86_HS	86.9	44.6	35 H7	38.3	10	11	12.5	4	30	54	142	—	42
VF/W 49/110_HS	110.0	49.5	42 H7	45.3	12	16	18	5	40	65	170	M6x16	46
W/VF 63/130_HS	130	62.17	45 H7	48.8	14	18	20.5	6	40	110.5	72.5	M6x16	74
W/VF 86/150_HS	150	86.9	50 H7	53.8	14	25	28	8	50	144	100	M8x19	108
W/VF 86/185_HS	185.4	86.9	60 H7	64.4	18	25	28	8	50	144	100	M8x19	109
VF/VF 130/210_HS	210	130	90 H7	95.4	25	30	33	8	60	160	335	M8	225
VF/VF 130/250_HS	250	130	110 G7	116.4	28	30	33	8	60	160	380	M8	325

Dimensions common to the other configurations can be found from page 118 to 170.

28 ACCESSORIES

28.1 Plug-in output shaft

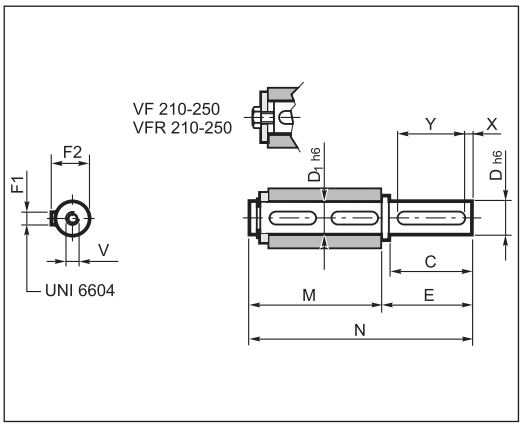

		C	D	D1	E	F1	F2	M	N	V	X	Y
VF	**30**	30	14	14	35	5	16	61	96	M5x13	5	20
VFR	**44**	40	18	18	45	6	20.5	70	115	M6x16	5	30
VF/VF	**49**	60	25	25	65	8	28	89	154	M8x19	5	50
	63	60	25	25	65	8	28	127	192	M8x19	5	50
W	**75_D28**	60	28	30	65	8	31	134	199	M8x20	5	50
WR	**75_D30**	60	30	30	65	8	33	134	199	M10x22	5	50
VF/W	**86**	60	35	35	65	10	38	149	214	M10x22	5	50
	110	75	42	42	80	12	45	164	244	M12x28	7.5	60
	130	80	45	45	85	14	48.5	176	261	M12x32	5	70
VF	**150**	85	50	50	93	14	53.5	185	278	M16x40	7.5	70
VFR	**185**	100	60	60	110	18	64	200	310	M16x40	10	80
W/VF	**210**	130	90	90	140	25	95	255	395	M20x50	5	120
	250	165	110	110	175	28	116	315	490	M24x64	15	140

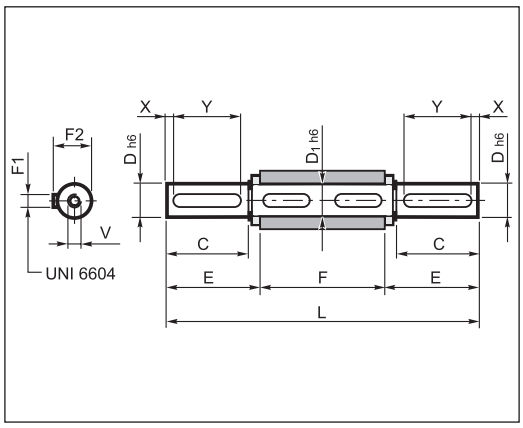

		C	D	D1	E	F	F1	F2	L	V	X	Y
VF	**30**	30	14	14	32.5	55	5	16	120	M5x13	5	20
VFR	**44**	40	18	18	42.7	64	6	20.5	149.4	M6x16	5	30
VF/VF	**49**	60	25	25	63.2	82	8	28	208.4	M8x19	5	50
	63	60	25	25	63.2	120	8	28	246.4	M8x19	5	50
W	**75_D28**	60	28	30	64	127	8	31	255	M8x20	5	50
WR	**75_D30**	60	30	30	64	127	8	33	255	M10x22	5	50
VF/W	**86**	60	35	35	64	140	10	38	268	M10x22	5	50
	110	75	42	42	79.3	155	12	45	313.5	M12x28	7.5	60
	130	80	45	45	84.7	165	14	48.5	334.5	M12x32	5	70
VF	**150**	85	50	50	90	175	14	53.5	355	M16x40	7.5	70
VFR	**185**	100	60	60	105	190	18	64	400	M16x40	10	80
W/VF	**210**	130	90	90	140	260	25	95	540	M20x50	5	120
	250	165	110	110	175	320	28	116	670	M24x64	15	140

28.2 Torque arm

VF

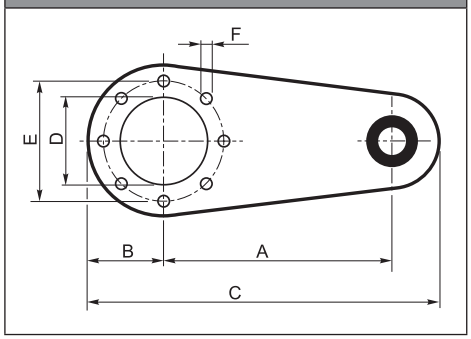

W

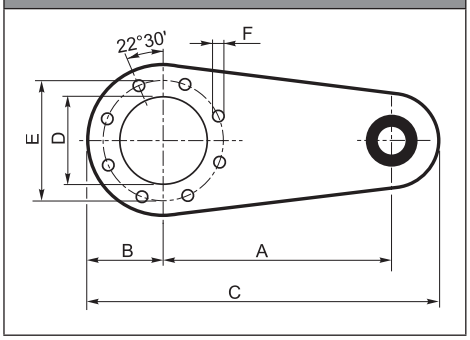

VF 30 - VF 44 - VF 49

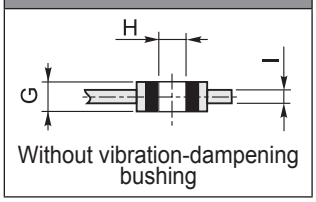

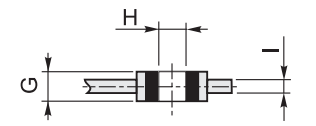

		A	B	C	D	E	F	G	H	I
VF	**30**	100	40	157.5	50	65	7	14	8	4
VFR	**44**	100	40	157.5	50	65	7	14	8	4
VF/VF	**49**	100	55	172.5	68	94	7	14	8	4
	63	150	55	233	75	90	9	20	10	6
W	**75**	200	63	300	90	110	9	25	20	6
WR	**86**	200	80	318	110	130	11	25	20	6
VF/W	**110**	250	100	388	130	165	13	25	20	6
	130	300	125	470	180	215	13	30	25	6
VF	**150**	300	125	470	180	215	15	30	25	6
VFR	**185**	350	150	545	230	265	17	30	25	6
W/VF	**210**	350	175	625	250	300	19	60	50	8
	250	400	225	725	350	400	19	60	50	10

28.3 VF-interchangeable foot kits KA, KV

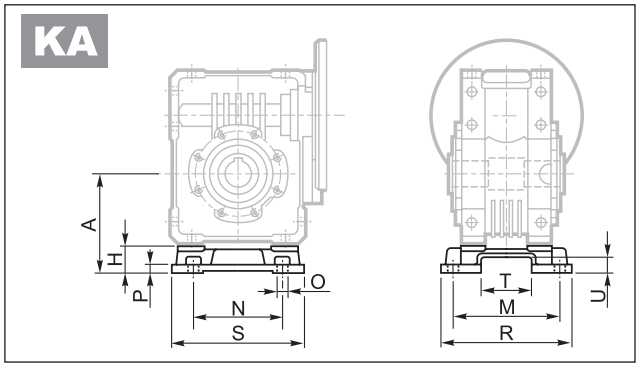

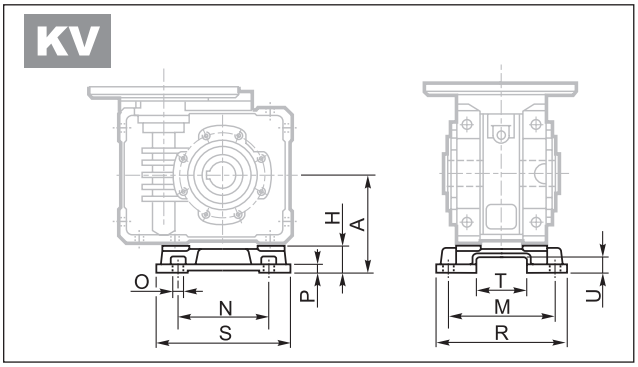

	A	H	M	N	O	P	R	S	T	U
W 63 - WR 63	100	27.5	111	95	11	8	135	145	56.5	15.5
W 75 - WR 75	115	28	115	120	11	9	139	174	56.5	15.5
W 86 - WR 86	142	42	146	140	11	11	170	200	69	20
W 110 - WR 110	170	45	181	200	13	14	210	250	69	20

28.4 Safety cover

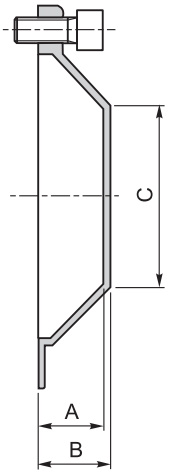

	A	B	C
W 63 - WR 63	26.5	29	Ø35
W 75 - WR 75	24.5	27	Ø54
W 86 - WR 86	26.5	29	Ø71
W 110 - WR110	27.5	30	Ø89

29 CUSTOMER'S SHAFT

Make the driven shaft to be coupled to the gear unit's output shaft from a good quality steel, respecting the dimensions given in the table.
A device such as that illustrated below should also be installed to secure the shaft axially. Take care to verify and dimension the various components to suit the needs of the application.

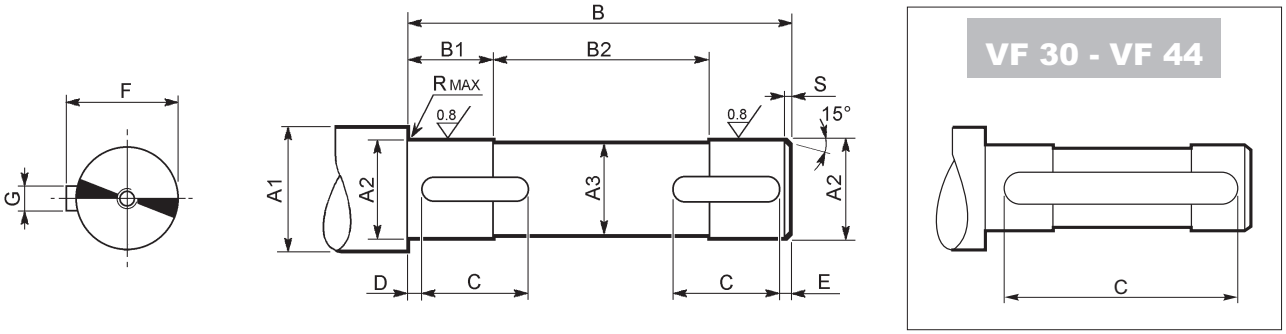

	A1	A2	A3	B	B1	B2	C	D	E	F	G	R	S	UNI 6604
VF 30	≥ 19	14 f7	13	53	18.5	16	40	6.5	6.5	16	5 h9	0.5	1.5	5x5x40 A
VF 44	≥ 23	18 f7	17	62	22.5	17	50	6	6	20.5	6 h9	0.5	1.5	6x6x50 A
VF 49	≥ 30	25 f7	24	80	20.5	39	20	2	2	28	8 h9	1	1.5	8x7x20 A
W 63	≥ 30	25 f7	24	118	38	42	35	2	2	28	8 h9	1	1.5	8x7x35 A
W 75	≥ 35	28 f7	27	125	38	49	40	2	2	31	8 h9	1	1.5	8x7x40 A
	≥ 35	30 f7	29	125	38	49	40	2	2	33	8 h9	1	1.5	8x7x40 A
W 86	≥ 42	35 f7	34	138	43	52	40	2	2	38	10 h9	1.5	1.5	10x8x40 A
W 110	≥ 48	42 f7	41	153	43	67	50	2	2	45	12 h9	1.5	2	12x8x50 A
VF 130	≥ 52	45 f7	44	163	50.5	62	60	2.5	2.5	49.5	14 h9	2.5	2	14x9x60 A
VF 150	≥ 57	50 f7	49	173	53	67	70	2.5	2.5	53.5	14 h9	2.5	2	14x9x70 A
VF 185	≥ 68	60 f7	59	188	63	62	80	2.5	2.5	64	18 h9	2.5	2	18x11x80 A
VF 210	≥ 99	90 f7	89	258	83	92	80	3	3	95	25 h9	2.5	2.5	25x14x80 A
VF 250	≥ 121	110 h7	109	318	83	152	80	3	3	116	28 h9	2.5	2.5	28x16x80 A

30 TORQUE LIMITER

30.1 Description

The friction-based torque limiter, available for wormgears type **VF44 - VF49** and **W63…W110**, is designed to protect the transmission from accidental overloads which could damage the drive elements. Against conventional external torque limiters, this versatile solution lends the following advantages:

• unchanged external dimensions against standard same model standard units
• maintenance-free, as the system is permanently lubed
• slip torque can be easily adjusted by means of a simple manual operation from the outside of the gearbox
• slipping, even if continuous, does not create any damage or wear to the mechanical parts, since slipping parts are constantly separated by an oil film.

We advise against installing this device to lifting equipment.

30.2 Operating principle

The torque limiter basically consists of a double tapered clutch with active surfaces machined on (bronze) worm wheel and hub of output shaft (nodular cast iron GS400/12). Bore of output shaft allows shaft mounting of gear unit onto driven machine.
Active surfaces of the torque limiter are pressed against each other by thrust generated by adequately proportioned spring washers. Transmissible torque is proportional to axial force applied by the springs and adjustment of torque setting is easily conducted manually through an external ring nut.

30.3 Protection of the machine from overloads

The torque limiter, properly adjusted in function of the torque necessary for the driven equipment, protects all mechanical components of the transmission avoiding any damage due to overloads.

30.4 Reversing of a self-locking unit

In some applications it may be desired to rotate the output shaft while machine is not operating. Such a situation is not always possible with high-ratio self-locking worm gears. Using the torque limiter it is possible to conduct such operation untightening the ring nut.

30.5 VF…L, W…L

L1							
	N	A	V	U	F1 FC1 FR1 FA1	F2 FC2 FR2 FA2**	P1 P2
VF VF/VF*						** ⊖ VF 49	
	U	UF1 UFC1	UF2 UFC2	UFCR1	UFCR2		
W VF/W*		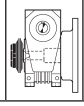	⊖		⊖		

L2							
	N	A	V	U	F1 FC1 FR1 FA1**	F2 FC2 FR2 FA2	P1 P2
VF VF/VF*					** ⊖ VF 49		
	U	UF1 UFC1	UF2 UFC2	UFCR1	UFCR2		
W VF/W*		⊖	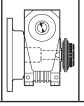	⊖	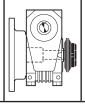		

* On double worm gear units the torque limiter is fitted on 2nd reducer (larger size) for the L1 or L2 configurations. Same is fitted on 1st reducer (smaller) when the LF configuration is specified.

LF			
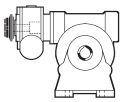	VF/W	44/75	44/86	49/110
	W/VF	63/130	86/150	86/185

Unless otherwise specified VF…L gear units are supplied with ring nut on the left hand side (L1), viewing from the electric motor and gearbox in the B3 mounting position.

30.6 Dimensions

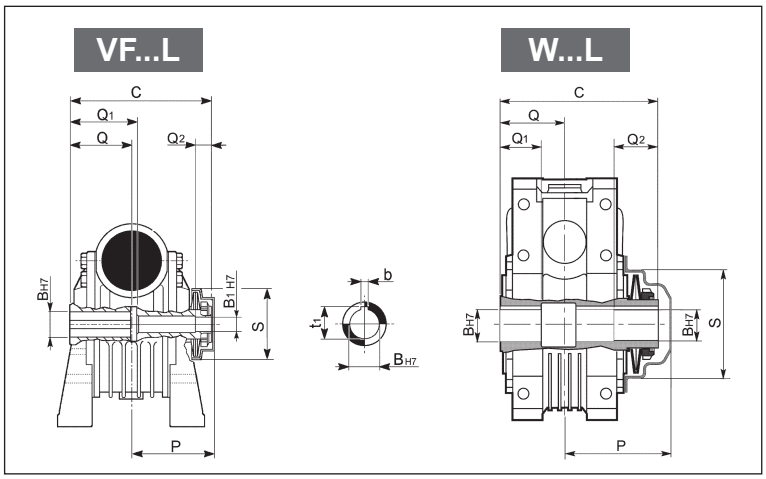

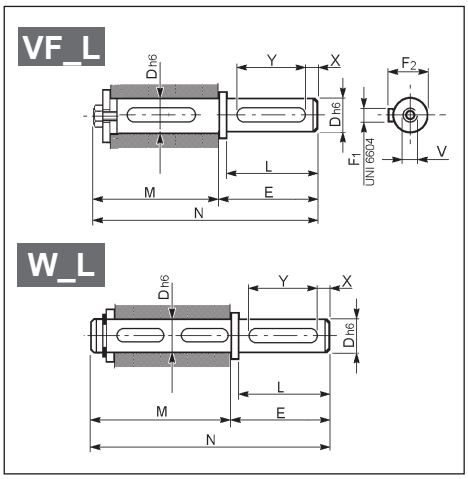

	Torque limiter										Single output shaft									
	C	Q	Q1	Q2	P	S	B H7	B1 H7	t1	b	L	D h6	E	F1	F2	M	N	V	X	Y
VF 44L	79	32	32	12	48	42.5	18	11	20.8	6	40	18	45	6	20.5	86	131	M6x16	5	30
VF 49L	105	41	51	15	63.5	66.5	25	14	28.3	8	60	25	65	8	28	114.5	179.5	M8x19	5	40
W 63L	145	60	40	40	100	77	25	-	28.3	8	60	25	65	8	28	152	217	M8x19	5	50
W 75L_D30	154.5	63.5	40	40	104	100	30	-	33.3	8	60	30	65	8	33	161.5	226.5	M10x22	5	50
W 86L	170	70	50	45	113	119	35	-	38.3	10	60	35	65	10	38	179	244	M10x22	5	50
W 110L	191	77.5	55	45	133	134	42	-	45.3	12	75	42	80	12	45	200	280	M12x28	7.5	60

30.7 Slip torque setting

A preliminary slip torque setting is conducted at the factory. Reference is made to torque rating Mn_2 [n_1=1400] of the captioned VF or W gear unit.
Here below the operations performed at the factory for the initial adjustment are listed.
Same steps, with the exception of step (2), must be followed when a different torque setting is required.

1. Ring nut is tightened until spring washers are sufficiently loaded that manual rotation is hardly possible.

2. By means of an engraver marks are made, in identical (angular) position, on both the ring nut and the hollow shaft.
Setting will then be referred to as the zero-point for the consequent slip torque adjustment, through turning of the ring nut.

3. Ring nut is then turned of the number of turns, or fraction of, corresponding to nominal torque rating Mn_2 of the captioned gear unit. In this case the diagram shown here under refers as to the proportion between number of turns and transmissible torque. Same diagram comes handy for customised torque adjustments, should these be required with time.

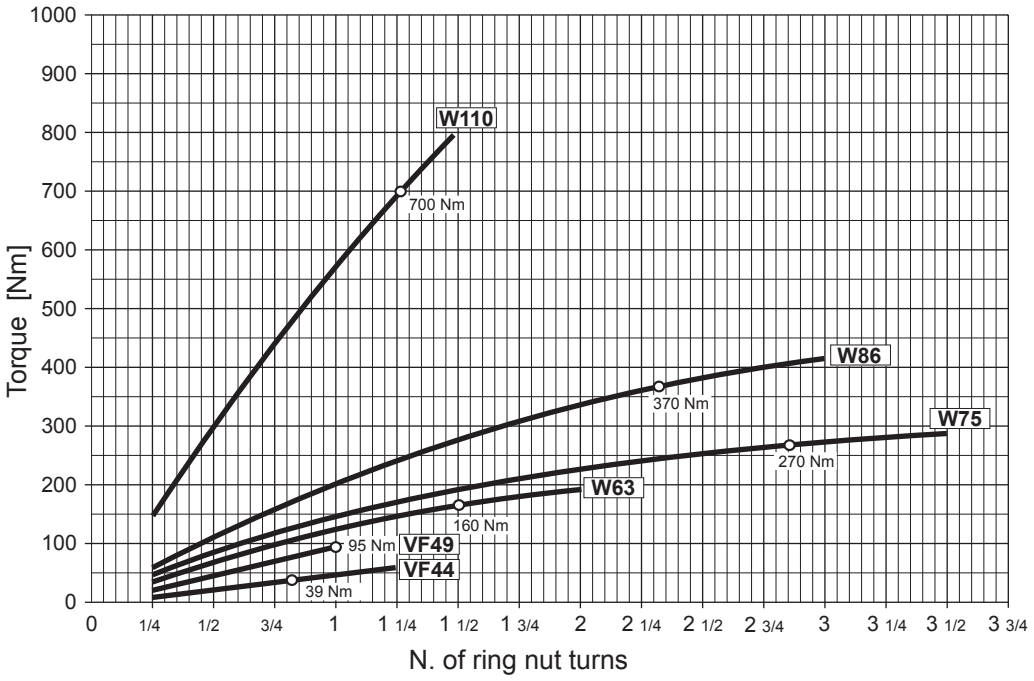

VF-EP / W-EP - GEARBOXES AND GEARMOTORS FOR CORROSIVE AND ASEPTIC ENVIRONMENTS

31 MAIN BENEFITS OF THE EP (Enhanced Protection) SERIES FOR THE FOOD AND BEVERAGE INDUSTRIES

All companies involved in the food and beverage industry today have the choice of a newly designed range of products perfectly suiting their hygiene and corrosion-resistant specifications, which are not normally available among standard products.
With the utmost attention being given to oil tightness and wash down of the gearmotor's exterior surfaces, this allows the unit to be installed in the close proximity of the food process, without the need of screening by cabinets or guards.
The epoxy coating, with a total thickness of ca. 200 µm, provides superior abrasion and corrosion resistance properties. The complete unit in fact, whether gearmotor or gearbox only, is first coated with a two-part epoxy primer layer, followed by a highly resistant two part epoxy finish coating, which is lead-and chrome-free. The material is registred by NSF and FDA for the food-processing and pharmaceutical industries, for incidental food contact , and besides resisting the corrosion of most acid and alkaline substances, is also well suited against most chemical detergents commonly used in the industry. As per the Norm ISO 9223, the epoxy coating provided is suitable for the most aggressive environments, top classified C5 in the corrosivity scale.
Three colours are available for the finish, identified through the RAL code numbers RAL 9010 (white), 5010 (blue) e 9006 (light grey).
The **_EP** product can be further tailored to specific requirements through various options and mounting accessories.
Frame sizes available: 44 (excepted VFR style), 49, 63, 75, 86. Motor availability: 0,12 through 4 kW, both compact type and IEC – standard 2, 4 and 6 poles.

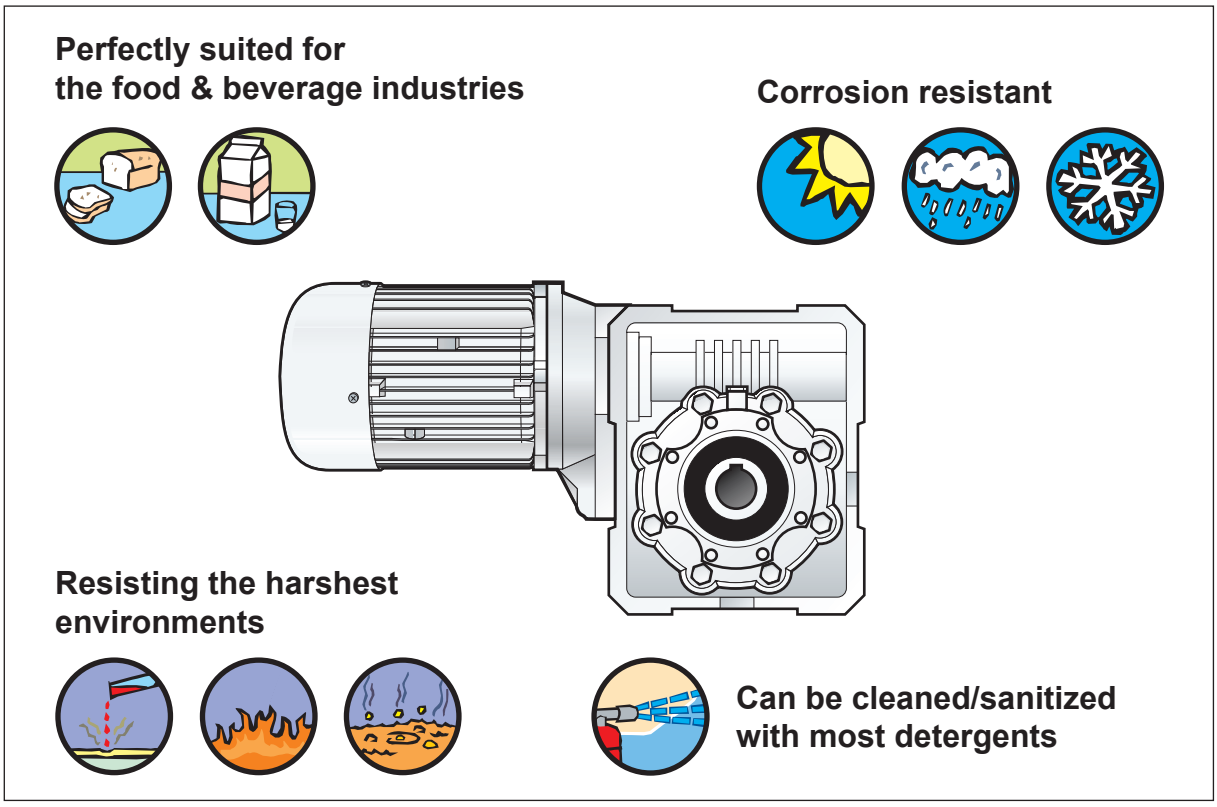

ARRANGEMENT FOR THE GEAR UNIT

1. The speed reducer is fully sealed to minimise contamination of the environment.
2. Stainless steel output shaft - AISI 316.
3. Stainless steel nameplate and bolts.
4. Through holes facilitate discharge of water after wash-down.
5. In option is available lubricant UH1-class synthetic oil registred by NSF for the food-processing and pharmaceutical industries . In compliance with FDA for incidental food contact.
6. Oil seals loaded with stainless steel inner spring. Availabilty of washdown duty double lip oil seals with stainless steel frame.
7. Exterior surfaces are primed and paint finished with a two-part epoxy coating, FDA and NSF approved (depending on color choice) for incidental food contact.
8. Button plugs for unused mounting holes.

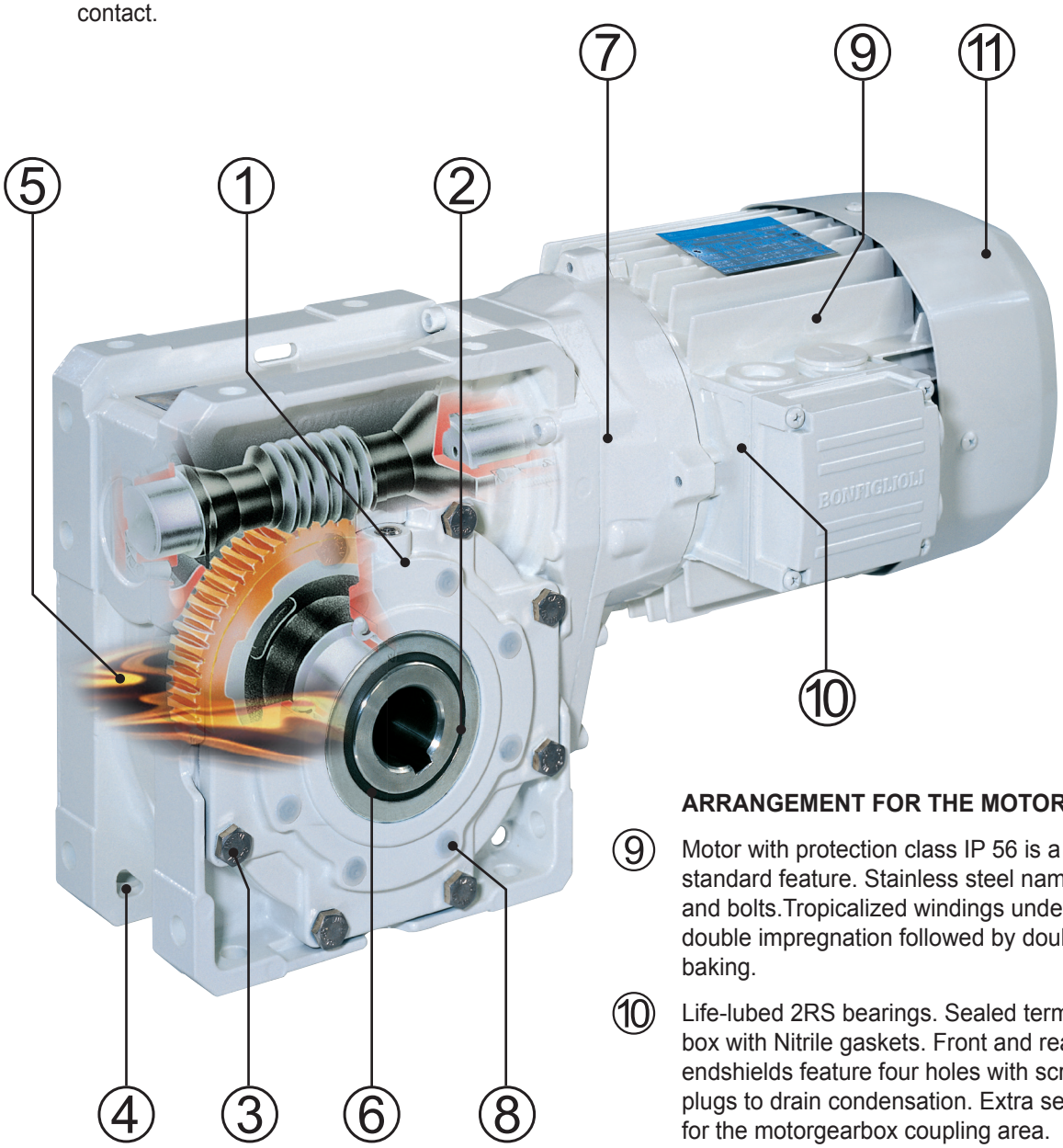

ARRANGEMENT FOR THE MOTOR

9. Motor with protection class IP 56 is a standard feature. Stainless steel nameplate and bolts.Tropicalized windings undergo double impregnation followed by double baking.
10. Life-lubed 2RS bearings. Sealed terminal box with Nitrile gaskets. Front and rear endshields feature four holes with screw plugs to drain condensation. Extra sealing for the motorgearbox coupling area.
11. Chemically inert fan.

32 DESIGNATION

GEAR UNIT

W-EP — 63 U 30 P90 B14 B3 RAL9010 ....

OPTIONS

PAINTING

NP unpainted	
RAL9010	
RAL5010	
RAL9006 (not in compliance with FDA and NSF)	

MOUNTING POSITION

VF-EP 44 VF-EP 49	**B3**
W-EP 63 W-EP 75 W-EP 86	**B3** (default), **B6**, **B7**, **B8**, **V5**, **V6**

MOTOR MOUNTING
B5, B14 (IEC standard)

INPUT CONFIGURATION

	VF-EP	VF-EP R	W-EP	W-EP R
P(IEC)	P63...P80	P63	P71...P112	P63...P90
S_	⊖	⊖	S1...S3	⊖

GEAR RATIO

VERSION

GEAR FRAME SIZE
VF-EP: **44, 49**
W-EP: **63, 75, 86**

— (blank)
R (helical-worm gear unit ⊖ VF-EP 44)

GEAR TYPE
VF-EP
W-EP

MOTOR

BN-EP 80B 4 B14 230/400-50 CLF .... **RAL9010** ....

OPTIONS

PAINTING

NP unpainted	
RAL9010	
RAL5010	
RAL9006 (not in compliance with FDA and NSF)	

TERMINAL BOX POSITION
W (default), **N**, **E**, **S**

INSULATION CLASS
CL F standard
CL H option

VOLTAGE-FREQUENCY

VERSION
— (integral motor)
B5, B14 (IEC motor)

POLE NUMBER
2, **4**, **6**,

MOTOR SIZE
1SC ... 3LC (integral motors)
63 ... 112 (IEC motors)

MOTOR TYPE
M-EP = 3-phase integral
BN-EP = 3-phase IEC

33 GEARBOX OPTIONS

PX
Wash down duty oil seals for the output shaft. The particular oil seals, offered as an option, make the gearmotor suitable for arduous environments where frequent washdowns occur, often with high-pressure hot water, together with sanitizing agents. The stainless steel screen and the low friction PTFE double lip design provide an extended life and improved sealing function even under extreme conditions with the presence of aggressive media.

PV
Fluoro elastomer rings on output shaft. Stainless steel loading spring.

UH1
Food grade synthetic lubricant. The gearbox is factory filled with “long life” lubricant, approved for incidental food contact and registered as UH1 by the NSF for the food and pharma industry, it also satisfy the FDA 21 CFR Sec. 178.3570 norms.
It’s polyglycol-based synthetic nature, not only extends the application range from temperatures of –25 °C to +150 °C, but does not require periodical oil change thus, with the absence of contamination, the gearbox is virtually maintenance-free.

CERTIFICATES

AC - Certificate of compliance
The document certifies the compliance of the product with the purchase order and the construction in conformity with the applicable procedures of the Bonfiglioli Quality System.

CC - Inspection certificate
The document entails checking on order compliance, the visual inspection of external conditions and of mating dimensions. Checking on main functional parameters in unloaded conditions is also performed along with oil seal proofing, both in static and in running conditions. Units inspected are sampled within the shipping batch and marked individually.

34 MOTOR OPTIONS

The available options for BN-EP and M-EP motors are: D3, E3, K1, H1, NH1, RC, RV, ACM, CC, CUS, S2, S3, S9.

For more detailed information please consult the Electric Motor section in this book.

35 OTHERS INFORMATION ABOUT GEARBOX AND GEARMOTOR

Mounting positions, technical data, motor availability,moments of inertia and dimensions of **VF-EP** e **W-EP** series don't change among equivalent **VF** and **W** product series. In the same way, information about **M-EP** and **BN-EP** motors don't change among equivalent **M** and **BN** product series. All of these information can be obtained in the related chapters of this catalogue.

36 THE ACCESSORIES FOR THE _EP SERIES

Depending on the mounting pattern, the gearbox can be complemented with the following pieces of equipment:
- AISI 316 stainless steel plug-in solid shaft, both single and double projection
- epoxy paint coated torque arm (specify RAL_)
- safety cover for the unused hollow shaft area – plastic type for W63, W75 and W86 units, metal type nitrile coated for VF 44 and VF 49, with stainless steel fasteners. IP 56 protection achieved after assembling.

36.1 Plug-in output shaft

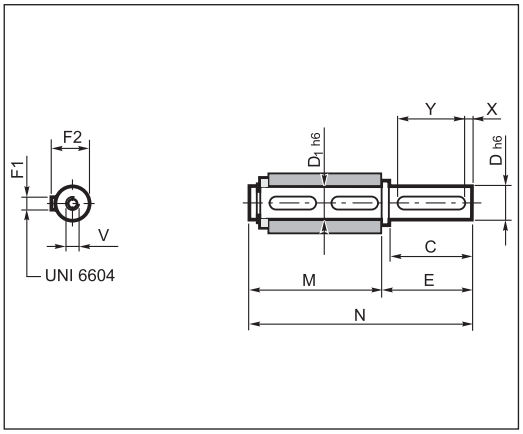

	C	D	D1	E	F1	F2	M	N	V	X	Y
VF-EP 44	40	18	18	45	6	20.5	70	115	M6x16	5	30
VF-EP 49 **VF-EP R 49**	60	25	25	65	8	28	89	154	M8x19	5	50
W-EP 63 **W-EP R 63**	60	25	25	65	8	28	127	192	M8x19	5	50
W-EP 75 **W-EP R 75**	60	30	30	65	8	33	134	199	M10x22	5	50
W-EP 86 **W-EP R 86**	60	35	35	65	10	38	149	214	M10x22	5	50

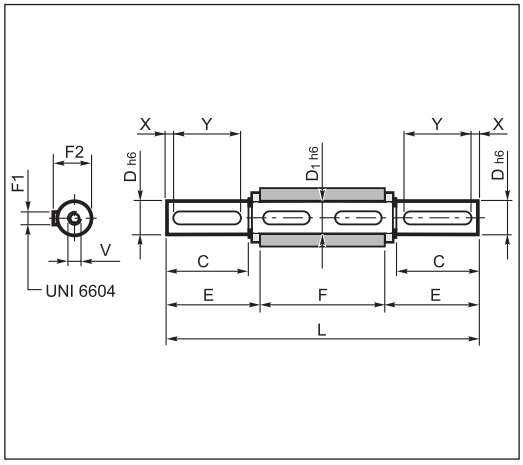

	C	D	D1	E	F	F1	F2	L	V	X	Y
VF-EP 44	40	18	18	42.7	64	6	20.5	149.4	M6x16	5	30
VF-EP 49 **VF-EP R 49**	60	25	25	63.2	82	8	28	208.4	M8x19	5	50
W-EP 63 **W-EP R 63**	60	25	25	63.2	120	8	28	246.4	M8x19	5	50
W-EP 75 **W-EP R 75**	60	30	30	64	127	8	33	255	M10x22	5	50
W-EP 86 **W-EP R 86**	60	35	35	64	140	10	38	268	M10x22	5	50

36.2 Torque arm

VF-EP 44 ; VF-EP 49

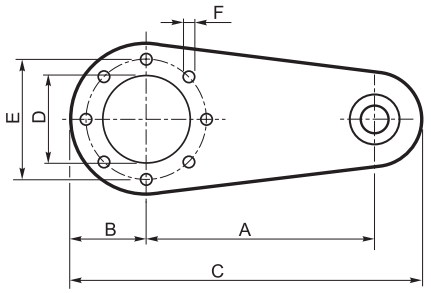

Painting:
NP (unpainted)
RAL 9010
RAL 5010
RAL 9006

Without vibration-dampening bushing

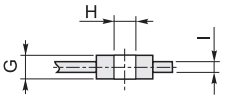

W-EP 63 ; W-EP 75 ; W-EP 86

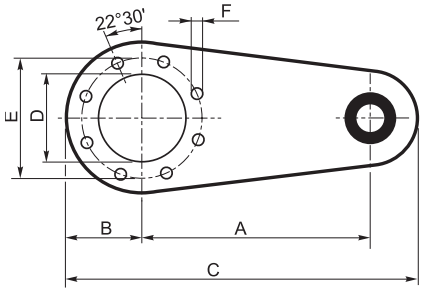

Painting:
NP (unpainted)
RAL 9010
RAL 5010
RAL 9006

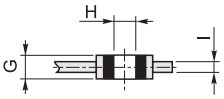

	A	B	C	D	E	F	G	H	I
VF-EP 44	100	40	157.5	50	65	7	14	8	4
VF-EP 49 **VF-EP R 49**	100	55	172.5	68	94	7	14	8	4
W-EP 63 **W-EP R 63**	150	55	233	75	90	9	20	10	6
W-EP 75 **W-EP R 75**	200	63	300	90	110	9	25	20	6
W-EP 86 **W-EP R 86**	200	80	318	110	130	11	25	20	6

36.3 Safety cover

VF-EP 44 ; VF-EP 49

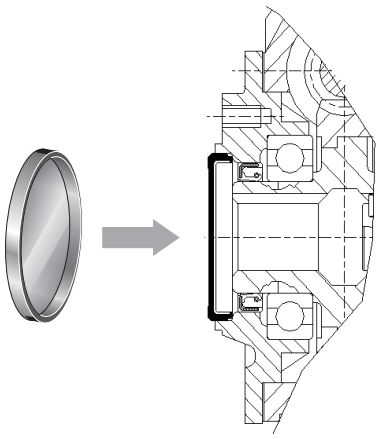

W-EP 63 ; W-EP 75 ; W-EP 86

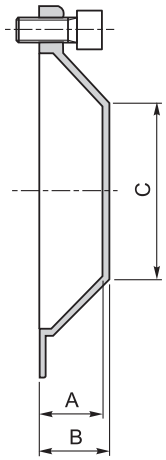

	A	B	C
W-EP 63 P	26.5	29	Ø35
W-EP 75 P	24.5	27	Ø54
W-EP 86 P	26.5	29	Ø71

RVS LIMIT-STOP DEVICE

37 GENERAL INFORMATION

The limit-stop device type RVS has been designed to fit Bonfiglioli Riduttori worm gearmotors to operate:

- Green house windows and shades
- Remote-controlled gates
- Hopper frame windows
- Dosing devices for the livestock farming industry
- Butterfly valves

Worm gearmotors equipped with the RVS limit switch device are suitable for linear and rotary intermittent duty applications requiring accurate and repetitive positioning.
For the applications listed above, typically light duty, worm gear-motors should only be selected from relevant selection charts, given at paragraph 40.
The drive selection will then comply with both the application duty and the max. peripheral speed constraints of the limit-switch device.
The configuration is complete when the limit-switch device RVS is flanged onto the gearmotor through the relevant assembly kit (see next page).
Configuration kits are available for worm gears type VF 49, W 63, W 75, and W 86 only.
Please note that **RVS** devices will only fit F-flanged VF 49 and FC-flanged W worm gears.
RVS mounting side is opposite to flange.

37.1 Technical features

The working principle of the limit-stop device is based on the differential movement of two pairs of wheels – each equipped with a cam – and the relative operation of precision micro-switches that stop and reverse motion through relays (to be fitted by the installer).
Travel end positions, normally the open and closed positions of application frame, are easily set using a common Allen key after gearmotor installation.
Once adjusted, the unit will retain its settings over time for guaranteed motion repeatability.
In its basic version, the **RVS** limit-stop unit comes with a pair of approx. 1-m long cables. Internal wiring is made at the factory.
The RVS unit is available in the following variants:

RVS ME: the limit switch features a 6-stud terminal box for external wiring of cables wiring of cables to main relais.

RVS DM: features a double set of micro-switches, connected in series, for absolute reliability where applicable regional standards or regulations call for a redundant design.

RVS ME DM: features the combination of the two options described above.

Regardless to the variant the RVS limit switch device offers the following features:
- Extremely quite operation
- Space efficiency
- Ease of installation and setting
- Overall protection IP55
- Adjustment range within a maximum of 43 revolutions of drive shaft.

38 ORDERING CODES

Determine which device or variant best suits the specific application and locate the part number in the table below:

RVS	RVS ME	RVS DM	RVS ME DM
cod. 193312025	cod. 193312026	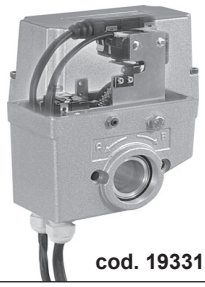 cod. 193312027	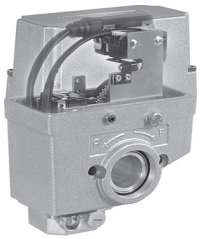 cod. 193312028

Select also the part number of the specific configuration kit for the speed reducer the limit-stop device is to be installed to:

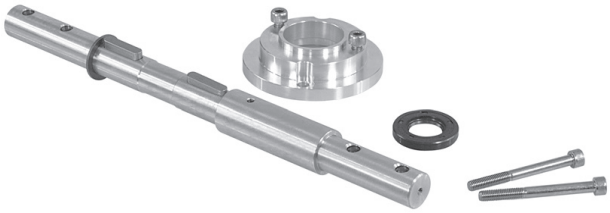

cod. 192860001	cod. 192860002	cod. 192860003	cod. 192860004
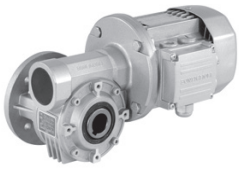 VF 49 F - VFR 49 F	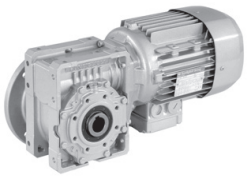 W 63 UFC - WR 63 UFC	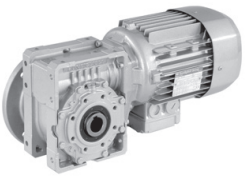 W 75 UFC - WR 75 UFC	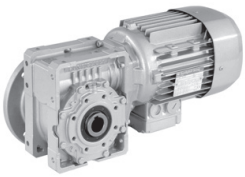 W 86 UFC - WR 86 UFC

39 DESIGNATION

Ordering code for RVS acceptable **VF** and **W** gear units.

W R 75 UFC1 D30 240 P71 B5 B3 ....

OPTIONS

MOUNTING POSITION
B3 (default), **B6, B7, B8, V5, V6**

IEC MOTOR MOUNTING
B5
B14

INPUT TYPE
VF: **P** (IEC)
W: **S_, P** (IEC)

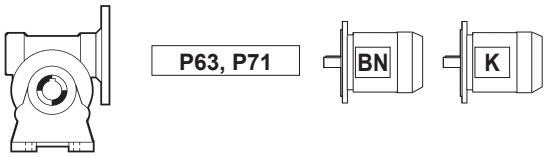

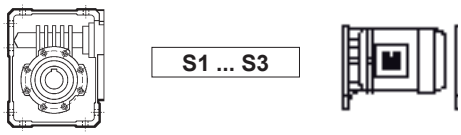

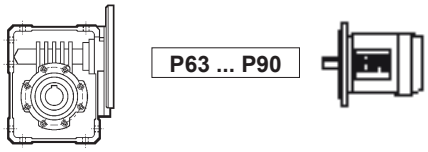

GEAR RATIO

SHAFT BORE
D30 (W75 alone)

VERSION
VF: **F**
W: **UFC**

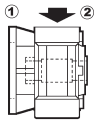

F (1, 2)

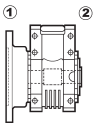

UFC (1, 2)

FRAME SIZE
VF: **49**
W: **63, 75, 86**

HELICAL REDUCTION
/
R

GEAR TYPE

VF

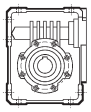

W

40 GEARMOTOR SELECTION

0.12 kW

n_2 min^{-1}	M_2 Nm	i	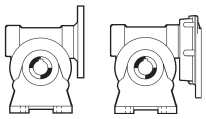	IEC			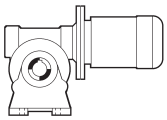		
4.7	98	300	**VFR 49_300**	**P63**	**BN63A4**				
5.8	89	240	**VFR 49_240**	**P63**	**BN63A4**				
6.7	83	210	**VFR 49_210**	**P63**	**BN63A4**				
7.8	76	180	**VFR 49_180**	**P63**	**BN63A4**				
10.4	64	135	**VFR 49_135**	**P63**	**BN63A4**				
14.0	41	100	**VF 49_100**	**P63**	**BN63A4**		**VF 49_100**	**P63**	**K63A4**
17.5	37	80	**VF 49_80**	**P63**	**BN63A4**		**VF 49_80**	**P63**	**K63A4**
20.0	34	70	**VF 49_70**	**P63**	**BN63A4**		**VF 49_70**	**P63**	**K63A4**
23.3	31	60	**VF 49_60**	**P63**	**BN63A4**		**VF 49_60**	**P63**	**K63A4**

0.18 kW

n_2 min^{-1}	M_2 Nm	i	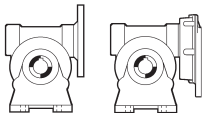	IEC			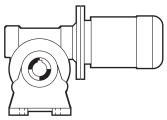		
7.8	112	180	**VFR 49_180**	**P63**	**BN63B4**				
10.4	95	135	**VFR 49_135**	**P63**	**BN63B4**				
14.0	61	100	**VF 49_100**	**P63**	**BN63B4**				
17.5	54	80	**VF 49_80**	**P63**	**BN63B4**		**VF 49_80**	**P63**	**K63B4**
20.0	49	70	**VF 49_70**	**P63**	**BN63B4**		**VF 49_70**	**P63**	**K63B4**
23.3	45	60	**VF 49_60**	**P63**	**BN63B4**		**VF 49_60**	**P63**	**K63B4**

0.25 kW

n_2 min^{-1}	M_2 Nm	i	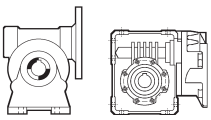	IEC			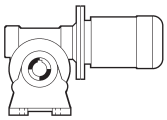		
4.7	214	300	**WR 63_300**	**P71**	**BN71A4**				
5.8	192	240	**WR 63_240**	**P71**	**BN71A4**				
7.3	170	192	**WR 63_192**	**P71**	**BN71A4**				
10.4	136	135	**WR 63_135**	**P71**	**BN71A4**				
12.3	121	114	**WR 63_114**	**P71**	**BN71A4**				
14.0	82	100	**VF 49_100**	**P71**	**BN71A4**				
17.5	72	80	**VF 49_80**	**P71**	**BN71A4**				
20.0	66	70	**VF 49_70**	**P71**	**BN71A4**				
23.3	61	60	**VF 49_60**	**P71**	**BN71A4**		**VF 49_60**	**P71**	**K71A4**

0.37 kW

n_2 min^{-1}	M_2 Nm	i		IEC				
4.7	382	300	**WR 86_300**	**P71**	**BN71B4**			
5.8	306	240	**WR 75_240**	**P71**	**BN71B4**			
7.3	290	192	**WR 86_192**	**P71**	**BN71B4**			
7.8	257	180	**WR 75_180**	**P71**	**BN71B4**			
9.3	226	150	**WR 75_150**	**P71**	**BN71B4**			
10.4	204	135	**WR 63_135**	**P71**	**BN71B4**			
12.3	181	114	**WR 63_114**	**P71**	**BN71B4**			
14.0	133	100	**W 63_100**	**P71**	**BN71B4**	**W 63_100**	**S1**	**M1SD4**
17.5	108	80	**VF 49_80**	**P71**	**BN71B4**			
20.0	98.3	70	**VF 49_70**	**P71**	**BN71B4**			
23.3	90.5	60	**VF 49_60**	**P71**	**BN71B4**			

0.55 kW

n_2 min^{-1}	M_2 Nm	i		IEC				
4.7	559	300	**WR 86_300**	**P80**	**BN80A4**			
5.8	483	240	**WR 86_240**	**P80**	**BN80A4**			
7.3	423	192	**WR 86_192**	**P80**	**BN80A4**			
7.8	376	180	**WR 75_180**	**P80**	**BN80A4**			
8.3	383	168	**WR 86_168**	**P80**	**BN80A4**			
9.3	331	150	**WR 75_150**	**P80**	**BN80A4**			
10.1	330	138	**WR 86_138**	**P80**	**BN80A4**			
11.7	287	120	**WR 75_120**	**P80**	**BN80A4**			
14.0	194	100	**W 63_100**	**P80**	**BN80A4**	**W 63_100**	**S1**	**M1LA4**
17.5	170	80	**W 63_80**	**P80**	**BN80A4**	**W 63_80**	**S1**	**M1LA4**
21.9	148	64	**W 63_64**	**P80**	**BN80A4**	**W 63_64**	**S1**	**M1LA4**
23.3	148	60	**W 75_60**	**P80**	**BN80A4**	**W 75_60**	**S1**	**M1LA4**

0.75 kW

n_2 min^{-1}	M_2 Nm	i		IEC				
7.3	568	192	**WR 86_192**	**P80**	**BN80B4**			
8.3	514	168	**WR 86_168**	**P80**	**BN80B4**			
9.3	444	150	**WR 75_150**	**P80**	**BN80B4**			
10.1	443	138	**WR 86_138**	**P80**	**BN80B4**			
11.7	386	120	**WR 75_120**	**P80**	**BN80B4**			
14.0	281	100	**W 75_100**	**P80**	**BN80B4**	**W 75_100**	**S2**	**M2SA4**
17.5	241	80	**W 75_80**	**P80**	**BN80B4**	**W 75_80**	**S2**	**M2SA4**
21.9	199	64	**W 63_64**	**P80**	**BN80B4**	**W 63_64**	**S2**	**M2SA4**
23.3	199	60	**W 75_60**	**P80**	**BN80B4**	**W 75_60**	**S2**	**M2SA4**

1.1 kW

n_2 min^{-1}	M_2 Nm	i		IEC				
10.1	652	138	**WR 86_138**	**P90**	**BN90S4**			
11.7	594	120	**WR 86_120**	**P90**	**BN90S4**			
14.0	443	100	**W 86_100**	**P90**	**BN90S4**	**W 86_100**	**S2**	**M2SB4**
17.5	384	80	**W 86_80**	**P90**	**BN90S4**	**W 86_80**	**S2**	**M2SB4**
21.9	326	64	**W 86_64**	**P90**	**BN90S4**	**W 86_60**	**S2**	**M2SB4**

1.5 kW

n_2 min^{-1}	M_2 Nm	i		IEC				
11.7	816	120	**WR 86_120**	**P90**	**BN90LA4**			
17.5	527	80	**W 86_80**	**P90**	**BN90LA4**	**W 86_80**	**S3**	**M3SA4**
21.9	448	64	**W 86_64**	**P90**	**BN90LA4**	**W 86_60**	**S3**	**M3SA4**

41 DIMENSIONS

VF 49_F - VFR 49_F

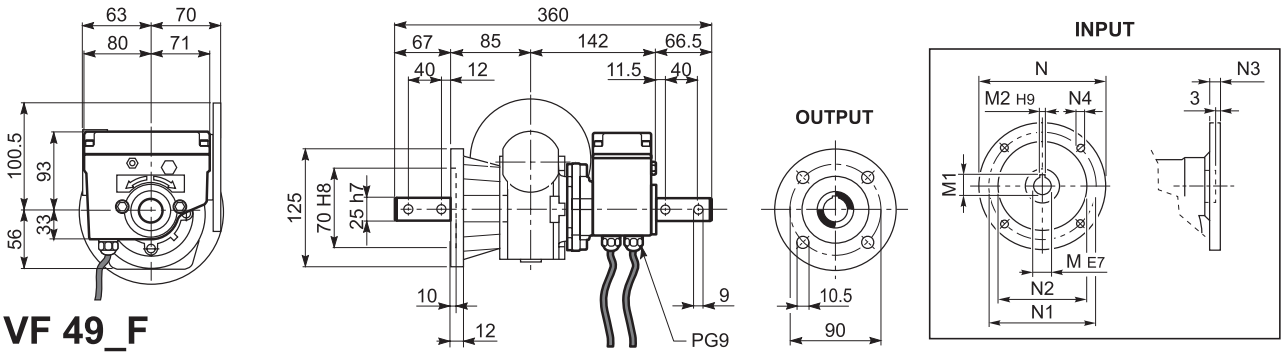

VF 49_F

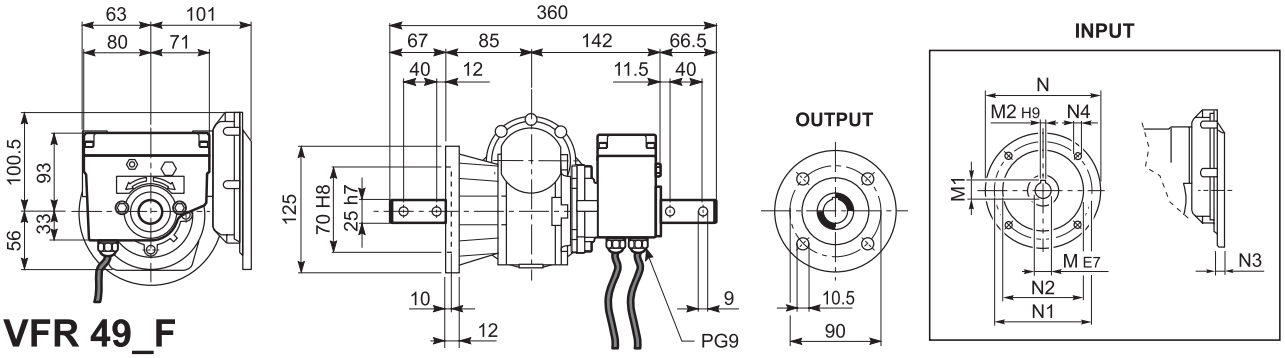

VFR 49_F

	M	M1	M2	N	N1	N2	N3	N4
VF 49_P 63	11	12.8	4	140	115	95	10.5	9.5
VF 49_P 71	14	16.3	5	160	130	110	10.5	9.5
VFR 49_P 63	11	12.8	4	140	115	95	11	M8x19

W 63 UFC_M - W 63 UFC - WR 63 UFC

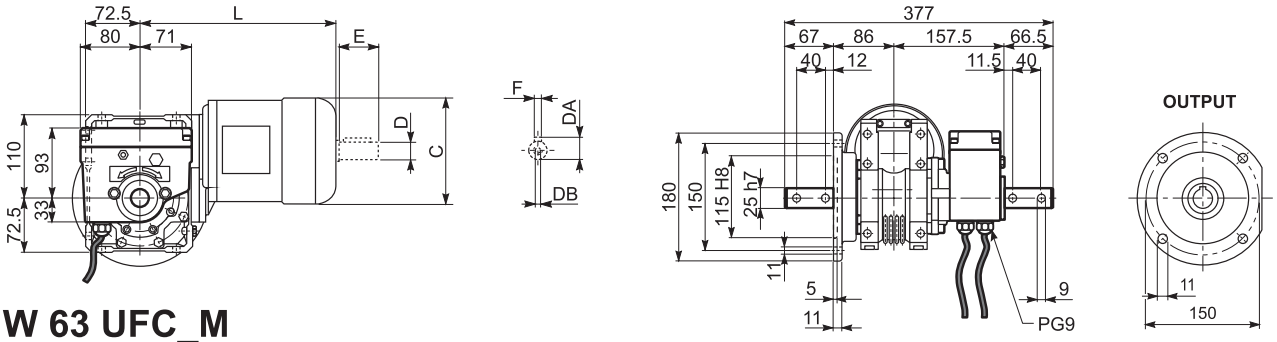

W 63 UFC_M

	C	D	DA	DB	E	F	L
W 63_S1 M1L	138	14	16	M5	30	5	289
W 63_S2 M2S	156	19	21.5	M6	40	6	317

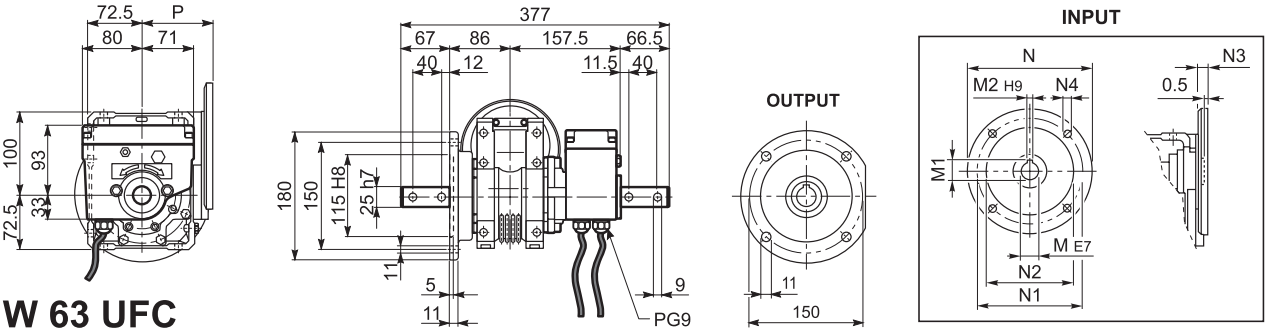

W 63 UFC

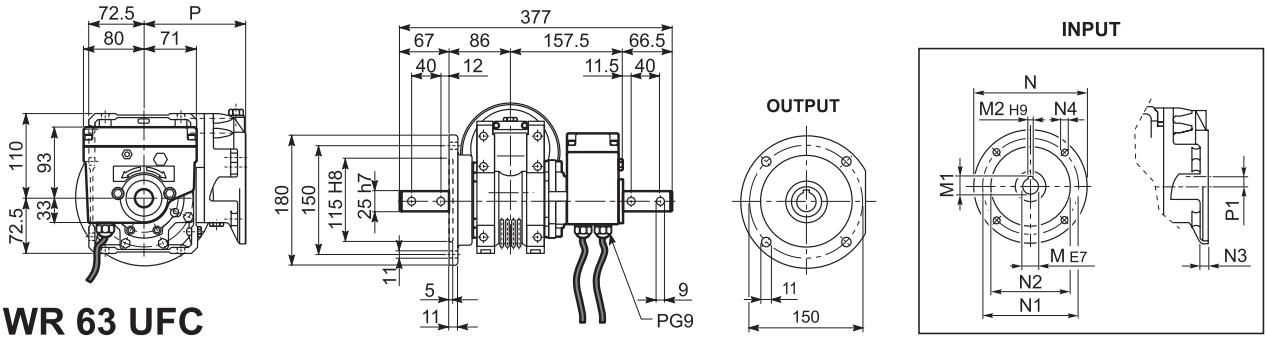

WR 63 UFC

	M	M1	M2	N	N1	N2	N3	N4	P	P1
W 63_P 71	14	16.3	5	160	130	110	11	9	95	-
W 63_P 80	19	21.8	6	200	165	130	12	11.5	102	-
W 63_P 90	24	27.3	8	200	165	130	12	11.5	102	-
WR 63_P 63	11	12.8	4	140	115	95	10	M8x10	133.5	11.42
WR 63_P 71	14	16.3	5	160	130	110	10	M8x10	133.5	11.42

W 75 UFC_M - W 75 UFC - WR 75 UFC

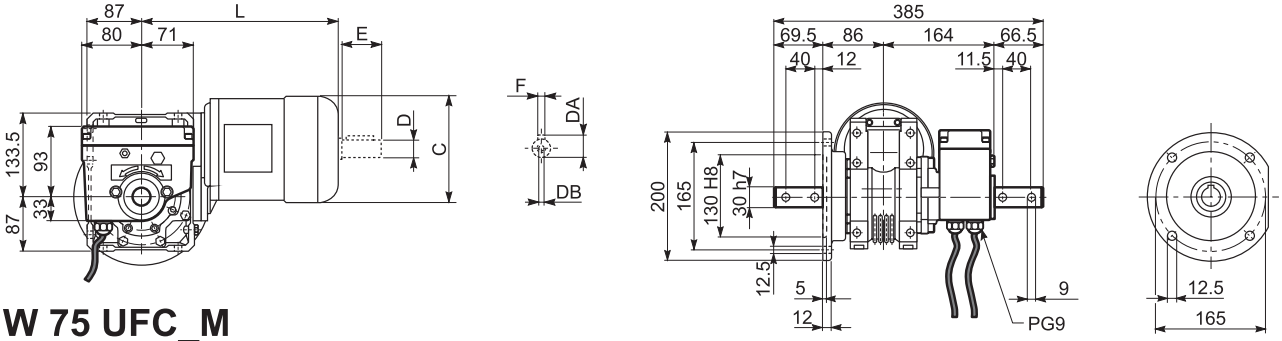

W 75 UFC_M

	C	D	DA	DB	E	F	L
W 75_S1 M1L	138	14	16	M5	30	5	308
W 75_S2 M2S	156	19	21.5	M6	40	6	333
W 75_S3 M3S	193	28	31	M10	60	8	376
W 75_S3 M3L	193	28	31	M10	60	8	408

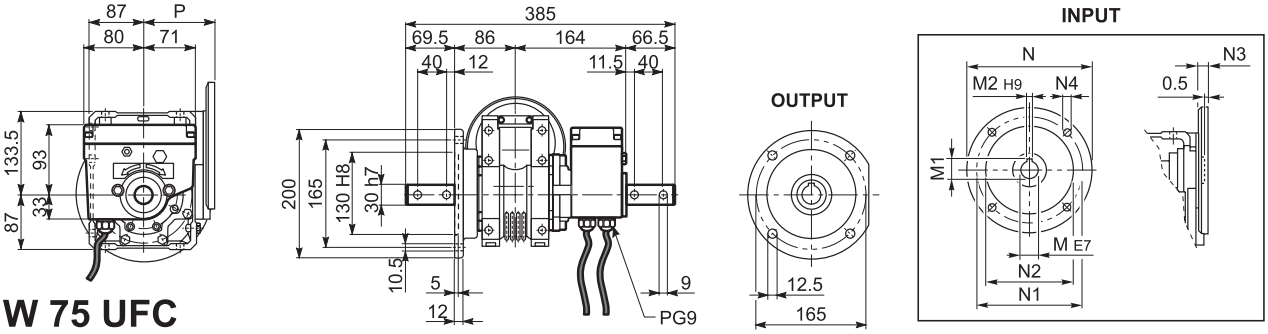

W 75 UFC

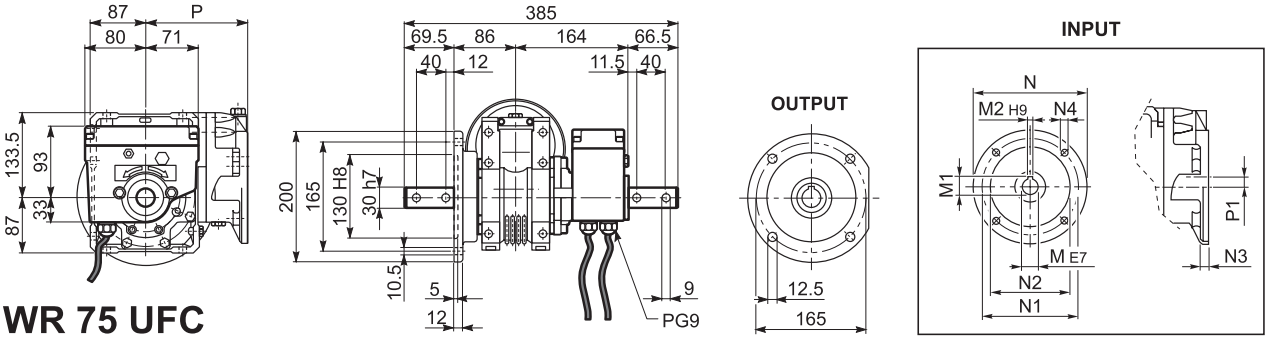

WR 75 UFC

	M	M1	M2	N	N1	N2	N3	N4	P	P1
W 75_P 71	14	16.3	5	160	130	110	11	9	112	-
W 75_P 80	19	21.8	6	200	165	130	12	11.5	112	-
W 75_P 90	24	27.3	8	200	165	130	12	11.5	112	-
WR 75_P 63	11	12.8	4	140	115	95	10	M8x10	152	23.53
WR 75_P 71	14	16.3	5	160	130	110	10	M8x10	152	23.53
WR 75_P 80	19	21.8	6	200	165	130	12	M10x13	163.5	11
WR 75_P 90	24	27.3	8	200	165	130	12	M10x13	163.5	11

W 86 UFC_M - W 86 UFC - WR 86 UFC

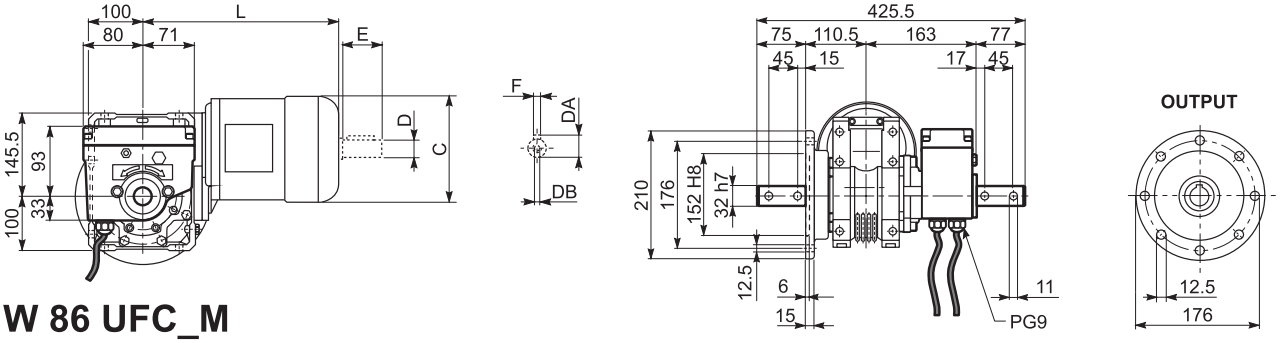

W 86 UFC_M

	C	D	DA	DB	E	F	L
W 86_S1 M1L	138	14	16	M5	30	5	324
W 86_S2 M2S	156	19	21.5	M6	40	6	349
W 86_S3 M3S	193	28	31	M10	60	8	392
W 86_S3 M3L	193	28	31	M10	60	8	424

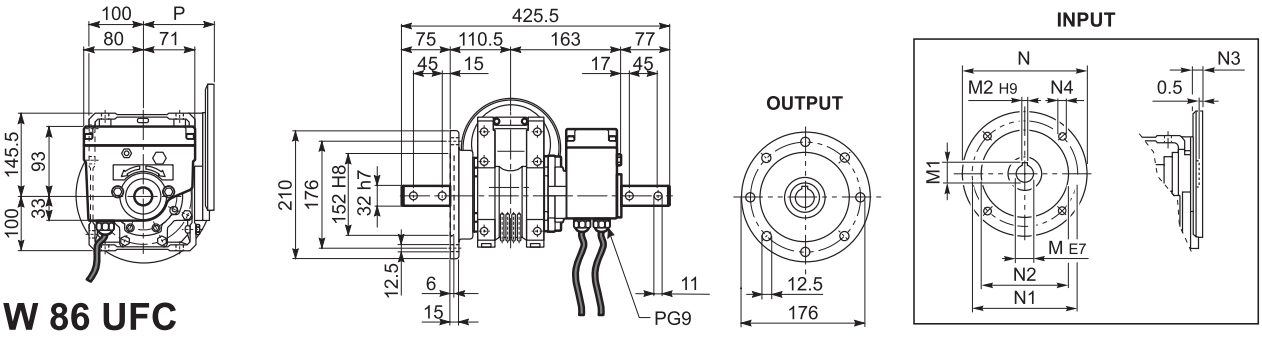

W 86 UFC

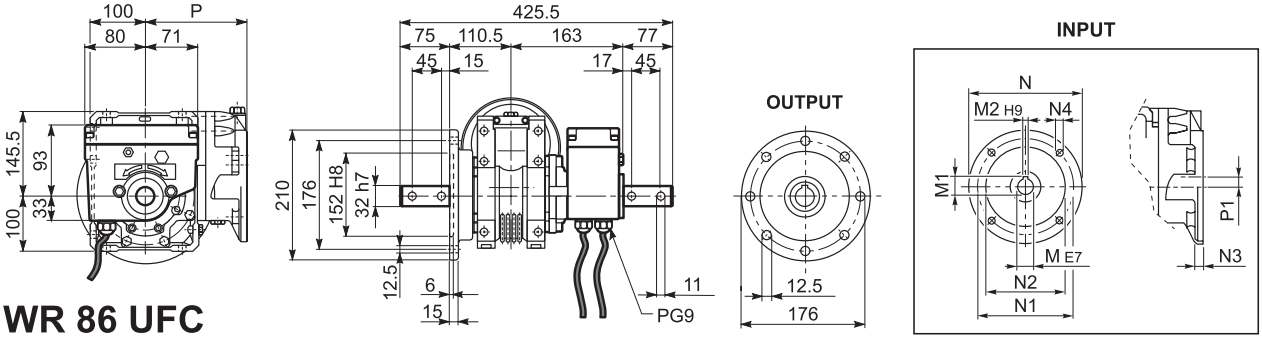

WR 86 UFC

	M	M1	M2	N	N1	N2	N3	N4	P	P1
W 86_P 71	14	16.3	5	160	130	110	11	9	128	-
W 86_P 80	19	21.8	6	200	165	130	12	11.5	128	-
W 86_P 90	24	27.3	8	200	165	130	12	11.5	128	-
WR 86_P 63	11	12.8	4	140	115	95	10	M8x10	168	35.4
WR 86_P 71	14	16.3	5	160	130	110	10	M8x10	168	35.4
WR 86_P 80	19	21.8	6	200	165	130	12	M10x13	179.5	22.9
WR 86_P 90	24	27.3	8	200	165	130	12	M10x13	179.5	22.9

42 OPTIONS

Limit switch modifications

ME

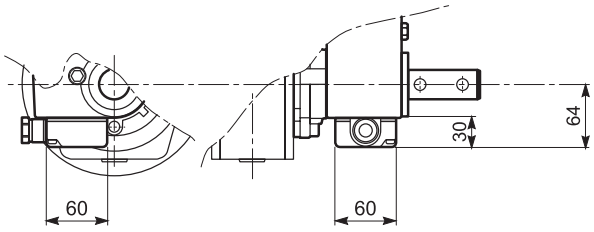

Version with terminal box

DM

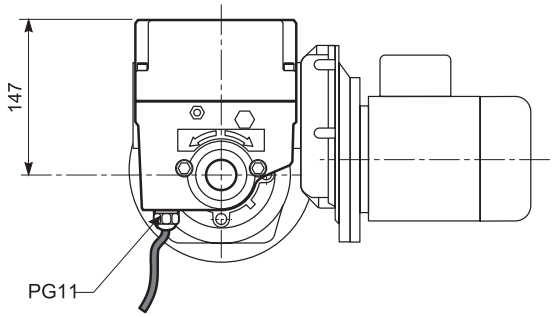

Four microswitch version

M1 SYMBOLS AND UNITS OF MEASUREMENT

Symbols	Units of Measure	Description
cosφ	–	Power factor
η	–	Efficiency
f_m	–	Power adjusting factor
I	–	Cyclic duration factor
I_N	[A]	Rated current
I_S	[A]	Locked rotor current
J_C	[Kgm^2]	Load moment of inertia
J_M	[Kgm^2]	Moment of inertia
K_c	–	Torque factor
K_d	–	Load factor
K_J	–	Inertia factor
M_A	[Nm]	Mean breakaway torque
M_B	[Nm]	Brake torque
M_N	[Nm]	Rated torque
M_L	[Nm]	Counter-torque during acceleration
M_S	[Nm]	Starting torque

Symbols	Units of Measure	Description
n	[min^{-1}]	Rated speed
P_B	[W]	Power drawn by the brake at 20°C
P_n	[kW]	Motor rated power
P_r	[kW]	Required power
t_1	[ms]	Brake response time with one-way rectifier
t_{1s}	[ms]	Brake response time with electronic-controlled rectifier
t_2	[ms]	Brake reaction time with a.c. disconnect
t_{2c}	[ms]	Brake reaction time with a.c. and d.c. disconnect
t_a	[°C]	Ambient temperature
t_f	[min]	Work time at constant load
t_r	[min]	Rest time
W	[J]	Braking work between service interval
W_{max}	[J]	Maximum brake work for each braking
Z	[1/h]	Permissible starting frequency, loaded
Z_0	[1/h]	Max. permissible unloaded starting frequency (I = 50%)

M2 GENERAL CHARACTERISTICS

M2.1 Production range

The asynchronous three-phase electric motors of BONFIGLIOLI RIDUTTORI's production, are available in basic designs IMB5 and IMB14 and derived versions, with the following polarities: 2, 4, 6, 2/4, 2/6, 2/8, 2/12.
The technical characteristics of compact motors, M type, are also supplied in this manual.

M2.2 Standards

The motors described in this catalogue are manufactured to the applicable standards shown in the following table.

(F 1)

Title	CEI	IEC
General requirements for rotating electrical machines	**CEI EN 60034-1**	**IEC 60034-1**
Terminal markings and direction of rotation of rotating machines	**CEI 2-8**	**IEC 60034-8**
Methods of cooling for electrical machines	**CEI EN 60034-6**	**IEC 60034-6**
Dimensions and output ratings for rotating electrical machines	**EN 50347**	**IEC 60072**
Classification of degree of protection provided by enclosures for rotating machines	**CEI EN 60034-5**	**IEC 60034-5**
Noise limits	**CEI EN 60034-9**	**IEC 60034-9**
Classification of type of construction and mounting arrangements	**CEI EN 60034-7**	**IEC 60034-7**
Rated voltage for low voltage mains power	**CEI 8-6**	**IEC 60038**
Vibration level of electric machines	**CEI EN 60034-14**	**IEC 60034-14**

The motors also comply with foreign standards adapted to IEC 60034-1 as shown here below.

(F 2)

DIN VDE 0530	Germany
BS5000 / BS4999	Great Britain
AS 1359	Australia
NBNC 51 - 101	Belgium
NEK - IEC 34	Norway
NF C 51	France
OEVE M 10	Austria
SEV 3009	Switzerland
NEN 3173	Netherlands
SS 426 01 01	Sweden

M2.3 Motors for USA and Canada

CUS

BN motors are available in NEMA Design C configuration (concerning electrical characteristics), in compliance with CSA (Canadian standard) C22.2 No. 100 and UL (Underwriters Laboratory) UL 1004-1. By specifying the option CUS the name plate is marked with both symbols shown here below.

C US

The CUS option does not apply to servo-ventilated motors.
US power mains voltages and the corresponding rated voltages to be specified for the motor are indicated in the following table:

(F 3)

Frequency	Mains voltage	V_{mot}
60 Hz	208 V	**200 V**
	240 V	**230 V**
	480 V	**460 V**
	600 V	**575 V**

CUS option is applicable onto 50 Hz operating motors as well.

Motors with voltage in ratio 2 (e.g. 230/460-60; 220/440-60) feature, as standard, a 9-stud terminal board. For same executions, as well as for 575V-60H tions, as well as for 575V-60Hz supply, the nominal rating is coincident with the correspondent 50Hz rating.
For DC brake motors type BN/M_FD, the rectifier is connected to a single-phase 230 VAC supply voltage in the motor terminal box.
Brake power supply for brake motors is as follows:

(F 4)

BN_FD **M_FD**
Wired to terminal box 1~230V a.c.

BN_FA **M_FA**		Specify
Separate power supply	230V Δ	230SA
Separate power supply	460V Y	460SA

Bonfiglioli Riduttori

M2.4 China Compulsory Certification

CCC

Electric motors destined for sale in the People's Republic of China have to be certified under the CCC (China Compulsory Certification) system. BN motors of up to 7 Nm in rated torque are available with CCC certification and a special nameplate bearing the mark shown below:

CCC option is not currently available for servo - ventilated motors.

M2.5 Directives 2006/95/EC (LVD) and 2004/108/EC (EMC)

BN and M motors meet the requirements of Directives 2006/95/EC (Low Voltage Directive) and 2004/108/EC (Electromagnetic Compatibility Directive) and their name plates bear the CE mark.
As for the EMC Directive, construction is in accordance with standards CEI EN 60034-1, EN 61000-6-2, EN 61000-6-4.
Motors with FD brakes, when fitted with the suitable capacitive filter at rectifier input (option **CF**), meet the emission limits required by Standard EN 61000-6-3:2007 "Electromagnetic compatibility - Generic Emission Standard - Part 6-3 Residential, commercial and light industrial environment".
Motors also meet the requirements of standard CEI EN 60204-1 "Electrical equipment of machines".
The responsibility for final product safety and compliance with applicable directives rests with the manufacturer or the assembler who incorporate the motors as component parts.

M2.6 Tolerances

As per the Norms applicable the tolerances here below apply to the following quantities.

(F 5)

-0.15 (1 - η) P ≤ 50kW	Efficiency
-(1 - cosφ)/6 min 0.02 max 0.07	Power factor
±20% *	Slip
+20%	Locked rotor current
-15% +25%	Locked rotor torque
-10%	Max. torque

* ± 30% for motors with Pn < 1 kW

M3 MECHANICAL FEATURES

M3.1 Versions

EC-normalised BN motors are available in the design versions indicated in table (F6) as per Standards CEI EN 60034-14.

Mounting versions are:

IM B5 (basic)
IM V1, IM V3 (derived)
IM B14 (basic)
IM V18, IM V19 (derived)

IM B5 design motors can be installed in positions IM V1 and IM V3; IM B14 design motors can be installed in positions IM V18 and IM V19.
In such cases, the basic design IM B5 or IM B14 is indicated on the motor name plate.
In design versions with a vertically located motor and shaft downwards, it is recommended to request the drip cover (always necessary for brake motors). This facility, included in the option list should be specified when ordering as it does not come as a standard device

(F 6)

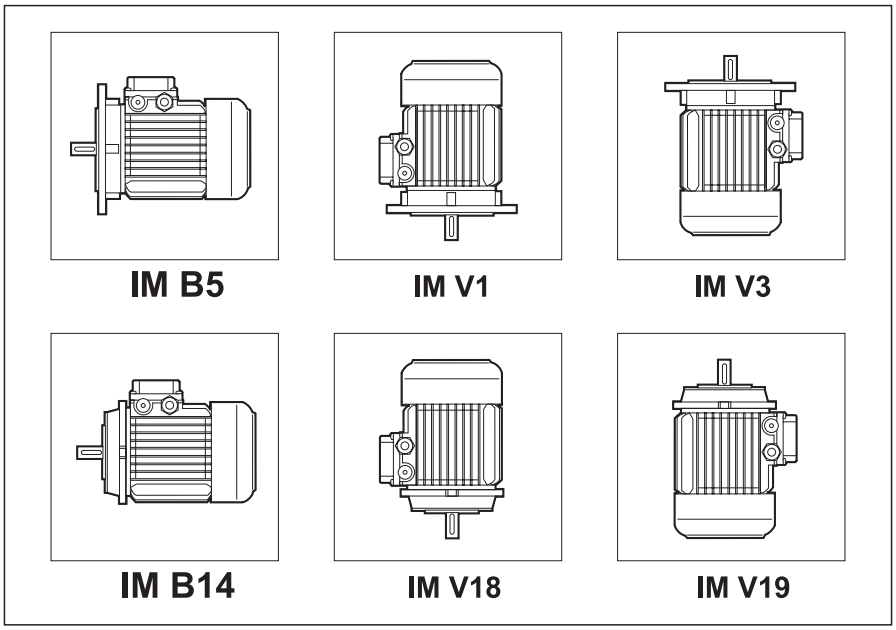

Flange output motors are also available with reduced coupling dimensions, as indicated in the table below - executions **B5R, B14R**. Their use in combination with gearboxes must be however coherent with the maximum installable power on gearboxes themselves (see chapters “Motors availability”). In case this condition is not met need to contact the Technical Service for the checking of the combination.

(F 7)

	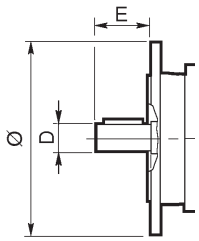					
	BN 71	**BN 80**	**BN 90**	**BN 100**	**BN 112**	**BN 132**
	DxE - Ø					
B5R (1)	11x23 - 140	14x30 - 160	19x40 - 200	24x50 - 200	24x50 - 200	28x60 - 250
B14R (2)	11x23 - 90	14x30 - 105	19x40 - 120	24x50 - 140	—	—

(1) flange with through holes
(2) flange with threaded holes

M3.2 Degree of protection

IP..

The following chart provides an overview of the degrees of protection available.
In addition to the degree of protection specified when ordering, motors to be installed outdoors require protection against direct sunlight and also – when they are to be installed vertically down – a drip cover to prevent the ingress of water and solid particles (option **RC**).

(F 8)

		IP 54	**IP 55**	**IP 56**
BN	**M**	⊖	standard	
BN_FD **BN_FA**	**M_FD** **M_FA**	standard		⊖

M3.3 Cooling

The motors are externally ventilated (IC 411 to CEI EN 60034-6) and are equipped with a plastic fan working in both directions.
The motors must be installed allowing sufficient space between fan cowl and the nearest wall to ensure free air intake and allow access for maintenance purposes on motor and brake, if supplied.
Independent, forced air ventilation (IC 416) can be supplied on request (option U1).
This solution enables to increase
the motor duty factor when driven by an inverter and operating at reduced speed.

M3.4 Direction of rotation

Rotation is possible in both directions. If terminals U1, V1, and W1 are connected to line phases L1,L2 and L3, clockwise rotation (looking from drive end) is obtained. For counterclockwise rotation, switch two phases.

M3.5 Noise

Noise levels, measured using the method prescribed by ISO 1680 Standards, are within the maximum levels specified by Standards CEI EN 60034-9.

M3.6 Vibrations and balancing

Rotor shafts are balanced with half key fitted and fall within the vibration class N, as per Standard CEI EN 60034-14.
If a further reduced noise level is required improved balancing carequired improved balancing can be optionally requested (class B).
Table below shows the value for the vibration velocity for standard (A) and improved (B) balancing.

(F 9)

Vibration class	Angular velocity n [min^{-1}]	Limits of the vibration velocity [mm/s] **BN 56 ≤ H ≤ BN 200** **M05 ≤ H ≤ M5**
A	600 < n < 3600	1.6
B	600 < n < 3600	0.70

Values refer to measures with freely suspended motor in unloaded conditions.

M3.7 Terminal box

Terminal board features 6 studs for eyelet terminal connection (9 studs execution for US voltage “Dual Voltage”).
A ground terminal is also supplied for earthing of the equipment.
Terminals number and type are shown in the following table.
For brake power supply, please read par. M6 (brake FD), M7 (brake FA).
Brakemotors house the a.c./d.c. rectifier (factory pre-wired) inside the terminal box.
Wiring instructions are provided either in the box or in the user manual.

(F 10)

		No. of terminals	Terminal threads	Wire max cross section area mm^2
BN 56 ... BN 71	**M05, M1**	6	M4	2.5
BN 80, BN 90	**M2**	6	M4	2.5
BN 100 ... BN 112	**M3**	6	M5	6
BN 132 ... BN 160MR	**M4**	6	M5	6
BN 160M ... BN 180M	**M5**	6	M6	16
BN 180L ... BN 200L	**–**	6	M8	25
BN 63 ... BN 160MR	**M05 ... M4**	9	M4	6
BN 160M ... BN 200L	**M5**	9	M6	16

M3.8 Cable entry

The holes used to bring cables to terminal boxes use metric threads in accordance with standard EN 50262 as indicated in the table here after.

(F 11)

		Cable entry	Max. cable diameter allowed [mm]
BN 63	**M05**	2 x M20 x 1.5	13
BN 71	**M1**	2 x M25 x 1.5	17
BN 80 - BN 90	**M2**	2 x M25 x 1.5	17
BN 100	**M3**	2 x M32 x 1.5	21
		2 x M25 x 1.5	17
BN 112	**—**	2 x M32 x 1.5	21
		2 x M25 x 1.5	17
BN 132...BN 160MR	**M4**	4 x M32 x 1.5	21
BN 160M...BN 200L	**M5**	2 x M40 x 1.5	28

M3.9 Bearings

Life lubricated preloaded radial ball bearings are used, types are shown in the chart here under.
Calculated endurance lifetime L_{10h}, as per ISO 281, in unloaded condition, exceeds 40000 hrs.
DE = drive end
NDE = non drive end

(F 12)

	DE	**NDE**	
	M, M_FD, M_FA	**M**	**M_FD, M_FA**
M05	6004 2Z C3	6201 2Z C3	6201 2RS C3
M1	6004 2Z C3	6202 2Z C3	6202 2RS C3
M2	6007 2Z C3	6204 2Z C3	6204 2RS C3
M3	6207 2Z C3	6206 2Z C3	6206 2RS C3
M4	6309 2Z C3	6308 2Z C3	6308 2RS C3
M5	6309 2Z C3	6309 2Z C3	6309 2RS C3

(F 13)

	DE	NDE	
	BN	BN	BN_FD BN_FA
BN 56	6201 2Z C3	6201 2Z C3	–
BN 63	6201 2Z C3	6201 2Z C3	6201 2RS C3
BN 71	6202 2Z C3	6202 2Z C3	6202 2RS C3
BN 80	6204 2Z C3	6204 2Z C3	6204 2RS C3
BN 90	6205 2Z C3	6205 2Z C3	6305 2RS C3
BN 100	6206 2Z C3	6206 2Z C3	6206 2RS C3
BN 112	6306 2Z C3	6306 2Z C3	6306 2RS C3
BN 132	6308 2Z C3	6308 2Z C3	6308 2RS C3
BN 160MR	6309 2Z C3	6308 2Z C3	6308 2RS C3
BN 160M/L	6309 2Z C3	6309 2Z C3	6309 2RS C3
BN 180M	6310 2Z C3	6309 2Z C3	6309 2RS C3
BN 180L	6310 2Z C3	6310 2Z C3	6310 2RS C3
BN 200L	6312 2Z C3	6310 2Z C3	6310 2RS C3

M4 ELECTRICAL CHARACTERISTICS

M4.1 Voltage

Single speed motors are provided in standard execution either for nominal voltage 230 / 400 V Δ/Y, 50 Hz, or 400 / 690 V Δ/Y, 50 Hz, with a voltage tolerance of ± 10%, according to what is specified on the below table.
On all the motors BN and M, for which the voltage / frequency configuration is not included on the below table, the voltage tolerance is reduced down to ± 5%.
For the operation out of the tolerance boundaries, the temperature may exceed by 10 K the limit provided by the adopted insulation class.
The motors are suitable for operation on distribution European grid with voltage complying with the pubblication IEC 60038.

(F 14)

			V_{mot} ± 10 % 3 ~	**Configuation**
IE1	**BN 56 … BN 132**	**M0 … M4**	230 / 400 V - Δ/Y - 50 Hz	Standard
			400 / 690 V - Δ/Y - 50 Hz	On request at no extra charge
			460 V Y - 60 Hz	Standard
	BN 160 … 200	**M5**	400 / 690 V - Δ/Y - 50 Hz	Standard
			460 V Δ - 60 Hz	Standard

[1] 4 pole motor only

The only rated voltage for motors type 50Hz and all double speed motors is 400V.
Applicable tolerances as per CEI EN 60034-1.

The table below shows the wiring options available.

(F 15)

Pole		Wiring options
2	**BN 63 … BN 200**	Δ / Y (²)
4	**BN 56 … BN 200**	
6	**BN 63 … BN 200**	
8	**BN 71 … BN 132**	
2/4	**BN 63 … BN 132**	Δ / YY (Dahlander)
2/6	**BN 71 … BN 132**	Y / Y (Two windings)
2/8	**BN 71 … BN 132**	
2/12	**BN 80 … BN 132**	
4/6	**BN 71 … BN 132**	
4/8	**BN 80 … BN 132**	Δ / YY (Dahlander)

(²) Motors with voltage in ratio 2 (ex. 230/460 - 60) will be equipped with a 9 pin terminal box with winding connection either Δ Δ/ Δ or YY / Y (except 6 pole BN 63 Δ / Y)

M4.2 Frequency

Rated output power BN / M for 60 Hz operation is shown in the following diagram.

(F 16)

		P_n [kW]			
		2P	**4P**	**6P**	**8P (*)**
BN 56A	**–**	–	0.07	–	–
BN 56B	**M0B**	–	0.1	–	–
BN 63A	**M05A**	0.21	0.14	0.1	–
BN 63B	**M05B**	0.3	0.21	0.14	–
BN 63C	**M05C**	0.45	0.3	–	–
BN 71A	**–**	0.45	0.3	0.21	0.1
–	**M1SC**	–	–	0.21	–
BN 71B	**M05SD**	0.65	0.45	0.3	0.14
BN 71C	**M1LA**	0.9	0.65	0.45	–
BN 80A	**–**	0.9	0.65	0.45	0.21
BN 80B	**M2SA**	1.3	0.9	0.65	0.30
BN 80C	**M2SB**	1.8	1.3	0.9	–
BN 90S	**–**	–	1.3	0.9	0.45
BN 90SA		1.8	–	–	–
BN 90SB		2.2	–	–	–
BN 90L	**M3SA**	2.5	–	1.3	0.65
BN 90LA		–	1.8	–	–
BN 90LB	**–**	–	2.2	–	–

		P_n [kW]			
		2P	**4P**	**6P**	**8P (*)**
BN 100L	**M3LA**	3.5	–	–	–
BN 100LA		–	2.5	1.8	0.9
BN 100LB	**M3LB**	4.7	3.5	2.2	1.3
BN 112M	**–**	4.7	4.7	2.5	1.8
–	**M3LC**	–	4.7	2.5	–
BN 132S	**M4SA**	–	6.5	3.5	2.5
BN 132SA		6.5	–	–	–
BN 132SB	**M4SB**	8.7	–	–	–
BN 132M	**M4LA**	11	–	–	3.5
BN 132MA		–	8.7	4.6	–
BN 132MB	**M4LB**	–	11	6.5	–
BN 160MR	**M4LC**	12.5	12.5	–	–
BN 160M	**M5SA**	–	–	8.6	–
BN 160MB	**–**	17.5	–	–	–
–	**M5SB**	17.5	17.5	–	–
BN 160L	**–**	21.5	17.5	12.6	–
–	**M5SC**	21.5	–	–	–
BN 180M	**M5LA**	24.5	21.5	–	–
BN 180L	**–**	–	25.3	17.5	–
BN 200L	**–**	–	34	–	–
BN 200LA	**–**	34	–	22	–

(*) Excluded M_ motors

Double speed BN / M motors supplied at 60 Hz will have an increase of nominal power, referred to 50 Hz, equal to 15%. If a nominal power rating, equal to the normalised nominal power rating at 50 Hz, was requested to be on a nameplate of a motor meant to be voltage supplied at 60 Hz, the PN option shall be specified on the motor designation. Motors normally designed for a 50 Hz frequency may be used on a 60 Hz operating grid, but the related data shall be updated according to the following table.

Motors designated for 50 Hz operation show on the nameplate also the values for 60 Hz operation (excluding motors in CUS execution and brake motors). See the following table.

(F 17)

50 Hz	**60 Hz**			
V - 50 Hz	**V** - 60 Hz	**Pn** - 60 Hz	M_n, M_a/M_n - 60 Hz	**n** [min-1] - 60 Hz
230/400 Δ/Y	220 - 240 Δ	1	0.83	1.2
	380 - 415 Y			
400/690 Δ/Y	380 - 415 Δ			
230/400 Δ/Y	265 - 280 Δ	1.15	1	1.2
	440 - 480 Y			
400/690 Δ/Y	440 - 480 Δ			

M4.3 Ambient temperature

Catalogue rating values are calculated for 50 Hz operation and for standard ambient conditions (temperature 40 °C; elevation <1000 m a.s.l.) as per the CEI EN 60034-1 Standards.
The motors can be used within the 40 - 60 °C temperature range with rated power output adjusted by factors given in the following charts.

(F 18)

Ambient temperature (°C)	40°	45°	50°	55°	60°
Permitted power as a % of rated power	100%	95%	90%	85%	80%

Should a derating factor higher than 15% apply please consult factory.

M4.4 Insulation class

CL F

Bonfiglioli motors use class **F** insulating materials (enamelled wire, insulators, impregnation resins) as compare to the standard motor.

CL H

Motors manufactured in insulation class **H** are available at request.
In standard motors, stator windings over temperature normally stays below the 80 K limit corresponding to class B over temperature.
A careful selection of insulating components makes the motors compatible with tropical climates and normal vibration.
For applications involving the presence of aggressive chemicals or high humidity, contact Bonfiglioli Engineering for assistance with product selection.
Not available for motors in compliance with CSA e UL standards (CUS option).

(F 19)

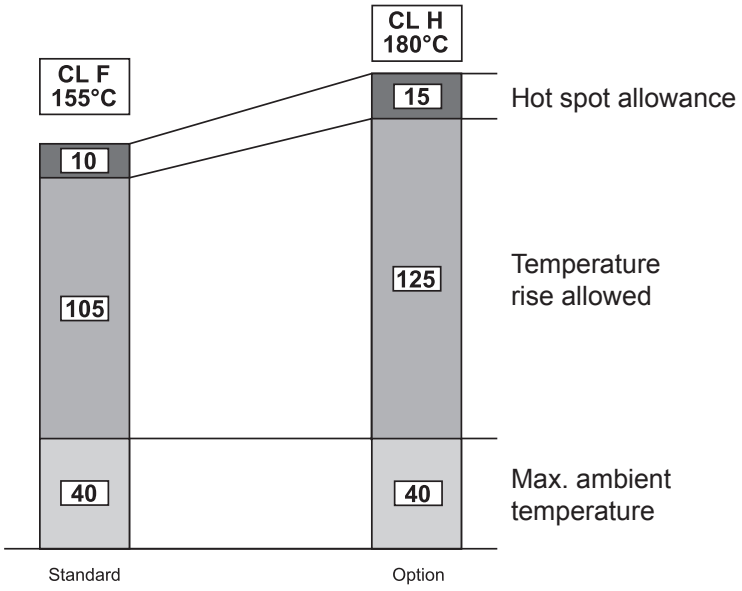

M4.5 Type of duty

Unless otherwise specified, catalogue motor power refers to continuous duty S1.
Any operating conditions other than S1 duty must be identified in accordance with duty cycle definitions laid down in standards CEI EN 60034-1.
For duty cycles S2 and S3, the power increase co-efficient reported in the following table may be used. Please note that the table provided below applies to single-speed motors.
As an alternative to S1 continuous duty, one of the following values can be specified at the product configuration stage: S2, S3 or S9. The motor nameplate will be marked with an increased power rating to suit the type of duty, and with specific electrical data and a duty type of S2-30 min, S3-70% or S9 respectively.
For further details, contact Bonfiglioli's Technical Service.
Please contact Bonfiglioli Engineering for the power increase coefficients applicable to switch-pole motors.

(F 20)

	Duty						
	S2			**S3 ***			**S4 - S9**
	Cycle duration (min)			Cyclic duration factor (I)			Consult factory
	10	**30 (*)**	**60**	**25%**	**40%**	**70% (*)**	
f_m	1.35	1.15	1.05	1.25	1.15	1.1	

* Cycle duration must, in any event, be equal to or less than 10 minutes; if this time is exceeded, please contact our Technical Service.
(*) Default values from options.

M4.5.1 Cyclic duration factor:

$$I = \frac{t_f}{t_f + t_r} \cdot 100 \qquad (23)$$

t_f = work time under constant load
t_r = rest time

M4.5.2 Limited duration duty S2

This type of duty is characterized by operation at constant load for a limited time, which is shorter than the time required to reach thermal equilibrium, followed by a rest period of sufficient duration to restore ambient temperature in the motor.

M4.5.3 Periodical intermittent duty S3:

This type of duty is characterized by a sequence of identical operation cycles, each including a constant load operation period and a rest period.
For this type of duty, the starting current does not significantly influence overtemperature.

M4.6 Inverter-controlled motors

The electric motors of series BN and M may be used in combination with PWM inverters with rated voltage at transformer input up to 500 V.Standard motors use a phase insulating system with separators, class 2 enamelled wire and class H impregnation resins (1600V peak-to-peak voltage pulse capacity and rise edge t_s > 0.1μs at motor terminals). Typical torque/speed curves referred to S1 duty for motors with base frequency fb = 50 Hz is are reported in the table below.
Because ventilation is somewhat impaired in operation at lower frequencies (about 30 Hz), standard motors with incorporated fan (IC411) require adequate torque derating or - alternately - the addition of a separate supply fan cooling.
Above base frequency, upon reaching the maximum output voltage of the inverter, the motor enters a steady-power field of operation, and shaft torque drops with ratio (f/f_b).
As motor maximum torque decreases with $(f/f_b)^2$, the allowed overloading must be reduced progressively.

Bonfiglioli Riduttori

(F 21)

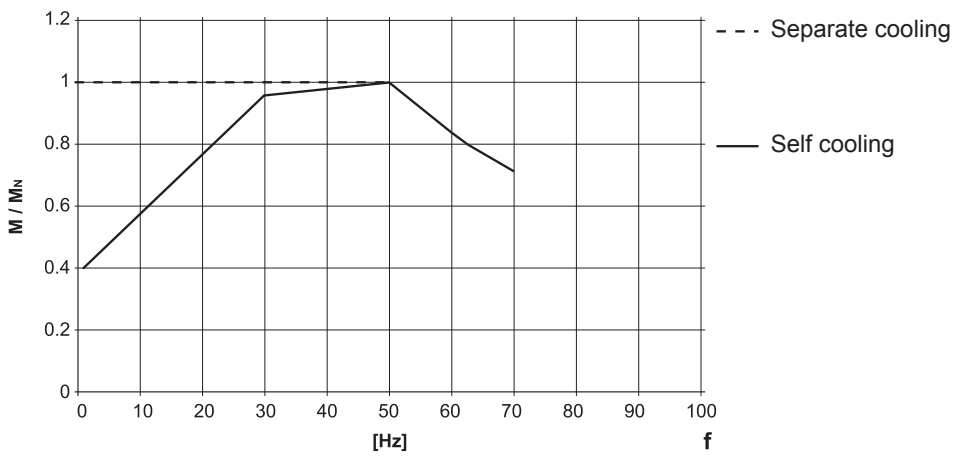

The following table reports the mechanical speed limit for motors operating above rated frequency:

(F 22)

		n [min^{-1}]		
		2p	**4p**	**6p**
≤ BN 112	**M05…M3**	5200	4000	3000
≥ BN 132	**M4, M5**	4500	4000	3000

Above rated speed, motors generate increased mechanical vibration and fan noise. Class B rotor balancing is highly recommended in these applications. Installing a separate supply fan cooling may also be advisable.

Remote-controlled fan and brake (if fitted) must always be connected direct to mains power supply.

M4.7 Permissible starts per hour, Z

The rating charts of brakemotors lend the permitted number of starts Z_0, based on 50% intermittence and for unloaded operation.
The catalogue value represents the maximum number of starts per hour for the motor without exceeding the rated temperature for the insulation class F.
To give a practical example for an application characterized by inertia J_c, drawing power P_r and requiring mean torque at start-up M_L the actual number of starts per hour for the motor can be calculated approximately through the following equation:

$$Z = \frac{Z_0 \cdot K_c \cdot K_d}{K_J} \qquad (24)$$

where:

$K_J = \frac{J_m + J_c}{J_m}$	inertia factor
$K_c = \frac{M_a - M_L}{M_a}$	torque factor
$K_d =$	load factor see table (F23)

(F 23)

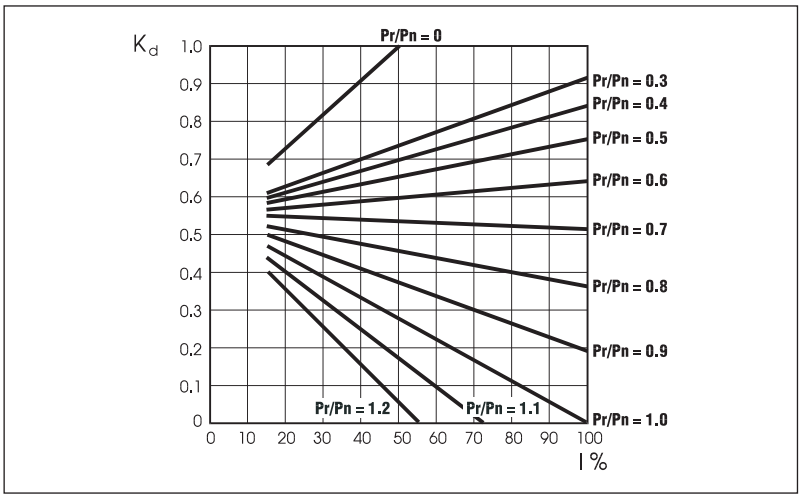

If actual starts per hour is within permitted value (Z) it may be worth checking that braking work is compatible with brake (thermal) capacity W_{max} also given in tables (F30), (F38) and dependent on the number of switches (c/h).

M5 ASYNCHRONOUS BRAKE MOTORS

M5.1 Operation

Versions with incorporated brake use spring-applied DC (FD option) or AC (FA options) brakes.
All brakes are designed to provide fail-safe operation, meaning that they are applied by spring-action in the event of power failure.

(F 24)

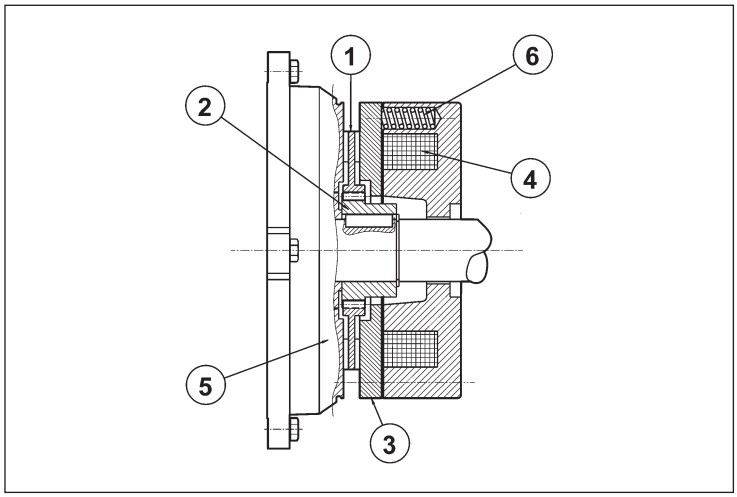

Key:
① brake disc
② disc carrier
③ pressure plate
④ brake coil
⑤ motor rear shield
⑥ brake springs

When voltage is interrupted, pressure springs push the armature plate against the brake disc. The disc becomes trapped between the armature plate and motor shield and stops the shaft from rotation. When the coil is energized, a magnetic field strong enough to overcome spring action attracts the armature plate, so that the brake disc – which is integral with the motor shaft – is released.

M5.2 Most significant features

- High braking torques (normally $M_b \approx 2$ Mn), braking torque adjustment.
- Steel brake disc with double friction lining (low-wear, asbestos-free lining).
- Hexagonal seat on motor shaft fan end (N.D.E.) for manual rotation (not compatible with options PS, RC, TC, U1, U2, EN1, EN2, EN3, EN4, EN5, EN6).
- Manual release lever (options **R** and **RM** for BN/M_FD; option **R** for BN/M_FA).
- Corrosion-proof treatment on all brake surfaces.
- Insulation class F.

M6 DC BRAKE MOTORS TYPE BN_FD and M_FD

Frame sizes: BN 63 … BN 200L / M05 ... M5

(F 25)

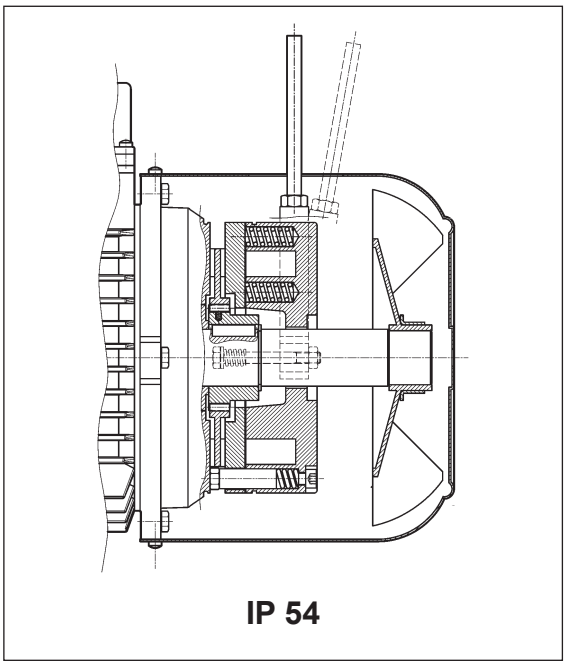

IP 54

(F 26)

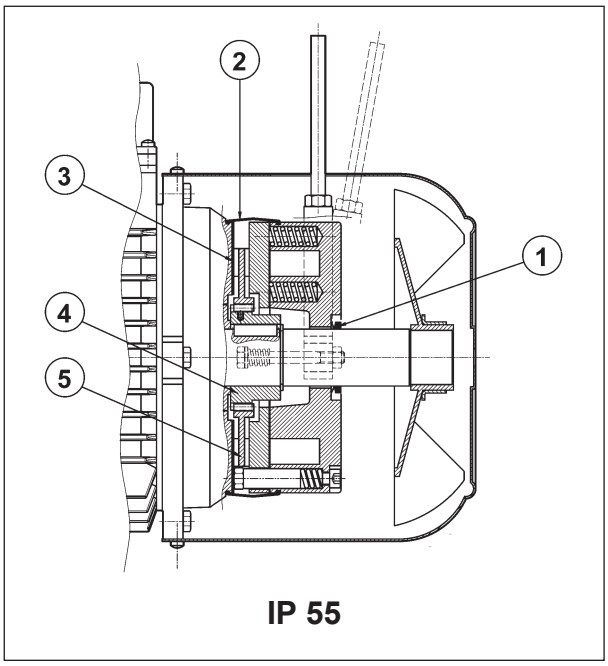

IP 55

Direct current toroidal-coil electromagnetic brake bolted onto motor shield. Preloading springs provide axial positioning of magnet body.
Brake disc slides axially on steel hub shrunk onto motor shaft with anti-vibration device.
Brake torque factory setting is indicated in the corresponding motor rating charts. Braking torque may be modified by changing the type and/or number of springs.
At request, motors may be equipped with manual release lever with automatic return (**R**) or system for holding brake in the released position (**RM**).
See variant at paragraph “BRAKE RELEASE SYSTEMS” for available release lever locations.
FD brakes ensure excellent dynamic performance with low noise. DC brake operating characteristics may be optimized to meet application requirements by choosing from the various rectifier/power supply and wiring connection options available.
For applications involving lifting and/or high hourly energy dissipation, contact Bonfiglioli’s Technical Service.

M6.1 Degree of protection

Standard protection class is IP54.
Brake motor FD is also available in protection class **IP55**, which mandates the following variants:

① V-ring at N.D.E. of motor shaft
② dust and water-proof rubber boot
③ stainless steel ring placed between motor shieldand brake disc
④ stainless steel hub
⑤ stainless steel brake disc

M6.2 FD brake power supply

A rectifier accommodated inside the terminal box feeds the DC brake coil. Wiring connection across rectifier and brake coil is performed at the factory.
On all single-pole motors, rectifier is connected to the motor terminal board. Rectifier standard power supply voltage VB is as indicated in the following table, regardless of mains frequency:

(F 27)

2, 4, 6 P					**1 speed**
		BN_FD / M_FD		brake connected to terminal board power supply	separate power supply
		V_{mot} ± 10% 3 ~	V_B ± 10% 1 ~		
BN 63…BN 132	**M05...M4LB**	230/400 V – 50 Hz	230 V	standard	specify **V_B SA** o **V_B SD**
BN 160…BN 200	**M4LC...M5**	400/690 V – 50 Hz	400 V	standard	specify **V_B SA** o **V_B SD**

Switch-pole motors feature a separate power supply line for the brake with rectifier input voltage V_B as indicated in the table below:

(F 28)

2/4, 2/6, 2/8, 2/12, 4/6, 4/8 P					**2 speed**
		BN_FD / M_FD		brake connected to terminal board power supply	separate power supply
		V_{mot} ± 10% 3 ~	V_B ± 10% 1 ~		
BN 63…BN 132	**M05...M4LB**	400 V – 50 Hz	230 V	⊖	specify **V_B SA** o **V_B SD**

The diode half-wave rectifier (VDC ≈ 0,45 x VAC) is available in versions **NB, SB, NBR** e **SBR**, as detailed in the table below:

(F 29)

		brake	**standard**	**at request**
BN 63	**M05**	**FD 02**	**NB** 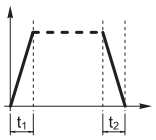	**SB** 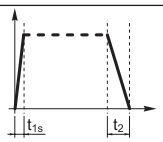
BN 71	**M1**	**FD 03** **FD 53**		
BN 80	**M2**	**FD 04**		**SBR** 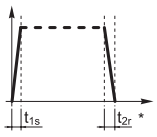
BN 90S	**—**	**FD 14**		
BN 90L	**—**	**FD 05**		**NBR** 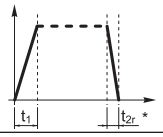
BN 100	**M3**	**FD 15**		
—		**FD 55**	**SB** 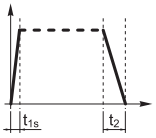	**SBR** 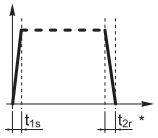
BN 112	**—**	**FD 06S**		
BN 132 - BN 160MR	**M4**	**FD 56** **FD 06** **FD 07**		
BN 160L - BN 180M	**M5**	**FD 08**		
BN 180L - BN 200M	**—**	**FD 09**		

(*) $t_{2c} < t_{2r} < t_2$

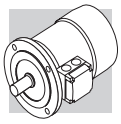

Rectifier **SB** with electronic energizing control over-energizes the electromagnet upon power-up to cut brake release response time and then switches to normal half-wave operation once the brake has been released.

Use of the **SB** rectifier is mandatory in the event of:
- high number of operations per hour
- reduced brake release response time
- brake is exposed to extreme thermal stress

Rectifiers **NBR** or **SBR** are available for applications requiring quick brake intervention (braking condition reinstatement) response.
These rectifiers complement the **NB** and **SB** types as their electronic circuit incorporates a static switch that de-energizes the brake quickly in the event voltage is missing.
This arrangement ensures short brake release response time with no need for additional external wiring and contacts.
Optimum performance of rectifiers **NBR** and **SBR** is achieved with separate brake power supply.
Versions available: 230Vac ±10%, 400Vac ± 10%, 50/60 Hz (with power supply); 100Vdc ±10%, 180Vdc ± 10% (with SD option).

M6.3 FD brake technical specifications

The table below reports the technical specifications of DC brakes FD.

(F 30)

Brake	Brake torque M_b [Nm] springs			Release		Braking		W_{max} per brake operation [J]			W	P
				t_1	t_{1s}	t_2	t_{2c}					
	6	4	2	[ms]	[ms]	[ms]	[ms]	10 s/h	100 s/h	1000 s/h	[MJ]	[W]
FD02	–	3.5	1.75	30	15	80	9	4500	1400	180	15	17
FD03	5	3.5	1.75	50	20	100	12	7000	1900	230	25	24
FD53	7.5	5	2.5	60	30	100	12					
FD04	15	10	5	80	35	140	15	10000	3100	350	30	33
FD14												
FD05	40	26	13	130	65	170	20	18000	4500	500	50	45
FD15	40	26	13	130	65	170	20					
FD55	55	37	18	–	65	170	20					
FD06S	60	40	20	–	80	220	25	20000	4800	550	70	55
FD56	–	75	37	–	90	250	20	29000	7400	800	80	65
FD06		100	50		100	250	20					
FD07	150	100	50	–	120	200	25	40000	9300	1000	130	65
FD08*	250	200	170	–	140	350	30	60000	14000	1500	230	100
FD09**	400	300	200	–	200	450	40	70000	15000	1700	230	120

* brake torque values obtained with 9, 7 and 6 springs, respectively

** brake torque values obtained with 12, 9 and 6 springs, respectively

t_1 = brake release time with half-wave rectifier
t_{1s} = brake release time with over-energizing rectifier
t_2 = brake engagement time with AC line interruption and separate power supply
t_{2c} = brake engagement time with AC and DC line interruption – Values for t1, t1s, t2, t2c indicated in the tab. (F30) are referred to brake set at maximum torque, medium air gap and rated voltage
W_{max} = max energy per brake operation
W = braking energy between two successive air gap adjustments
P_b = brake power absorption at 20 °C
M_b = static braking torque (±15%)
s/h = starts per hour

The brake pad wear depends on the operating/ambient conditions (temperature, humidity, angular speed, specifica pressure); Therefore the declared wear rate must be considered as indicative.

M6.4 FD brake connections

On standard single-pole motors, the rectifier is connected to the motor terminal board at the factory. For switch-pole motors and where a separate brake power supply is required, connection to rectifier must comply with brake voltage VB stated in motor name plate.
Because the load is of the inductive type, brake control and DC line interruption must use contacts from the usage class AC-3 to IEC 60947-4-1.

Table (F31) – Brake power supply from motor terminals and AC line interruption
Delayed stop time t_2 and function of motor time constants.
Mandatory when soft-start/stops are required.
Table (F32) – Brake coil with separate power supply and AC line interruption
Normal stop time independent of motor.
Achieved stop times t_2 are indicated in the table (F30).
Table (F33) – Brake coil power supply from motor terminals and AC/DC line interruption.
Quick stop with operation times t_{2c} as per table (F30).
Table (F34) – Brake coil with separate power supply and AC/DC line interruption.
Stop time decreases by values t_{2c} indicated in the table (F30).

The brake may be voltage supplied directly from the motor terminal box (from tab. F31 to tab. F34) only if the nominal voltage of the brake is the same as the smaller voltage of the motor.

(F 31)

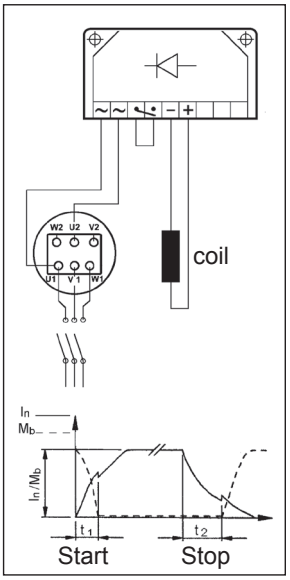

(F 32)

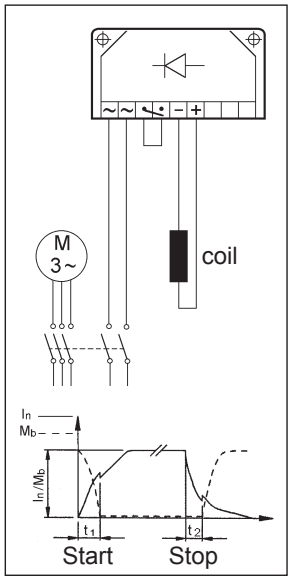

(F 33)

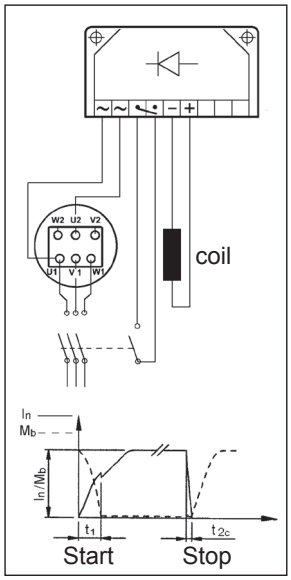

(F 34)

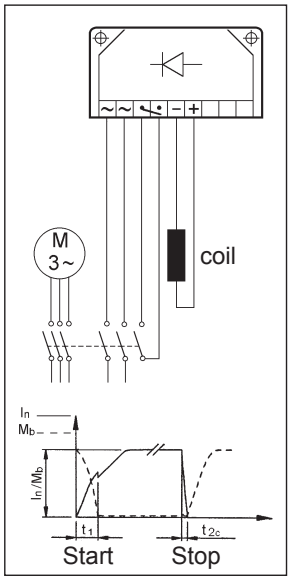

M7 AC BRAKE MOTORS TYPE BN_FA and M_FA

Frame sizes: BN 63 … BN 180M / M05 ... M5

(F 35)

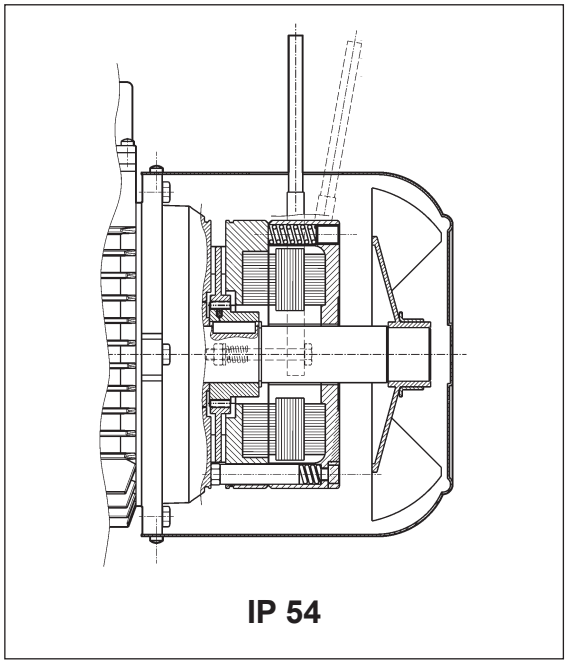

IP 54

(F 36)

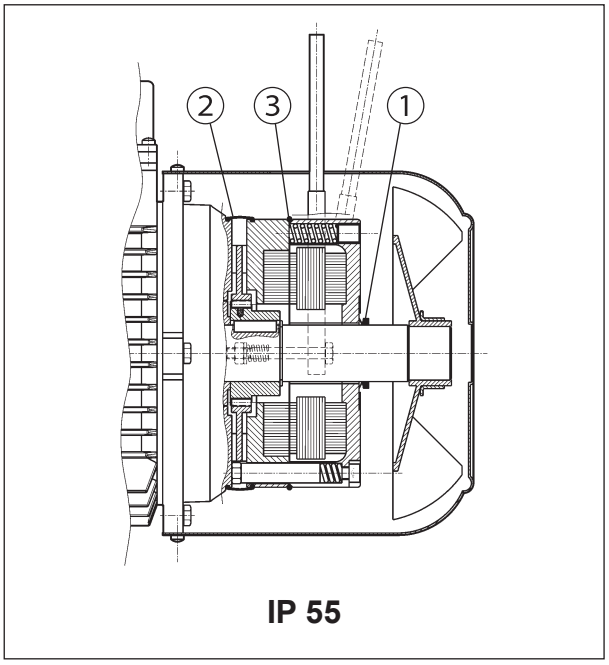

IP 55

Electromagnetic brake operates from three-phase **alternated current** power supply and is bolted onto conveyor shield. Preloading springs provide axial positioning of magnet body.
Steel brake disc slides axially on steel hub shrunk onto motor shaft with anti-vibration device.
Brake torque factory setting is indicated in the corresponding motor rating charts.
Spring preloading screws provide stepless braking torque adjustment.
Torque adjustment range is 30% $M_{bMAX} < M_b < M_{bMAX}$ (where M_{bMAX} is maximum braking torque as shown in tab. (F38).
Thanks to their high dynamic characteristics, FA brakes are ideal for heavy-duty applications as well as applications requiring frequent stop/starts and very fast response time.
Motors may be equipped with manual release lever with automatic return (**R**) at request. See variant at paragraph “BRAKE RELEASE SYSTEMS” for available release lever locations.
For applications involving lifting and/or high hourly energy dissipation, contact Bonfiglioli’s Technical Service.

M7.1 Degree of protection

Standard protection class is IP54.
Brake motor FA is also available in protection class **IP55**, which mandates the following variants:

① V-ring at N.D.E. of motor shaft
② dust and water-proof rubber boot
③ O-ring

M7.2 FA brake power supply

In single speed motors, power supply is brought to the brake coil direct from the motor terminal box. As a result, brake voltage and motor voltage are the same. In this case, brake voltage indication may be omitted in the designation.
Switch-pole motors and motors with separate brake power supply feature an auxiliary terminal board with 6 terminals for connection to brake line. In both cases, brake voltage indication in the designation is mandatory.
The following table reports standard AC brake power supply ratings for single- and switch-pole motors:

(F 37)

	BN 63…BN 132	BN 160…BN 180
single-pole motor	**M05...M4LB**	**M4LC...M5**
	230Δ / 400Y V ±10% – 50 Hz	400Δ/ 690Y V ±10% – 50 Hz
	265Δ / 460Y ±10% - 60 Hz	460Y – 60 Hz

	BN 63…BN 132
switch-pole motors (separate power supply line)	**M05...M4**
	230Δ / 400Y V ±10% – 50 Hz
	460Y - 60 Hz

Unless otherwise specified, standard brake power supply is 230Δ /400Y V - 50 Hz.

Special voltages in the 24…690 V, 50-60 Hz range are available at request.

M7.3 Technical specifications of FA brakes

(F 38)

Brake	Brake torque M_b [Nm]	Release t_1 [ms]	Braking t_2 [ms]	W_{max} [J] 10 s/h	100 s/h	1000 s/h	W [MJ]	P [VA]
FA 02	3.5	4	20	4500	1400	180	15	60
FA 03	7.5	4	40	7000	1900	230	25	80
FA 04 / **FA 14**	15	6	60	10000	3100	350	30	110
FA 05 / **FA 15**	40	8	90	18000	4500	500	50	250
FA 06S	60	16	120	20000	4800	550	70	470
FA 06	75	16	140	29000	7400	800	80	550
FA 07	150	16	180	40000	9300	1000	130	600
FA 08	250	20	200	60000	14000	1500	230	1200

M_b = max static braking torque (±15%)
t_1 = brake release time
t_2 = brake engagement time
W_{max} = max energy per brake operation (brake thermal capacity)
W = braking energy between two successive air gap adjustments
P_b = power drawn by brake at 20° (50 Hz)
s/h = starts per hour

NOTE
Values t_1 and t_2 in the table refer to a brake set at rated torque, medium air gap and rated voltage.

The brake pad wear depends on the operating/ambient conditions (temperature, humidity, angular speed, specifica pressure); Therefore the declared wear rate must be considered as indicative.

M7.4 FA brake connections

The diagram below shows the wiring when brake is connected directly to same power supply of the motor:

(F 39)

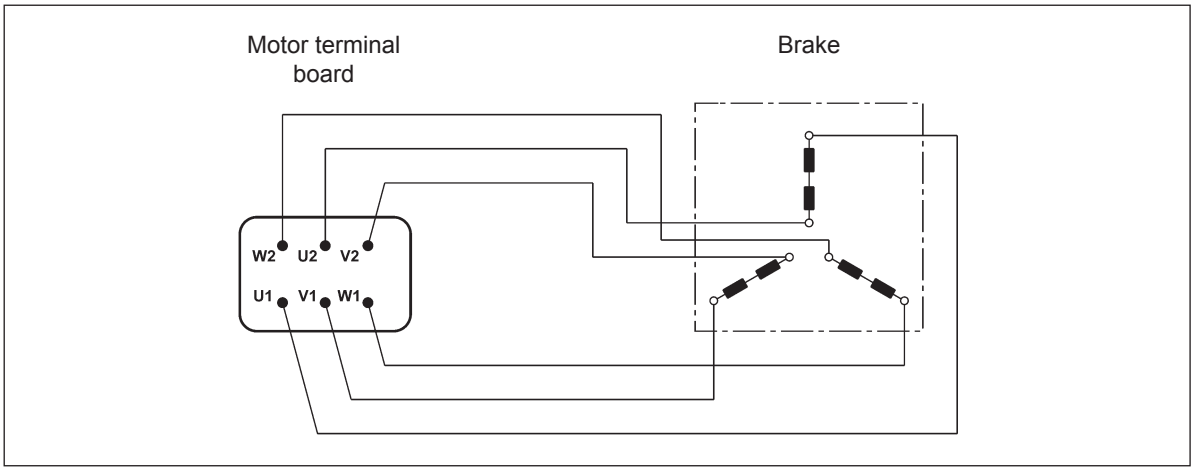

Switch-pole motors and, at request, single-pole motors with separate power supply are equipped with an auxiliary terminal board with 6 terminals for brake connection.
In this version, motors feature a larger terminal box. See diagram below:

(F 40)

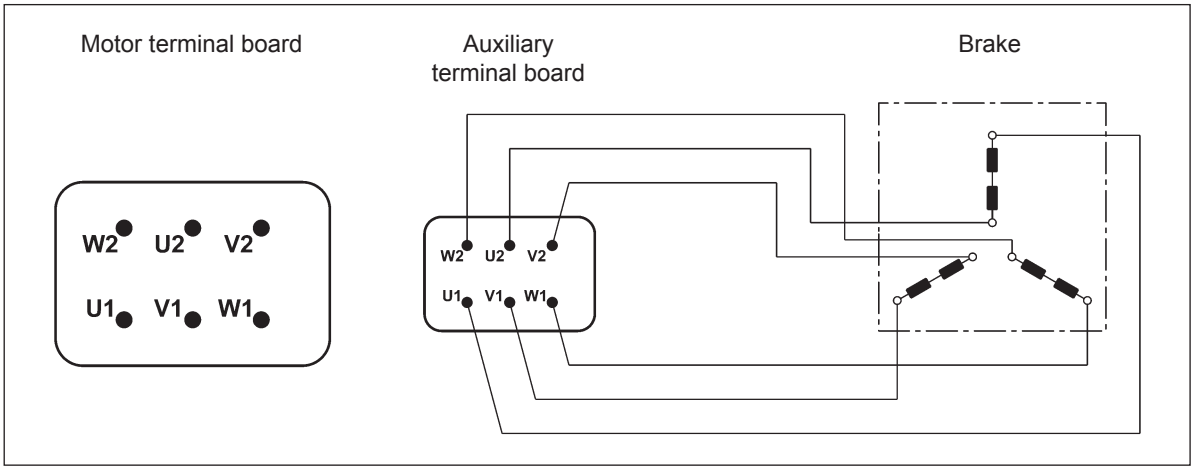

M8 BRAKE RELEASE SYSTEMS

Spring-applied brakes type FD and FA may be equipped with optional manual release devices. These are typically used for manually releasing the brake before servicing any machine or plant parts operated by the motor.

R

(F 41)

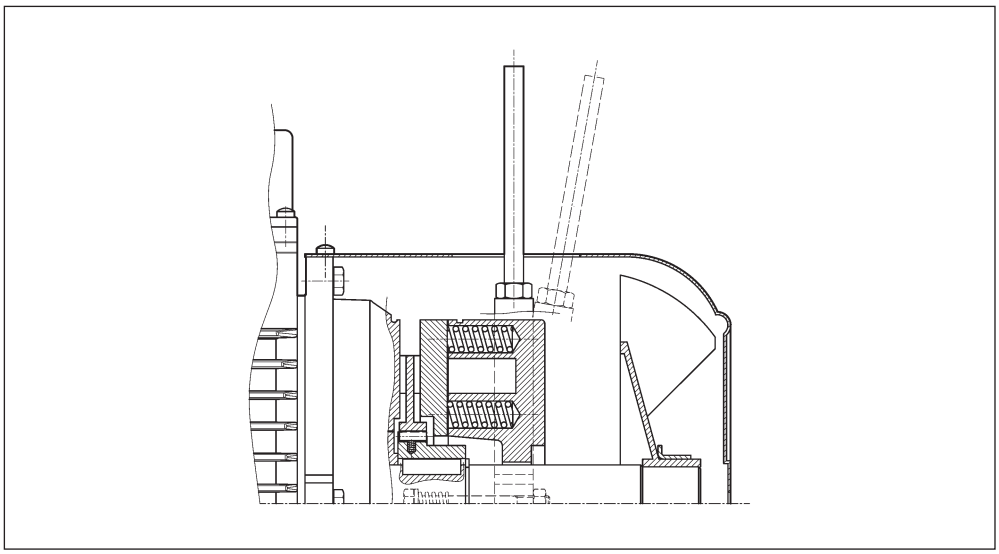

A return spring brings the release lever back in the original position.

RM

(F 42)

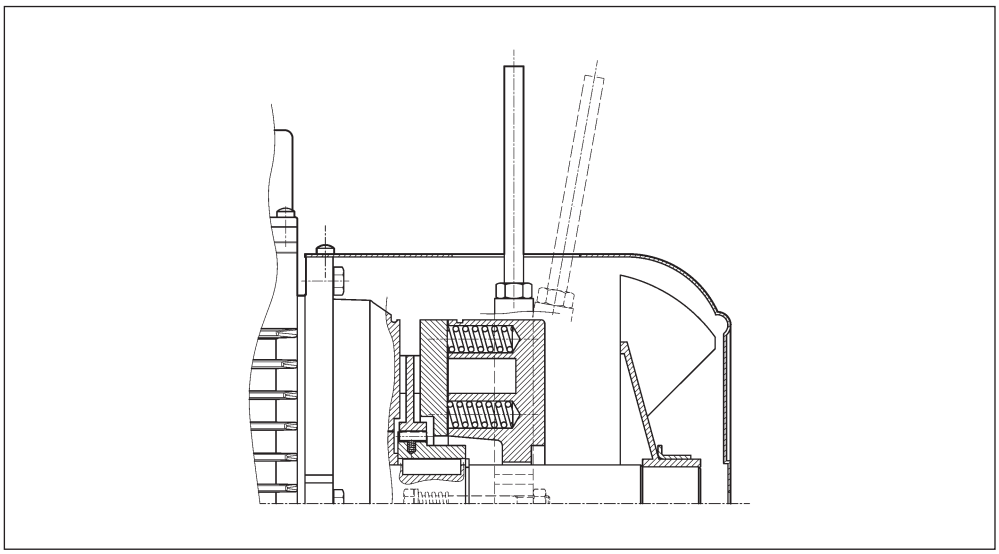

On motors type BN_FD, if the option RM is specified, the release device may be locked in the ”release” position by tightening the lever until its end becomes engaged with a brake housing projection. The availability for the various disengagement devices is charted here below:

(F 43)

	R	RM
BN_FD	**BN 63...BN 200**	**2p 63A2 ≤ H ≤ 132M2** **4p 63A4 ≤ H ≤ 132MA4** **6p 63A6 ≤ H ≤ 132MA6**
M_FD	**M 05...M 5**	**M 05...M 4LA**
BN_FA	**BN 63...BN 180M**	⊖
M_FA	**M 05...M 5**	

M8.1 Release lever orientation

Unless otherwise specified, the release lever is located 90° away from the terminal box – identified by letters [**AB**] in the diagram below – in a clockwise direction on both options **R** and **RM**.
Alternative lever positions [**AA**], [**AC**] and [**AD**] are also possible when the corresponding option is specified:

(F 44)

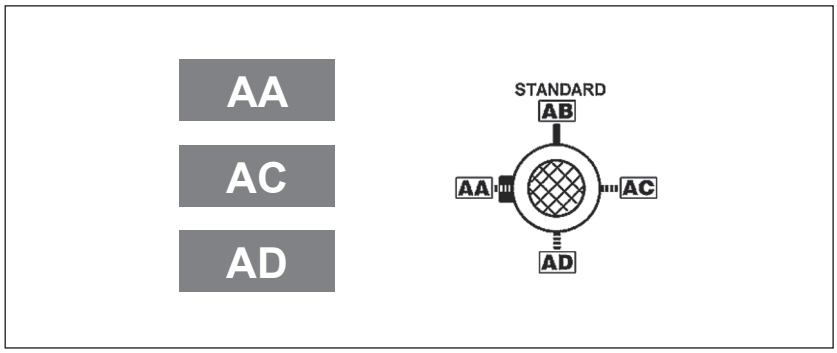

M8.2 Fly-wheel data (F1)

The table below shows values of weight and inertia of flywheel (option F1). Overall dimensions of motors remain unchanged.

(F 45)

Main data for flywheel of motore type: BN_FD, M_FD			
		Fly-wheel weight [Kg]	**Fly-wheel inertia** [Kgm^2]
BN 63	**M05**	0.69	0.00063
BN 71	**M1**	1.13	0.00135
BN 80	**M2**	1.67	0.00270
BN 90 S - BN 90 L	**–**	2.51	0.00530
BN 100	**M3**	3.48	0.00840
BN 112	**–**	4.82	0.01483
BN 132 S - BN 132 M	**M4**	6.19	0.02580

M9 OPTIONS

M9.1 Thermal protective devices

n addition to the standard protection provided by the magneto-thermal device, motors can be supplied with built-in thermal probes to protect the winding against overheating caused, by insufficient ventilation or by an intermittent duty.
This additional protection should always be specified for servoven- tilated motors (IC416).

M9.2 Capacitive filter

CF

An optional capacitive filter is available for DC brake motors type BN_FD only. When the suitable capacitive filter is installed upstream of the rectifier (option CF), motors comply with the emission limits required by standard EN61000-6-3:2007“ Electromagnetic Compatibility – Generic Emission Standard – Part 6-3: Residential, commercial and light industrial environment”.

M9.3 Thermistors

E3

These are semi-conductors having rapid resistance variation when they are close to the rated switch off temperature (150 °C).
Variations of the R = f(T) characteristic are specified under DIN 44081, IEC 34-11 Standards.
Positive temperature coefficient thermistors are normally used (also known as PTC “cold conductor resistors”).
Thermistors cannot control relays directly and must be connected to a suitable disconnect device.
Thus protected, three PTCs connected in series are installed in the winding, the terminals of which are located on the auxiliary terminal-board.

K1

The design characteristics of this sub-group of PTC thermistors allow them to be used as positive temperature coefficient sensors with variable resistance.
Functioning temperature range: 0°C ... +260°C.
Thermistors cannot control relays directly and must be connected to a suitable disconnect device.
Terminals (polarised) for 1 x KTY 84-130 are provided on an auxiliary terminal strip.

M9.4 Bimetallic thermostates

D3

These types of protective devices house a bimetal disk. When the rated switch off temperature (150 °C) is reached, the disk switches the contacts from their initial rest position.
As temperature falls, the disk and the contacts automatically return to rest position.
Three bimetallic thermostates connected in series are usually employed, with normally closed contacts. The terminals are located on an auxiliary terminal-board.

M9.5 Plug connector

CON

Three types of connectors (CON 1, CON 2, CON 3) are provided; they can be mounted in two different positions: right side of terminal box cover (C1D, C2D, C3D); left side of terminal box cover (C1S, C2S, C3S).
The option CON is applicable to single speed BN and M motors (2, 4, 6, 8 poles), and it is not applicable to switch-pole motors. More details about the motor sizes are available in the next table.
The connectors CON 1 / CON 2 are available for BN and M motors without brake and for BN and M brakemotors equipped with DC brake type FD, for the motor sizes listed below.
The male connector (with pins) is mounted on the motor, the female connector is not provided. With CON option, the winding connection is always Y.
With option U1 “forced ventilation”, the fan unit supply is available inside the separate terminal box fixed to fan cover.
With options EN1...EN6, the encoder connection is made by a cable not connected to the motor plug connector.
The CON option is not applicable to brakemotors equipped with AC brake type FA. The CON option is not available when at least one of the next options are selected: the U2, CUS, IC.

Specifications

(F 46)

Option	**CON 1**
Motor size	**BN63…BN112 / M05...M3**
Connector view	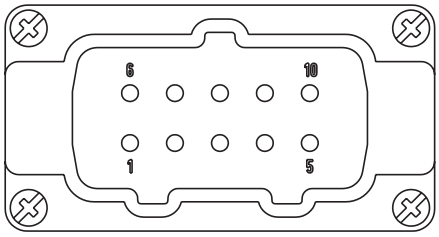
Type of connector	Harting Han 10ES
Housing	Han EMC 10B with 2 levers
Numbers of pins - nominal current	10 x 16A
Voltage	500 Vac
Contact connection	Screw terminals

(F 47)

Option	CON 2
Motor size	**BN63…BN160MR / M05...M4L**
Connector view	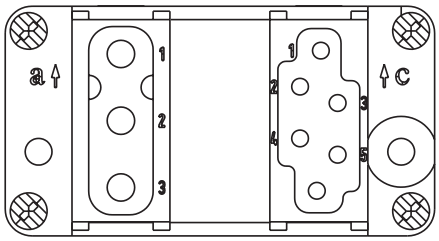
Type of connector	Harting Han Modular
Housing	Han EMC 10B with 2 levers
Module type	Module C + Empty module + Module E
Numbers of pins - nominal current	3 x 36A / 6 x 16A
Voltage	500 Vac
Contact connection	Crimping contacts

(F 48)

Option	CON 3
Motor size	**BN63…BN160M / M05...M4L**
Connector view	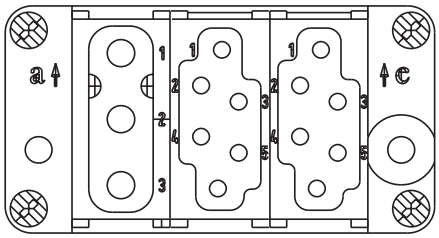
Type of connector	Harting Han Modular
Housing	Han EMC 10B with 2 levers
Module type	Module C + Module E + Module E
Numbers of pins - nominal current	3 x 36A / 6 + 6 x 16A
Voltage	500 Vac
Contact connection	Crimping contacts

(F 49)

Connector orientation
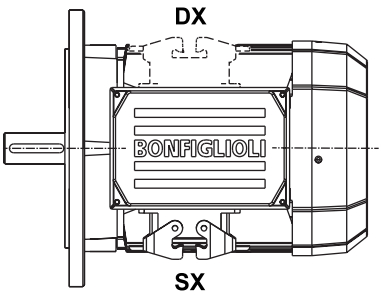

(F 50)

Motors without brake dimensions

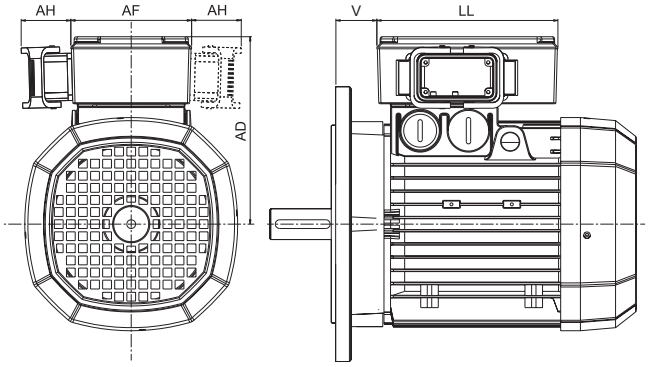

		AD (mm)	**AF** (mm)	**AH** (mm)	**LL** (mm)	**V**(*) (mm)
BN63	**M05**	136	110	45	165	4.5
BN71	**M1**	149	110	45	165	15.5
BN80	**M2**	160	110	45	165	16.5
BN90	**—**	162	110	45	165	31.5
BN100	**M3**	171	110	45	165	37.5
BN112	**—**	186	110	45	165	39
BN132	**M4**	210	140	45	188	45.5
BN160MR	**—**	210	140	45	188	161

(*) Dimension valid only for motors BN.

(F 51)

Motors with FD brake dimensions

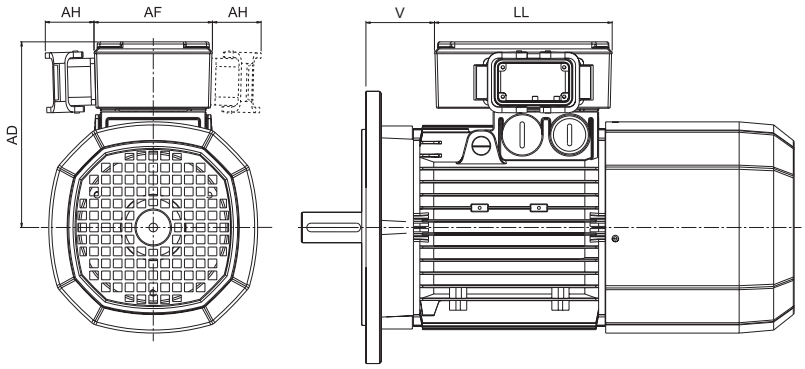

		AD (mm)	**AF** (mm)	**AH** (mm)	**LL** (mm)	**V**(*) (mm)
BN63	**M05**	136	110	45	165	4.5
BN71	**M1**	149	110	45	165	1.5
BN80	**M2**	160	110	45	165	18.5
BN90	**—**	162	110	45	165	39.5
BN100	**M3**	171	110	45	165	63.5
BN112	**—**	186	110	45	165	75
BN132	**M4**	210	140	45	188	122
BN160MR	**—**	210	140	45	188	161

(*) Dimension valid only for motors BN.

M9.6 Control of brake operation

MSW

The microswitch can be set in order to obtain from it a signal related to the attraction/release of anchor plate, or it can be set in order to give feedback when the air gap reaches the maximum value.
MSW option is available for brakes FD03...FD09.
The microswitch is provided with three lead wires (NC, NO, COM). The next figure shown the main components of the brake equipped with microswitch.

(F 52)

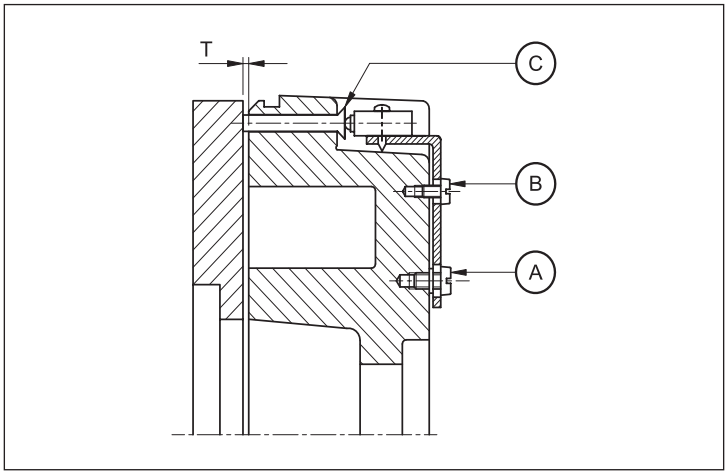

A: Plate fixing screws
B: Setting screws
C: Actuator control pin

M9.7 Additional cable entry for brakemotors

IC

The terminal box cover of brakemotors BN63...BN160MR / M05...M4 is provided with two additional cable entry M16 x 1.5 (one cable entry per side).
The terminal box cover of brakemotors BN160...BN200 / M5 is provided with an additional cable entry M16 x 1.5 next to the cable entry used for the brake.

M9.8 Anti-condensation heaters

H1 **NH1**

Where an application involves high humidity or extreme temperature fluctuation, motors may be equipped with an anti-condensate heater.
A single-phase power supply is available in the auxiliary terminal board inside the main terminal box.
Values for the absorbed power are listed here below:

(F 53)

		H1	NH1
		1~ 230V ± 10% P [W]	1~ 115V ± 10% P [W]
BN 56...BN 80	**M0...M2**	10	10
BN 90...BN 160MR	**M3 - M4**	25	25
BN 160M...BN 180M	**M5**	50	50
BN 180L...BN 200L	**—**		

Warning!
Always remove power supply to the anti-condensante hea- ter before operating the motor.

M9.9 Tropicalization

TP

When option **TP** is specified, motor windings receive additional protection for operation in high humidity and temperature conditions.

M9.10 Second shaft extension

PS

This option is not compatible with variants RC, TC, U1, U2, EN1, EN2, EN3, EN4, EN5, EN6.
For shaft dimensions please see motor dimensions tables.

(F 54)

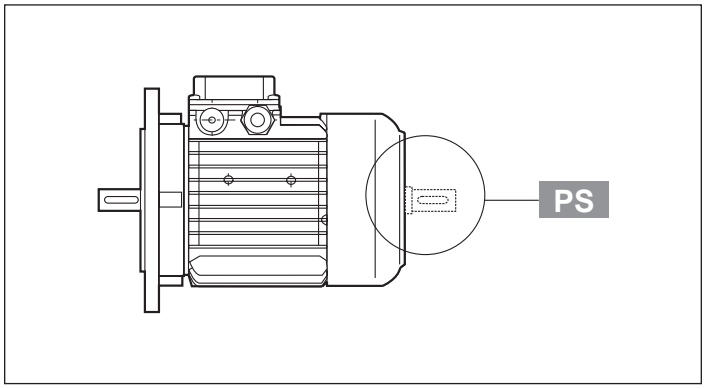

M9.11 Backstop device

AL **AR**

For applications where backdriving must be avoided, motors equipped with an anti run-back device can be used (available for the M series only). While allowing rotation in the direction required, this device operates instantaneously in case of a power failure, preventing the shaft from running back. The anti run-back device is life lubricated with special grease for this specific application. When ordering, customers should indicate the required rotation direction, AL or AR.
Never use the anti run-back device to prevent reverse rotation caused by faulty electrical connection. Table (F55) shows rated and maximum locking torques for the anti run-back devices. A diagram of the device can be seen in Table (F56). Overall dimensis are same as the corresponding brake motor. The direction of free rotation is described in the “MOTOR OPTIONS” section of specifically dedicated sections to gear units.

(F 55)

	Rated locking torque [Nm]	Max. locking torque [Nm]	Release speed [min^{-1}]
M1	6	10	750
M2	16	27	650
M3	54	92	520
M4	110	205	430

(F 56)

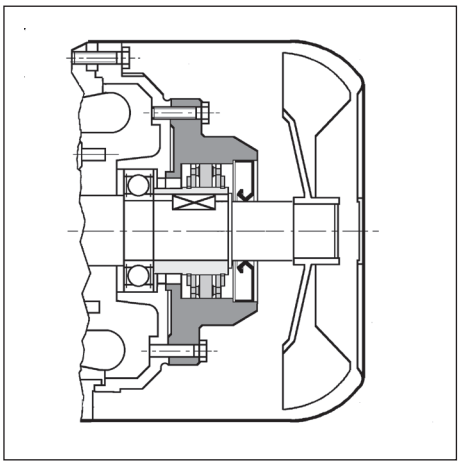

M9.12 Ventilation

Motors are cooled through outer air blow (IC 411 according to CEI EN 60034-6) and are equipped with a plastic radial fan, which operates in both directions.
Ensure that fan cover is installed at a suitable distance from the closest wall so to allow air circulation and servicing of motor and brake, if fitted.
On request, motors can be supplied with independently power-supplied forced ventilation system starting from BN 71 or M1 size.
Motor is cooled by an axial fan with independent power supply and fitted on the fan cover (IC 416 cooling system).
This version is used in case of motor driven by inverter so that steady torque operation is possible even at low speed or when high starting frequencies are needed.
Brake all motors with rear shaft projection (PS option) are excluded.

(F 57)

Power supply					
		V a.c. ± 10%	**Hz**	**P** [W]	**I** [A]
BN 71	**M1**	1~ 230	50 / 60	22	0.12
BN 80	**M2**			22	0.12
BN 90	**—**			40	0.30
BN 100 (*)	**M3**			50	0.25
BN 112	**—**	3~ 230 Δ / 400Y		50	0.26 / 0.15
BN 132S	**M4S**			110	0.38 / 0.22
BN 132M...BN 160MR	**M4L**				
BN 160...BN 180M	**M5**		50	180	1.25 / 0.72

This variant has two different models, called **U1** and **U2**, having the same longitudinal size. Longer side of fan cover (**DL**) is specified for both models in the table below. Overall dimension can be reckoned from motor size table.

(F 58)

Extra length for servoventilated motors			
		Δ L_1	**Δ L_2**
BN 71	**M1**	93	32
BN 80	**M2**	127	55
BN 90	**—**	131	48
BN 100	**M3**	119	28
BN 112	**—**	130	31
BN 132S	**M4S**	161	51
BN 132M	**M4L**	161	51

ΔL_1 = extra length to LB value of corresponding standard motor
ΔL_2 = extra length to LB value of corresponding brake motor

U1

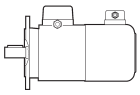

Fan wiring terminals are housed in a separate terminal box.
In brake motors of size BN 71...BN 160MR, M1...M4L, with **U1** model, the release lever cannot be positioned to AA.
The option is not applicable to motors compliant with the CSA and UL norms (option CUS).

U2

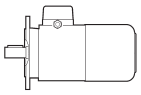

Fan terminals are wired in the motor terminal box.
The **U2** option does not apply to motors BN 160 through BN 200L, M5, with the only exception of motor BN 160MR for which the option is available instead and to motors with option CUS (ompliant to norms CSA and UL).

(F 59)

		V a.c. ±10%	**Hz**	**P** [W]	**I** [A]
BN 71	**M1**	1 ~ 230	50 / 60	22	0.12
BN 80	**M2**			22	0.12
BN 90	**–**			40	0.30
BN 100	**M3**	3 ~ 230Δ / 400Y		40	0.26 / 0.09
BN 112	**–**			50	0.26 / 0.15
BN 132 ... BN 160MR	**M4L**			110	0.38 / 0.22

M9.13 Rain canopy

RC

The rain canopy protects the motor from dripping and avoids the ingress of solid bodies. It is recommended when motor is installed in a vertical position with the shaft downwards.
Relevant dimensions are indicated in the table below.
The drip cover is not compatible with variants PS, EN1, EN2, EN3, EN4, EN5, EN6.

(F 60)

		AQ	ΔV	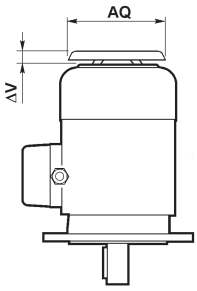
BN 63	**M05**	118	24	
BN 71	**M1**	134	27	
BN 80	**M2**	152	25	
BN 90	**—**	168	30	
BN 100	**M3**	190	28	
BN 112	**—**	211	32	
BN 132...BN 160MR	**M4**	254	32	
BN 160M...BN 180M	**M5**	302	36	
BN 180L...BN 200L	**—**	340	36	

M9.14 Textile canopy

TC

Option TC is a cover variant for textile industry environments, where lint may obstruct the fan grid and prevent a regular flow of cooling air.
This option is not compatible with variants EN1, EN2, EN3, EN4, EN5, EN6.
Overall dimensions are the same as drip cover type RC.

M9.15 Feedback units

Motors may be combined with six different types of encoders to achieve feedback circuits.
Configurations with double-extended shaft (PS) and rain canopy (RC, TC) are not compatible with encoder installation.

EN1

Incremental encoder, V_{IN} = 5 V, line-driver output RS 422.

EN2

Incremental encoder, V_{IN} = 10-30 V, line-driver output RS 422.

EN3

Incremental encoder, V_{IN} = 12-30 V, push-pull output 12-30 V

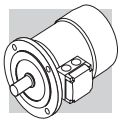

EN4

Encoder sin/cos, V_{IN} = 4.5-5.5 V, output Sinus 0.5V_{PP}.

EN5

Absolute encoder singleturn, HIPERFACE® interface, V_{IN} = 7-12 V.

EN6

Absolute encoder multiturn, HIPERFACE® interface, V_{IN} = 7-12 V.

(F 61)

		EN1	EN2	EN3	EN4	EN5	EN6
Interface		TTL/RS 422	TTL/RS 422	HTL/push-pull	Sinus 0.5 VPP	HIPERFACE®	HIPERFACE®
Power supply voltage	[V]	4...6	10...30	12...30	4.4...5.5	7...12	7...12
Output voltage	[V]	5	5	12...30	—	—	—
No-load operating current	[mA]	120	100	100	40	80	80
No. of pulses per revolution		1024					
Steps per revolution		—	—	—	—	15 bit	15 bit
Revolutions		—	—	—	—	—	12 bit
No. of signals		6 (A, B, Z + inverted signals)			6 (cos-, cos+, sin-, sin+, Z, $\overline{Z}$)	—	—
Max. output frequency	[kHz]	600			200		
Max. speed	[min^{-1}]	6000 (9000 min^{-1} for 10 s)					
Working temperature range	[°C]	-30 ... +100					
Protection class		IP 65					

(F 63)

EN1, EN2, EN3, EN4, EN5, EN6	
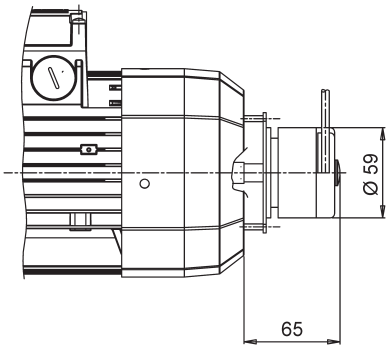	
BN 63...BN 200L	**M05...M5**
BN 63_FD...BN 200L_FD	**M05_FD...M5_FD**
BN 63_FA...BN 200L_FA	**M05_FA...M5_FA**

(F 62)

EN_ + U1		
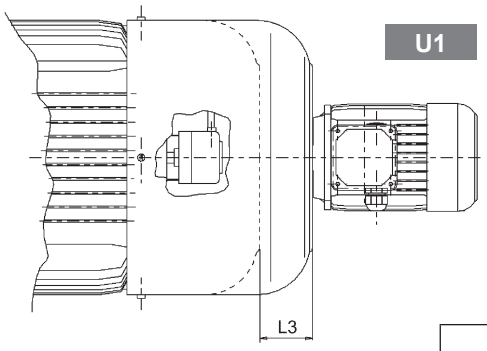		
		L3
BN 160M...BN 180M	**M5**	72
BN 180L...BN 200L	**-**	82
BN 160M_FD...BN 180M_FD	**M5_FD**	35
BN 180L_FD...BN 200L_FD	**-**	41

If the encoder device (option EN_) is specified on motors BN71...BN160MR / M1...M4, along with the independent fan cooling (options U1, U2), the extra length of motor is coincident with that of the correspondent U1 and U2 execution.

M9.16 Surface protection

C_

When no specific protection class is requested, the painted (ferrous) surfaces of motors are protected to at least corrosivity class C2 (UNI EN ISO 12944-2). For improved resistance to atmospheric corrosion, motors can be delivered with C3 and C4 surface protection.

SURFACE PROTECTION	Typical environments	Maximum surface temperature	Corrosivity class according to UNI EN ISO 12944-2
C3	Urban and industrial environments with up to 100% relative humidity (medium air pollution)	120°C	C3
C4	Industrial areas, coastal areas, chemical plant, with up to 100% relative humidity (high air pollution)	120°C	C4

Motors with optional protection to class C3 or C4 are available in a choice of colours. If no specific colour is requested (see the “PAINTING” option) motors are finished in RAL 7042.
Motors can also be supplied with surface protection for corrosivity class C5 according to UNI EN ISO 12944-2. Contact our Technical Service for further details.

M9.17 Painting

RAL_

Gearboxes with optional protection to class C3 or C4 are available in the colours listed in the following table.

PAINTING	Colour	RAL number
RAL7042*	Traffic Grey A	7042
RAL5010	Gentian Blue	5010
RAL9005	Jet Black	9005
RAL9006	White Aluminium	9006
RAL9010	Pure White	9010

* Gearboxes are supplied in this standard colour if no other colour is specified.

NOTE – “PAINTING” options can only be specified in conjunction with “SURFACE PROTECTION” options.

M9.18 Certificates

ACM

Certificate of compliance of motors
The document certifies the compliance of the product with the purchase order and the construction in conformity with the applicable procedures of the Bonfiglioli Quality System.

CC

Inspection certificate
The document entails checking on order compliance, the visual inspection of external conditions and instrumental testing of the electrical characteristics in unloaded conditions. Units inspected are sampled within the shipping batch and marked individually.

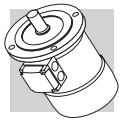

2P — 3000 min^{-1} - S1 — 50 Hz

P_n kW			n min^{-1}	M_n Nm	IE1	η (100%) %	η (75%) %	η (50%) %	cosφ	In 400V A	Is/In	Ms/Mn	Ma/Mn	J_m x 10^{-4} kgm^2	IM B5 Kg	d.c. brake FD Mod	Mb Nm	Z_o 1/h NB	Z_o 1/h SB	J_m x 10^{-4} kgm^2	IM B5 Kg	a.c. brake FA Mod	Mb Nm	Z_o 1/h	J_m x 10^{-4} kgm^2	IM B5 Kg
0.18	BN 63A	2	2730	0.63	○	59.9	56.9	51.9	0.77	0.56	3.0	2.1	2.0	2.0	3.5	FD 02	1.75	3900	4800	2.6	5.2	FA 02	1.75	4800	2.6	5.0
0.25	BN 63B	2	2740	0.87	○	66.0	64.8	64.8	0.76	0.72	3.3	2.3	2.3	2.3	3.9	FD 02	1.75	3900	4800	3.0	5.6	FA 02	1.75	4800	3.0	5.4
0.37	BN 63C	2	2800	1.26	○	69.1	66.8	66.8	0.78	0.99	3.9	2.6	2.6	3.3	5.1	FD 02	3.5	3600	4500	3.9	6.8	FA 02	3.5	4500	3.9	6.6
0.37	BN 71A	2	2820	1.25	○	73.8	73.0	70.6	0.76	0.95	4.8	2.8	2.6	3.5	5.4	FD 03	3.5	3000	4100	4.6	8.1	FA 03	3.5	4200	4.6	7.8
0.55	BN 71B	2	2820	1.86	○	76.0	75.8	74.8	0.76	1.37	5.0	2.9	2.8	4.1	6.2	FD 03	5	2900	4200	5.3	8.9	FA 03	5	4200	5.3	8.6
0.75	BN 71C	2	2810	2.6	○	76.6	76.2	76.2	0.76	1.86	5.1	3.1	2.8	5.0	7.3	FD 03	5	1900	3300	6.1	10.0	FA 03	5	3600	6.1	9.7
0.75	BN 80A	2	2810	2.6	•	76.2	75.5	68.3	0.81	1.75	4.8	2.6	2.2	7.8	8.6	FD 04	5	1700	3200	9.4	12.5	FA 04	5	3200	9.4	12.4
1.1	BN 80B	2	2800	3.8	•	76.4	76.2	75.0	0.81	2.57	4.8	2.8	2.4	9.0	9.5	FD 04	10	1500	3000	10.6	13.4	FA 04	10	3000	10.6	13.3
1.5	BN 80C	2	2800	5.1	•	79.1	79.5	77.2	0.81	3.4	4.9	2.7	2.4	11.4	11.3	FD 04	15	1300	2600	13.0	15.2	FA 04	15	2600	13.0	15.1
1.5	BN 90SA	2	2870	5.0	•	82.0	81.5	78.1	0.80	3.4	5.9	2.7	2.6	12.5	12.3	FD 14	15	900	2200	14.1	16.5	FA 14	15	2200	14.1	16.4
1.85	BN 90SB	2	2880	6.1	•	82.5	82.0	75.4	0.80	4.0	6.2	2.9	2.6	16.7	14	FD 14	15	900	2200	18.3	18.2	FA 14	15	2200	18.3	18.1
2.2	BN 90L	2	2880	7.3	•	82.7	82.1	80.8	0.80	4.8	6.3	2.9	2.7	16.7	14	FD 05	26	900	2200	21	20	FA 05	26	2200	21	20.7
3	BN 100L	2	2860	10.0	•	81.5	81.3	77.4	0.79	6.7	5.6	2.6	2.2	31	20	FD 15	26	700	1600	35	26	FA 15	26	1600	35	27
4	BN 100LB	2	2870	13.3	•	83.1	83.0	77.8	0.80	8.7	5.8	2.7	2.5	39	23	FD 15	40	450	900	43	29	FA 15	40	1000	43	30
4	BN 112M	2	2900	13.2	•	85.5	84.5	83.0	0.82	8.2	6.9	3.0	2.9	57	28	FD 06S	40	—	950	66	39	FA 06S	40	950	66	40
5.5	BN 132SA	2	2890	18.2	•	84.7	84.5	81.2	0.84	11.2	5.9	2.6	2.2	101	35	FD 06	50	—	600	112	48	FA 06	50	600	112	49
7.5	BN 132SB	2	2900	25	•	86.5	86.3	84.4	0.85	14.7	6.4	2.6	2.2	145	42	FD 06	50	—	550	154	55	FA 06	50	550	154	56
9.2	BN 132M	2	2930	30	•	87.0	86.5	83.6	0.86	17.7	6.7	2.8	2.3	178	53	FD 56	75	—	430	189	66	FA 06	75	430	189	67
11	BN 160MR	2	2920	36	•	87.6	87.0	86.0	0.88	20.6	6.9	2.9	2.5	210	65											
15	BN 160MB	2	2930	49	•	89.6	89.4	88.0	0.86	28.1	7.1	2.6	2.3	340	84											
18.5	BN 160L	2	2930	60	•	90.4	90.1	89.0	0.86	34	7.6	2.7	2.3	420	97											
22	BN 180M	2	2930	72	•	89.9	89.7	89.5	0.88	40	7.8	2.6	2.4	490	109											
30	BN 200LA	2	2930	98	•	90.7	90.1	87.6	0.89	54	7.8	2.7	2.9	770	140											

○ = n.a. • = IE1

4P — 1500 min-1 - S1 — 50 Hz

P_n kW			n min-1	M_n Nm	IE1	η (100%) %	η (75%) %	η (50%) %	cosφ	In 400V A	Is/In	Ms/Mn	Ma/Mn	J_m x 10^{-4} kgm²	IM B5 Kg	d.c. brake FD Mod	Mb Nm	Z_o 1/h NB	Z_o 1/h SB	J_m x 10^{-4} kgm²	IM B5 Kg	a.c. brake FA Mod	Mb Nm	Z_o 1/h	J_m x 10^{-4} kgm²	IM B5 Kg
0.06	BN 56A	4	1340	0.43	○	46.8	44.2	41.3	0.65	0.28	2.6	2.3	2.0	1.5	3.1											
0.09	BN 56B	4	1350	0.64	○	51.7	47.6	42.9	0.60	0.42	2.6	2.5	2.4	1.5	3.1											
0.12	BN 63A	4	1350	0.85	○	59.8	56.2	47.0	0.62	0.47	2.6	1.9	1.8	2.0	3.5	FD 02	1.75	10000	13000	2.6	5.2	FA 02	1.75	13000	2.6	5.0
0.18	BN 63B	4	1320	1.30	○	54.8	52.9	52.5	0.67	0.71	2.6	2.2	2.0	2.3	3.9	FD 02	3.5	10000	13000	3.0	5.6	FA 02	3.5	13000	3.0	5.4
0.25	BN 63C	4	1340	1.78	○	65.3	65.0	57.9	0.69	0.80	2.7	2.1	1.9	3.3	5.1	FD 02	3.5	7800	10000	3.9	6.8	FA 02	3.5	10000	3.9	6.6
0.25	BN 71A	4	1380	1.73	○	63.7	62.2	59.1	0.73	0.78	3.3	1.9	1.7	5.8	5.1	FD 03	3.5	7700	11000	6.9	7.8	FA 03	3.5	11000	6.9	7.5
0.37	BN 71B	4	1370	2.6	○	66.8	66.7	63.0	0.76	1.05	3.7	2.0	1.9	6.9	5.9	FD 03	5	6000	9400	8.0	8.6	FA 03	5.0	9400	8.0	8.3
0.55	BN 71C	4	1380	3.8	○	69.0	68.9	68.8	0.74	1.55	4.1	2.3	2.3	9.1	7.3	FD 53	7.5	4300	8700	10.2	10.0	FA 03	7.5	8700	10.2	9.7
0.55	BN 80A	4	1390	3.8	○	72.0	71.3	69.7	0.77	1.43	4.1	2.3	2.0	15	8.2	FD 04	10	4100	8000	16.6	12.1	FA 04	10	8000	16.6	12.0
0.75	BN 80B	4	1400	5.1	•	75.0	74.5	69.3	0.78	1.85	4.9	2.7	2.5	20	9.9	FD 04	15	4100	7800	22	13.8	FA 04	15	7800	22	13.7
1.1	BN 80C	4	1400	7.5	•	75.5	76.2	70.4	0.78	2.7	5.1	2.8	2.5	25	11.3	FD 04	15	2600	5300	27	15.2	FA 04	15	5300	27	15.1
1.1	BN 90S	4	1390	7.6	•	76.5	76.2	72.2	0.77	2.70	4.6	2.6	2.2	21	12.2	FD 14	15	4800	8000	23	16.4	FA 14	15	8000	23	16.3
1.5	BN 90LA	4	1410	10.2	•	78.7	78.5	74.9	0.77	3.6	5.3	2.8	2.4	28	13.6	FD 05	26	3400	6000	32	19.6	FA 05	26	6000	32	20.3
1.85	BN 90LB	4	1390	12.7	•	78.6	78.9	77.2	0.79	4.3	5.1	2.8	2.6	30	15.1	FD 05	26	3200	5900	34	21.1	FA 05	26	5900	34	21.8
2.2	BN 100LA	4	1410	14.9	•	81.1	81.4	79.9	0.75	5.2	4.5	2.2	2.0	40	18	FD 15	40	2600	4700	44	25	FA 15	40	4700	44	25
3	BN 100LB	4	1410	20	•	82.6	83.8	83.7	0.77	6.8	5.0	2.3	2.2	54	22	FD 15	40	2400	4400	58	28	FA 15	40	4400	58	29
4	BN 112M	4	1430	27	•	84.4	84.2	81.6	0.81	8.4	5.6	2.7	2.5	98	30	FD 06S	60	—	1400	107	40	FA 06S	60	2100	107	42
5.5	BN 132S	4	1440	36	•	84.7	84.8	82.5	0.81	11.6	5.5	2.3	2.2	213	44	FD 56	75	—	1050	223	57	FA 06	75	1200	223	58
7.5	BN 132MA	4	1440	50	•	86.0	86.3	85.3	0.81	15.5	5.7	2.5	2.4	270	53	FD 06	100	—	950	280	66	FA 07	100	1000	280	71
9.2	BN 132MB	4	1440	61	•	88.4	88.6	87.5	0.81	18.8	5.9	2.7	2.5	319	59	FD 07	150	—	900	342	75	FA 07	150	900	342	77
11	BN 160MR	4	1440	73	•	87.6	87.8	86.0	0.81	22.4	6.0	2.7	2.5	360	70	FD 07	150	—	850	382	86	FA 07	150	850	382	88
15	BN 160L	4	1460	98	•	88.7	88.5	88.4	0.81	30	6.0	2.3	2.1	650	99	FD 08	200	—	750	725	129	FA 08	200	750	710	128
18.5	BN 180M	4	1460	121	•	89.3	89.5	89.2	0.81	37	6.2	2.6	2.5	790	115	FD 08	250	—	700	865	145	FA 08	250	700	850	144
22	BN 180L	4	1460	144	•	89.9	90.0	90.0	0.80	44	6.4	2.5	2.5	1250	135	FD 09	300	—	400	1450	175					
30	BN 200L	4	1460	196	•	91.4	91.7	91.0	0.80	59	7.1	2.7	2.8	1650	157	FD 09	400	—	300	1850	197					

○ = n.a. • = IE1

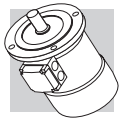

6P — 1000 min^{-1} - S1 — 50 Hz

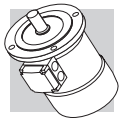

															d.c. brake						a.c. brake				
															FD						FA				
P_n kW		n min^{-1}	M_n Nm	IE1	η (100%) %	η (75%) %	η (50%) %	cosφ	In 400V A	Is/In	Ms/Mn	Ma/Mn	J_m x 10^{-4} kgm^2	IM B5 Kg	Mod	Mb Nm	Z_o 1/h NB	Z_o 1/h SB	J_m x 10^{-4} kgm^2	IM B5 Kg	Mod	Mb Nm	Z_o 1/h	J_m x 10^{-4} kgm^2	IM B5 Kg
0.09	**BN 63A 6**	880	0.98	○	41.0	41.0	32.9	0.53	0.60	2.1	2.1	1.8	3.4	4.6	**FD 02**	3.5	9000	14000	4.0	6.3	**FA 02**	3.5	14000	4.0	6.1
0.12	**BN 63B 6**	870	1.32	○	45.0	44.0	41.8	0.60	0.64	2.1	1.9	1.7	3.7	4.9	**FD 02**	3.5	9000	14000	4.3	6.6	**FA 02**	3.5	14000	4.3	6.4
0.18	**BN 71A 6**	900	1.91	○	55.0	55.5	51.0	0.69	0.68	2.6	1.9	1.7	8.4	5.5	**FD 03**	5	8100	13500	9.5	8.2	**FA 03**	5.0	13500	9.5	7.9
0.25	**BN 71B 6**	900	2.70	○	62.0	58.5	51.4	0.71	0.82	2.6	1.9	1.7	10.9	6.7	**FD 03**	5	7800	13000	12	9.4	**FA 03**	5.0	13000	12	9.1
0.37	**BN 71C 6**	910	3.9	○	66.0	60.0	53.3	0.69	1.17	3.0	2.4	2.0	12.9	7.7	**FD 53**	7.5	5100	9500	14	10.4	**FA 03**	7.5	9500	14	10.1
0.37	**BN 80A 6**	910	3.9	○	68.0	67.4	63.3	0.68	1.15	3.2	2.2	2.0	21	9.9	**FD 04**	10	5200	8500	23	13.8	**FA 04**	10	8500	23	13.7
0.55	**BN 80B 6**	920	5.7	○	70.0	69.8	64.3	0.68	1.67	3.9	2.6	2.2	25	11.3	**FD 04**	15	4800	7200	27	15.2	**FA 04**	15	7200	27	15.1
0.75	**BN 80C 6**	920	7.8	•	70.0	70.0	64.4	0.65	2.38	3.8	2.5	2.2	28	12.2	**FD 04**	15	3400	6400	30	16.1	**FA 04**	15	6400	30	16.0
0.75	**BN 90S 6**	920	7.8	•	70.0	69.0	64.2	0.68	2.27	3.8	2.4	2.2	26	12.6	**FD 14**	15	3400	6500	28	16.8	**FA 14**	15	6500	28	16.7
1.1	**BN 90L 6**	920	11.4	•	72.9	72.6	69.1	0.69	3.2	3.9	2.3	2.0	33	15	**FD 05**	26	2700	5000	37	21	**FA 05**	26	5000	37	22
1.5	**BN 100LA 6**	940	15.2	•	75.2	74.2	70.3	0.72	4.0	4.1	2.1	2.0	82	22	**FD 15**	40	1900	4100	86	28	**FA 15**	40	4100	86	29
1.85	**BN 100LB 6**	930	19.0	•	76.6	72.8	62.6	0.73	4.8	4.6	2.1	2.0	95	24	**FD 15**	40	1700	3600	99	30	**FA 15**	40	3600	99	31
2.2	**BN 112M 6**	940	22	•	78.5	79.0	76.5	0.73	5.5	4.8	2.2	2.0	168	32	**FD 06S**	60	—	2100	177	42	**FA 06S**	60	2100	177	44
3	**BN 132S 6**	940	30	•	79.7	77.0	75.1	0.76	7.1	5.1	1.9	1.8	216	36	**FD 56**	75	—	1400	226	49	**FA 06**	75	1400	226	50
4	**BN 132MA 6**	950	40	•	81.4	81.5	79.5	0.77	9.2	5.5	2.0	1.8	295	45	**FD 06**	100	—	1200	305	58	**FA 07**	100	1200	318	63
5.5	**BN 132MB 6**	945	56	•	83.1	80.9	79.1	0.78	12.2	6.1	2.1	1.9	383	56	**FD 07**	150	—	1050	406	72	**FA 07**	150	1050	406	74
7.5	**BN 160M 6**	955	75	•	85.0	85.0	84.8	0.81	15.7	5.9	2.2	2.0	740	83	**FD 08**	170	—	900	815	112	**FA 08**	170	900	815	113
11	**BN 160L 6**	960	109	•	86.4	86.5	85.9	0.81	22.7	6.6	2.5	2.3	970	103	**FD 08**	200	—	800	1045	133	**FA 08**	200	800	1045	133
15	**BN 180L 6**	970	148	•	87.7	88.0	87.3	0.82	30	6.2	2.0	2.4	1550	130	**FD 09**	300	—	600	1750	170					
18.5	**BN 200LA 6**	960	184	•	88.6	88.0	87.3	0.81	37	5.9	2.0	2.3	1700	145	**FD 09**	400	—	450	1900	185					

○ = n.a. • = IE1

8P — 750 min^{-1} - S1 — 50 Hz

													d.c. brake						a.c. brake				
													FD						FA				
P_n kW			n min^{-1}	M_n Nm	η %	cosφ	In 400V A	Is/In	Ms/Mn	Ma/Mn	J_m x 10^{-4} kgm^2	IM B5 Kg	Mod	Mb Nm	Z_o 1/h NB	Z_o 1/h SB	J_m x 10^{-4} kgm^2	IM B5 Kg	Mod	Mb Nm	Z_o 1/h	J_m x 10^{-4} kgm^2	IM B5 Kg
0.09	**BN 71A**	**8**	680	1.26	47	0.59	0.47	2.3	2.4	2.3	10.9	6.7	**FD 03**	3.5	9000	16000	12.0	9.4	**FA 03**	3.5	16000	12.0	9.1
0.12	**BN 71B**	**8**	680	1.69	51	0.59	0.58	2.1	2.3	2.2	12.9	7.7	**FD 03**	5.0	9000	16000	14.0	10.4	**FA 03**	5.0	16000	14.0	10.1
0.18	**BN 80A**	**8**	690	2.49	51	0.60	0.85	2.4	2.2	2.2	15	8.2	**FD 04**	5.0	6500	11000	16.6	12.1	**FA 04**	5.0	11000	16.6	12.0
0.25	**BN 80B**	**8**	680	3.51	54	0.63	1.06	2.4	2.0	1.9	20	9.9	**FD 04**	10.0	6000	10000	22	13.8	**FA 04**	10.0	10000	23	13.7
0.37	**BN 90S**	**8**	675	5.2	58	0.60	1.53	2.6	2.3	2.1	26	12.6	**FD 14**	15.0	4800	7500	28	16.8	**FA 14**	15.0	7500	28	16.7
0.55	**BN 90L**	**8**	670	7.8	62	0.60	2.13	2.6	2.2	2.0	33	15	**FD 05**	26	4000	6400	37	21	**FA 05**	26	6400	37	22
0.75	**BN 100LA**	**8**	700	10.2	68	0.63	2.53	3.4	1.9	1.7	82	22	**FD 15**	26	2800	4800	86	28	**FA 15**	26	4800	86	29
1.1	**BN 100LB**	**8**	700	15.0	68	0.64	3.65	3.2	1.7	1.7	95	24	**FD 15**	40	2500	4000	99	30	**FA 15**	40	4000	99	31
1.5	**BN 112M**	**8**	710	20.2	71	0.66	4.6	3.7	1.8	1.9	168	32	**FD 06S**	60	—	3000	177	42	**FA 06S**	60	3000	177	44
2.2	**BN 132S**	**8**	710	29.6	75	0.66	6.4	3.8	1.8	2.0	295	45	**FD 56**	75	—	2300	305	58	**FA 06**	75	2300	305	56
3	**BN 132MA**	**8**	710	40.4	76	0.69	8.3	3.9	1.6	1.8	370	53	**FD 06**	100	—	1900	394	69	**FA 07**	100	1900	406	74

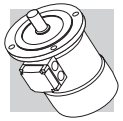

2/4P — 3000/1500 min^{-1} - S1 — 50 Hz

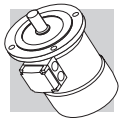

P_n kW			n min^{-1}	M_n Nm	η %	cosφ	In 400V A	Is/In	Ms/Mn	Ma/Mn	J_m x 10^{-4} kgm^2	IM B5 Kg	d.c. brake FD Mod	Mb Nm	Z_o 1/h NB	Z_o 1/h SB	J_m x 10^{-4} kgm^2	IM B5 Kg	a.c. brake FA Mod	Mb Nm	Z_o 1/h	J_m x 10^{-4} kgm^2	IM B5 Kg
0.20	**BN 63B**	**2**	2700	0.71	55	0.82	0.64	3.5	2.1	1.9	2.9	4.4	**FD 02**	3.5	2200	2600	3.5	6.1	**FA 02**	3.5	2600	3.5	5.9
0.15		**4**	1350	1.06	49	0.67	0.66	2.6	1.8	1.7					4000	5100					5100		
0.28	**BN 71A**	**2**	2700	0.99	56	0.82	0.88	2.9	1.9	1.7	4.7	4.4	**FD 03**	3.5	2100	2400	5.8	7.1	**FA 03**	3.5	2400	5.8	6.8
0.20		**4**	1370	1.39	59	0.72	0.68	3.1	1.8	1.7					3800	4800					4800		
0.37	**BN 71B**	**2**	2740	1.29	56	0.82	1.16	3.5	1.8	1.8	5.8	5.1	**FD 03**	5.0	1400	2100	6.9	7.8	**FA 03**	5.0	2100	6.9	7.5
0.25		**4**	1390	1.72	60	0.73	0.82	3.3	2.0	1.9					2900	4200					4200		
0.45	**BN 71C**	**2**	2780	1.55	63	0.85	1.21	3.8	1.8	1.8	6.9	5.9	**FD 03**	5.0	1400	2100	8.0	8.6	**FA 03**	5.0	2100	8.0	8.3
0.30		**4**	1400	2.0	63	0.73	0.94	3.6	2.0	1.9					2900	4200					4200		
0.55	**BN 80A**	**2**	2800	1.9	63	0.85	1.48	3.9	1.7	1.7	15	8.2	**FD 04**	5.0	1600	2300	17	12.1	**FA 04**	5.0	2300	16.6	12.0
0.37		**4**	1400	2.5	67	0.79	1.01	4.1	1.8	1.9					3000	4000					4000		
0.75	**BN 80B**	**2**	2780	2.6	65	0.85	1.96	3.8	1.9	1.8	20	9.9	**FD 04**	10	1400	1600	22	13.8	**FA 04**	10	1600	22	13.7
0.55		**4**	1400	3.8	68	0.81	1.44	3.9	1.7	1.7					2700	3600					3600		
1.1	**BN 90S**	**2**	2790	3.8	71	0.82	2.73	4.7	2.3	2.0	21	12.2	**FD 14**	10	1500	1600	23	16.4	**FA 14**	10	1600	23	16.3
0.75		**4**	1390	5.2	66	0.79	2.08	4.6	2.4	2.2					2300	2800					2800		
1.5	**BN 90L**	**2**	2780	5.2	70	0.85	3.64	4.5	2.4	2.1	28	14.0	**FD 05**	26	1050	1200	32	20	**FA 05**	26	1200	32	21
1.1		**4**	1390	7.6	73	0.81	2.69	4.7	2.5	2.2					1600	2000					2000		
2.2	**BN 100LA**	**2**	2800	7.5	72	0.85	5.2	4.5	2.0	1.9	40	18.3	**FD 15**	26	600	900	44	25	**FA 15**	26	900	44	25
1.5		**4**	1410	10.2	73	0.79	3.8	4.7	2.0	2.0					1300	2300					2300		
3.5	**BN 100LB**	**2**	2850	11.7	80	0.84	7.5	5.4	2.2	2.1	61	25	**FD 15**	40	500	900	65	31	**FA 15**	40	900	65	32
2.5		**4**	1420	16.8	82	0.80	5.5	5.2	2.2	2.2					1000	2100					2100		
4	**BN 112M**	**2**	2880	13.3	79	0.83	8.8	6.1	2.4	2.0	98	30	**FD 06S**	60	—	700	107	40	**FA 06S**	60	700	107	42
3.3		**4**	1420	22.2	80	0.80	7.4	5.1	2.1	2.0					—	1200					1200		
5.5	**BN 132S**	**2**	2890	18.2	80	0.87	11.4	5.9	2.4	2.0	213	44	**FD 56**	75	—	350	223	57	**FA 06**	75	350	223	58
4.4		**4**	1440	29	82	0.84	9.2	5.3	2.2	2.0					—	900					900		
7.5	**BN 132MA**	**2**	2900	25	82	0.87	15.2	6.5	2.4	2.0	270	53	**FD 06**	100	—	350	280	66	**FA 07**	100	350	293	71
6		**4**	1430	40	84	0.85	12.1	5.8	2.3	2.1					—	900					900		
9.2	**BN 132MB**	**2**	2920	30	83	0.86	18.6	6.0	2.6	2.2	319	59	**FD 07**	150	—	300	342	75	**FA 07**	150	300	342	77
7.3		**4**	1440	48	85	0.85	14.6	5.5	2.3	2.1					—	800					800		

2/6P — 3000/1000 min^{-1} - S3 60/40% — 50 Hz

													d.c. brake						a.c. brake				
													FD						FA				
P_n kW			n min^{-1}	M_n Nm	η %	cosφ	In 400V A	Is/In	Ms/Mn	Ma/Mn	J_m x 10^{-4} kgm^2	IM B5 Kg	Mod	Mb Nm	Z_o 1/h NB	Z_o 1/h SB	J_m x 10^{-4} kgm^2	IM B5 Kg	Mod	Mb Nm	Z_o 1/h	J_m x 10^{-4} kgm^2	IM B5 Kg
0.25	**BN 71A**	**2**	2850	0.84	60	0.82	0.73	4.3	1.9	1.8	6.9	5.9	**FD 03**	1.75	1500	1700	8.0	8.6	**FA 03**	2.5	1700	8.0	8.3
0.08		**6**	910	0.84	43	0.70	0.38	2.1	1.4	1.5					10000	13000					13000		
0.37	**BN 71B**	**2**	2880	1.23	62	0.80	1.08	4.4	1.9	1.8	9.1	7.3	**FD 03**	3.5	1000	1300	10.2	10.0	**FA 03**	3.5	1300	10.2	9.7
0.12		**6**	900	1.27	44	0.73	0.54	2.4	1.4	1.5					9000	11000					11000		
0.55	**BN 80A**	**2**	2800	1.88	63	0.86	1.47	4.5	1.9	1.7	20	9.9	**FD 04**	5.0	1500	1800	22	13.8	**FA 04**	5.0	1800	22	13.7
0.18		**6**	930	1.85	52	0.65	0.77	3.3	2.0	1.9					4100	6300					6300		
0.75	**BN 80B**	**2**	2800	2.6	66	0.87	1.89	4.3	1.8	1.6	25	11.3	**FD 04**	5.0	1700	1900	27	15.2	**FA 04**	5.0	1900	27	15.1
0.25		**6**	930	2.6	54	0.67	1.00	3.2	1.7	1.8					3800	6000					6000		
1.10	**BN 90L**	**2**	2860	3.7	67	0.84	2.82	4.7	2.1	1.9	28	14.0	**FD 05**	13	1400	1600	32	20	**FA 05**	13	1600	32	21
0.37		**6**	920	3.8	59	0.71	1.27	3.3	1.6	1.6					3400	5200					5200		
1.5	**BN 100LA**	**2**	2880	5	73	0.84	3.53	5.1	1.9	2.0	40	18.3	**FD 15**	13	1000	1200	44	24	**FA 15**	13	1200	44	25
0.55		**6**	940	5.6	64	0.67	1.85	3.5	1.7	1.8					2900	4000					4000		
2.2	**BN 100LB**	**2**	2900	7.2	77	0.85	4.9	5.9	2.0	2.0	61	25	**FD 15**	26	700	900	65	31	**FA 15**	26	900	65	32
0.75		**6**	950	7.5	67	0.64	2.5	3.3	1.9	1.8					2100	3000					3000		
3	**BN 112M**	**2**	2900	9.9	78	0.87	6.4	6.3	2.0	2.1	98	30	**FD 06S**	40	—	1000	107	40	**FA 06S**	40	1000	107	32
1.1		**6**	950	11.1	72	0.64	3.4	3.9	1.8	1.8					—	2600					2600		
4.5	**BN 132S**	**2**	2910	14.8	78	0.84	9.9	5.8	1.9	1.8	213	44	**FD 56**	37	—	500	223	57	**FA 06**	37	500	223	58
1.5		**6**	960	14.9	74	0.67	4.4	4.2	1.9	2.0					—	2100					2100		
5.5	**BN 132M**	**2**	2920	18.0	78	0.87	11.7	6.2	2.1	1.9	270	53	**FD 56**	50	—	400	280	66	**FA 06**	50	400	280	67
2.2		**6**	960	22	77	0.71	5.8	4.3	2.1	2.0					—	1900					1900		

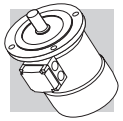

2/8P — 3000/750 min-1 - S3 60/40% — 50 Hz

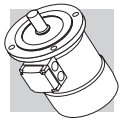

													d.c. brake						a.c. brake				
													FD						FA				
P_n kW			n min-1	M_n Nm	η %	cosφ	In 400V A	Is/In	Ms/Mn	Ma/Mn	J_m x 10^{-4} kgm²	IM B5 Kg	Mod	Mb Nm	Z_o 1/h NB	Z_o 1/h SB	J_m x 10^{-4} kgm²	IM B5 Kg	Mod	Mb Nm	Z_o 1/h	J_m x 10^{-4} kgm²	IM B5 Kg
0.25	**BN 71A**	**2**	2790	0.86	61	0.87	0.68	3.9	1.8	1.9	10.9	6.7	**FD 03**	1.75	1300	1400	12	9.4	**FA 03**	2.5	1400	12	9.1
0.06		**8**	680	0.84	31	0.61	0.46	2.0	1.8	1.9					10000	13000					13000		
0.37	**BN 71B**	**2**	2800	1.26	63	0.86	0.99	3.9	1.8	1.9	12.9	7.7	**FD 03**	3.5	1200	1300	14	10.4	**FA 03**	3.5	1300	14	10.1
0.09		**8**	670	1.28	34	0.75	0.51	1.8	1.4	1.5					9500	13000					13000		
0.55	**BN 80A**	**2**	2830	1.86	66	0.86	1.40	4.4	2.1	2.0	20	9.9	**FD 04**	5.0	1500	1800	22	13.8	**FA 04**	5.0	1800	22	13.7
0.13		**8**	690	1.80	41	0.64	0.72	2.3	1.6	1.7					5600	8000					8000		
0.75	**BN 80B**	**2**	2800	2.6	68	0.88	1.81	4.6	2.1	2.0	25	11.3	**FD 04**	10	1700	1900	27	15.2	**FA 04**	10	1900	27	15.1
0.18		**8**	690	2.5	43	0.66	0.92	2.3	1.6	1.7					4800	7300					7300		
1.10	**BN 90L**	**2**	2830	3.7	63	0.84	3.00	4.5	2.1	1.9	28	14.0	**FD 05**	13	1400	1600	32	20	**FA 05**	13	1600	32	21
0.28		**8**	690	3.9	48	0.63	1.34	2.4	1.8	1.9					3400	5100					5100		
1.5	**BN 100LA**	**2**	2880	5.0	69	0.85	3.69	4.7	1.9	1.8	40	18.3	**FD 15**	13	1000	1200	44	25	**FA 15**	13	1200	44	25
0.37		**8**	690	5.1	46	0.63	1.84	2.1	1.6	1.6					3300	5000					5000		
2.4	**BN 100LB**	**2**	2900	7.9	75	0.82	5.6	5.4	2.1	2.0	61	25	**FD 15**	26	550	700	65	31	**FA 15**	26	700	65	32
0.55		**8**	700	7.5	54	0.58	2.5	2.6	1.8	1.8					2000	3500					3500		
3	**BN 112M**	**2**	2900	9.9	76	0.87	6.5	6.3	2.1	1.9	98	30	**FD 06S**	40	—	900	107	40	**FA 06S**	40	900	107	42
0.75		**8**	690	10.4	60	0.65	2.8	2.5	1.6	1.6					—	2900					2900		
4	**BN 132S**	**2**	2870	13.3	73	0.84	9.4	5.6	2.3	2.4	213	44	**FD 56**	37	—	500	223	57	**FA 06**	37	500	223	58
1		**8**	690	13.8	66	0.62	3.5	2.9	1.9	1.8					—	3500					3500		
5.5	**BN 132M**	**2**	2870	18.3	75	0.84	12.6	6.1	2.4	2.5	270	53	**FD 06**	50	—	400	280	66	**FA 06**	50	400	280	67
1.5		**8**	690	21	68	0.63	5.1	2.9	1.9	1.9					—	2400					2400		

2/12P — 3000/500 min-1 - S3 60/40% — 50 Hz

P_n kW			n min-1	M_n Nm	η %	cosφ	In 400V A	Is/In	Ms/Mn	Ma/Mn	J_m x 10^{-4} kgm²	IM B5 Kg	d.c. brake FD Mod	Mb Nm	Z_o 1/h NB	Z_o 1/h SB	J_m x 10^{-4} kgm²	IM B5 Kg	a.c. brake FA Mod	Mb Nm	Z_o 1/h	J_m x 10^{-4} kgm²	IM B5 Kg
0.55	**BN 80B**	**2**	2820	1.86	64	0.89	1.39	4.2	1.6	1.7	25	11.3	**FD 04**	5.0	1000	1300	27	15.2	**FA 04**	5.0	1300	27	15.1
0.09		**12**	430	2.0	30	0.63	0.69	1.8	1.9	1.8					8000	12000					12000		
0.75	**BN 90L**	**2**	2790	2.6	56	0.89	2.17	4.2	1.8	1.7	26	12.6	**FD 05**	13	1000	1150	30	18.6	**FA 05**	13	1150	30	19.3
0.12		**12**	430	2.7	26	0.63	1.06	1.7	1.4	1.6					4600	6300					6300		
1.10	**BN 100LA**	**2**	2850	3.7	65	0.85	2.87	4.5	1.6	1.8	40	18.3	**FD 15**	13	700	900	44	25	**FA 15**	13	900	44	25
0.18		**12**	430	4.0	26	0.54	1.85	1.5	1.3	1.5					4000	6000					6000		
1.5	**BN 100LB**	**2**	2900	4.9	67	0.86	3.76	5.6	1.9	1.9	54	22	**FD 15**	13	700	900	58	28	**FA 15**	13	900	58	29
0.25		**12**	440	5.4	36	0.46	2.18	1.8	1.7	1.8					3800	5000					5000		
2	**BN 112M**	**2**	2900	6.6	74	0.88	4.43	6.5	2.1	2.0	98	30	**FD 06S**	20	—	800	107	40	**FA 06S**	20	800	107	42
0.3		**12**	460	6.2	46	0.43	2.19	2.0	2.1	2.0					—	3400					3400		
3	**BN 132S**	**2**	2920	9.8	74	0.87	6.7	6.8	2.3	1.9	213	44	**FD 56**	37	—	450	223	57	**FA 06**	37	450	223	58
0.5		**12**	470	10.2	51	0.43	3.3	2.0	1.7	1.6					—	3000					3000		
4	**BN 132M**	**2**	2920	13.1	75	0.89	8.6	5.9	2.4	2.3	270	53	**FD 56**	37	—	400	280	66	**FA 06**	37	400	280	67
0.7		**12**	460	14.5	53	0.44	4.3	1.9	1.7	1.6					—	2800					2800		

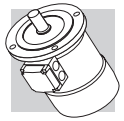

4/6P — 1500/1000 min^{-1} - S1 — 50 Hz

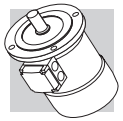

P_n kW			n min^{-1}	M_n Nm	η %	cosφ	In 400V A	Is/In	Ms/Mn	Ma/Mn	J_m x 10^{-4} kgm^2	IM B5 Kg	d.c. brake FD Mod	Mb Nm	Z_o 1/h NB	Z_o 1/h SB	J_m x 10^{-4} kgm^2	IM B5 Kg	a.c. brake FA Mod	Mb Nm	Z_o 1/h	J_m x 10^{-4} kgm^2	IM B5 Kg
0.22	**BN 71B**	**4**	1410	1.5	64	0.74	0.67	3.9	1.8	1.9	9.1	7.3	**FD 03**	3.5	2500	3500	10.2	10.0	**FA 03**	3.5	3500	10.2	9.7
0.13		**6**	920	1.4	43	0.67	0.65	2.3	1.6	1.7					5000	9000					9000		
0.30	**BN 80A**	**4**	1410	2.0	61	0.82	0.87	3.5	1.3	1.5	15	8.2	**FD 04**	5.0	2500	3100	16.6	12.1	**FA 04**	5.0	3100	16.6	12.0
0.20		**6**	930	2.1	54	0.66	0.81	3.2	1.9	2.0					4000	6000					6000		
0.40	**BN 80B**	**4**	1430	2.7	63	0.75	1.22	3.9	1.8	1.8	20	9.9	**FD 04**	10	1800	2300	22	13.8	**FA 04**	10	2300	22	13.7
0.26		**6**	930	2.7	55	0.70	0.97	2.7	1.5	1.6					3600	5500					5500		
0.55	**BN 90S**	**4**	1420	3.7	70	0.78	1.45	4.5	2.0	1.9	21	12.2	**FD 14**	10	1500	2100	23	16.1	**FA 14**	10	2100	23	16.3
0.33		**6**	930	3.4	62	0.70	1.10	3.7	2.3	2.0					2500	4100					4100		
0.75	**BN 90L**	**4**	1420	5.0	74	0.78	1.88	4.3	1.9	1.8	28	14	**FD 05**	13	1400	2000	32	20	**FA 05**	13	2000	32	21
0.45		**6**	920	4.7	66	0.71	1.39	3.3	2.0	1.9					2300	3600					3600		
1.1	**BN 100LA**	**4**	1450	7.2	74	0.79	2.72	5.0	1.7	1.9	82	22	**FD 15**	26	1400	2000	86	28	**FA 15**	26	2000	86	29
0.8		**6**	950	8.0	65	0.69	2.57	4.1	1.9	2.1					2100	3300					3300		
1.5	**BN 100LB**	**4**	1450	9.9	75	0.79	3.65	5.1	1.7	1.9	95	25	**FD 15**	26	1300	1800	99	31	**FA 15**	26	1800	99	32
1.1		**6**	950	11.1	72	0.68	3.24	4.3	2.0	2.1					2000	3000					3000		
2.3	**BN 112M**	**4**	1450	15.2	75	0.78	5.7	5.2	1.8	1.9	168	32	**FD 06S**	40	—	1600	177	42	**FA 06S**	40	1600	177	44
1.5		**6**	960	14.9	73	0.72	4.1	4.9	2.0	2.0					—	2400					2400		
3.1	**BN 132S**	**4**	1460	20	83	0.83	6.5	5.9	2.1	2.0	213	44	**FD 56**	37	—	1200	223	57	**FA 06**	37	1200	223	58
2		**6**	960	20	77	0.75	4.9	4.5	2.1	2.1					—	1900					1900		
4.2	**BN 132MA**	**4**	1460	27	84	0.82	8.8	5.9	2.1	2.2	270	53	**FD 06**	50	—	900	280	66	**FA 06**	50	900	280	67
2.6		**6**	960	26	79	0.72	6.6	4.3	2.0	2.0					—	1500					1500		

4/8P — 1500/750 min^{-1} - S1 — 50 Hz

P_n kW			n min^{-1}	M_n Nm	η %	cosφ	In 400V A	Is/In	Ms/Mn	Ma/Mn	J_m x 10^{-4} kgm^2	IM B5 Kg	d.c. brake FD Mod	Mb Nm	Z_o 1/h NB	Z_o 1/h SB	J_m x 10^{-4} kgm^2	IM B5 Kg	a.c. brake FA Mod	Mb Nm	Z_o 1/h	J_m x 10^{-4} kgm^2	IM B5 Kg
0.37	**BN 80A**	**4**	1400	2.5	63	0.82	1.03	3.3	1.4	1.4	15	8.2	**FD 04**	10	2300	3500	16.6	12.1	**FA 04**	10	3500	16.6	12.0
0.18		**8**	690	2.5	44	0.60	0.98	2.2	1.5	1.6					4500	7000					7000		
0.55	**BN 80B**	**4**	1390	3.8	65	0.86	1.42	3.8	1.7	1.6	20	9.9	**FD 04**	10	2200	2900	22	13.8	**FA 04**	10	2900	22	13.7
0.30		**8**	670	4.3	49	0.65	1.36	2.3	1.7	1.8					4200	6500					6500		
0.65	**BN 90S**	**4**	1390	4.5	73	0.85	1.51	4.0	1.9	1.9	28	13.6	**FD 14**	15	2300	2800	30	17.8	**FA 14**	15	2800	30	17.7
0.35		**8**	690	4.8	49	0.57	1.81	2.5	2.1	2.2					3500	6000					6000		
0.9	**BN 90L**	**4**	1370	6.3	73	0.87	2.05	3.8	1.8	1.8	30	15.1	**FD 05**	26	1700	2100	34	21	**FA 05**	26	2100	34	22
0.5		**8**	670	7.1	57	0.62	2.04	2.4	2.1	2.0					2500	4200					4200		
1.30	**BN 100LA**	**4**	1420	8.7	72	0.83	3.14	4.3	1.7	1.8	82	22	**FD 15**	40	1300	1700	86	28	**FA 15**	40	1700	86	29
0.70		**8**	700	9.6	58	0.64	2.72	2.8	1.8	1.8					2000	3400					3400		
1.8	**BN 100LB**	**4**	1420	12.1	69	0.87	4.3	4.2	1.6	1.7	95	25	**FD 15**	40	1200	1700	99	31	**FA 15**	40	1700	99	32
0.9		**8**	700	12.3	62	0.63	3.3	3.2	1.7	1.8					1600	2600					2600		
2.2	**BN 112M**	**4**	1440	14.6	77	0.85	4.9	5.3	1.8	1.8	168	32	**FD 06S**	60	—	1200	177	42	**FA 06S**	60	1200	177	43
1.2		**8**	710	16.1	70	0.63	3.9	3.3	1.9	1.8					—	2000					2000		
3.6	**BN 132S**	**4**	1440	24	80	0.82	7.9	6.5	2.1	1.9	295	45	**FD 56**	75	—	1000	305	58	**FA 06**	75	1000	305	59
1.8		**8**	720	24	72	0.55	6.6	4.6	1.9	2.0					—	1400					1400		
4.6	**BN 132M**	**4**	1450	30	81	0.83	9.9	6.5	2.2	1.9	383	56	**FD 06**	100	—	1000	393	69	**FA 07**	100	1000	406	74
2.3		**8**	720	31	73	0.54	8.4	4.4	2.3	2.0					—	1300					1300		

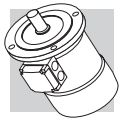

2P — 3000 min^{-1} - S1 — 50 Hz

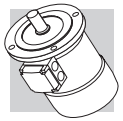

															d.c. brake						a.c. brake				
															FD						FA				
P_n kW			n min^{-1}	M_n Nm	IE1	η (100%) %	η (75%) %	η (50%) %	cosφ	In 400V A	Is/In	Ms/Mn	Ma/Mn	J_m x 10^{-4} kgm^2	IM B5 Kg	Mod	Mb Nm	Z_o 1/h NB	Z_o 1/h SB	J_m x 10^{-4} kgm^2	IM B5 Kg	Mod	Mb Nm	Z_o 1/h	J_m x 10^{-4} kgm^2	IM B5 Kg
0.18	**M 05A**	**2**	2730	0.63	○	59.9	56.9	51.9	0.77	0.56	3.0	2.1	2.0	2.0	3.2	**FD 02**	1.75	3900	4800	2.6	4.9	**FA 02**	1.75	4800	2.6	4.7
0.25	**M 05B**	**2**	2740	0.87	○	66.0	64.8	64.8	0.76	0.72	3.3	2.3	2.3	2.3	3.6	**FD 02**	1.75	3900	4800	3.0	5.3	**FA 02**	1.75	4800	3.0	5.1
0.37	**M 05C**	**2**	2800	1.26	○	69.1	66.8	66.8	0.78	0.99	3.9	2.6	2.6	3.3	4.8	**FD 02**	3.5	3600	4500	3.9	6.5	**FA 02**	3.5	4500	3.9	6.3
0.55	**M 1SD**	**2**	2820	1.86	○	76.0	75.8	74.8	0.76	1.37	5.0	2.9	2.8	4.1	5.8	**FD 03**	5	2900	4200	5.3	8.5	**FA 03**	5	4200	5.3	8.2
0.75	**M 1LA**	**2**	2810	2.6	○	76.6	76.2	76.2	0.76	1.86	5.1	3.1	2.8	5.0	6.9	**FD 03**	5	1900	3300	6.1	9.6	**FA 03**	5	3300	6.1	9.3
1.1	**M 2SA**	**2**	2800	3.8	•	76.4	76.2	75.0	0.81	2.57	4.8	2.8	2.4	9.0	8.8	**FD 04**	10	1500	3000	10.6	11.9	**FA 04**	10	3000	10.6	12.6
1.5	**M 2SB**	**2**	2800	5.1	•	79.1	79.5	77.2	0.81	3.4	4.9	2.7	2.4	11.4	10.6	**FD 04**	15	1300	2600	13.0	9.9	**FA 04**	15	2600	13.0	14.4
2.2	**M 3SA**	**2**	2880	7.3	•	82.7	82.1	81.0	0.80	4.8	6.3	2.9	2.7	24	15.5	**FD 15**	26	1100	2400	28	22	**FA 15**	26	2400	28	23
3	**M 3LA**	**2**	2860	10.0	•	81.5	81.3	77.4	0.79	6.7	5.6	2.6	2.2	31	18.7	**FD 15**	26	700	1600	35	25	**FA 15**	26	1600	35	26
4	**M 3LB**	**2**	2870	13.3	•	83.1	83.0	77.8	0.80	8.7	5.8	2.7	2.5	39	22	**FD 15**	40	450	900	43	28	**FA 15**	40	900	43	29
5.5	**M 4SA**	**2**	2890	18.2	•	84.7	84.5	81.2	0.84	11.2	5.9	2.6	2.2	101	33	**FD 06**	50	—	600	112	46	**FA 06**	50	600	112	47
7.5	**M 4SB**	**2**	2900	25	•	86.5	86.3	84.4	0.85	14.7	6.4	2.6	2.2	145	40	**FD 06**	50	—	550	154	53	**FA 06**	50	550	154	54
9.2	**M 4LA**	**2**	2930	30	•	87.0	86.5	83.6	0.86	17.7	6.7	2.8	2.3	178	51	**FD 56**	75	—	430	189	64	**FA 06**	75	430	189	65
11	**M 4LC**	**2**	2920	36	•	87.6	87.0	86.0	0.88	20.6	6.9	2.9	2.5	210	60											
15	**M 5SB**	**2**	2930	49	•	89.6	89.4	88.0	0.86	28.1	7.1	2.6	2.3	340	70											
18.5	**M 5SC**	**2**	2930	60	•	90.4	90.1	89.0	0.86	34	7.6	2.7	2.3	420	83											
22	**M 5LA**	**2**	2930	72	•	89.9	89.7	89.5	0.88	40	7.8	2.6	2.4	490	95											

○ = n.a. • = IE1

4P — 1500 min^{-1} - S1 — 50 Hz

															d.c. brake						a.c. brake				
															FD						FA				
P_n kW			n min^{-1}	M_n Nm	IE1	η (100%) %	η (75%) %	η (50%) %	cosφ	In 400V A	Is/In	Ms/Mn	Ma/Mn	J_m x 10^{-4} kgm^2	IM B5 Kg	Mod	Mb Nm	Z_o 1/h NB	Z_o 1/h SB	J_m x 10^{-4} kgm^2	IM B5 Kg	Mod	Mb Nm	Z_o 1/h	J_m x 10^{-4} kgm^2	IM B5 Kg
0.09	**M 0B**	**4**	1350	0.64	○	51.7	47.6	42.9	0.60	0.42	2.6	2.5	2.4	1.5	2.9											
0.12	**M 05A**	**4**	1350	0.85	○	59.8	56.2	47.0	0.62	0.47	2.6	1.9	1.8	2.0	3.2	**FD 02**	1.75	10000	13000	2.6	4.9	**FA 02**	1.75	13000	2.6	4.7
0.18	**M 05B**	**4**	1320	1.30	○	54.8	52.9	52.5	0.67	0.71	2.6	2.2	2.0	2.3	3.6	**FD 02**	3.5	10000	13000	3.0	5.3	**FA 02**	3.5	13000	3.0	5.1
0.25	**M 05C**	**4**	1340	1.78	○	65.3	65.0	57.9	0.69	0.80	2.7	2.1	1.9	3.3	4.8	**FD 02**	3.5	7800	10000	3.9	6.5	**FA 02**	3.5	10000	3.9	6.3
0.37	**M 1SD**	**4**	1370	2.6	○	66.8	66.7	63.0	0.76	1.05	3.7	2.0	1.9	6.9	5.5	**FD 03**	5	6000	9400	8.0	8.2	**FA 03**	5	9400	8.0	7.9
0.55	**M 1LA**	**4**	1380	3.8	○	69.0	68.9	68.8	0.74	1.55	4.1	2.3	2.3	9.1	6.9	**FD 53**	7.5	4300	8700	10.2	9.6	**FA 03**	7.5	8700	10.2	9.3
0.75	**M 2SA**	**4**	1400	5.1	•	75.0	74.5	69.3	0.78	1.85	4.9	2.7	2.5	20	9.2	**FD 04**	15	4100	7800	22	13.1	**FA 04**	15	7800	22	13.0
1.1	**M 2SB**	**4**	1400	7.5	•	76.4	76.2	70.4	0.78	2.66	5.1	2.8	2.5	25	10.6	**FD 04**	15	2600	5300	27	14.5	**FA 04**	15	5300	27	14.4
1.5	**M 3SA**	**4**	1410	10.2	•	79.6	80.5	79.3	0.77	3.5	4.6	2.1	2.1	34	15.5	**FD 15**	26	2800	4900	38	22	**FA 15**	26	4900	38	23
2.2	**M 3LA**	**4**	1410	14.9	•	81.1	81.4	79.9	0.75	5.2	4.5	2.2	2.0	40	17	**FD 15**	40	2600	4700	44	24	**FA 15**	40	4700	44	24
3	**M 3LB**	**4**	1410	20	•	82.6	83.8	83.7	0.77	6.8	5.0	2.3	2.2	54	21	**FD 15**	40	2400	4400	58	27	**FA 15**	40	4400	58	28
4	**M 3LC**	**4**	1400	27	○	82.7	83.1	80.5	0.78	9.0	4.7	2.3	2.2	61	23	**FD 55**	55	—	1300	65	29	**FA 15**	40	1300	65	30
5.5	**M 4SA**	**4**	1440	36	•	84.7	84.8	82.5	0.81	11.6	5.5	2.3	2.2	213	42	**FD 56**	75	—	1050	223	55	**FA 06**	75	1050	223	56
7.5	**M 4LA**	**4**	1440	50	•	86.0	86.3	85.3	0.81	15.5	5.7	2.5	2.4	270	51	**FD 06**	100	—	950	280	64	**FA 07**	100	950	280	65
9.2	**M 4LB**	**4**	1440	61	•	88.4	88.6	87.5	0.81	18.8	5.9	2.7	2.5	319	57	**FD 07**	150	—	900	342	73	**FA 07**	150	900	342	75
11	**M 4LC**	**4**	1440	73	•	87.6	87.8	86.0	0.81	22.4	6.0	2.7	2.5	360	65	**FD 07**	150	—	850	382	81	**FA 07**	150	850	382	83
15	**M 5SB**	**4**	1460	98	•	88.7	88.5	88.4	0.81	30.1	6.0	2.3	2.1	650	85	**FD 08**	200	—	750	725	115	**FA 08**	200	750	710	114
18.5	**M 5LA**	**4**	1460	121	•	89.3	89.5	89.2	0.81	37	6.2	2.6	2.5	790	101	**FD 08**	250	—	700	865	131	**FA 08**	250	700	850	130

○ = n.a. • = IE1

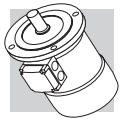

6P — 1000 min^{-1} - S1 — 50 Hz

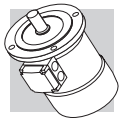

P_n kW			n min^{-1}	M_n Nm	IE1	η (100%) %	η (75%) %	η (50%) %	cosφ	In 400V A	Is/In	Ms/Mn	Ma/Mn	J_m x 10^{-4} kgm^2	IM B5 Kg	d.c. brake FD Mod	Mb Nm	Z_o 1/h NB	Z_o 1/h SB	J_m x 10^{-4} kgm^2	IM B5 Kg	a.c. brake FA Mod	Mb Nm	Z_o 1/h	J_m x 10^{-4} kgm^2	IM B5 Kg
0.09	**M 05A**	**6**	880	0.98	○	41.0	41.0	32.9	0.53	0.60	2.1	2.1	1.8	3.4	4.3	**FD 02**	3.5	9000	14000	4.0	6.0	**FA 02**	3.5	14000	4.0	5.8
0.12	**M 05B**	**6**	870	1.32	○	45.0	44.0	41.8	0.60	0.64	2.1	1.9	1.7	3.7	4.6	**FD 02**	3.5	9000	14000	4.3	6.3	**FA 02**	3.5	14000	4.3	6.1
0.18	**M 1SC**	**6**	900	1.91	○	55.0	55.5	51.0	0.69	0.68	2.6	1.9	1.7	8.4	5.1	**FD 03**	5	8100	13500	9.5	7.8	**FA 03**	5	13500	9.5	7.5
0.25	**M 1SD**	**6**	900	2.7	○	62.0	58.5	51.4	0.71	0.82	2.6	1.9	1.7	10.9	6.3	**FD 03**	5	7800	13000	12	9.0	**FA 03**	5	13000	12	8.7
0.37	**M 1LA**	**6**	910	3.9	○	66.0	60.0	53.3	0.69	1.17	3.0	2.4	2.0	12.9	7.3	**FD 53**	7.5	5100	9500	14	10.0	**FA 03**	7.5	9500	14	9.7
0.55	**M 2SA**	**6**	920	5.7	○	70.0	69.8	64.3	0.68	1.67	3.9	2.6	2.2	25	10.6	**FD 04**	15	4800	7200	27	14.5	**FA 04**	15	7200	27	14.4
0.75	**M 2SB**	**6**	920	7.8	•	70.0	70.0	64.4	0.65	2.38	3.8	2.5	2.2	28	11.5	**FD 04**	15	3400	6400	30	15.4	**FA 04**	15	6400	30	15.3
1.1	**M 3SA**	**6**	920	11.4	•	75.0	74.0	72.0	0.72	2.9	4.3	2.0	1.8	33	17	**FD 15**	26	2700	5000	37	23	**FA 15**	26	5000	37	24
1.5	**M 3LA**	**6**	940	15.2	•	75.2	74.2	70.3	0.72	4.0	4.1	2.1	2.0	82	21	**FD 15**	40	1900	4100	86	27	**FA 15**	40	4100	86	28
1.85	**M 3LB**	**6**	930	19.0	•	76.6	72.8	62.6	0.73	4.8	4.6	2.1	2.0	95	23	**FD 15**	40	1700	3600	99	29	**FA 15**	40	3600	99	30
2.2	**M 3LC**	**6**	930	23	•	77.7	76.8	72.4	0.71	5.8	4.7	2.3	2.1	95	23	**FD 55**	55	—	1900	99	29	**FA 15**	40	1900	99	30
3	**M 4SA**	**6**	940	30	•	79.7	77.0	75.1	0.76	7.1	5.1	1.9	1.8	216	34	**FD 56**	75	—	1400	226	47	**FA 06**	75	1400	226	48
4	**M 4LA**	**6**	950	40	•	81.4	81.5	79.5	0.77	9.2	5.5	2.0	1.8	295	43	**FD 06**	100	—	1200	305	56	**FA 07**	100	1200	305	57
5.5	**M 4LB**	**6**	945	56	•	83.1	80.9	79.1	0.78	12.2	6.1	2.1	1.9	383	54	**FD 07**	150	—	1050	406	70	**FA 07**	150	1050	406	72
7.5	**M 5SA**	**6**	955	75	•	85.0	85.0	84.8	0.81	15.7	5.9	2.2	2.0	740	69	**FD 08**	170	—	900	815	98	**FA 08**	170	900	800	98
11	**M 5SB**	**6**	960	109	•	86.4	86.5	85.9	0.81	22.7	6.6	2.5	2.3	970	89	**FD 08**	200	—	800	1045	119	**FA 08**	200	800	1030	118

○ = n.a. • = IE1

2/4P — 3000/1500 min^{-1} - S1 — 50 Hz

													d.c. brake						a.c. brake				
													FD						FA				
P_n kW			n min^{-1}	M_n Nm	η %	cosφ	In 400V A	Is/In	Ms/Mn	Ma/Mn	J_m x 10^{-4} kgm^2	IM B5 Kg	Mod	Mb Nm	Z_o 1/h NB	Z_o 1/h SB	J_m x 10^{-4} kgm^2	IM B5 Kg	Mod	Mb Nm	Z_o 1/h	J_m x 10^{-4} kgm^2	IM B5 Kg
0.20	**M 05A**	**2**	2700	0.71	55	0.82	0.64	3.5	2.1	1.9	2.9	4.1	**FD 02**	3.5	2200	2600	3.5	5.8	**FA 02**	3.5	2600	3.5	5.6
0.15		**4**	1350	1.06	49	0.67	0.66	2.6	1.8	1.7					4000	5100					5100		
0.28	**M 1SB**	**2**	2700	0.99	56	0.82	0.88	2.9	1.9	1.7	4.7	4.0	**FD 03**	3.5	2100	2400	5.8	6.7	**FA 03**	3.5	2400	5.8	6.4
0.20		**4**	1370	1.39	59	0.68	1.02	3.1	1.8	1.7					3800	4800					4800		
0.37	**M 1SC**	**2**	2740	1.29	56	0.82	1.16	3.5	1.8	1.8	5.8	4.7	**FD 03**	5	1400	2100	6.9	7.4	**FA 03**	5	2100	6.9	7.1
0.25		**4**	1390	1.72	60	0.73	0.82	3.3	2.0	1.9					2900	4200					4200		
0.45	**M 1SD**	**2**	2780	1.55	63	0.85	1.21	3.8	1.8	1.8	6.9	5.5	**FD 03**	5	1400	2100	8.0	8.2	**FA 03**	5	2100	8.0	7.9
0.30		**4**	1400	2.0	63	0.74	0.93	3.8	2.1	1.9					2900	4200					4200		
0.55	**M 1LA**	**2**	2800	1.9	73	0.79	1.38	4.2	2.0	1.8	9.1	6.9	**FD 03**	5	1600	2200	10.2	9.6	**FA 03**	5	2200	10.2	9.3
0.37		**4**	1400	2.5	68	0.72	1.09	3.9	2.2	2.0					3300	4600					4600		
0.75	**M 2SA**	**2**	2780	2.6	65	0.85	1.96	3.8	1.9	1.8	20	9.2	**FD 04**	10	1400	1600	22	13.1	**FA 04**	10	1600	22	13.0
0.55		**4**	1400	3.8	68	0.81	1.44	3.9	1.7	1.7					2700	3600					3600		
1.1	**M 2SB**	**2**	2730	3.9	65	0.86	2.84	3.9	2.0	1.9	25	10.7	**FD 04**	10	1200	1500	27	14.5	**FA 04**	10	1500	27	14.5
0.75		**4**	1410	5.1	75	0.81	1.78	4.5	2.1	2.0					2300	3100					3100		
1.5	**M 3SA**	**2**	2830	5.1	74	0.83	3.5	4.7	2.1	2.0	34	15.5	**FD 15**	26	700	1000	38	22	**FA 15**	26	1000	38	23
1.1		**4**	1420	7.4	77	0.78	2.6	4.3	2.1	2.0					1600	2600					2600		
2.2	**M 3LA**	**2**	2800	7.5	72	0.85	5.2	4.5	2.0	1.9	40	17	**FD 15**	26	600	900	44	24	**FA 15**	26	900	44	24
1.5		**4**	1410	10.2	73	0.79	3.8	4.7	2.0	2.0					1300	2300					2300		
3.5	**M 3LB**	**2**	2850	11.7	80	0.84	7.5	5.4	2.2	2.1	61	23	**FD 15**	40	500	900	65	29	**FA 15**	40	900	65	30
2.5		**4**	1420	16.8	82	0.80	5.5	5.2	2.2	2.2					1000	2100					2100		
4.8	**M 4 SA**	**2**	2900	15.8	81	0.88	9.7	6.0	2.0	1.9	213	42	**FD 06**	50	—	400	233	55	**FA 06**	50	400	233	56
3.8		**4**	1430	25.4	81	0.84	8.1	5.2	2.1	2.1					—	950					950		
5.5	**M 4SB**	**2**	2890	18.2	80	0.87	11.4	5.9	2.4	2.0	213	42	**FD 56**	75	—	350	223	55	**FA 06**	75	350	223	56
4.4		**4**	1440	29	82	0.84	9.2	5.3	2.2	2.0					—	900					900		
7.5	**M 4LA**	**2**	2900	25	82	0.87	15.2	6.5	2.4	2.0	270	51	**FD 06**	100	—	350	280	64	**FA 07**	100	350	280	65
6		**4**	1430	40	84	0.85	12.1	5.8	2.3	2.1					—	950					950		
9.2	**M 4LB**	**2**	2920	30	83	0.86	18.6	6.0	2.6	2.2	319	57	**FD 07**	150	—	300	342	73	**FA 07**	150	300	342	75
7.3		**4**	1440	48	85	0.85	14.6	5.5	2.3	2.1					—	800					800		

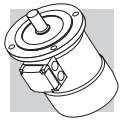

2/6P — 3000/1000 min^{-1} - S3 60/40% — 50 Hz

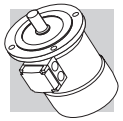

													d.c. brake						a.c. brake				
													FD						FA				
P_n kW			n min^{-1}	M_n Nm	η %	cosφ	In 400V A	Is/In	Ms/Mn	Ma/Mn	J_m x 10^{-4} kgm^2	IM B5 Kg	Mod	Mb Nm	Z_o 1/h NB	Z_o 1/h SB	J_m x 10^{-4} kgm^2	IM B5 Kg	Mod	Mb Nm	Z_o 1/h	J_m x 10^{-4} kgm^2	IM B5 Kg
0.25	**M 1SA**	**2**	2850	0.84	60	0.82	0.73	4.3	1.9	1.8	6.9	5.5	**FD 03**	1.75	1500	1700	8.0	8.2	**FA 03**	1.75	1700	8.0	7.9
0.08		**6**	910	0.84	43	0.70	0.38	2.1	1.4	1.5					10000	13000					13000		
0.37	**M 1LA**	**2**	2880	1.23	62	0.80	1.08	4.4	1.9	1.8	9.1	6.9	**FD 03**	3.5	1000	1300	10.2	9.6	**FA 03**	3.5	1300	10.2	9.3
0.12		**6**	900	1.27	44	0.73	0.54	2.4	1.4	1.5					9000	11000					11000		
0.55	**M 2SA**	**2**	2800	1.88	63	0.86	1.47	4.5	1.9	1.7	20	9.2	**FD 04**	5	1500	1800	22	13.1	**FA 04**	5	1800	22	13.0
0.18		**6**	930	1.85	52	0.65	0.77	3.3	2.0	1.9					4100	6300					6300		
0.75	**M 2SB**	**2**	2800	2.6	66	0.87	1.89	4.3	1.8	1.6	25	10.6	**FD 04**	5	1700	1900	27	14.5	**FA 04**	5	1900	27	14.4
0.25		**6**	930	2.6	54	0.67	1.00	3.2	1.7	1.8					3800	6000					6000		
1.1	**M 3SA**	**2**	2870	3.7	71	0.82	2.73	4.9	1.8	1.9	34	15.5	**FD 15**	13	1000	1300	38	22	**FA 15**	13	1300	38	23
0.37		**6**	930	3.8	63	0.70	1.21	3.1	1.5	1.8					3500	5000					5000		
1.5	**M 3LA**	**2**	2880	5.0	73	0.84	3.53	5.1	1.9	2.0	40	17	**FD 15**	13	1000	1200	44	24	**FA 15**	13	1200	44	24
0.55		**6**	940	5.6	64	0.67	1.85	3.5	1.7	1.8					2900	4000					4000		
2.2	**M 3LB**	**2**	2900	7.2	77	0.85	4.9	5.9	2.0	2.0	61	23	**FD 15**	26	700	900	65	29	**FA 15**	26	900	65	30
0.75		**6**	950	7.5	67	0.64	2.5	3.3	1.9	1.8					2100	3000					3000		
3	**M 4SA**	**2**	2910	9.9	74	0.88	6.6	5.6	2.0	2.1	170	36	**FD 56**	37	—	600	182	48	**FA 06**	37	600	182	50
1.1		**6**	960	10.9	73	0.68	3.2	4.5	2.2	2.0					—	2200					2200		
4.5	**M 4SB**	**2**	2910	14.8	78	0.84	9.9	5.8	1.9	1.8	213	42	**FD 56**	37	—	500	223	55	**FA 06**	37	500	223	56
1.5		**6**	960	14.9	74	0.67	4.4	4.2	1.9	2.0					—	2100					2100		
5.5	**M 4LA**	**2**	2920	18.0	78	0.87	11.7	6.2	2.1	1.9	270	51	**FD 06**	50	—	400	280	64	**FA 06**	50	400	280	65
2.2		**6**	960	22	77	0.71	5.8	4.3	2.1	2.0					—	1900					1900		

2/8P — 3000/750 min^{-1} - S3 60/40% — 50 Hz

													d.c. brake						a.c. brake				
													FD						FA				
P_n kW			n min^{-1}	M_n Nm	η %	cosφ	In 400V A	Is/In	Ms/Mn	Ma/Mn	J_m x 10^{-4} kgm^2	IM B5 Kg	Mod	Mb Nm	Z_o 1/h NB	Z_o 1/h SB	J_m x 10^{-4} kgm^2	IM B5 Kg	Mod	Mb Nm	Z_o 1/h	J_m x 10^{-4} kgm^2	IM B5 Kg
0.37	**M 1LA**	**2**	2800	1.26	63	0.86	0.99	3.9	1.8	1.9	12.9	7.3	**FD 03**	3.5	1200	1300	14	10.0	**FA 03**	3.5	1300	14	9.7
0.09		**8**	670	1.28	34	0.75	0.51	1.8	1.4	1.5					9500	13000					13000		
0.55	**M 2SA**	**2**	2830	1.86	66	0.86	1.40	4.4	2.1	2.0	20	9.2	**FD 04**	5	1500	1800	22	13.1	**FA 04**	5	1800	22	13.0
0.13		**8**	690	1.80	41	0.64	0.72	2.3	1.6	1.7					5600	8000					8000		
0.75	**M 2SB**	**2**	2800	2.6	68	0.88	1.81	4.6	2.1	2.0	25	10.6	**FD 04**	10	1700	1900	27	14.5	**FA 04**	10	1900	27	14.4
0.18		**8**	690	2.5	43	0.66	0.92	2.3	1.6	1.7					4800	7300					7300		
1.1	**M 3SA**	**2**	2870	3.7	69	0.84	2.74	4.6	1.8	1.7	34	15.5	**FD 15**	13	1000	1300	38	22	**FA 15**	13	1300	38	23
0.28		**8**	690	3.9	44	0.56	1.64	2.3	1.4	1.7					3400	5000					5000		
1.5	**M 3LA**	**2**	2880	5.0	69	0.85	3.69	4.7	1.9	1.8	40	17	**FD 15**	13	1000	1200	44	24	**FA 15**	13	1200	44	24
0.37		**8**	690	5.1	46	0.63	1.84	2.1	1.6	1.6					3300	5000					5000		
2.4	**M 3LB**	**2**	2900	7.9	75	0.82	5.6	5.4	2.1	2.0	61	23	**FD 15**	26	550	700	65	29	**FA 15**	26	700	65	30
0.55		**8**	700	7.5	54	0.58	2.5	2.6	1.8	1.8					2000	3500					3500		
3	**M 4SA**	**2**	2920	9.8	72	0.85	7.1	5.6	2.0	1.8	162	36	**FD 56**	37	—	600	182	48	**FA 06**	37	600	182	50
0.75		**8**	710	10.1	61	0.64	2.8	3.0	1.7	1.8					—	3400					3400		
4	**M 4SB**	**2**	2870	13.3	73	0.84	9.4	5.6	2.3	2.4	213	42	**FD 56**	37	—	500	223	55	**FA 06**	37	500	223	56
1		**8**	690	13.8	66	0.62	3.5	2.9	1.9	1.8					—	3500					3500		
5.5	**M 4LA**	**2**	2870	18.3	75	0.84	12.6	6.1	2.4	2.5	270	51	**FD 06**	50	—	400	280	64	**FA 06**	50	400	280	65
1.5		**8**	690	21	68	0.63	5.1	2.9	1.9	1.9					—	2400					2400		

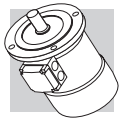

2/12P — 3000/500 min^{-1} - S3 60/40% — 50 Hz

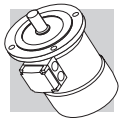

													d.c. brake						a.c. brake				
													FD						FA				
P_n kW			n min^{-1}	M_n Nm	η %	cosφ	In 400V A	Is/In	Ms/Mn	Ma/Mn	J_m x 10^{-4} kgm^2	IM B5 Kg	Mod	Mb Nm	Z_o 1/h NB	Z_o 1/h SB	J_m x 10^{-4} kgm^2	IM B5 Kg	Mod	Mb Nm	Z_o 1/h	J_m x 10^{-4} kgm^2	IM B5 Kg
0.55	**M 2SA**	**2**	2820	1.86	64	0.89	1.39	4.2	1.6	1.7	25	10.6	**FD 04**	5	1000	1300	27	14.5	**FA 04**	5	1300	27	14.4
0.09		**12**	430	2.0	30	0.63	0.69	1.8	1.9	1.8					8000	12000					12000		
0.75	**M 3SA**	**2**	2900	2.5	65	0.81	2.06	5.2	1.9	2.1	34	15.5	**FD 15**	13	700	900	38	22	**FA 15**	13	900	38	23
0.12		**12**	460	2.5	33	0.43	1.22	1.9	1.3	1.6					5000	7000					7000		
1.1	**M 3LA**	**2**	2850	3.7	65	0.85	2.87	4.5	1.6	1.8	40	17	**FD 15**	13	700	900	44	24	**FA 15**	13	900	44	24
0.18		**12**	430	4.0	26	0.54	1.85	1.5	1.3	1.5					4000	6000					6000		
1.5	**M 3LB**	**2**	2900	4.9	67	0.86	3.76	5.6	1.9	1.9	54	21	**FD 15**	13	700	900	58	27	**FA 15**	13	900	58	28
0.25		**12**	440	5.4	36	0.46	2.18	1.8	1.7	1.8					3800	5000					5000		
2	**M 3LC**	**2**	2850	6.7	70	0.84	4.9	4.9	1.8	1.7	61	23	**FD 55**	18	—	700	65	29	**FA 15**	18	700	65	30
0.3		**12**	450	6.4	38	0.47	2.4	1.7	1.6	1.7					—	3500					3500		
3	**M 4SA**	**2**	2920	9.8	74	0.87	6.7	6.8	2.3	1.9	213	42	**FD 56**	37	—	450	223	55	**FA 06**	37	450	223	56
0.5		**12**	470	10.2	51	0.43	3.3	2.0	1.7	1.6					—	3000					3000		
4	**M 4LA**	**2**	2920	13.1	75	0.89	8.6	5.9	2.4	2.3	270	51	**FD 56**	37	—	400	280	64	**FA 06**	37	400	280	65
0.7		**12**	460	14.5	53	0.44	4.3	1.9	1.7	1.6					—	2800					2800		

BN - IM B5

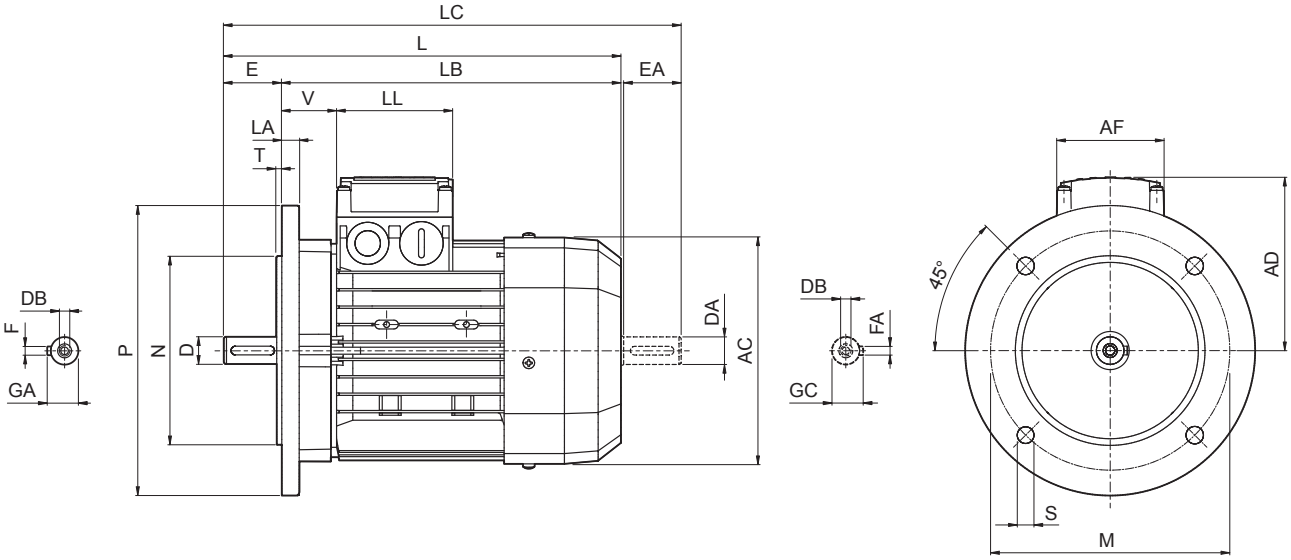

	Shaft					Flange						Motor							
	D DA	E EA	DB	GA GC	F FA	M	N	P	S	T	LA	AC	L	LB	LC	AD	AF	LL	V
BN 56	9	20	M3	10.2	3	100	80	120	7	3	8	110	185	165	207	91	74	80	34
BN 63	11	23	M4	12.5	4	115	95	140	9.5		10	121	207	184	232	95			26
BN 71	14	30	M5	16	5	130	110	160		3.5		138	249	219	281	108			37
BN 80	19	40	M6	21.5	6	165	130	200	11.5		11.5	156	274	234	315	119			38
BN 90	24	50	M8	27	8							176	326	276	378	133	98	98	44
BN 100	28	60	M10	31		215	180	250	14	4	14	195	367	307	429	142			50
BN 112											15	219	385	325	448	157			52
BN 132	38	80	M12	41	10	265	230	300			20	258	493	413	576	193	118	118	58
BN 160 MR	42 38 (1)	110 80 (1)	M16 M12 (1)	45 41 (1)	12 10 (1)	300	250	350	18.5	5	15		562	452	645				218
BN 160 M												310	596	486	680	245	187	187	51
BN 160 L																			
BN 180 M	48 38 (1)	110 110 (1)	M16 M12 (1)	51.5 41 (1)	14 10 (1)							310	640	530	724				
BN 180 L	48 42 (1)		M16 M16 (1)	51.5 45 (1)	14 12 (1)						18	348	708	598	823	261			52
BN 200 L	55 42 (1)		M20 M16 (1)	59 45 (1)	16 12 (1)	350	300	400					722	612	837				66

NOTE:
1) These values refer to the rear shaft end.

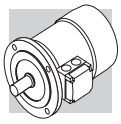

BN - IM B14

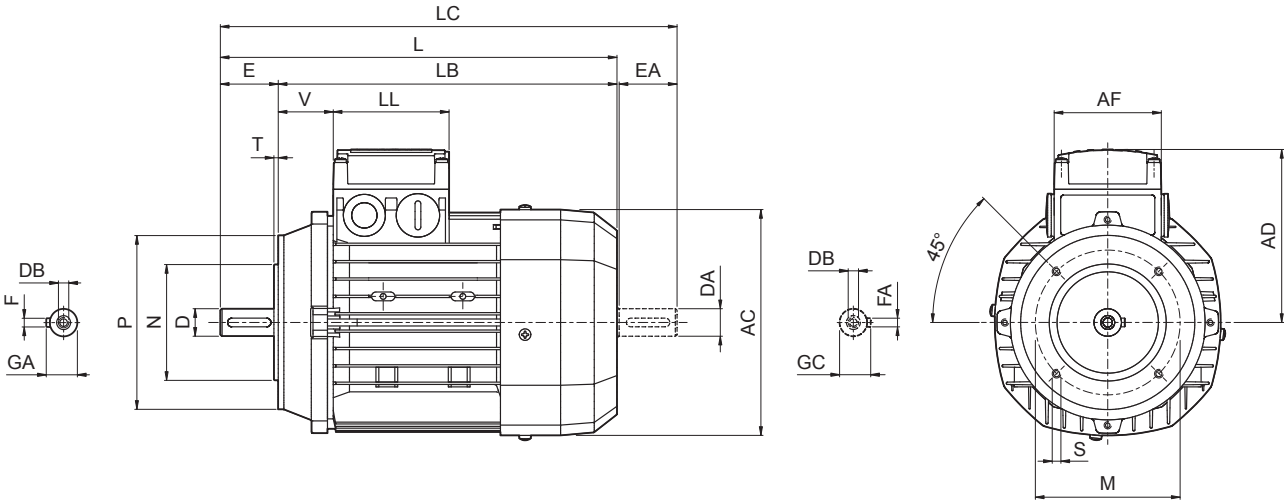

	Shaft					Flange					Motor							
	D DA	**E EA**	**DB**	**GA GC**	**F FA**	**M**	**N**	**P**	**S**	**T**	**AC**	**L**	**LB**	**LC**	**AD**	**AF**	**LL**	**V**
BN 56	9	20	M3	10.2	3	65	50	80	M5	2.5	110	185	165	207	91	74	80	34
BN 63	11	23	M4	12.5	4	75	60	90			121	207	184	232	95			26
BN 71	14	30	M5	16	5	85	70	105	M6		138	249	219	281	108			37
BN 80	19	40	M6	21.5	6	100	80	120		3	156	274	234	315	119			38
BN 90	24	50	M8	27	8	115	95	140	M8		176	326	276	378	133	98	98	44
BN 100	28	60	M10	31		130	110	160		3.5	195	367	307	429	142			50
BN 112											219	385	325	448	157			52
BN 132	38	80	M12	41	10	165	130	200	M10	4	258	493	413	576	193	118	118	58

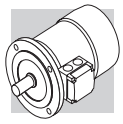

BN_FD ; IM B5

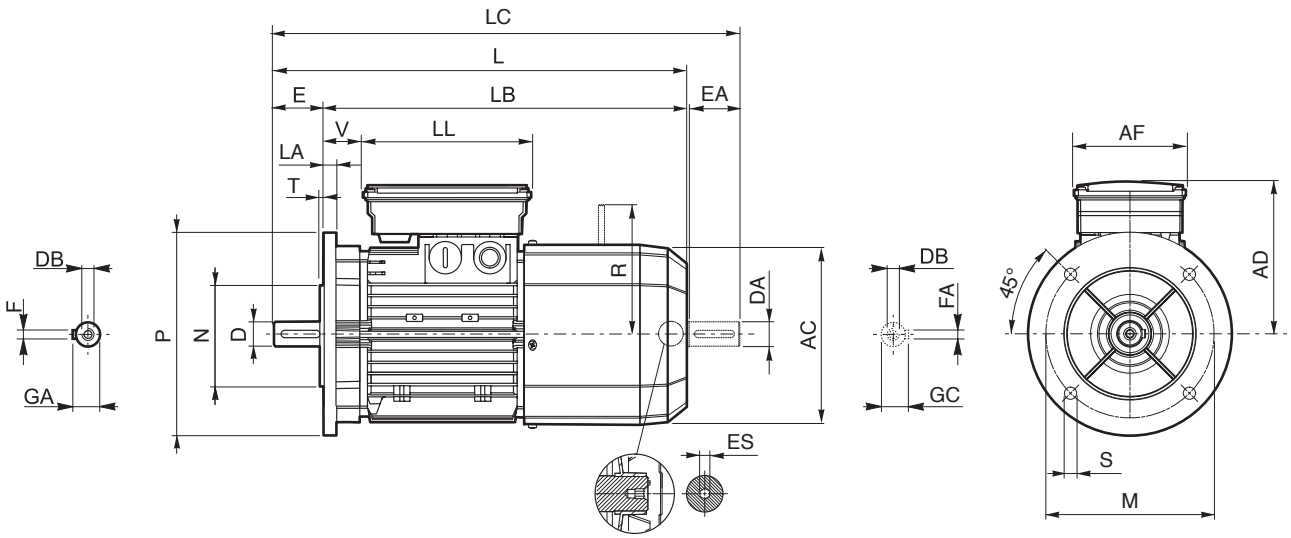

	Shaft					Flange						Motor									
	D DA	E EA	DB	GA GC	F FA	M	N	P	S	T	LA	AC	L	LB	LC	AD	AF	LL	V	R	ES
BN 63	11	23	M4	12.5	4	115	95	140	9.5	3	10	121	272	249	297	122	98	133	14	96	5
BN 71	14	30	M5	16	5	130	110	160	9.5	3.5		138	310	280	342	135			25	103	
BN 80	19	40	M6	21.5	6	165	130	200	11.5		11.5	156	346	306	388	146			41	129	
BN 90 S	24	50	M8	27	8							176	409	359	461	149	110	165	39		6
BN 90 L																146				160	
BN 100	28	60	M10	31		215	180	250	14	4	14	195	458	398	521	158		165	62		
BN 112											15	219	484	424	547	173		165	73	199	
BN 132	38	80	M12	41	10	265	230	300			20	258	603	523	686	210	140	188	46	204 (2)	
BN 160 MR	42 38 (1)	110 80 (1)	M16 M12 (1)	45 41 (1)	12 10 (1)	300	250	350	18.5	5	15		672	562	755				161	226	
BN 160 M												310	736	626	820	245	187	187	51	266	—
BN 160 L	42 38 (1)	110 80 (1)	M16 M12 (1)	45 41 (1)	12 10 (1)																
BN 180 M	48 38 (1)			51.5 41 (1)	14 10 (1)								780	670	864						
BN 180 L	48 42 (1)	110 110 (1)	M16 M16 (1)	51.5 45 (1)	14 12 (1)						18	348	866	756	981	261			52	305	
BN 200 L	55 42 (1)		M20 M16 (1)	59 45 (1)	16 12 (1)	350	300	400	18.5				878	768	993				64		

NOTE:
1) These values refer to the rear shaft end.
2) For FD07 brake value R=226.

ES hexagon is not supplied with PS option.

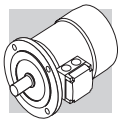

BN_FD ; IM B14

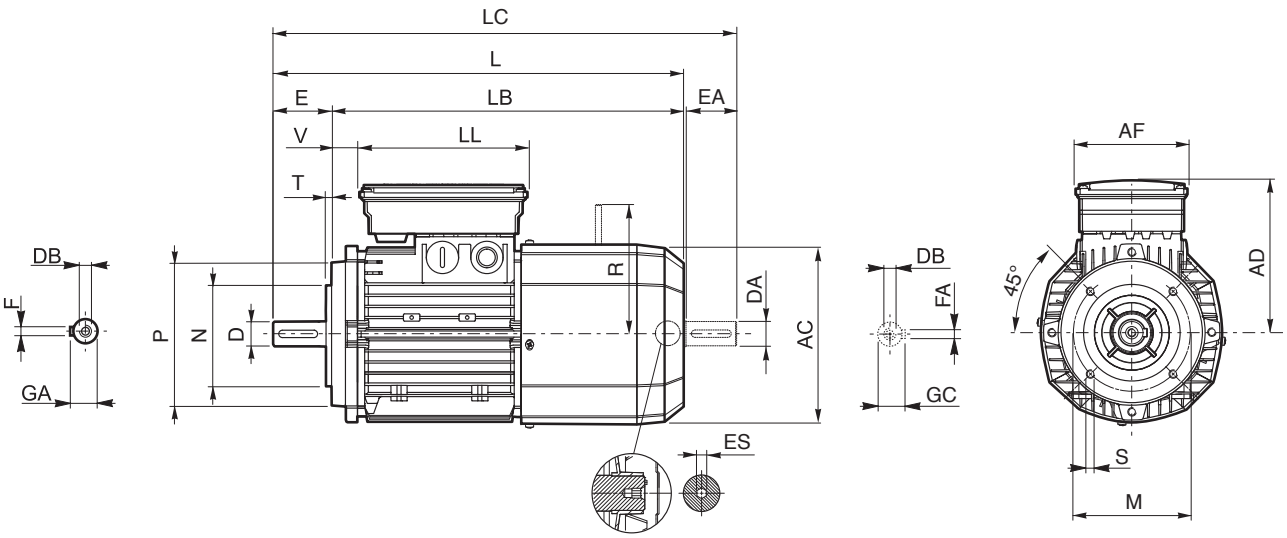

	Shaft					Flange					Motor									
	D DA	**E EA**	**DB**	**GA GC**	**F FA**	**M**	**N**	**P**	**S**	**T**	**AC**	**L**	**LB**	**LC**	**AD**	**AF**	**LL**	**V**	**R**	**ES**
BN 63	11	23	M4	12.5	4	75	60	90	M5	2.5	121	272	249	297	122	98	133	14	96	5
BN 71	14	30	M5	16	5	85	70	105	M6		138	310	280	342	135			25	103	
BN 80	19	40	M6	21.5	6	100	80	120		3	156	346	306	388	146			41	129	
BN 90 S	24	50	M8	27	8	115	95	140	M8		176	409	359	461	149	110	165	39	129	6
BN 90 L															146				160	
BN 100	28	60	M10	31		130	110	160		3.5	195	458	398	521	158			62		
BN 112											219	484	424	547	173			73	199	
BN 132	38	80	M12	41	10	165	130	200	M10	4	258	603	523	686	210	140	188	46	204 (1)	

NOTE:
1) For FD07 brake value R=226.

ES hexagon is not supplied with PS option.

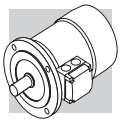

BN_FA - IM B5

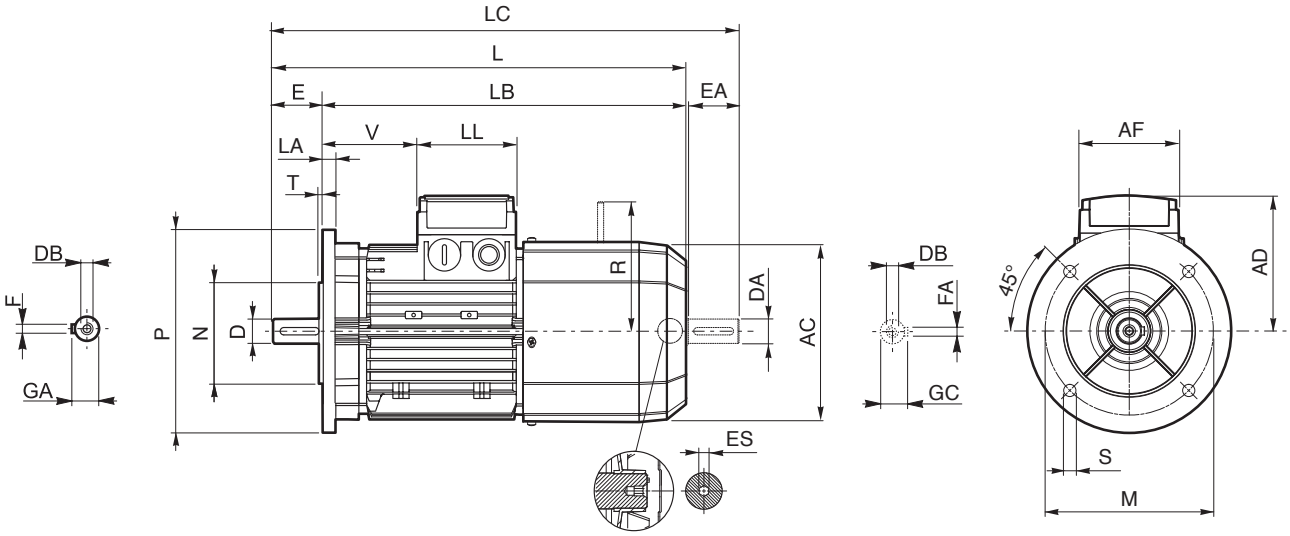

	Shaft					Flange						Motor									
	D DA	E EA	DB	GA GC	F FA	M	N	P	S	T	LA	AC	L	LB	LC	AD	AF	LL	V	R	ES
BN 63	11	23	M4	12.5	4	115	95	140	9.5	3	10	121	272	249	297	95	74	80	26	116	5
BN 71	14	30	M5	16	5	130	110	160		3.5		138	310	280	342	108			68	124	
BN 80	19	40	M6	21.5	6	165	130	200	11.5		11.5	156	346	306	388	119			83	134	
BN 90	24	50	M8	27	8							176	409	359	461	133	98	98	95	160	6
BN 100	28	60	M10	31		215	180	250	14	4	14	195	458	398	521	142			119		
BN 112											15	219	484	424	547	157			128	198	
BN 132	38	80	M12	41	10	265	230	300			20	258	603	523	686	210	140	188	46	200 (2)	
BN 160 MR	42 38 (1)	110 80 (1)	M16 M12 (1)	45 41 (1)	12 10 (1)	300	250	350	18.5	5	15		672	562	755	193	118	118	218	217	
BN 160 M												310	736	626	820	245	187	187	51	247	—
BN 160 L																					
BN 180 M				51.5 41 (1)	14 10 (1)								780	670	864						

NOTE:
1) These values refer to the rear shaft end.
2) For FA07 brake value R=217.

Dimensions AD, AF, LL and V, relevant to terminal box of motors BN…FA featuring the separate brake supply (option SA), are coincident with corresponding dimensions of same-size BN…FD motors

ES hexagon is not supplied with PS option.

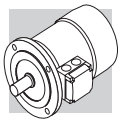

BN_FA - IM B14

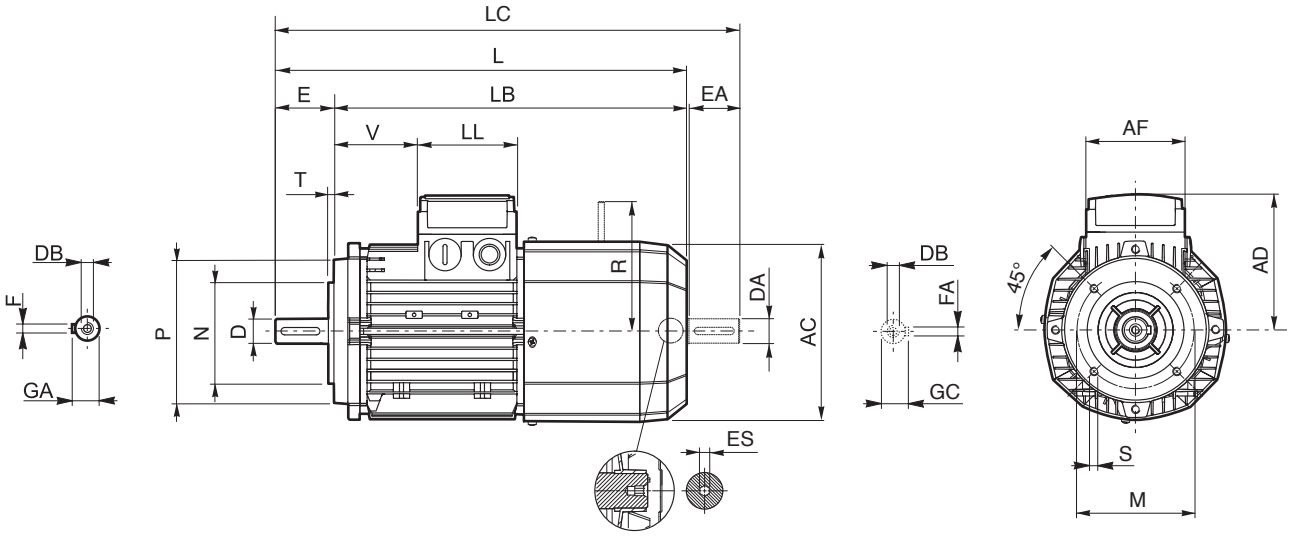

	Shaft					Flange					Motor									
	D DA	**E EA**	**DB**	**GA GC**	**F FA**	**M**	**N**	**P**	**S**	**T**	**AC**	**L**	**LB**	**LC**	**AD**	**AF**	**LL**	**V**	**R**	**ES**
BN 63	11	23	M4	12.5	4	75	60	90	M5	2.5	121	272	249	119	95	74	80	26	116	5
BN 71	14	30	M5	16	5	85	70	105	M6		138	310	280	342	108			68	124	
BN 80	19	40	M6	21.5	6	100	80	120		3	156	346	306	388	119			83	134	
BN 90	24	50	M8	27	8	115	95	140	M8		176	409	359	461	133	98	98	95	160	6
BN 100	28	60	M10	31		130	110	160		3.5	195	458	398	521	142			119		
BN 112											219	484	424	547	157			128	198	
BN 132	38	80	M12	41	10	165	130	200	M10	4	258	603	523	686	210	140	188	46	200 (1)	

NOTE:
1) For FA07 brake value R=217.

Dimensions AD, AF, LL and V, relevant to terminal box of motors BN…FA featuring the separate brake supply (option SA), are coincident with corresponding dimensions of same-size BN…FD motors

ES hexagon is not supplied with PS option.

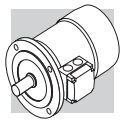

M

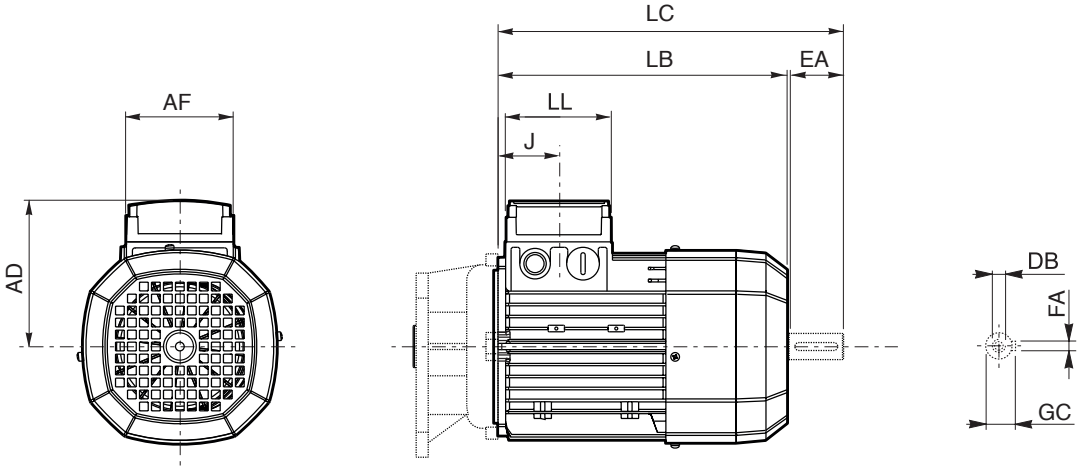

	Rear shaft end					Motor						
	DA	**EA**	**DB**	**FA**	**GC**	**AC**	**LB**	**LC**	**AF**	**LL**	**J**	**AD**
M 0	9	20	M3	3	10.2	110	133	155	74	80	42	91
M 05	11	23	M4	4	12.5	121	165	191			48	95
M 1	14	30	M5	5	16	138	187	219			45	108
M 2 S	19	40	M6	6	21.5	156	202	245			44	119
M 3 S	28	60	M10	8	31	195	230	293	98	98	53.5	142
M 3 L							262	325				
M 4	38	80	M12	10	41	258	361	444	118	118	64.5	193
M 4 LC							396	479				
M 5 S						310	418	502	187	187	77	245
M 5 L							462	546				

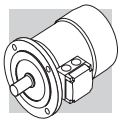

M_FD

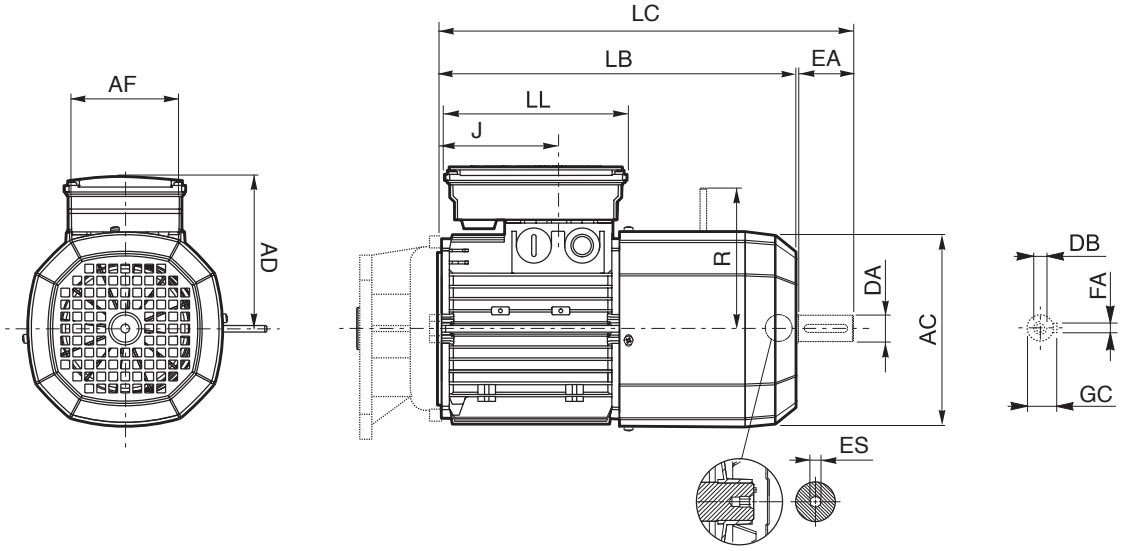

	Rear shaft end					Motor								
	DA	**EA**	**DB**	**FA**	**GC**	**AC**	**LB**	**LC**	**AF**	**LL**	**J**	**AD**	**R**	**ES**
M 05	11	23	M4	4	12.5	121	231	256	98	133	48	122	96	5
M 1	14	30	M5	5	16	138	248	280			73	135	103	
M 2 S	19	40	M6	6	21.5	156	272	314			88	146	129	
M 3 S	28	60	M10	8	31	195	326	389	110	165	124.5	158	160	6
M 3 L							353	416						
M 4	38	80	M12	10	41	258	470	553	140	188	185.5	210	204 (1)	
M 4 LC							495	578			64.5		226	
M 5 S						310	558	642	187	187	77	245	266	—
M 5 L							602	686						

NOTE:
1) For FD07 brake value R=226.

ES hexagon is not supplied with PS option.

M_FA

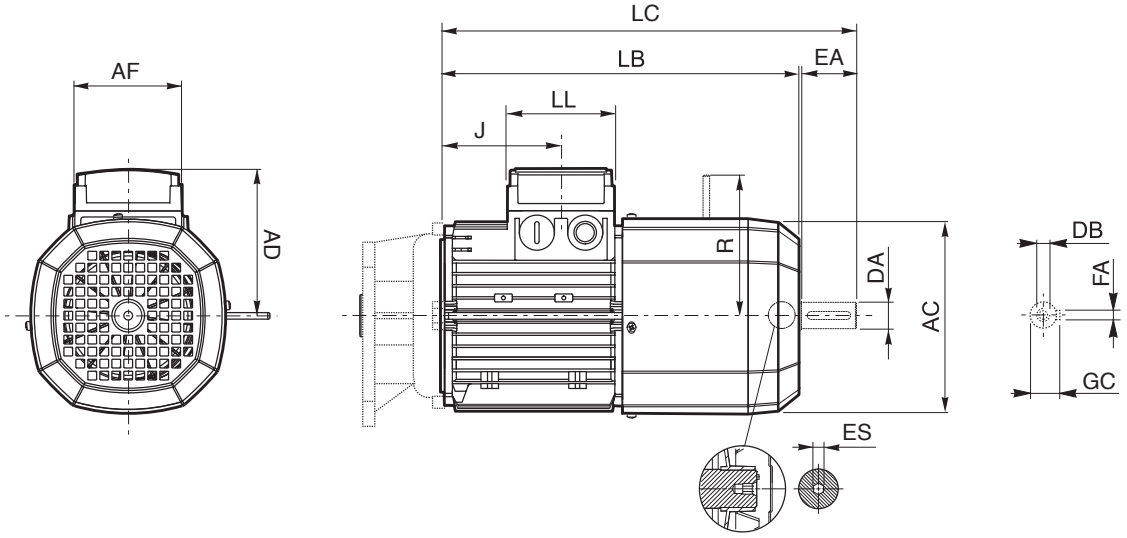

	Rear shaft end					Motor								
	DA	**EA**	**DB**	**FA**	**GC**	**AC**	**LB**	**LC**	**AF**	**LL**	**J**	**AD**	**R**	**ES**
M 05	11	23	M4	4	12.5	121	231	256	74	80	48	95	116	5
M 1	14	30	M5	5	16	138	248	280			73	108	124	
M 2 S	19	40	M6	6	21.5	156	272	314			88	119	134	
M 3 S	28	60	M10	8	31	195	326	389	98	98	124.5	142	160	6
M 3 L							353	416						
M 4	38	80	M14	10	41	258	470	553	140	188	185.5	210	200 (1)	
M 4 LC							495	578			64.5		217	
M 5 S			M12			310	558	642	187	187	77	245	247	—
M 5 L							602	686						

NOTE:
1) For FA07 brake value R=217.

Dimensions AD, AF, LL and V, relevant to terminal box of motors M…FA featuring the separate brake supply (option SA), are coincident with corresponding dimensions of same-size M…FD motors

ES hexagon is not supplied with PS option.

INDEX OF REVISIONS

BR_CAT_VFW_STD_ENG_R07_1	
	Description
96	Updated motor availability for VF130_P112.
80, 82, 103, 104	Updated technical data and values of moment of inertia for WR 75 and WR 86 gearboxes P90_B5 IEC style.

2017 12 31

This publication supersedes and replaces any previous edition and revision. We reserve the right to implement modifications without notice.
This catalogue cannot be reproduced, even partially, without prior consent.

Bonfiglioli
Forever Forward

We have a relentless commitment to excellence, innovation and sustainability. Our team creates, distributes and services world-class power transmission and drive solutions to keep the world in motion.

HEADQUARTERS
Bonfiglioli Riduttori S.p.A.
Via Giovanni XXIII, 7/A
40012 Lippo di Calderara di Reno
Bologna (Italy)
tel: +39 051 647 3111
fax: +39 051 647 3126
bonfiglioli@bonfiglioli.com
www.bonfiglioli.com