| Rev. | Eco. | Date | Name |
|---|---|---|---|
| A | | 2010/9/17 | Daniel |
| | | | |
| | | | |
| | | | |

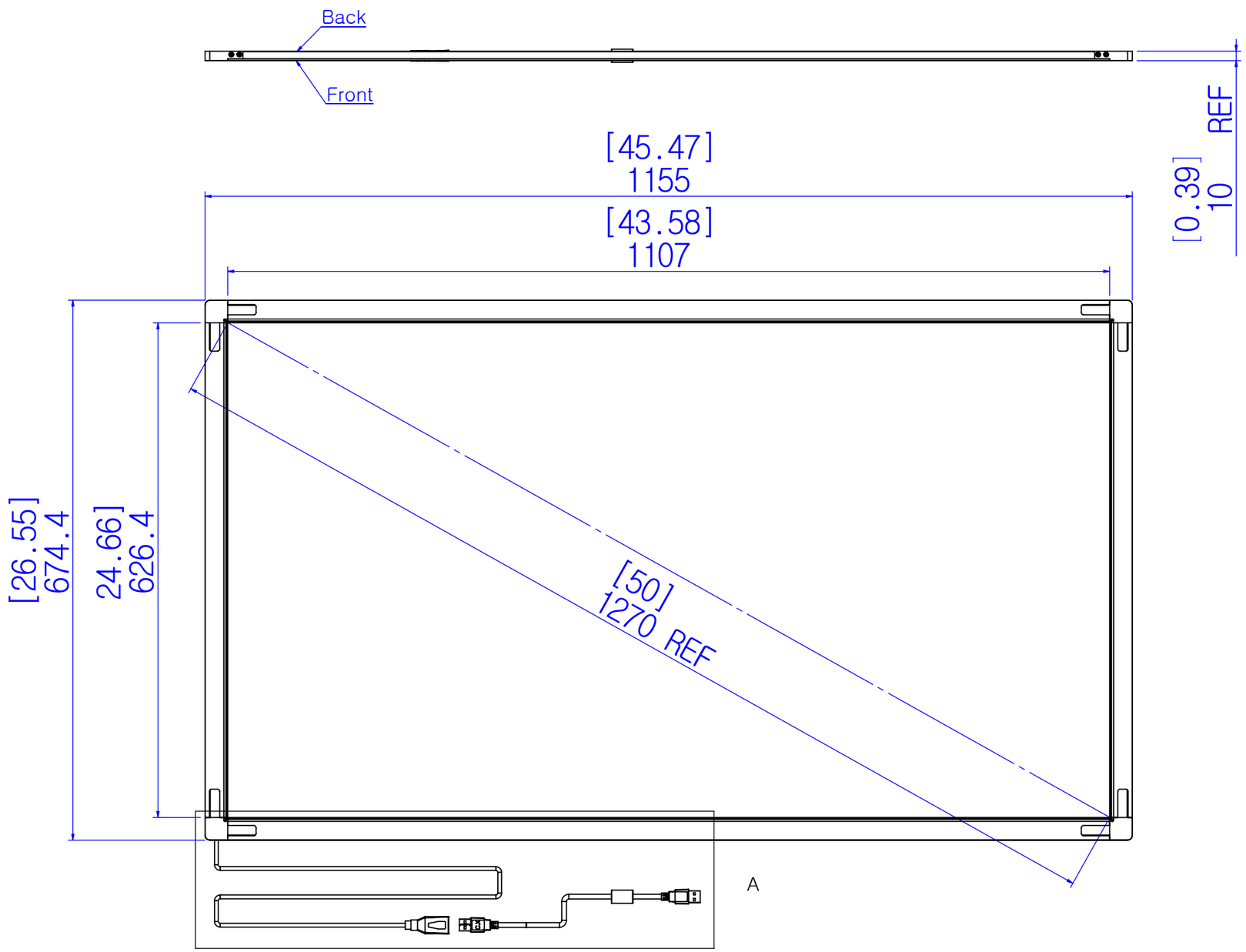


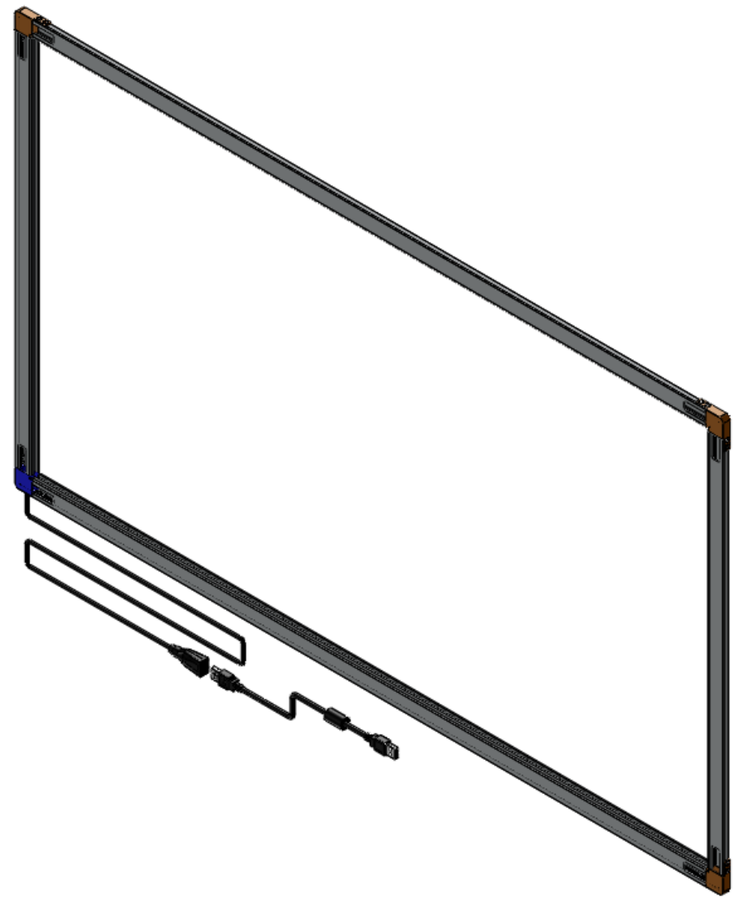

# PQ Labs Multi-Touch Integrator Kit

A
1 : 5

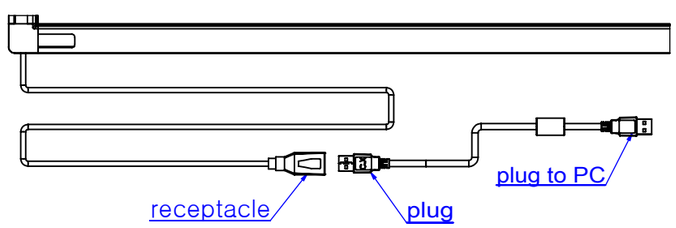


1.USB "Series A" Receptacle
Cable length is 350mm REF

2.USB "Series A" plug
Cable length is 1500mm

| Finish | |
|---|---|
| Surface Treatment | |

| Qty. | Pos. | Object | Material | Mass (in Kg) | Remarks | Part No. | Type |
|---|---|---|---|---|---|---|---|

Projection

PQ Labs

Title: Multi-Touch G3L 50"

| | Name | Date |
|---|---|---|
| Drawn | Daniel | 2010/9/17 |
| Released | Daniel | 2010/9/17 |

Dwg. Nr. 3

Nr./sheet

Scale

This drawing and information here in is the properly of PQ Labs,Inc. and is to be used in confidence. It shall not be copied or given to any third party without written permission from PQ Labs,Inc.