Rev.	Eco.	Date	Name
A		2010/9/17	Daniel

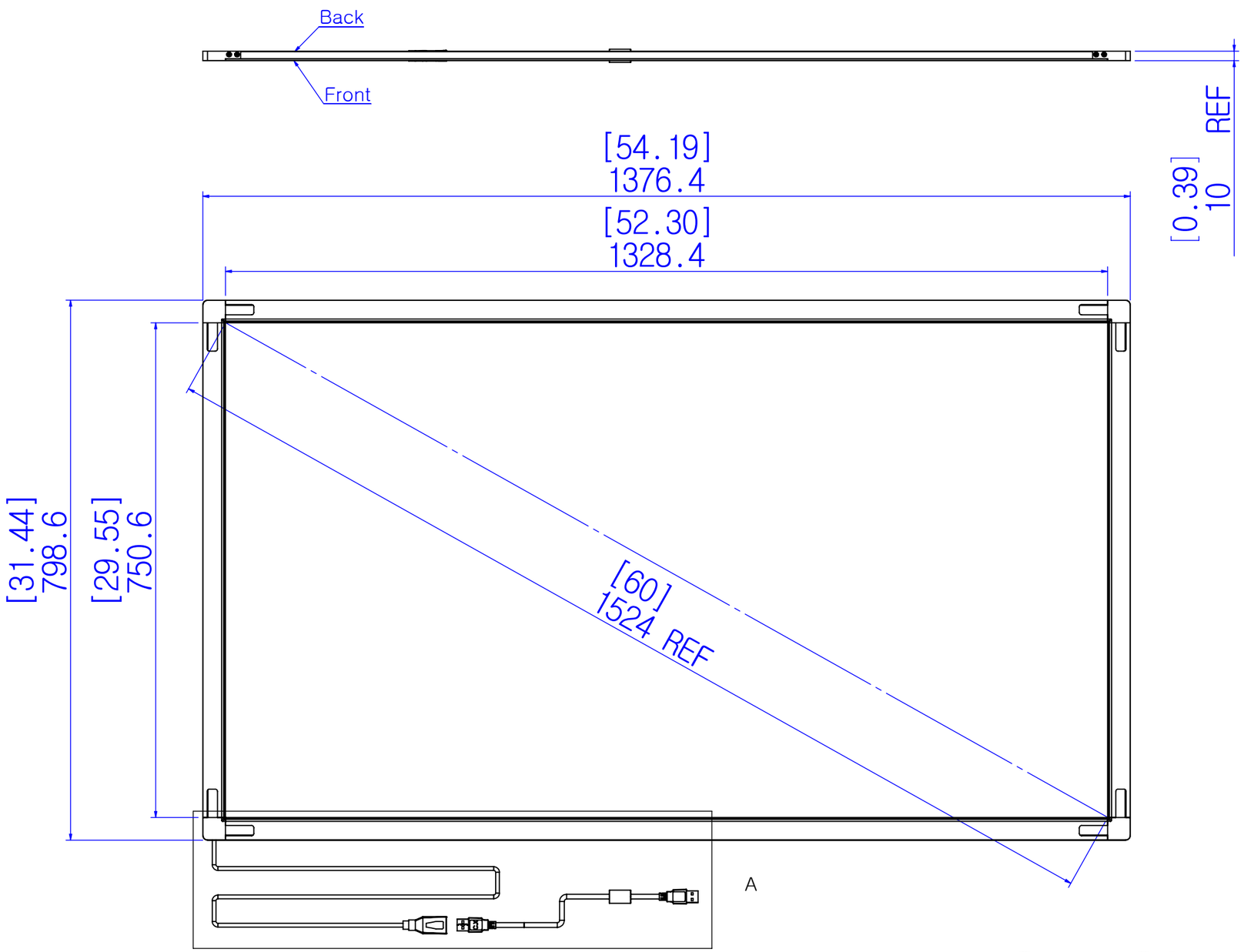

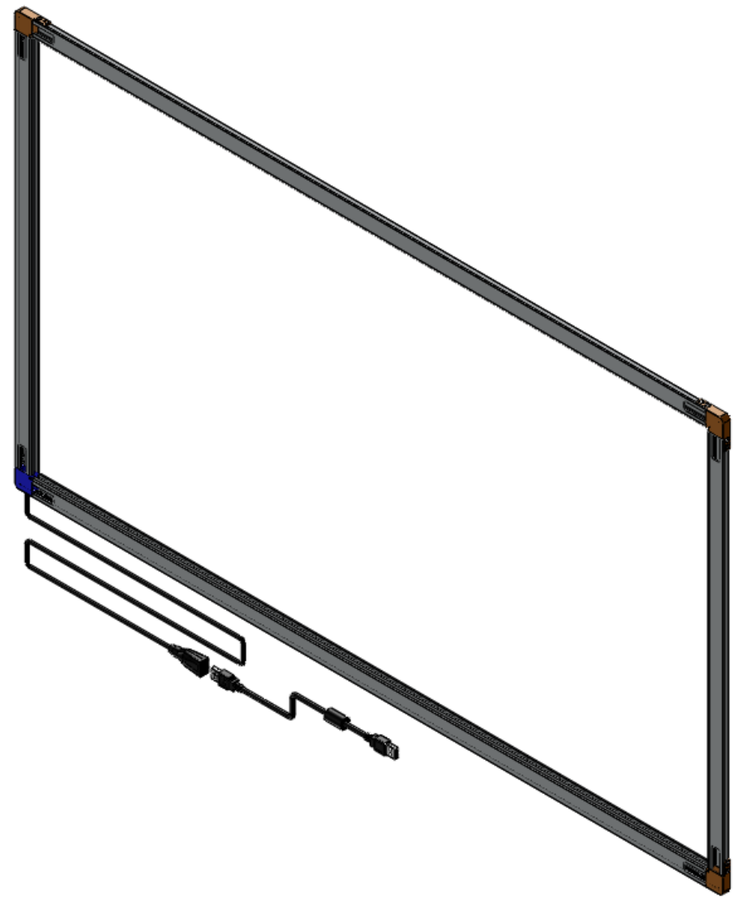

PQ Labs Multi-Touch Integrator Kit

A
1 : 5

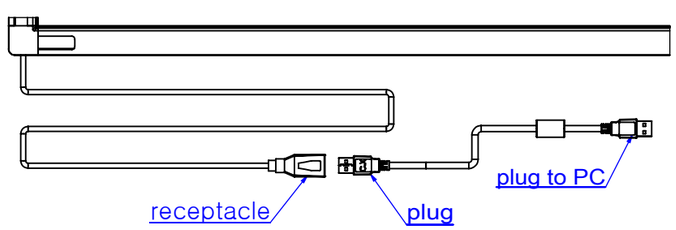

1.USB "Series A" Receptacle
Cable length is 350mm REF

2.USB "Series A" plug
Cable length is 1500mm

Finish
Surface Treatment

Qty.	Pos.	Object	Material	in Kg Mass	Remarks	Part No.	Type

Projection

PQ Labs

Title: Multi-Touch G3L 60"

	Name	Date
Drawn	Daniel	2010/9/17
Released	Daniel	2010/9/17

Dwg. Nr. 3

Nr./sheet

Scale

This drawing and information here in is the properly of PQ Labs,Inc. and is to be used in confidence. It shall not be copied or given to any third party without written permission from PQ Labs,Inc.