CATCH THE LED

Digital Logic Design Project

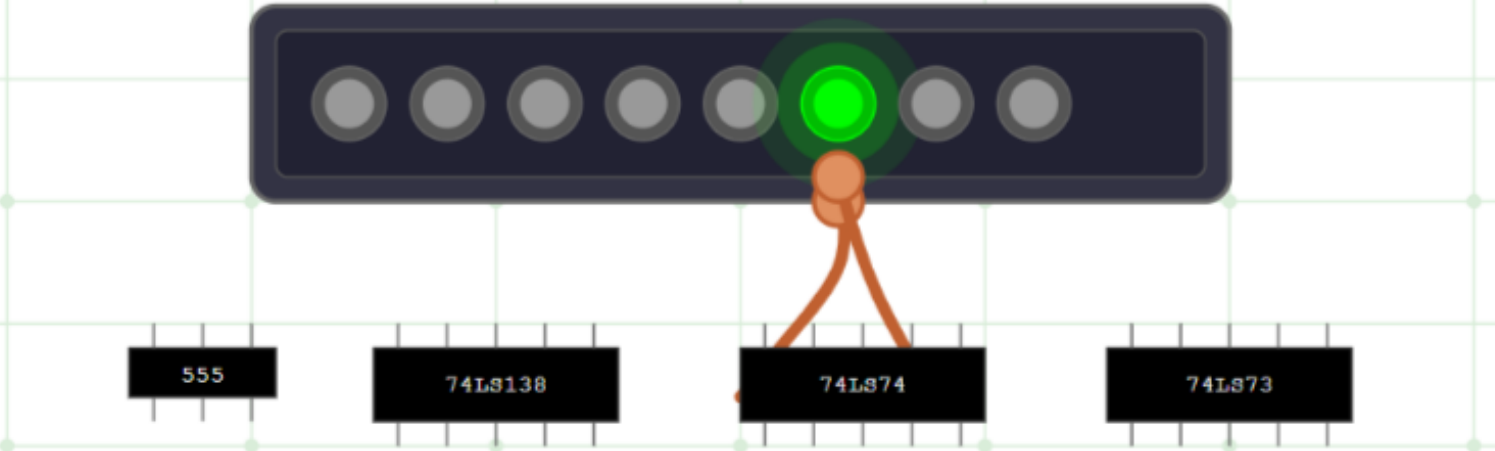

10100 01000011 01001000 00100000 01010100 01001000 01000101 00100000 01001

why this project?

- Hands-on experience with Proteus, 555 timers, D-flip-flops, and decoders
- Interactive & Engaging
- Modular & Scalable Architecture
- Low-Cost, Low-Risk Prototype
- Foundation for Advanced Extensions

System Block Diagram

- Clock Generator (555 astable)
- State Registers (D-FFs)
- 3-to-8 Decoder → LEDs
- “Catch” Detection Logic
- Score Counter

Clock Generator

- Components: NE555, R_1, R_2, C_1
- Operation: Generates ~1–5 Hz pulses for synchronizing all flip-flops
- Key Equation:
- $T_h = 0.693\,(R_1 + R_2)\,C$
- $T_l = 0.693\,R_2\,C$

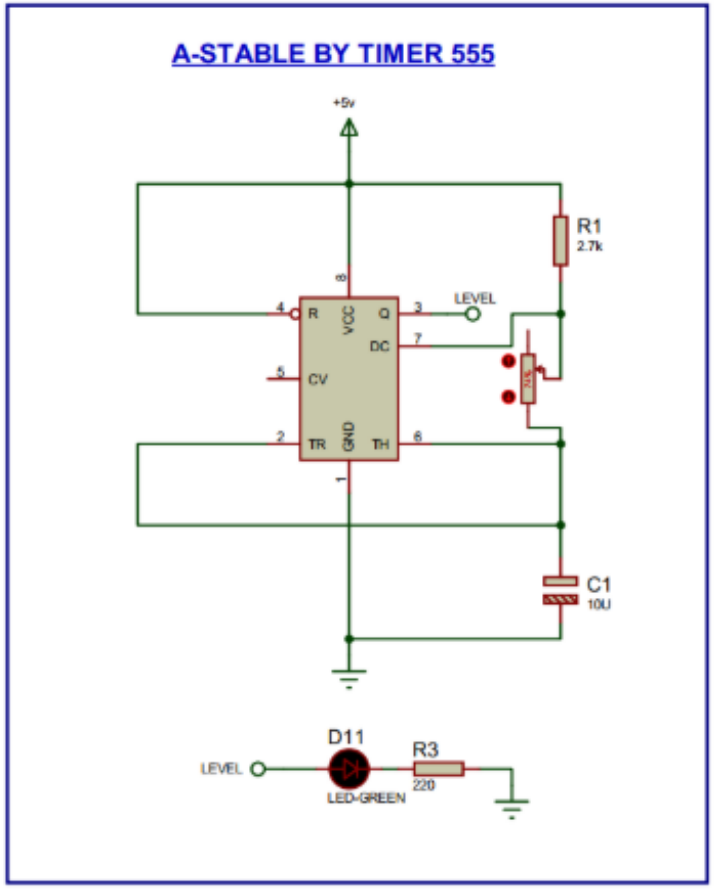

State Diagram and Analysis

- 8 Forward States (LEDs 0→7)
- 8 Reverse States (LEDs 7→0)

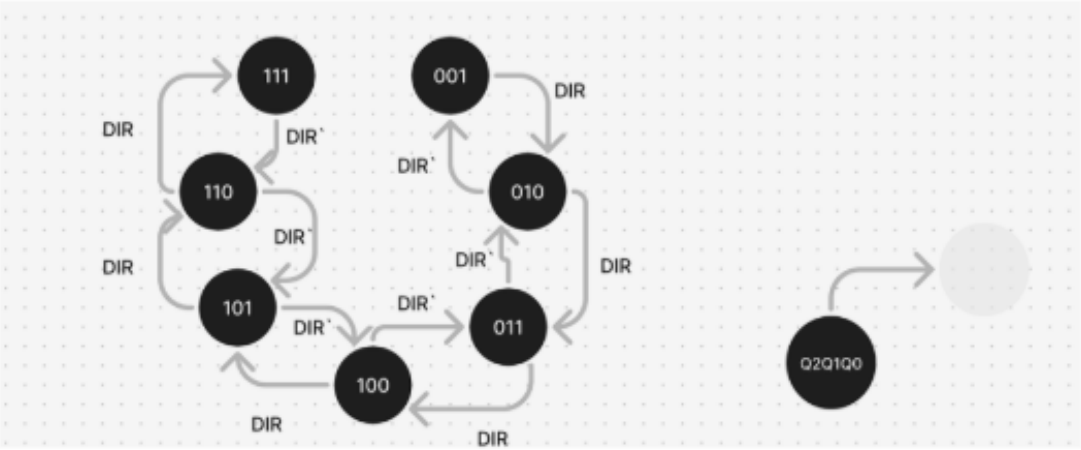

“Catch” Detection Logic

- Mealy vs. Moore hybrid: Catch signal depends on current LED state + button input

- Gate network: XOR to compare “green-LED active” + PUSH, gated by DIR

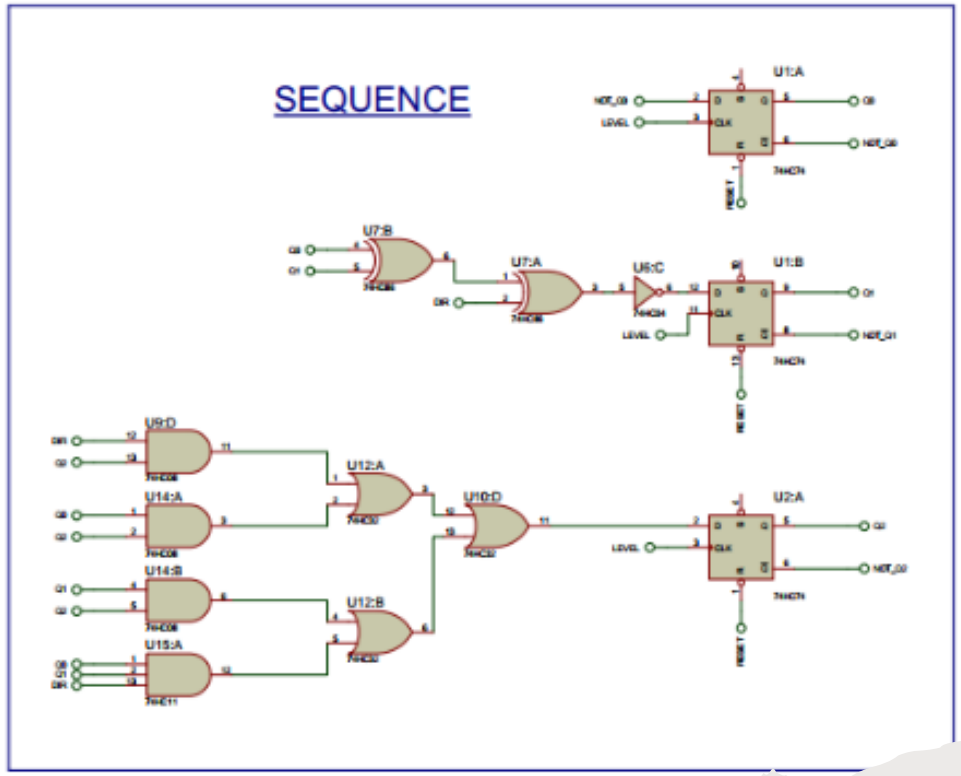

DIRECTION/DECODER

- Purpose of direction:
- Determines whether the LED chase "walks" forward (0→1→2...) or backward (7→6→5...), flipping direction automatically at the ends.

- Implementation:
- T-Flip-Flop (U16, 74HC76)

- Purpose of decoder:
- Converts the 3-bit position code ($Q_2Q_1Q_0$) into one-hot signals to light exactly one of eight LEDs.

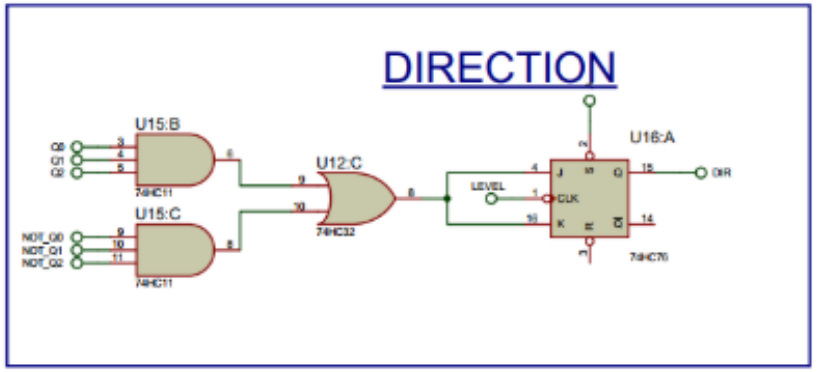

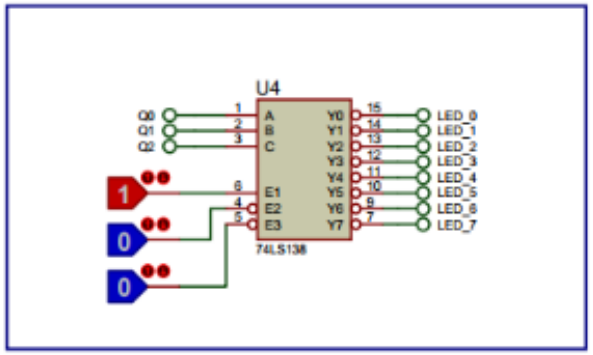

Score Counter

- tracks each player's successful catches
- scores ranging from 0 to 3
- score counter is implemented using two T flip-flops

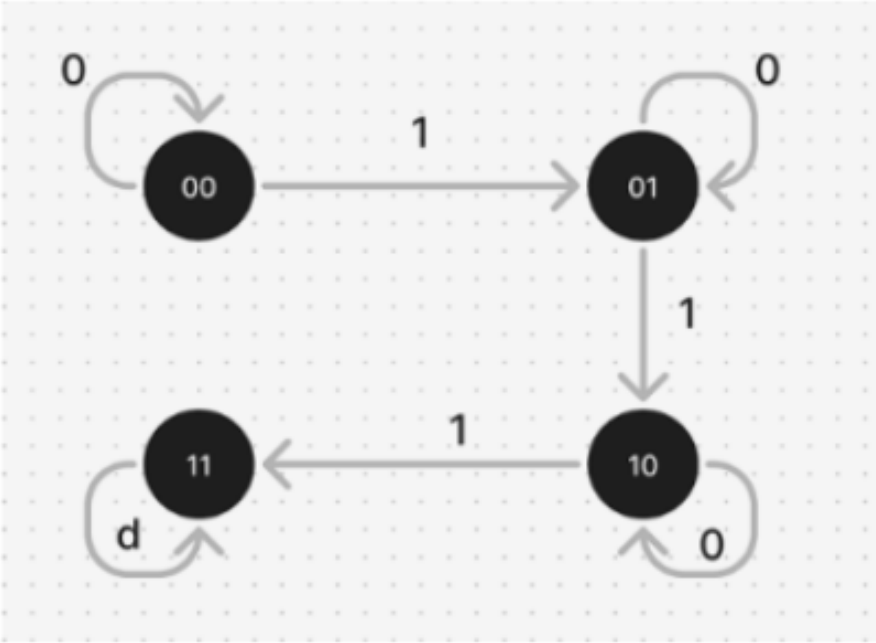

Score Counter & Display

- Counter: Two T-FFs form a 0–3 counter; toggles on catch signal
- Decoder: Reuses a 3-to-8 decoder for visual score LEDs
- Reset Logic: Manual push-button or auto-reset at max score

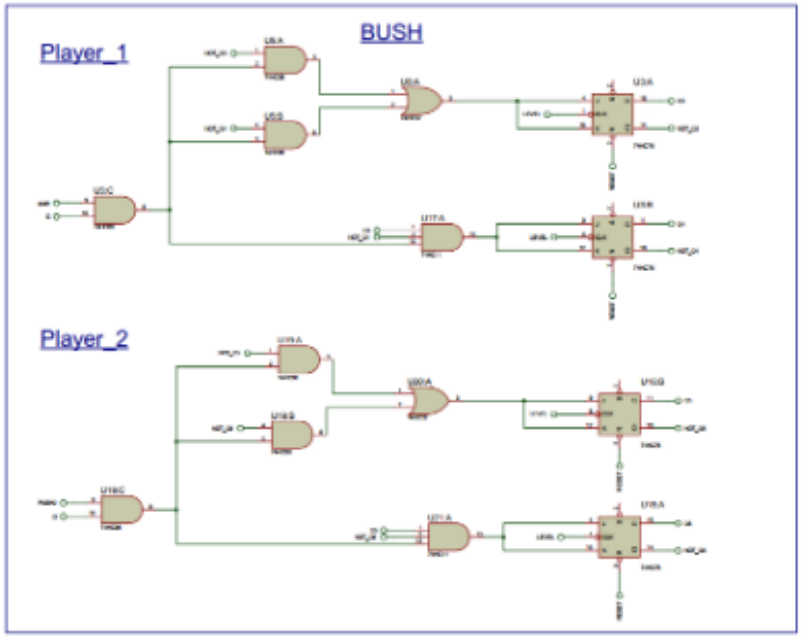

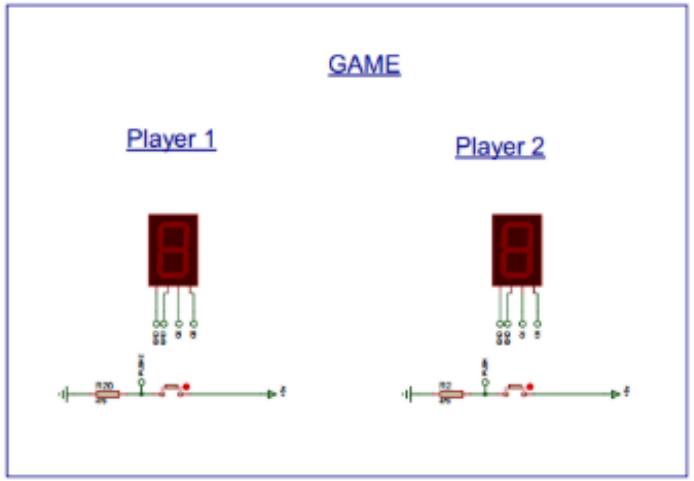

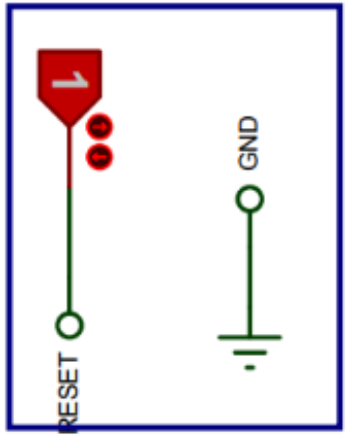

DETECT WINNER

- Operation: The circuit uses NOR gates (74HC08) and NOT gates (74HC04) to compare the score bits. Specifically:
- Q3 and Q4 (Player 1's score) are fed into a NOR gate (U5:D). The output is high only if Player 1's score is not 3 (i.e., Q3=Q4=1).
- Q5 and Q6 (Player 2's score) are fed into another NOR gate (U9:A). The output is high only if Player 2's score is not 3.

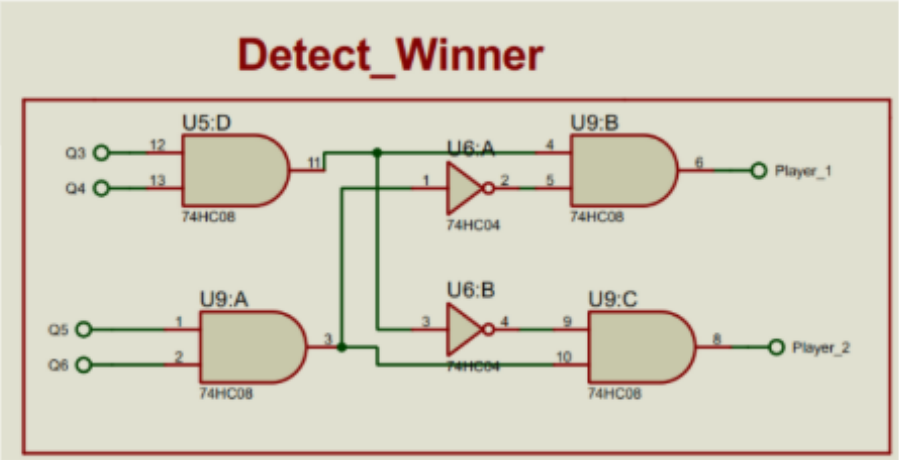

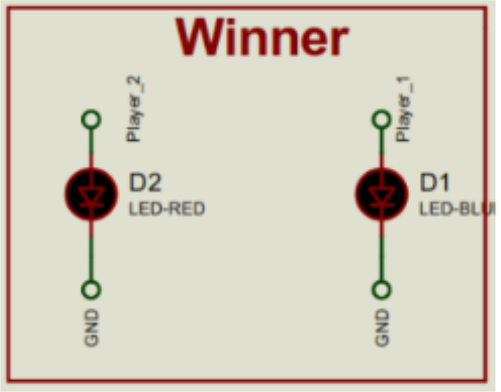

CATCH THE LED

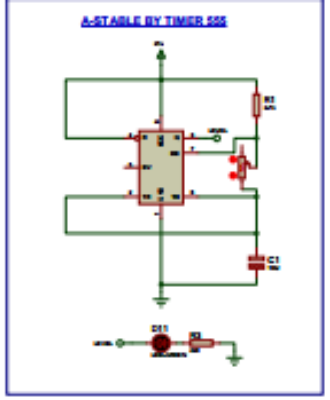

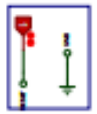

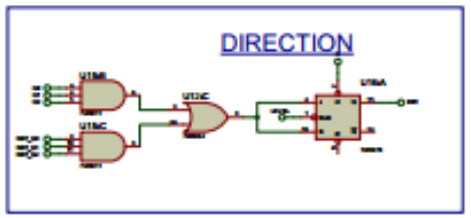

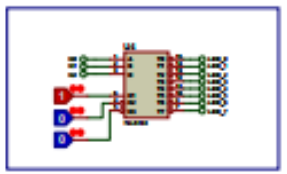

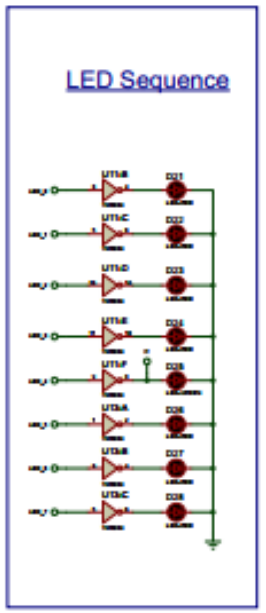

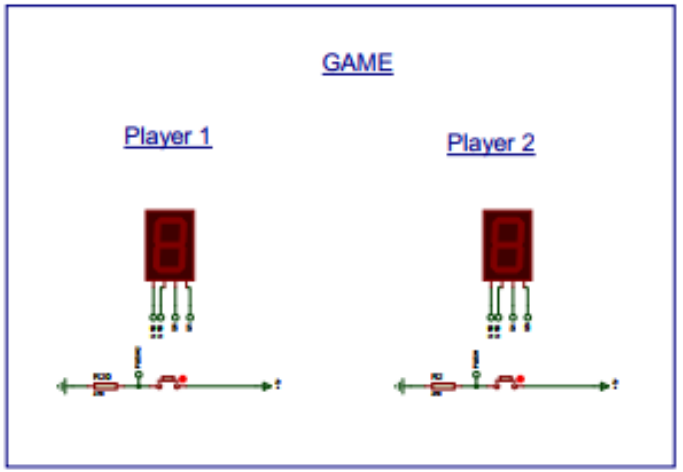

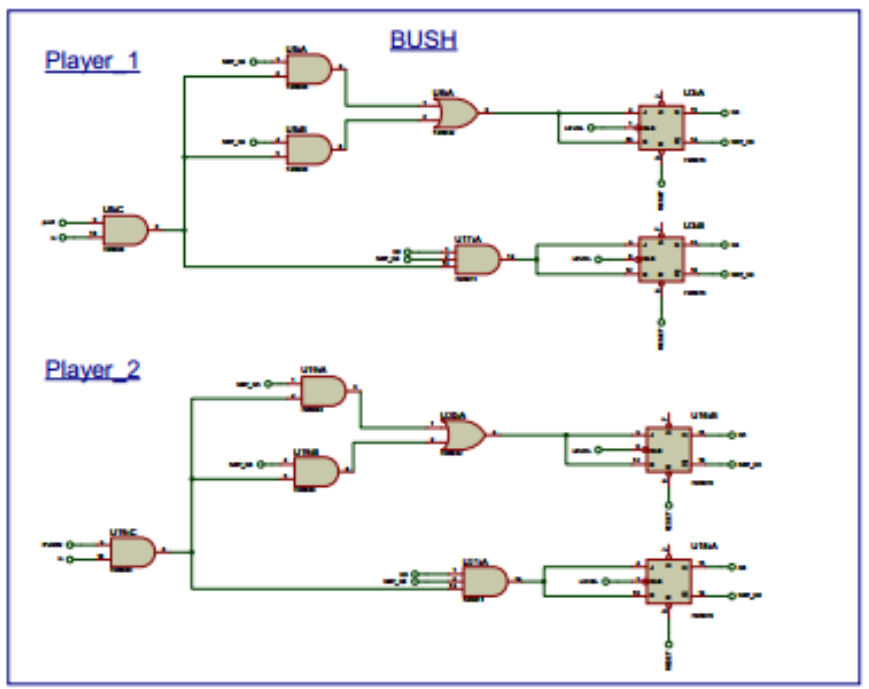

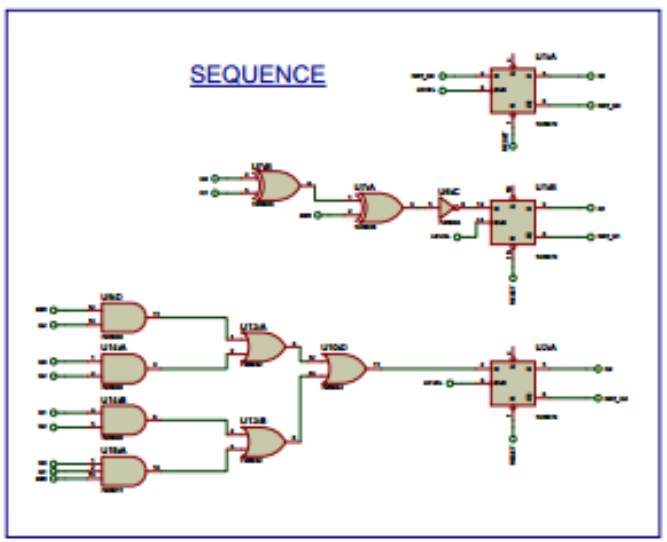

logic_progect_001 - Proteus 8 Professional - Schematic Capture

File Edit View Tool Design Graph Debug Library Template System Help

Schematic Capture

Device Selector - 1N4007

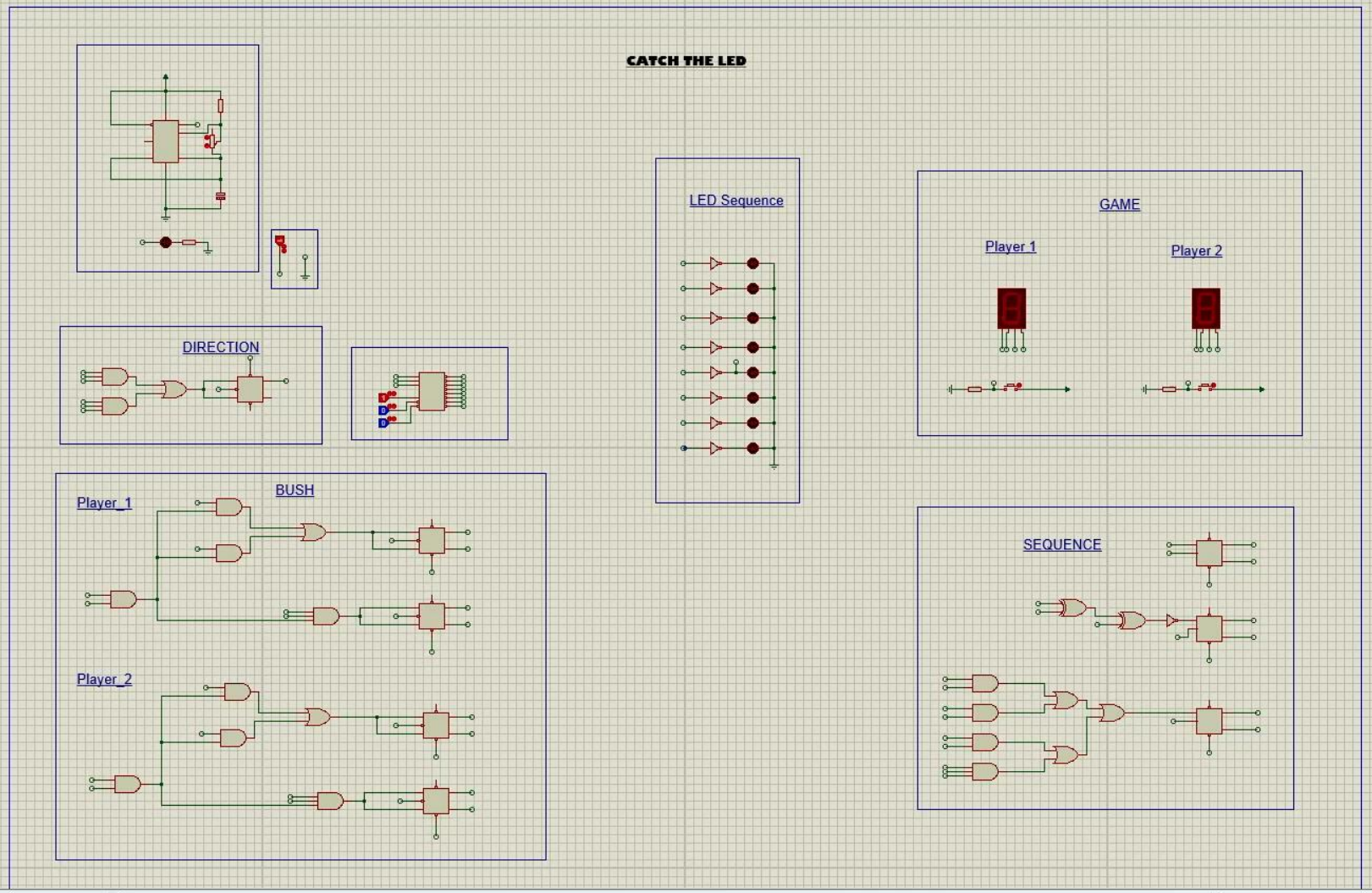

8 Message(s)

VSM debugging session has ended.

ENG 2:36 AM 5/13/2025

QUESTIONS?

NAMES

- AHMED TAREK ABDELHAMED
- Abdalla Yaser Mohamed
- Abdalla Reda Abdalla
- Abdelrhman Abdelhady Abdelrhman
- Abdelrhman Mohamed Saad
- Hesham El-Hosseini Mohamed
- Omar Ayman Mohamed
- Moataz Rafeek Hamdy
- Mohamed Abdou Elsayed Attalla

Catch the Green LED: A Sequential-Logic LED-Chasing Game

Acknowledgement

PROF. HOWIDA ABDELATIF

TA. HESHAM ABDALLA

Thank You!