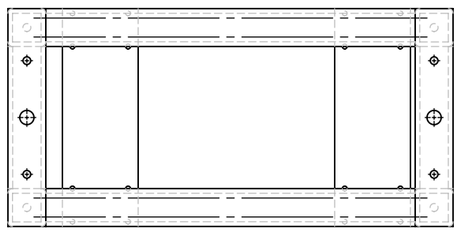

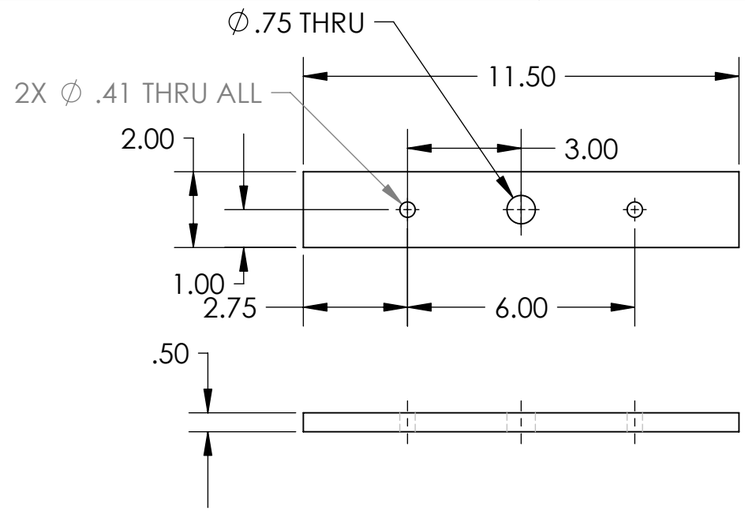

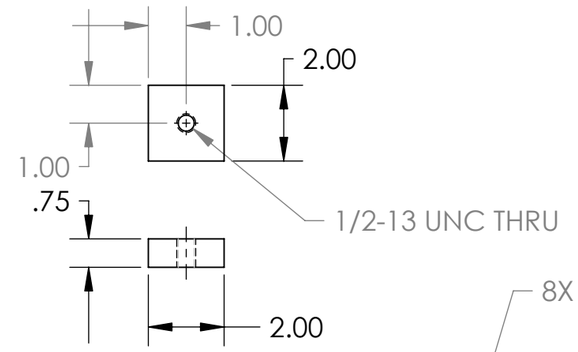

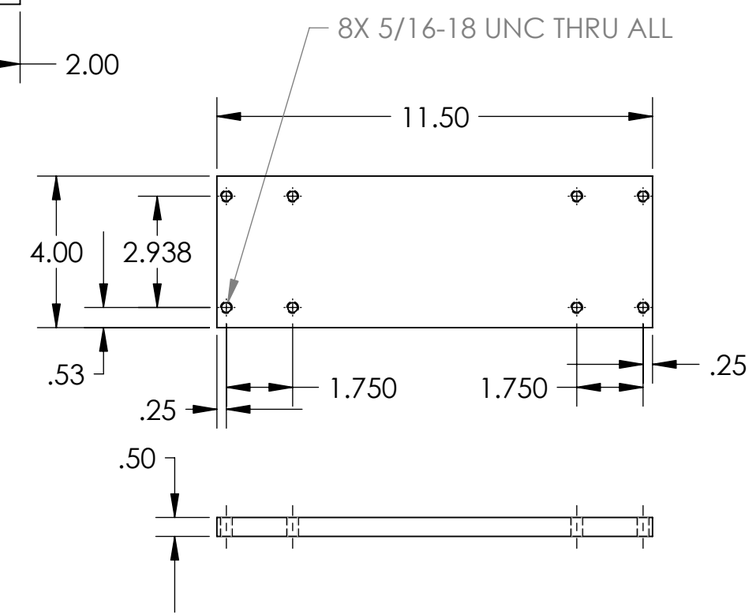

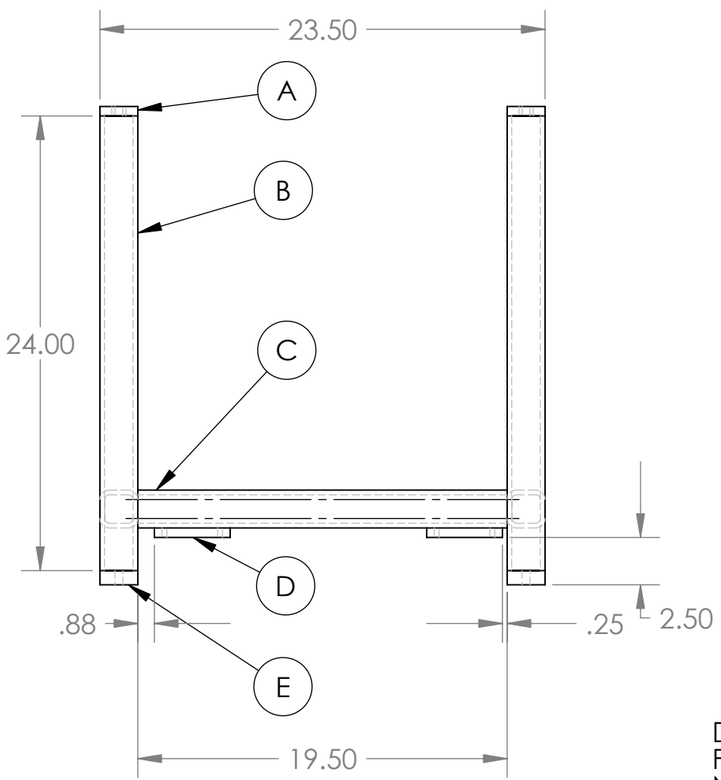

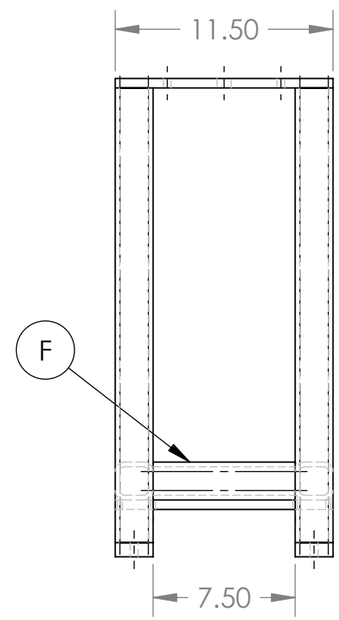

DET # 201
FRAME
NO. REQ'D: 1
MAT'L: WLMT
STK. SIZE: SEE LIST
HT. TREAT: NONE
FINISH: PAINT SAFETY BLUE

A - .50 X 2.00 X 11.50 HRS (2)
B - 1/4 X 2 X 2 X 24.00 TUBING (4)
C - 1/4 X 2 X 2 X 19.50 TUBING (2)
D - .50 X 4.00 X 11.50 HRS (2)
E - .75 X 2.00 X 2.00 HRS (4)
F - 1/4 X 2 X 2 X 7.50 TUBING (2)

	NAME	DATE
DRAWN	ELVI	12/18/2006

UNLESS OTHERWISE SPECIFIED:
DIMENSIONS ARE IN INCHES
TOLERANCES:
FRACTIONAL ± 1/16
ANGULAR: MACH ±.5 Deg.
TWO PLACE DECIMAL ±0.010
THREE PLACE DECIMAL ±0.005
FOUR PLACE DECIMAL ±0.0005
ALL MACHINED SURFACES
TO BE 125 RMS.
BREAK ALL CORNERS 0.015 UNLESS
OTHERWISE NOTED

DO NOT SCALE DRAWING

McSwain Engineering Inc.

CLIENT: MEI

TITLE: DROP TOWER FRAME

SIZE: B | DWG. NO.: MEI-201 | REV

SCALE: 1:8 | SHEET 2 OF 2