SAMSUNG PROPRIETARY
THIS DOCUMENT CONTAINS CONFIDENTIAL PROPRIETARY INFORMATION THAT IS SAMSUNG ELECTRONICS CO'S PROPERTY. DO NOT DISCLOSE TO OR DUPLICATE FOR OTHERS EXCEPT AS AUTHORIZED BY SAMSUNG.

BREMEN-M 15"/17"

CPU : Intel Arrandale
Chip Set : Intel Ibex Peak(HM55)
GFX : N11P/ M-GE1(40nm)
Remarks : Calpella Platform

Model Name	: BREMEN-M
PBA Name	: MAIN
PCB Code	: BA41-01174A
Dev. Step	: PR
Revision	: 1.0
T.R. Date	: 2009.11.12

Design	CHECK	APPROVAL

■ ***Owner : SEC Mobile R & D*** ***Signature :*** ***X***

Sheet 1. Cover
Sheet 2-6. Diagram (Block/Power) & Annotations
Sheet 7. Clock Generator -CK505 Shrink Version
Sheet 8 Thermal Sensor & FAN
Sheet 9-12 Arrandale CPU
Sheet 13. DDR3 SODIMM A
Sheet 14. DDR3 SODIMM B
Sheet 15-19. IBEX PEAK
Sheet 20-24. GFx_External_N11X
Sheet 25-28. Graphics_Memory_gDDR3 1g bit
Sheet 29. Graphic Strap
Sheet 30-32. Graphic Interface
Sheet 33-34. High Definition Audio (ALC269Q-GR)
Sheet 35. LAN_Marvell_88E8059
Sheet 36. Express_Card
Sheet 37. MultiCard_AU6336 (3 in 1)
Sheet 38. PCIE_Minicard_Slot (Half type only)
Sheet 39. SATA I/F CONN
Sheet 40. MICOM_MEC1308-NU
Sheet 41. Micom Glue Logic
Sheet 42. LED_Switch
Sheet 43. USB Port
Sheet 44. Touchpad LED
Sheet 45. USB Interface
Sheet 46. Charger
Sheet 47. PWR_3V_5V
Sheet 48. PWR_Calpella
Sheet 49. PWR_Memory
Sheet 50. PWR_CPU_VRM
Sheet 51. PWR_GFX_Ext
Sheet 52. PWR_MV_Switched
Sheet 53. PWR_MV_DisCharger
Sheet 54. 2 USB Port & Power S/W SUB B'D
Sheet 55. SATA ODD SUB B'D Battery IF B'D
Sheet 56. EMC Capacitor & ICT Port

Samsung Confidential

DRAW: MS YANG	DATE: 8/11/2009	TITLE: BREMEN-M MAIN COVER	SAMSUNG ELECTRONICS
CHECK: SE LEE	DEV. STEP: PV		
APPROVAL: MK KIM	REV: REV 0.9		PART NO.: BA41-01174A
MODULE CODE:	LAST EDIT: October 20, 2009 21:30:55 PM	PAGE 1 OF 56	

SAMSUNG PROPRIETARY
THIS DOCUMENT CONTAINS CONFIDENTIAL PROPRIETARY INFORMATION THAT IS SAMSUNG ELECTRONICS CO'S PROPERTY. DO NOT DISCLOSE TO OR DUPLICATE FOR OTHERS EXCEPT AS AUTHORIZED BY SAMSUNG.

BLOCK DIAGRAM

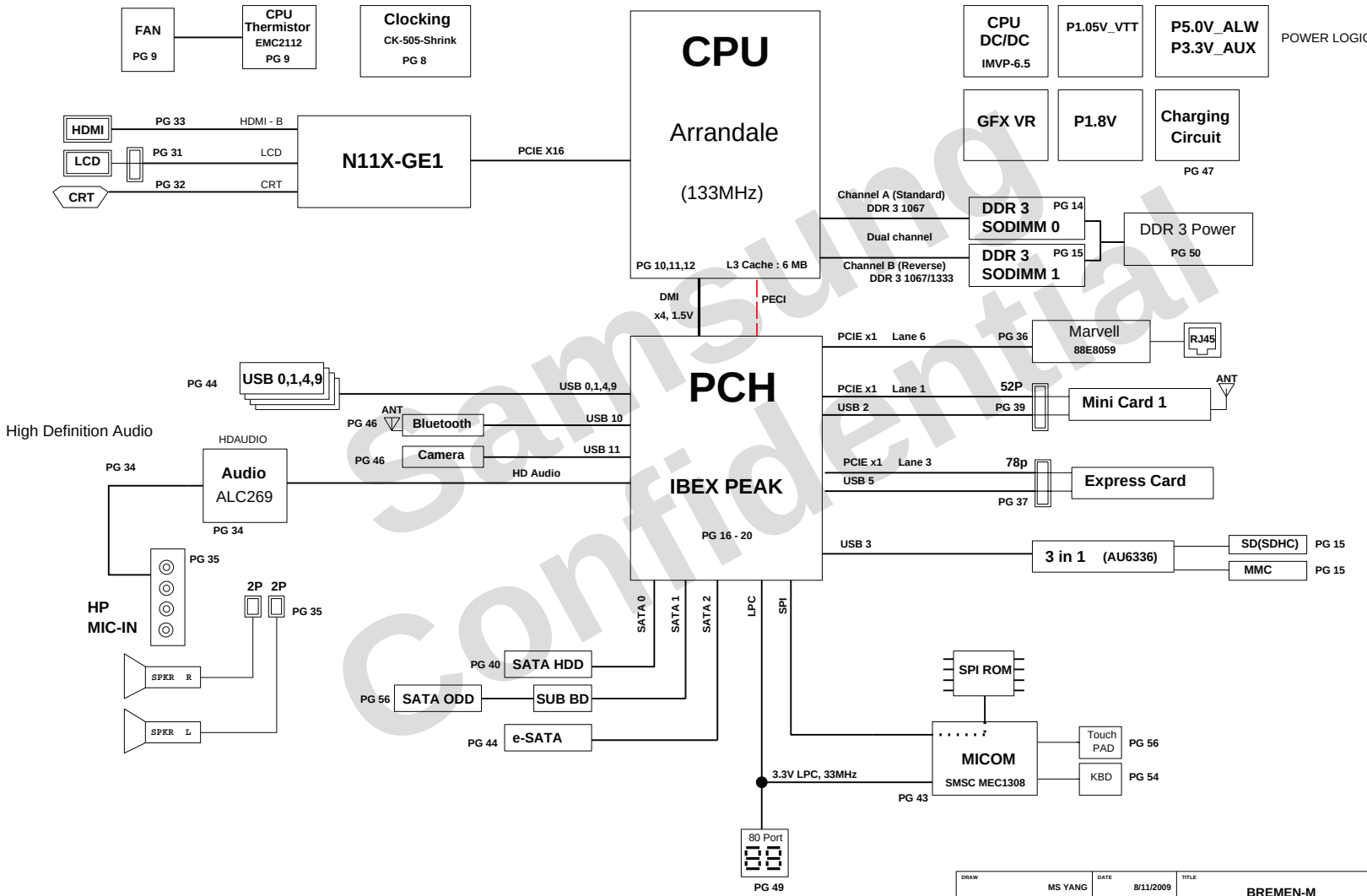

Samsung Confidential

DRAW: MS YANG	DATE: 8/11/2009	TITLE: BREMEN-M / MAIN / BLOCK DIAGRAM	SAMSUNG ELECTRONICS
CHECK: SE LEE	DEV. STEP: PV		
APPROVAL: MK KIM	REV: REV 0.9		PART NO.: BA41-01174A
MODULE CODE: undefined	LAST EDIT: October 20, 2009 21:30:55 PM	PAGE 2 OF 56	

SAMSUNG PROPRIETARY
THIS DOCUMENT CONTAINS CONFIDENTIAL PROPRIETARY INFORMATION THAT IS SAMSUNG ELECTRONICS CO'S PROPERTY. DO NOT DISCLOSE TO OR DUPLICATE FOR OTHERS EXCEPT AS AUTHORIZED BY SAMSUNG.

POWER DIAGRAM

Rev 0.1

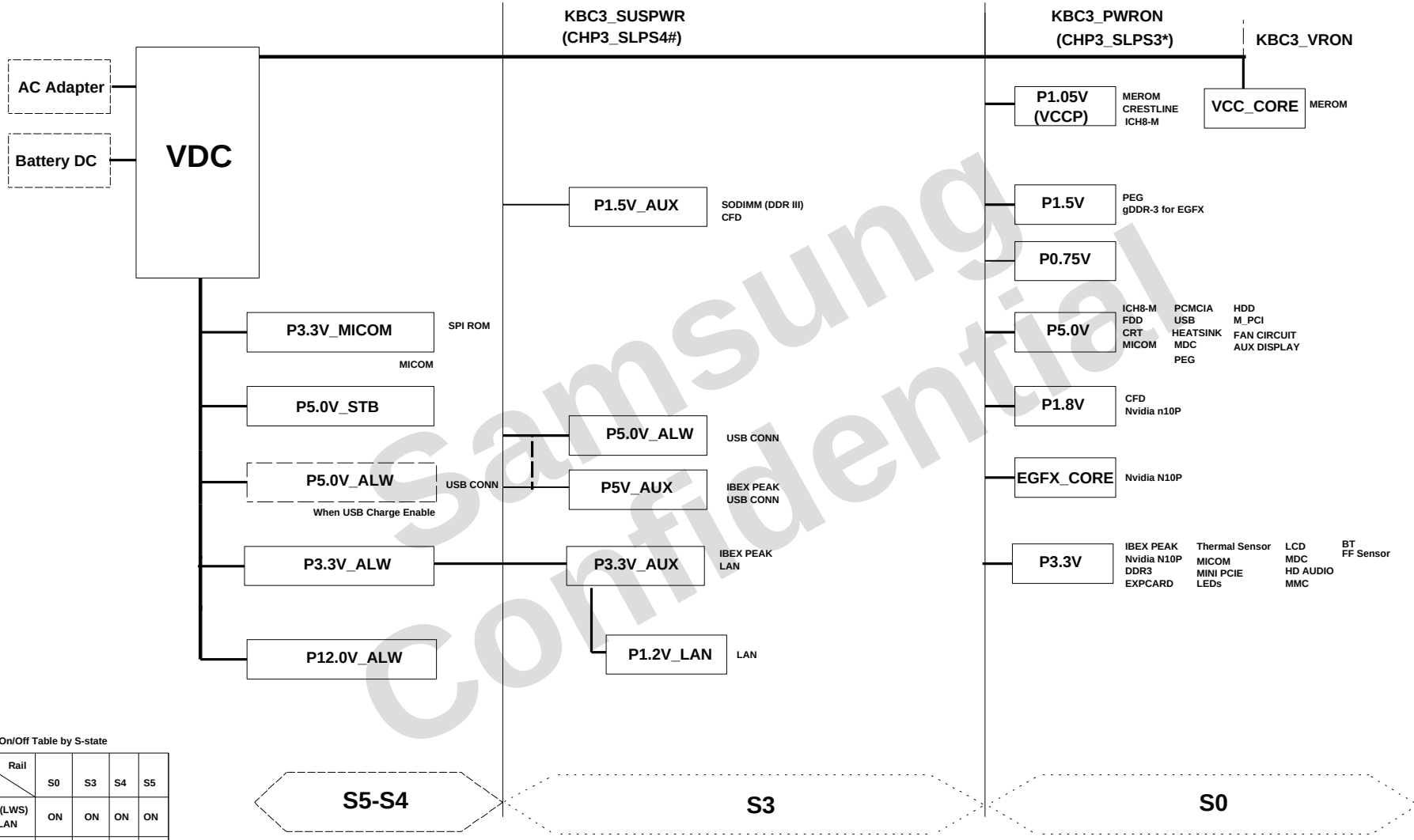

Power On/Off Table by S-state

Rail / State	S0	S3	S4	S5
+V*A(LWS) +V*LAN	ON	ON	ON	ON
+1.8V_AUX +0.9V	ON	ON	—	—
+V*AUX	ON	ON	—	—
+V	ON	—	—	—
+V* (CORE)	ON	—	—	—

DRAW: MS YANG	DATE: 8/11/2009	TITLE: BREMEN-M / MAIN / POWER DIAGRAM	SAMSUNG ELECTRONICS
CHECK: SE LEE	DEV. STEP: PV		
APPROVAL: MK KIM	REV: REV 0.9		PART NO.: BA41-01174A
MODULE CODE: undefined	LAST EDIT: October 20, 2009 21:30:55 PM	PAGE 3 OF 56	

Samsung Confidential

SAMSUNG PROPRIETARY

THIS DOCUMENT CONTAINS CONFIDENTIAL PROPRIETARY INFORMATION THAT IS SAMSUNG ELECTRONICS CO'S PROPERTY. DO NOT DISCLOSE TO OR DUPLICATE FOR OTHERS EXCEPT AS AUTHORIZED BY SAMSUNG.

POWER RAILS ANALYSIS

Rev. 0.6 (060920)

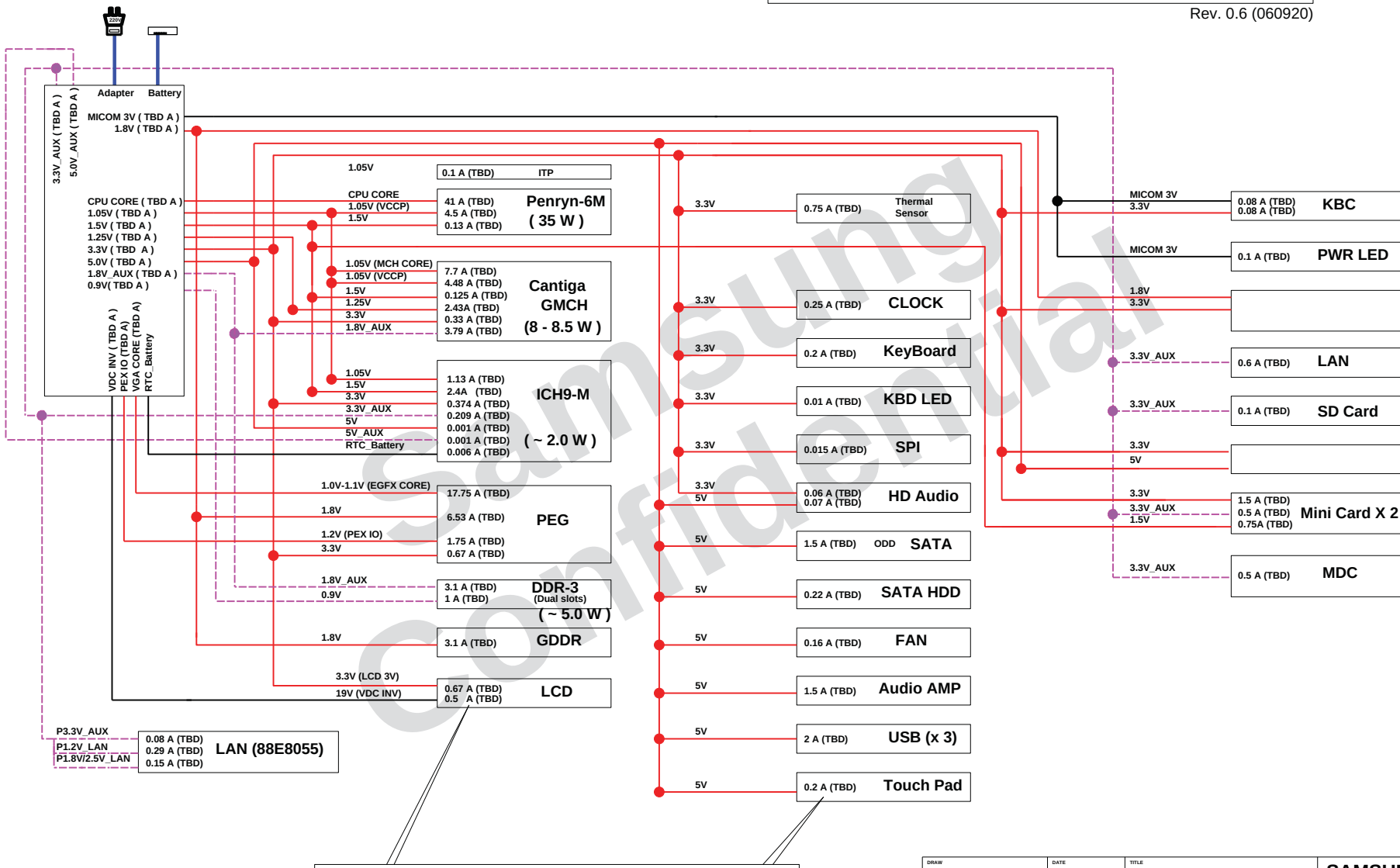

Value by Datasheet/Application notes (Value by measurement)

DRAW: MS YANG	DATE: 8/11/2009	TITLE: BREMEN-M / MAIN / POWER RAILS	SAMSUNG ELECTRONICS
CHECK: SE LEE	DEV. STEP: PV		
APPROVAL: MK KIM	REV: REV 0.9		PART NO.: BA41-01174A
MODULE CODE: undefined	LAST EDIT: October 20, 2009 21:30:55 PM	PAGE 4 OF 56	

Samsung Confidential

SAMSUNG PROPRIETARY
THIS DOCUMENT CONTAINS CONFIDENTIAL PROPRIETARY INFORMATION THAT IS SAMSUNG ELECTRONICS CO'S PROPERTY. DO NOT DISCLOSE TO OR DUPLICATE FOR OTHERS EXCEPT AS AUTHORIZED BY SAMSUNG.

PRELIMINARY

POWER SEQUENCE

Rev. 0.5

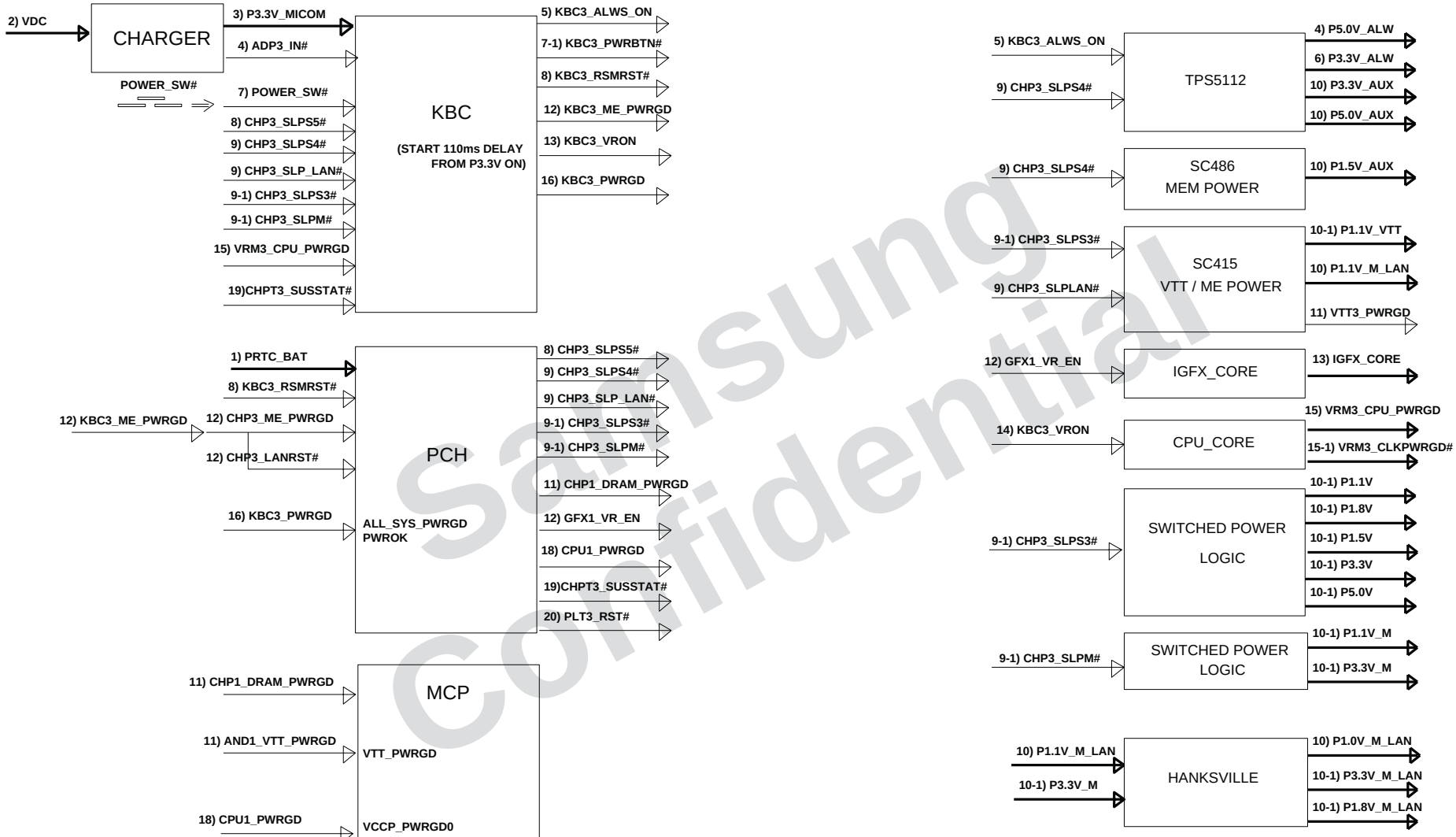

Samsung Confidential

DRAW: MS YANG	DATE: 8/11/2009	TITLE: BREMEN-M MAIN POWER SEQUENCE	SAMSUNG ELECTRONICS
CHECK: SE LEE	DEV. STEP: PV		
APPROVAL: MK KIM	REV: REV 0.9		PART NO.: BA41-01174A
MODULE CODE: undefined	LAST EDIT: October 20, 2009 21:30:55 PM	PAGE 5 OF 56	

SAMSUNG PROPRIETARY
THIS DOCUMENT CONTAINS CONFIDENTIAL PROPRIETARY INFORMATION THAT IS SAMSUNG ELECTRONICS CO'S PROPERTY. DO NOT DISCLOSE TO OR DUPLICATE FOR OTHERS EXCEPT AS AUTHORIZED BY SAMSUNG.

CLOCK DISTRIBUTION Rev. 0.1

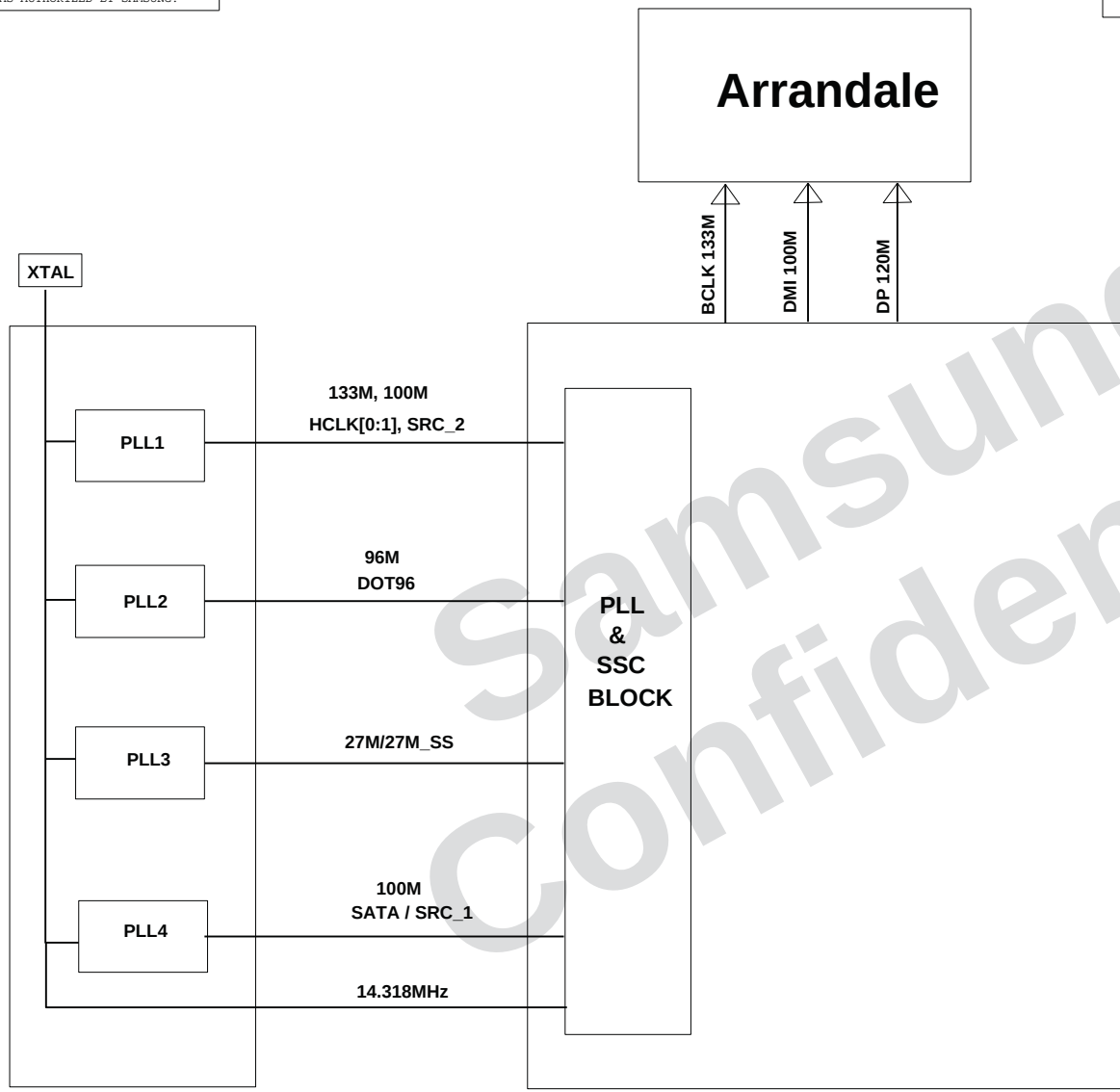

Samsung Confidential

DRAW: MS YANG	DATE: 8/11/2009	TITLE: BREMEN-M / MAIN / CLOCK DIAGRAM	SAMSUNG ELECTRONICS
CHECK: SE LEE	DEV. STEP: PV		
APPROVAL: MK KIM	REV: REV 0.9		PART NO.: BA41-01174A
MODULE CODE: undefined	LAST EDIT: October 20, 2009 21:30:55 PM	PAGE 6 OF 56	

SAMSUNG PROPRIETARY
THIS DOCUMENT CONTAINS CONFIDENTIAL PROPRIETARY INFORMATION THAT IS SAMSUNG ELECTRONICS CO'S PROPERTY. DO NOT DISCLOSE TO OR DUPLICATE FOR OTHERS EXCEPT AS AUTHORIZED BY SAMSUNG.

CK505M SHRINK VERSION

CPU_MODE SEL

Pin 30	CPU_0	CPU_1
CPU_SEL = 0	133MHz	133MHz

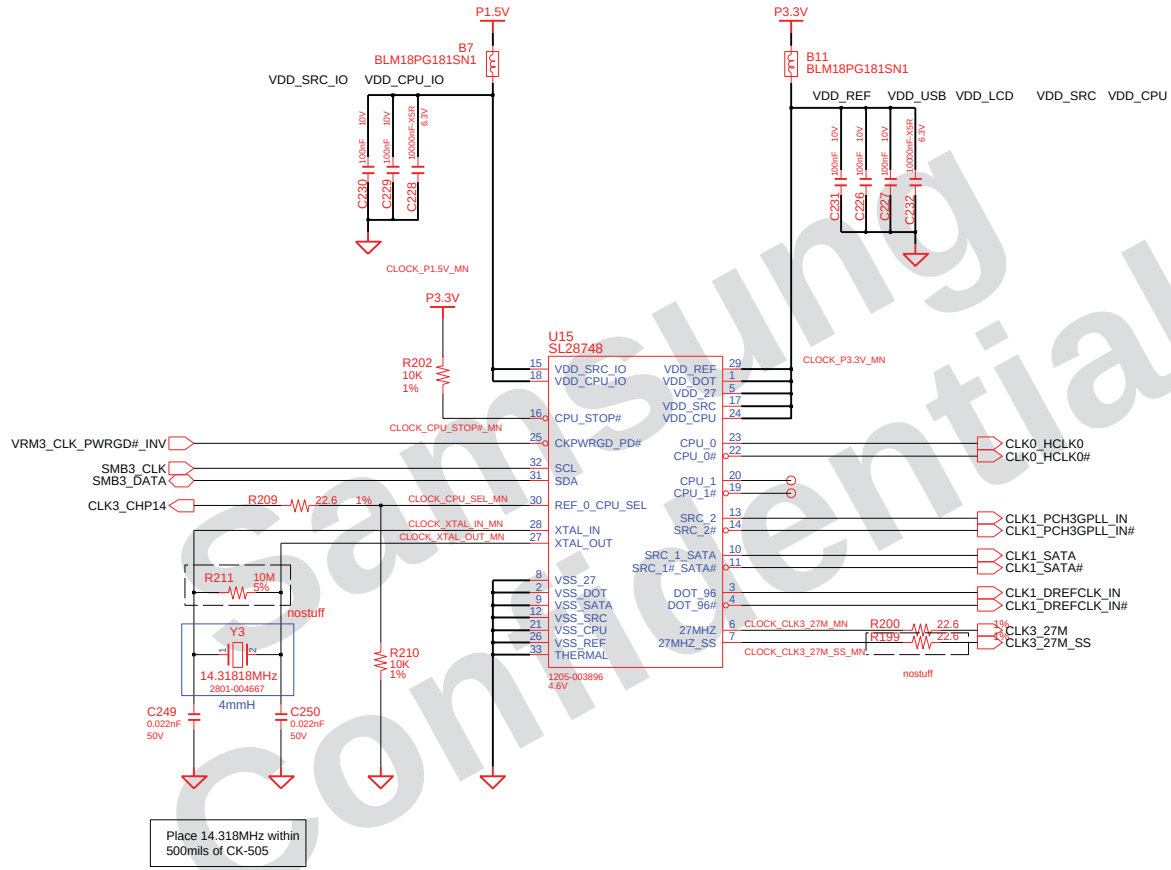

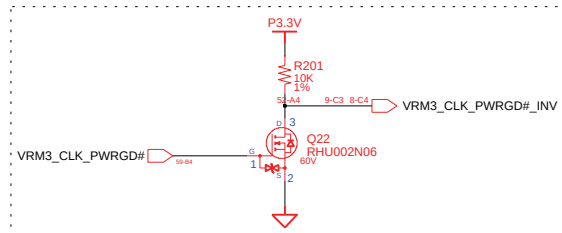

Samsung Confidential

DESIGN: MS YANG	DATE: 8/11/2009	TITLE: BREMEN-M CLOCK CK505-SHRINK	SAMSUNG ELECTRONICS
CHECK: SE LEE	DEV. STEP: PV		
APPROVAL: MK KIM	REV: REV 0.9		PART NO.: BA41-01174A
MODULE CODE:	LAST EDIT: October 20, 2009 21:30:55 PM	PAGE 7 OF 56	

SAMSUNG PROPRIETARY
THIS DOCUMENT CONTAINS CONFIDENTIAL PROPRIETARY INFORMATION THAT IS SAMSUNG ELECTRONICS CO'S PROPERTY. DO NOT DISCLOSE TO OR DUPLICATE FOR OTHERS EXCEPT AS AUTHORIZED BY SAMSUNG.

THERMAL SENSOR & FAN CONTROL

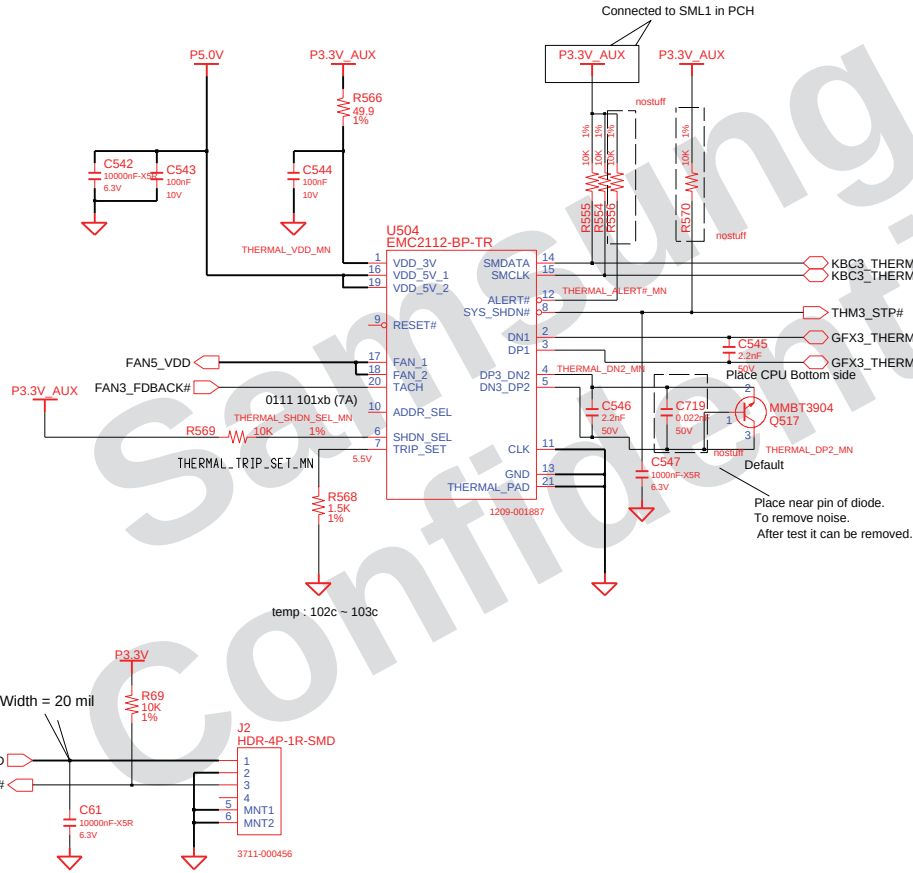

ADDRESSS_SEL MODE	
0	0101 111xb
✓ HIGH Z	0111 101xb (7A)
1	0101 110xb

SHDN_SEL MODE	
0	INTEL TR MODE
HIGH Z	AMD CPU/DIODE MODE
✓ 1	EXT.DIODE 2 MODE

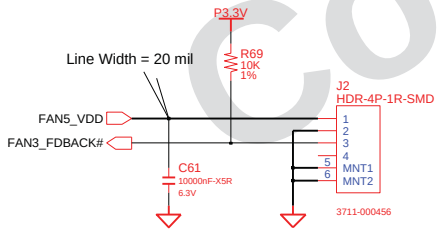

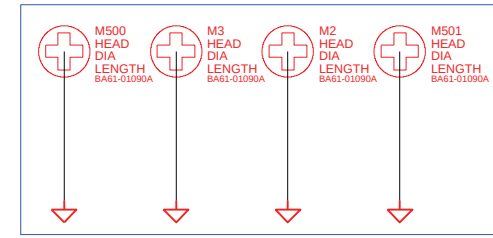

To support heatsink

Samsung Confidential

DESIGN: MS YANG	DATE: 8/11/2009	TITLE: BREMEN-M THERMAL SENSOR THERMAL SENSOR EMC2112	SAMSUNG ELECTRONICS
CHECK: SE LEE	DEV. STEP: PV		
APPROVAL: MK KIM	REV: REV 0.9		PART NO.: BA41-01174A
MODULE CODE:	LAST EDIT: October 20, 2009 21:30:55 PM	PAGE 8 OF 56	

SAMSUNG PROPRIETARY

THIS DOCUMENT CONTAINS CONFIDENTIAL PROPRIETARY INFORMATION THAT IS SAMSUNG ELECTRONICS CO'S PROPERTY. DO NOT DISCLOSE TO OR DUPLICATE FOR OTHERS EXCEPT AS AUTHORIZED BY SAMSUNG.

ARRANDALE PROCESSOR (DMI,PEG, FDI)

CPU1-1
ARD/CFD_PGA 1 / 5

DMI1_TXN(0:3)
DMI1_TXP(0:3)
DMI1_RXN(0:3)
DMI1_RXP(0:3)

DMI_RX#_0 DMI_RX#_1 DMI_RX#_2 DMI_RX#_3
DMI_RX_0 DMI_RX_1 DMI_RX_2 DMI_RX_3
DMI_TX#_0 DMI_TX#_1 DMI_TX#_2 DMI_TX#_3
DMI_TX_0 DMI_TX_1 DMI_TX_2 DMI_TX_3

DMI

FDI_TX#_0 FDI_TX#_1 FDI_TX#_2 FDI_TX#_3 FDI_TX#_4 FDI_TX#_5 FDI_TX#_6 FDI_TX#_7
FDI_TX_0 FDI_TX_1 FDI_TX_2 FDI_TX_3 FDI_TX_4 FDI_TX_5 FDI_TX_6 FDI_TX_7
FDI_FSYNC_0 FDI_FSYNC_1
FDI_INT
FDI_LSYNC_0 FDI_LSYNC_1

CPU_FDI_FSYNC_MN
R143 1K 1%

Tie GND through 1K
in case discrete gfx design

Intel (R) FDI

PCI EXPRESS -- GRAPHICS

CPU_COMP_MN
R116 49.9 1%
R117 750 1%
CPU_PEG_RBIAS_MN
PEG1_RXN(15:0)
PEG1_RXP(15:0)
PEG1_TXN_C(15:0)
PEG1_TXP_C(15:0)

PEG_ICOMPI PEG_ICOMPO PEG_RCOMPO PEG_RBIAS
PEG_RX#_0 PEG_RX#_1 PEG_RX#_2 PEG_RX#_3 PEG_RX#_4 PEG_RX#_5 PEG_RX#_6 PEG_RX#_7 PEG_RX#_8 PEG_RX#_9 PEG_RX#_10 PEG_RX#_11 PEG_RX#_12 PEG_RX#_13 PEG_RX#_14 PEG_RX#_15
PEG_RX_0 PEG_RX_1 PEG_RX_2 PEG_RX_3 PEG_RX_4 PEG_RX_5 PEG_RX_6 PEG_RX_7 PEG_RX_8 PEG_RX_9 PEG_RX_10 PEG_RX_11 PEG_RX_12 PEG_RX_13 PEG_RX_14 PEG_RX_15
PEG_TX#_0 PEG_TX#_1 PEG_TX#_2 PEG_TX#_3 PEG_TX#_4 PEG_TX#_5 PEG_TX#_6 PEG_TX#_7 PEG_TX#_8 PEG_TX#_9 PEG_TX#_10 PEG_TX#_11 PEG_TX#_12 PEG_TX#_13 PEG_TX#_14 PEG_TX#_15
PEG_TX_0 PEG_TX_1 PEG_TX_2 PEG_TX_3 PEG_TX_4 PEG_TX_5 PEG_TX_6 PEG_TX_7 PEG_TX_8 PEG_TX_9 PEG_TX_10 PEG_TX_11 PEG_TX_12 PEG_TX_13 PEG_TX_14 PEG_TX_15

0902-002514

Copy of internal CPU_RST#

CPU_COMP3_MN R139 20 1% AT23 COMP3
CPU_COMP2_MN R140 20 1% AT24 COMP2
CPU_COMP1_MN R142 49.9 1% G16 COMP1
CPU_COMP0_MN R141 49.9 1% AT26 COMP0
P1.05V_VTT
AH24 SKTOCC#
CPU_CATERR#_MN R679 49.9 1% AK14 CATERR#
CHP3_PECI AT15 PECI
P1.05V_VTT CPU_PROCHOT#_MN R617 49.9 1% AN26 PROCHOT#
MCP1_THRMTRIP# AK15 THERMTRIP#

MISC
THERMAL
DDR3 MISC

CPU_RESET_CBS#_MN AP26 RESET_OBS#
CHP3_PMSYNC AL15 PM_SYNC
CPU1_PWRGD AN14 VCCPWRGOOD_1
AN27 VCCPWRGOOD_0
CHP1_DRAM_PWRGD AK13 SM_DRAMPWROK
VTT3_PWRGD R672 2K 1% CPU_VTTPWRGOOD_MN AM15 VTTPWRGOOD
R673 1.5K 1%
Intel : 2k, 1K (1.05V Vih)
AM26 TAPPWRGOOD
PLT3_RST# R674 1.5K 1% AL14 RSTIN#
CPU_PLT3_RST#_MN
R678 750 1%

PWR MANAGEMENT
JTAG & MBP

BCLK A16 CLK0_BCLK_CPU
BCLK# B16 CLK0_BCLK_CPU#
BCLK_ITP AR30
BCLK_ITP# AT30
PEG_CLK E16 CLK1_PCH3GPLL_OUT
PEG_CLK# D16 CLK1_PCH3GPLL_OUT#
DPLL_REF_SSCLK A18
DPLL_REF_SSCLK# A17
Connect to GND Directly in case discrete GFX model.

CLOCKS

SM_DRAMRST# F6 MCP1_DRAMRST#_DRIVE
SM_RCOMP_0 AL1 R690 100 1% CPU_RCOMP_0_MN
SM_RCOMP_1 AM1 R689 24.9 1% CPU_RCOMP_1_MN
SM_RCOMP_2 AN1 R691 130 1% CPU_RCOMP_2_MN
P1.05V_VTT R677 10K 1% R676 10K 1%
PM_EXT_TS#_0 AN15
PM_EXT_TS#_1 AP15

PRDY# AT28
PREQ# AP27
TCK AN28 CPU_TCK_MN R619 49.9 nostuff 1%
TMS AP28
TRST# AT27
TDI AT29
TDO AR27 CPU_TDO_MN
TDI_M AR29
TDO_M AP29
DBR# AN25
BPM#_0 AJ22
BPM#_1 AK22
BPM#_2 AK24
BPM#_3 AJ24
BPM#_4 AJ25
BPM#_5 AH22
BPM#_6 AK23
BPM#_7 AH23

PEG1_TXN_C(15:0) → PEG1_TXN(15:0)
PEG1_TXP_C(15:0) → PEG1_TXP(15:0)

C92 C88 C89 C553 C599 C556 C597 C557 C600 C602 C559 C604 C608 C606 C115 C113
C91 C87 C90 C554 C598 C555 C596 C558 C601 C603 C560 C605 C609 C607 C116 C112
100nF 10V

CHP1_DRAM_PWRGD
P1.5V_AUX P1.5V
R1106 1.1K 1% nostuff
R154 1.1K 1%
C1106 1000nF-X5R 25V
R675 3.01K 1%
1.1K ohm / 3.01K ohm
P3.3V_AUX
Q536 BSS138 50V
Q537 BSS138 50V
R1107 100K 1%
R1108 10K 1%
C1109 47nF 50V
P1.5V
nostuff

MT508 RMNT-38-70-1P
MT505 RMNT-38-70-1P
MT507 RMNT-38-70-1P
MT504 RMNT-38-70-1P
CPU mount

DRAW: MS YANG	DATE: 8/11/2009	TITLE: BREMEN-M CPU ARRANDALE (1/4)	SAMSUNG ELECTRONICS
CHECK: SE LEE	DEV. STEP: PV		
APPROVAL: MK KIM	REV: REV 0.9		PART NO.: BA41-01174A
MODULE CODE: undefined	LAST EDIT: October 20, 2009 21:30:55 PM	PAGE 9 OF 56	

Samsung Confidential

SAMSUNG PROPRIETARY

THIS DOCUMENT CONTAINS CONFIDENTIAL PROPRIETARY INFORMATION THAT IS SAMSUNG ELECTRONICS CO'S PROPERTY. DO NOT DISCLOSE TO OR DUPLICATE FOR OTHERS EXCEPT AS AUTHORIZED BY SAMSUNG.

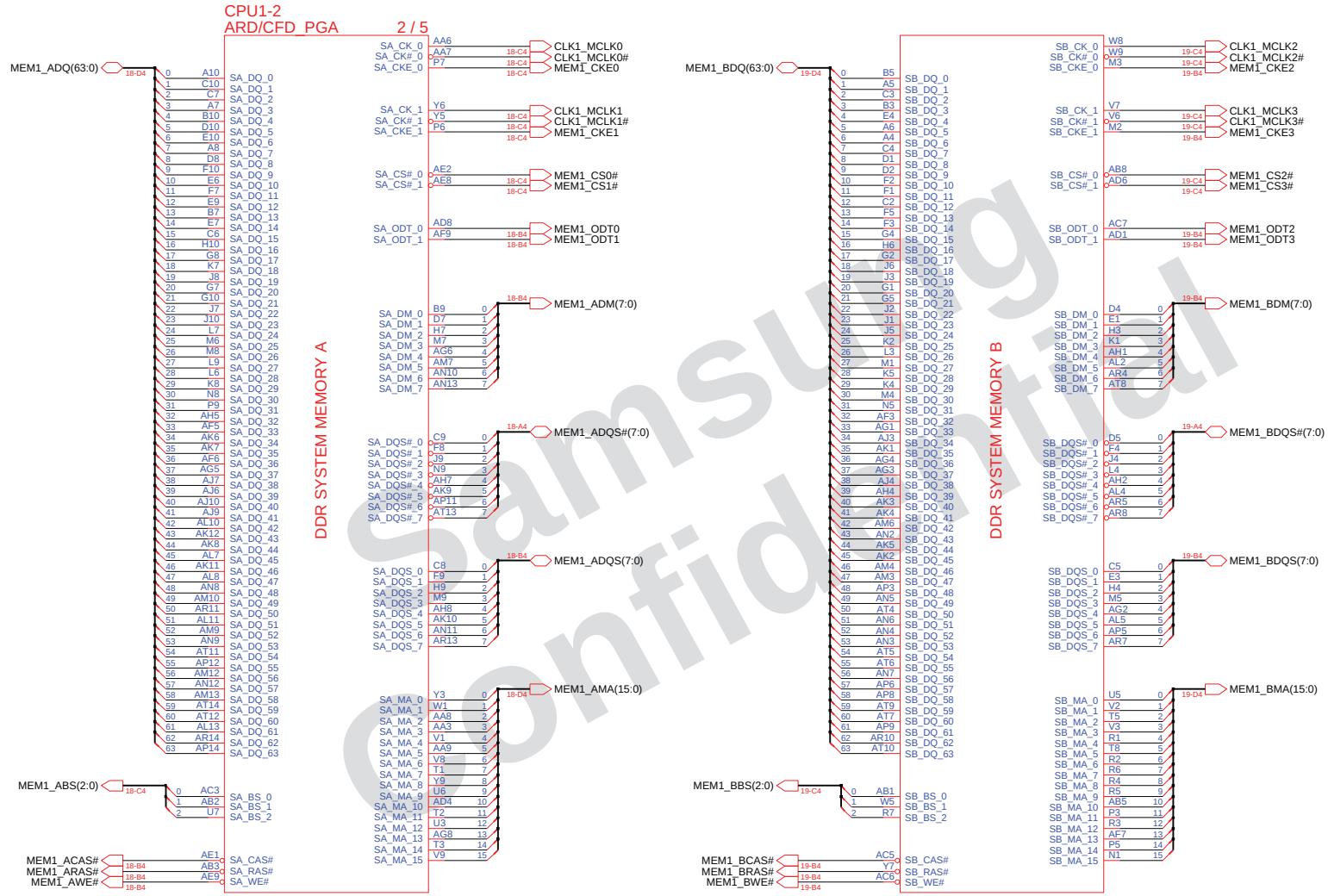

Samsung Confidential

DRAW: MS YANG	DATE: 8/11/2009	TITLE: BREMEN-M CPU ARRANDALE (2/4)	SAMSUNG ELECTRONICS
CHECK: SE LEE	DEV. STEP: PV		
APPROVAL: MK KIM	REV: REV 0.9		PART NO.: BA41-01174A
MODULE CODE: undefined	LAST EDIT: October 20, 2009 21:30:55 PM	PAGE 10 OF 56	

SAMSUNG PROPRIETARY

THIS DOCUMENT CONTAINS CONFIDENTIAL PROPRIETARY INFORMATION THAT IS SAMSUNG ELECTRONICS CO'S PROPERTY. DO NOT DISCLOSE TO OR DUPLICATE FOR OTHERS EXCEPT AS AUTHORIZED BY SAMSUNG.

ALL VTT DECAP IS SHARED

4x 470 uF : CPU VR side

CPU_CORE

CPU1-3
ARD/CFD_PGA 3 / 5

CPU CORE SUPPLY POWER

1.1V RAIL POWER

P1.05V_VTT

CPU1-4
ARD/CFD_PGA 4 / 5

GRAPHICS POWER

GRAPHICS VIDs

SENSE LINES

DDR3 - 1.5V RAILS POWER

FDI

PEG & DMI

1.1V

1.8V

ADD 1K PD in discrete GFX design

Stuff/NoStuff Check ?

(depends on placement)

2A ROUTING NEEDED.

CPU VIDS

SENSE LINES

VTT_SEL	VOLTAGE	CPU
1	**P1.05V**	**ARRANDALE**
0	P1.1V	CLARKS FIELD

VTT_SEL signal (for CFD/ARD shared)

0902-002514

DESIGN: MS YANG	DATE: 8/11/2009	TITLE: BREMEN-M CPU ARRANDALE (3/4)	SAMSUNG ELECTRONICS
CHECK: SE LEE	DEV. STEP: PV		PART NO.: BA41-01174A
APPROVAL: MK KIM	REV: REV 0.9		
MODULE CODE:	LAST EDIT: October 20, 2009 21:30:55 PM	PAGE 11 OF 56	

Samsung Confidential

SAMSUNG PROPRIETARY
THIS DOCUMENT CONTAINS CONFIDENTIAL PROPRIETARY INFORMATION THAT IS SAMSUNG ELECTRONICS CO'S PROPERTY. DO NOT DISCLOSE TO OR DUPLICATE FOR OTHERS EXCEPT AS AUTHORIZED BY SAMSUNG.

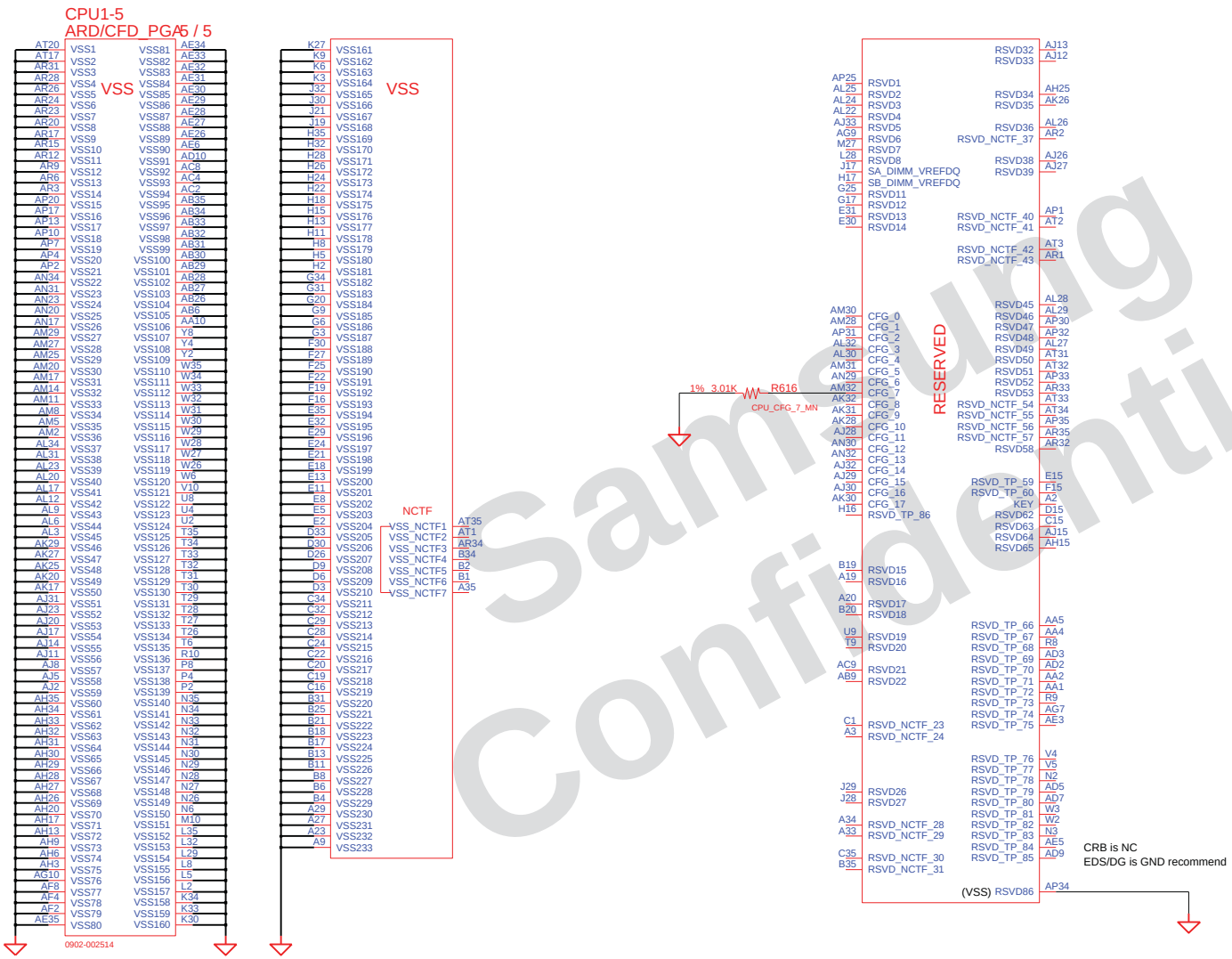

CFG Straps for Processor

PCI Express Configuration Select	
CFG0	1 : Single PEG 0 : Bifunction enabled

PCI Express Static Lane Reversal	
CFG3	1 : Normal operation 0 : Lane Reversed

Display Port Presence	
CFG4	1 : Disabled - No DP device is connected to eDP 0 : Enabled - (DP device is connected to eDP

PCIE 2.O SUPPORT	
CFG7	1 : Normal operation 0 : PCIE2.0 Jitter support

Samsung Confidential

DRAW: MS YANG	DATE: 8/11/2009	TITLE: BREMEN-M CPU ARRANDALE (4/4)	SAMSUNG ELECTRONICS
CHECK: SE LEE	DEV. STEP: PV		
APPROVAL: MK KIM	REV: REV 0.9		PART NO.: BA41-01174A
MODULE CODE: undefined	LAST EDIT: October 20, 2009 21:30:55 PM		PAGE 12 OF 56

SAMSUNG PROPRIETARY
THIS DOCUMENT CONTAINS CONFIDENTIAL PROPRIETARY INFORMATION THAT IS SAMSUNG ELECTRONICS CO'S PROPERTY. DO NOT DISCLOSE TO OR DUPLICATE FOR OTHERS EXCEPT AS AUTHORIZED BY SAMSUNG.

DDR SO-DIMM #0

Height : 4 mm (STANDARD)

P/N : 3709-001532 (Molex)
P/N : 3709-001560 (Foxconn)

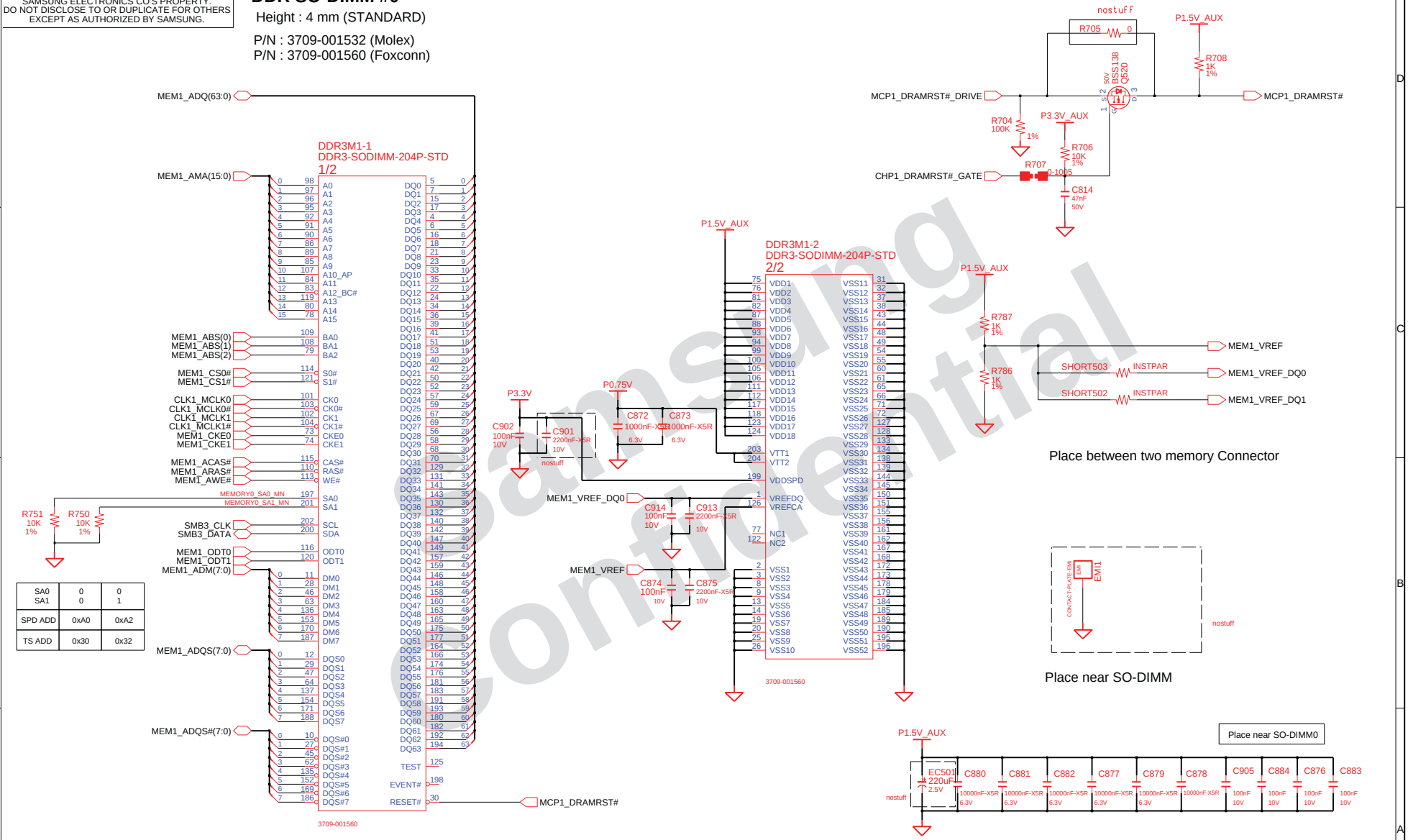

Samsung Confidential

DRAW MS YANG	DATE 8/11/2009	TITLE BREMEN-M SODIMM A DDR3
CHECK SE LEE	DEV. STEP PV	SAMSUNG ELECTRONICS
APPROVAL MK KIM	REV REV 0.9	PART NO. BA41-01174A
MODULE CODE	LAST EDIT October 20, 2009 21:30:55 PM	PAGE 13 OF 56

SAMSUNG PROPRIETARY
THIS DOCUMENT CONTAINS CONFIDENTIAL PROPRIETARY INFORMATION THAT IS SAMSUNG ELECTRONICS CO'S PROPERTY. DO NOT DISCLOSE TO OR DUPLICATE FOR OTHERS EXCEPT AS AUTHORIZED BY SAMSUNG.

DDR SO-DIMM #1

Height : 4 mm (REVERSE)

P/N : 3709-001533 (Molex)
P/N : 3709-001559 (Foxconn)

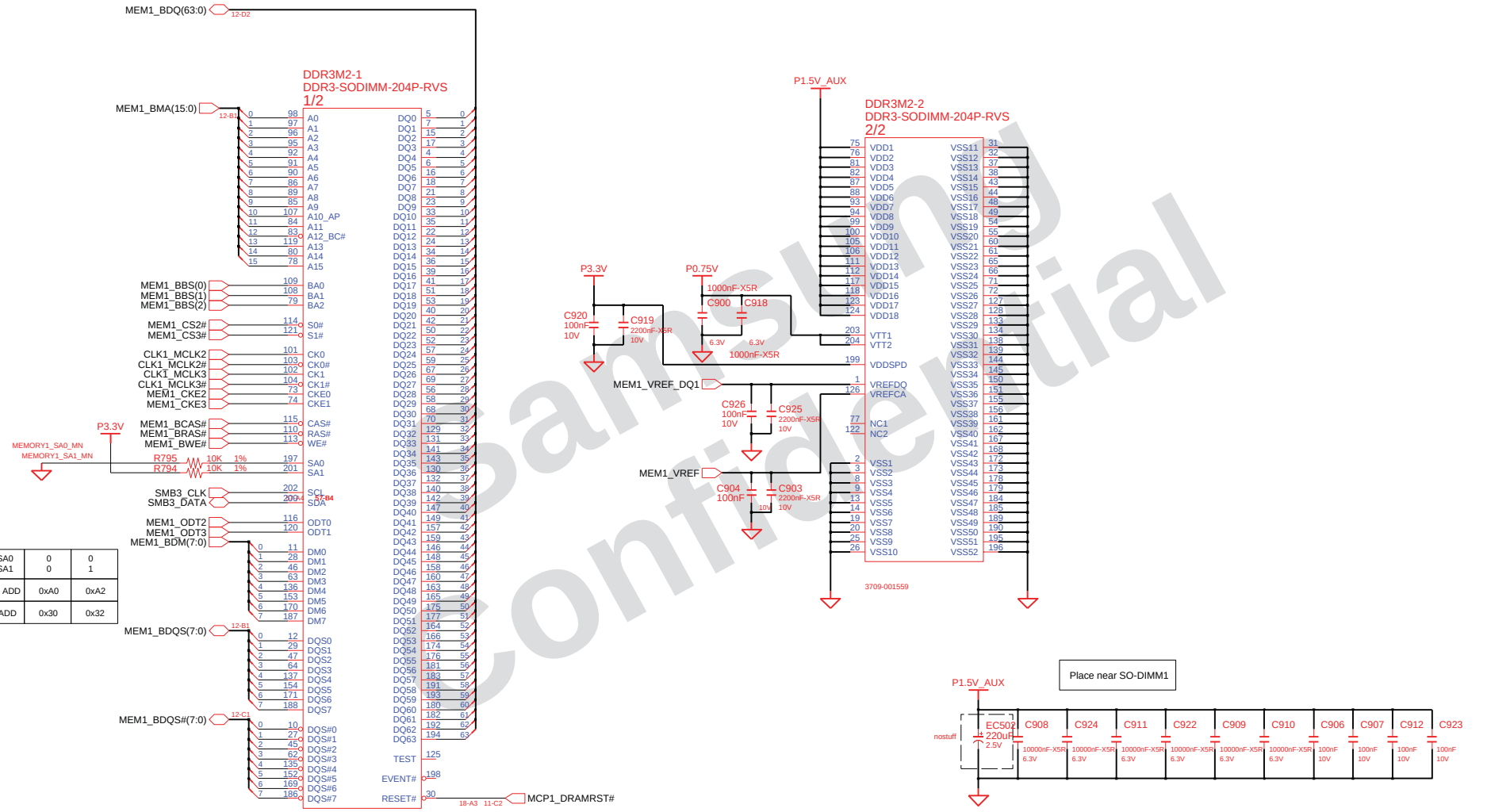

SA0 SA1	0 0	0 1
SPD ADD	0xA0	0xA2
TS ADD	0x30	0x32

DRAW	MS YANG	DATE	8/11/2009	TITLE	BREMEN-M SODIMM B DDR3
CHECK	SE LEE	DEV. STEP	PV		
APPROVAL	MK KIM	REV	REV 0.9		
MODULE CODE		LAST EDIT	October 20, 2009 21:30:55 PM		

SAMSUNG ELECTRONICS
PART NO. BA41-01174A
PAGE 14 OF 56

Samsung Confidential

SAMSUNG PROPRIETARY
THIS DOCUMENT CONTAINS CONFIDENTIAL PROPRIETARY INFORMATION THAT IS SAMSUNG ELECTRONICS CO'S PROPERTY. DO NOT DISCLOSE TO OR DUPLICATE FOR OTHERS EXCEPT AS AUTHORIZED BY SAMSUNG.

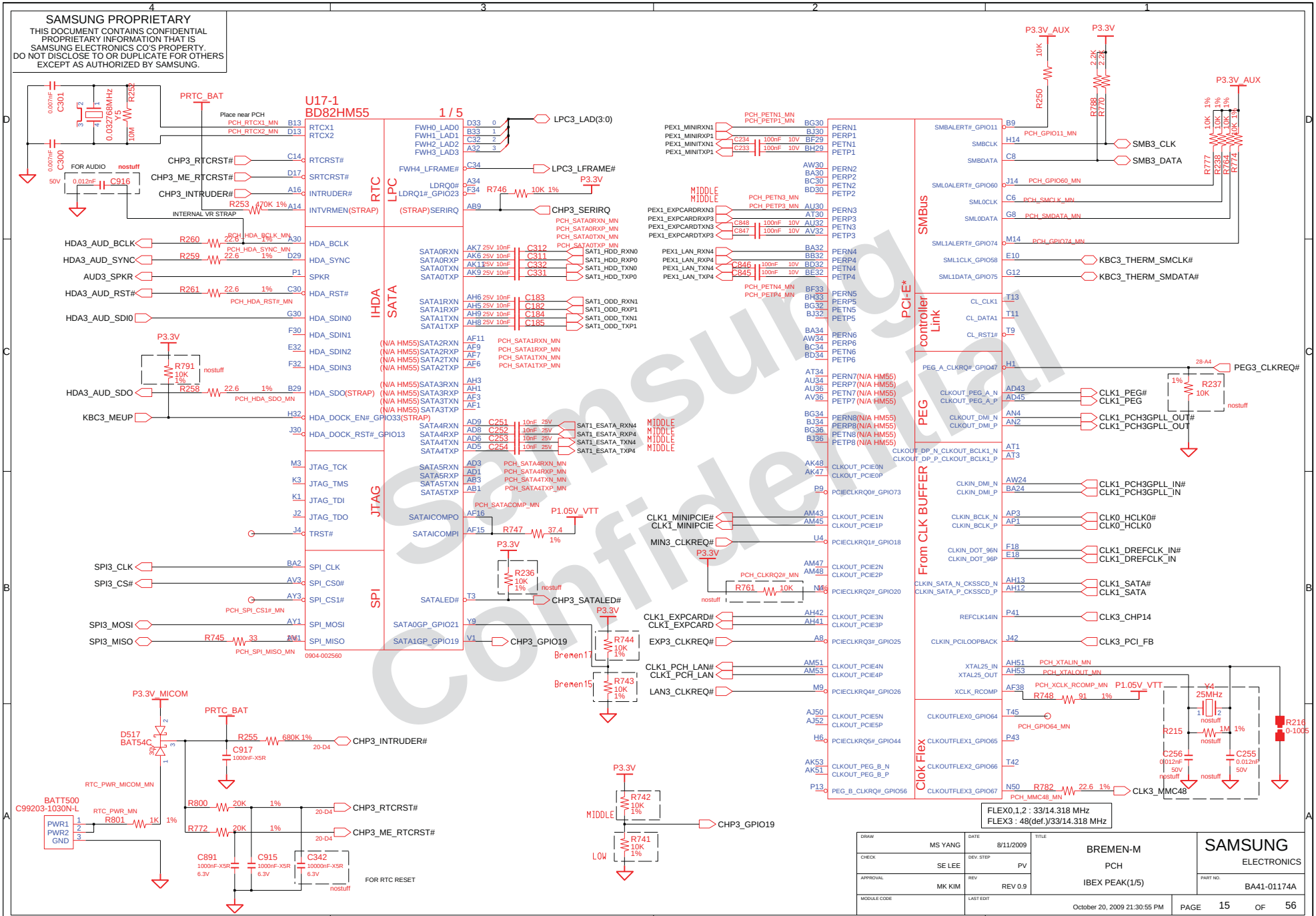

DRAW: MS YANG	DATE: 8/11/2009	TITLE: BREMEN-M PCH IBEX PEAK(1/5)	SAMSUNG ELECTRONICS
CHECK: SE LEE	DEV. STEP: PV		
APPROVAL: MK KIM	REV: REV 0.9		PART NO.: BA41-01174A
MODULE CODE:	LAST EDIT: October 20, 2009 21:30:55 PM	PAGE 15 OF 56	

SAMSUNG PROPRIETARY

THIS DOCUMENT CONTAINS CONFIDENTIAL PROPRIETARY INFORMATION THAT IS SAMSUNG ELECTRONICS CO'S PROPERTY. DO NOT DISCLOSE TO OR DUPLICATE FOR OTHERS EXCEPT AS AUTHORIZED BY SAMSUNG.

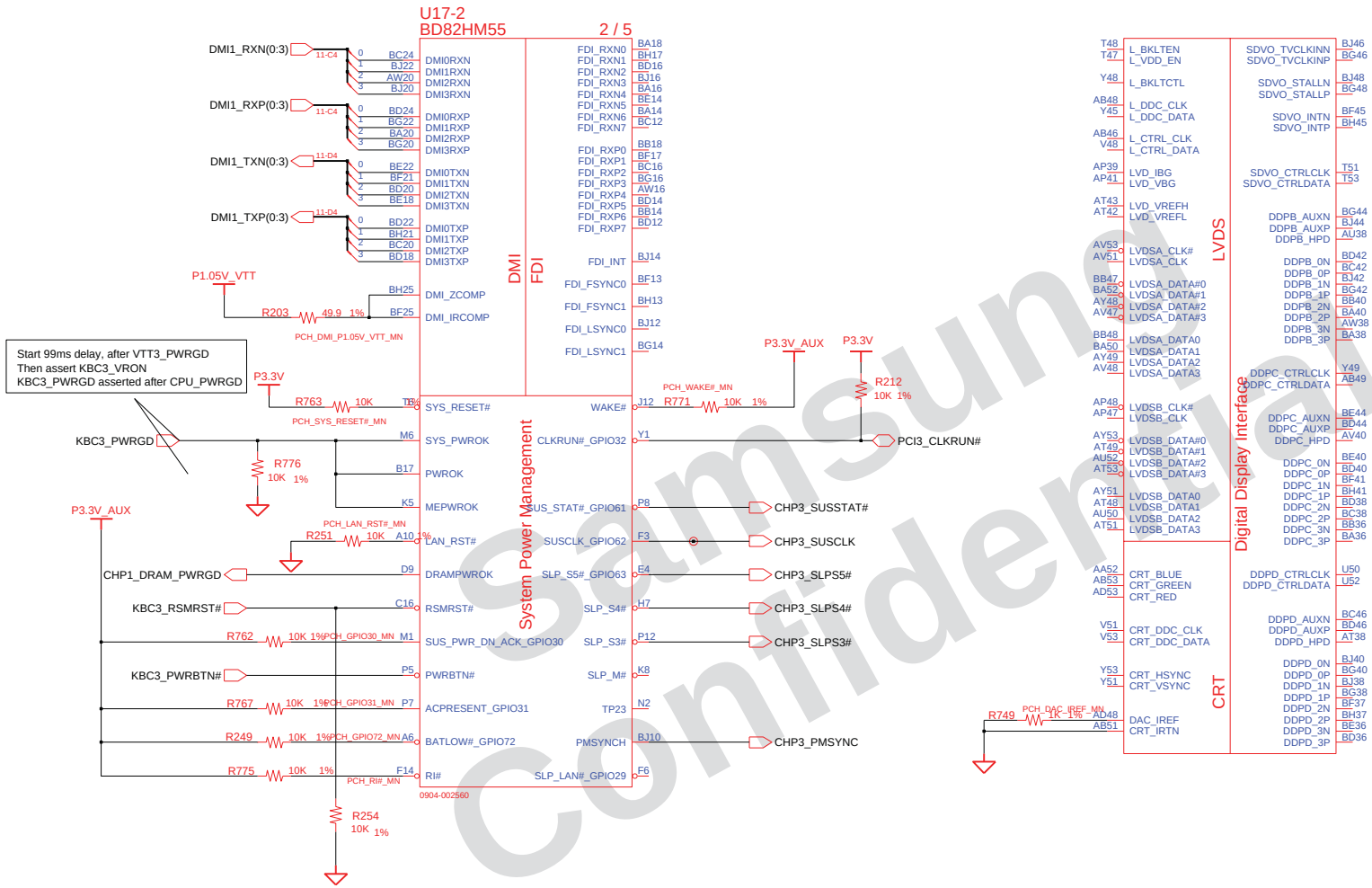

Samsung Confidential

DRAW: MS YANG	DATE: 8/11/2009	TITLE: BREMEN-M PCH IBEX PEAK(2/5)	SAMSUNG ELECTRONICS
CHECK: SE LEE	DEV. STEP: PV		
APPROVAL: MK KIM	REV: REV 0.9		PART NO.: BA41-01174A
MODULE CODE:	LAST EDIT: October 20, 2009 21:30:55 PM	PAGE 16 OF 56	

SAMSUNG PROPRIETARY

THIS DOCUMENT CONTAINS CONFIDENTIAL PROPRIETARY INFORMATION THAT IS SAMSUNG ELECTRONICS CO'S PROPERTY. DO NOT DISCLOSE TO OR DUPLICATE FOR OTHERS EXCEPT AS AUTHORIZED BY SAMSUNG.

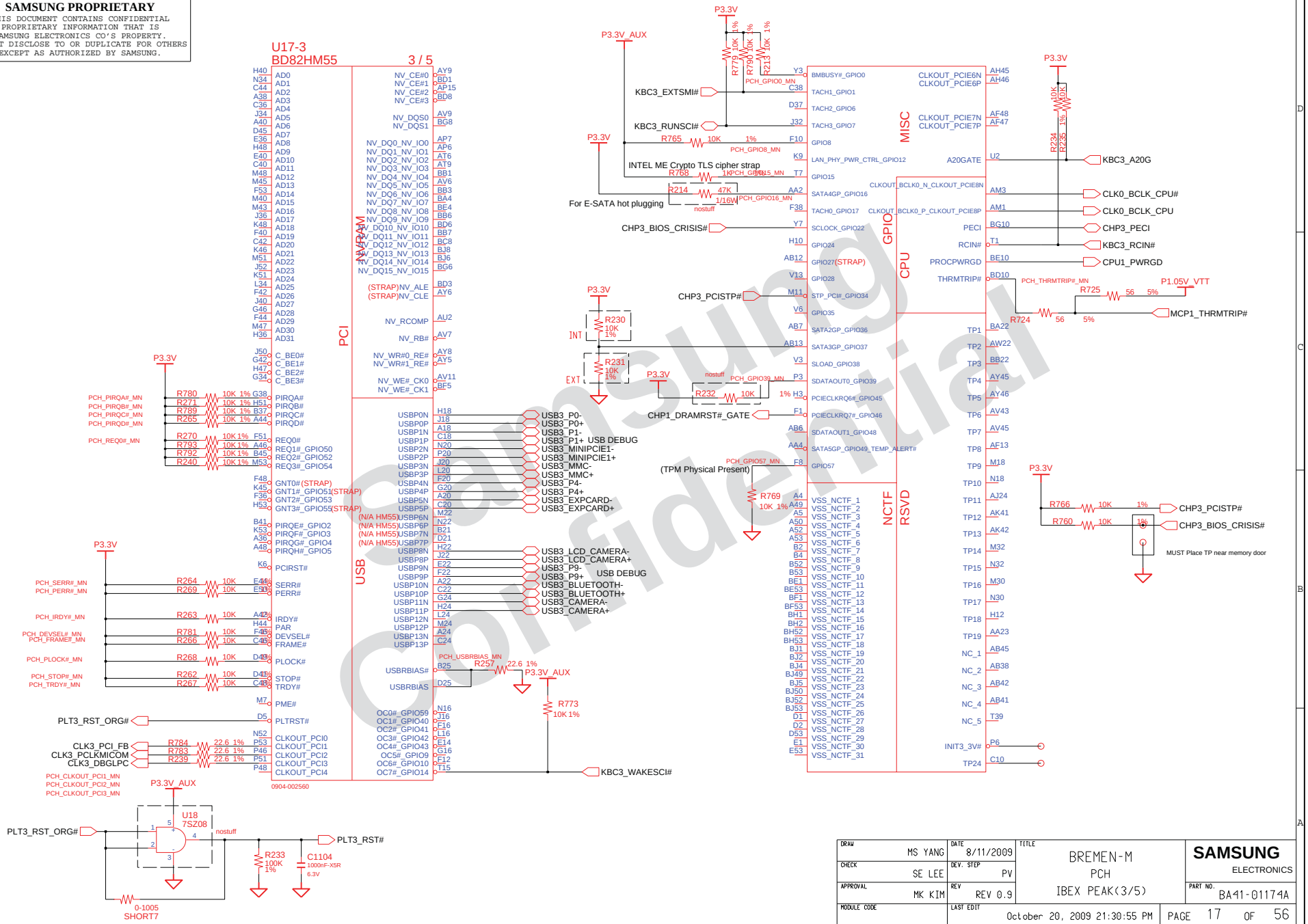

DRAW: MS YANG	DATE: 8/11/2009	TITLE: BREMEN-M PCH IBEX PEAK(3/5)	SAMSUNG ELECTRONICS
CHECK: SE LEE	DEV. STEP: PV		PART NO.: BA41-01174A
APPROVAL: MK KIM	REV: REV 0.9		
MODULE CODE	LAST EDIT: October 20, 2009 21:30:55 PM	PAGE 17 OF 56	

SAMSUNG PROPRIETARY

THIS DOCUMENT CONTAINS CONFIDENTIAL PROPRIETARY INFORMATION THAT IS SAMSUNG ELECTRONICS CO'S PROPERTY. DO NOT DISCLOSE TO OR DUPLICATE FOR OTHERS EXCEPT AS AUTHORIZED BY SAMSUNG.

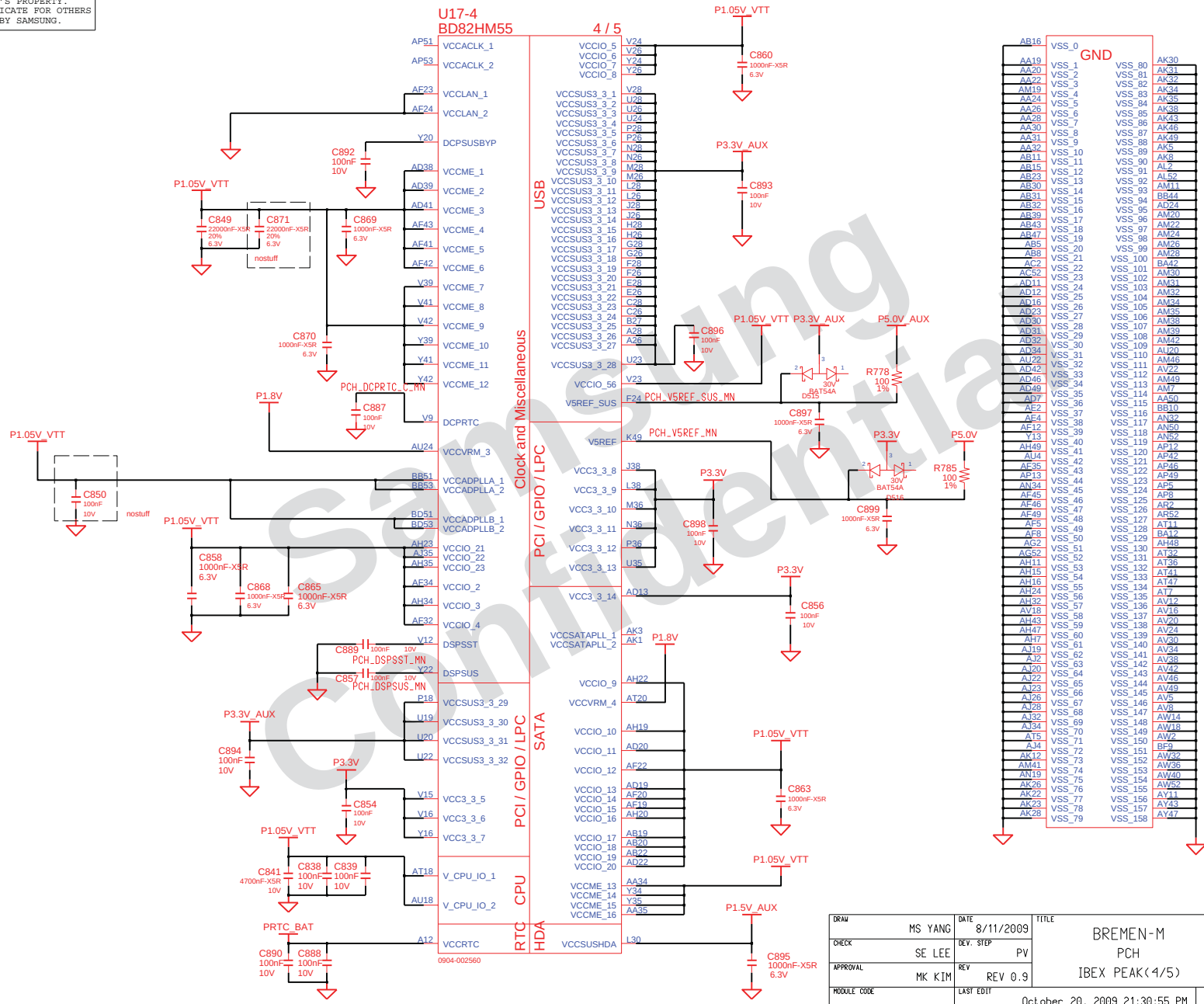

DRAW: MS YANG	DATE: 8/11/2009	TITLE: BREMEN-M PCH IBEX PEAK(4/5)	SAMSUNG ELECTRONICS
CHECK: SE LEE	DEV. STEP: PV		PART NO.: BA41-01174A
APPROVAL: MK KIM	REV: REV 0.9		
MODULE CODE:	LAST EDIT: October 20, 2009 21:30:55 PM	PAGE 18 OF 66	

Samsung Confidential

SAMSUNG PROPRIETARY

THIS DOCUMENT CONTAINS CONFIDENTIAL PROPRIETARY INFORMATION THAT IS SAMSUNG ELECTRONICS CO'S PROPERTY. DO NOT DISCLOSE TO OR DUPLICATE FOR OTHERS EXCEPT AS AUTHORIZED BY SAMSUNG.

This power share with thermal sensor

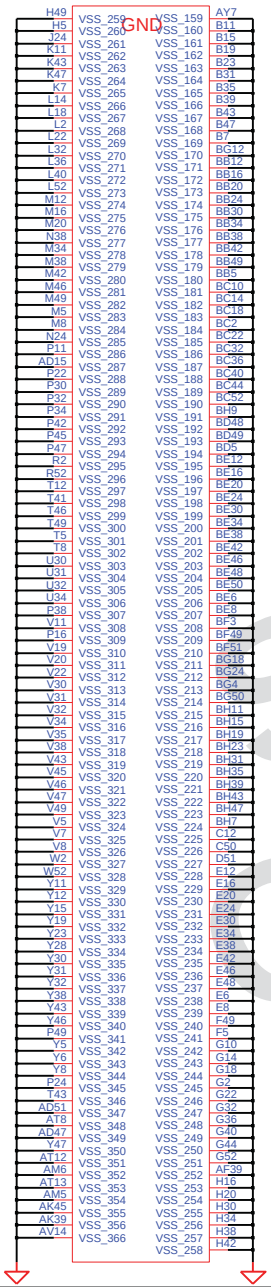

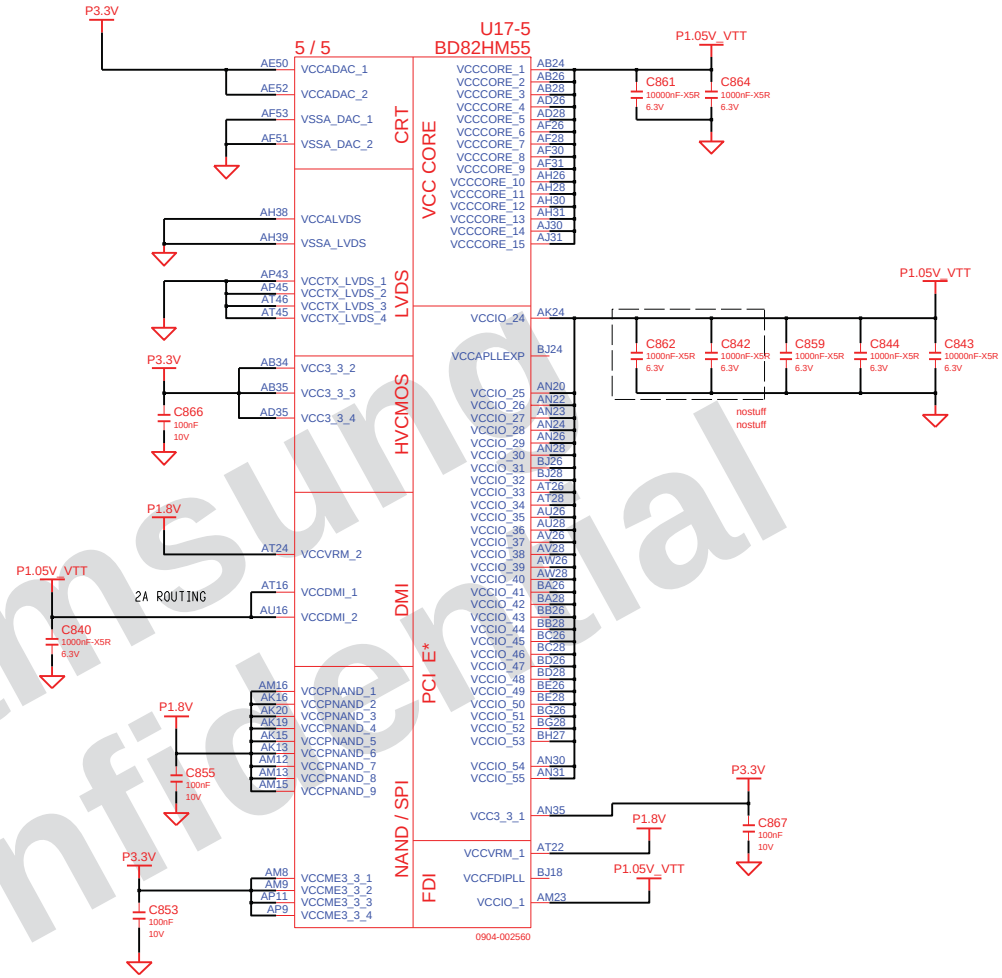

Samsung Confidential

DRAW: MS YANG	DATE: 8/11/2009	TITLE: BREMEN-M PCH IBEX PEAK(5/5)	SAMSUNG ELECTRONICS
CHECK: SE LEE	DEV. STEP: PV		
APPROVAL: MK KIM	REV: REV 0.9		PART NO.: BA41-01174A
MODULE CODE: undefined	LAST EDIT: October 20, 2009 21:30:55 PM	PAGE 19 OF 56	

D:/Users/mobile39/mentor/Bremen/PV/Bremen-M_MAIN

SAMSUNG PROPRIETARY

THIS DOCUMENT CONTAINS CONFIDENTIAL PROPRIETARY INFORMATION THAT IS SAMSUNG ELECTRONICS CO'S PROPERTY. DO NOT DISCLOSE TO OR DUPLICATE FOR OTHERS EXCEPT AS AUTHORIZED BY SAMSUNG.

U8-1
N11P-GE1-B-A3 1 / 5

Place near pin

PEX_IOVDD_1 AK16
PEX_IOVDD_2 AK17
PEX_IOVDD_3 AK21
PEX_IOVDD_4 AK24
PEX_IOVDD_5 AK27
PEX_IOVDDQ_1 AG11
PEX_IOVDDQ_2 AG12
PEX_IOVDDQ_3 AG13
PEX_IOVDDQ_4 AG15
PEX_IOVDDQ_5 AG16
PEX_IOVDDQ_6 AG17
PEX_IOVDDQ_7 AG18
PEX_IOVDDQ_8 AG22
PEX_IOVDDQ_9 AG23
PEX_IOVDDQ_10 AG24
PEX_IOVDDQ_11 AG25
PEX_IOVDDQ_12 AG26
PEX_IOVDDQ_13 AJ14
PEX_IOVDDQ_14 AJ15
PEX_IOVDDQ_15 AJ19
PEX_IOVDDQ_16 AJ21
PEX_IOVDDQ_17 AJ22
PEX_IOVDDQ_18 AJ24
PEX_IOVDDQ_19 AJ25
PEX_IOVDDQ_20 AJ27
PEX_IOVDDQ_21 AK18
PEX_IOVDDQ_22 AK20
PEX_IOVDDQ_23 AK23
PEX_IOVDDQ_24 AK26
PEX_IOVDDQ_25 AL16

C709 10V 100nF nostuff
C703 10V 100nF nostuff
C694 6.3V 1000nF-X5R
C706 6.3V 1000nF-X5R
C700 6.3V 1000nF-X5R
C666 10V 4700nF-X5R nostuff
C668 10V 100nF nostuff
C702 10V 100nF nostuff
C689 6.3V 1000nF-X5R
C653 6.3V 1000nF-X5R
C691 6.3V 1000nF-X5R
C667 10V 4700nF-X5R nostuff

P1.05V_VTT
GFX3_THERMDN B4 → THERMDN
GFX3_THERMDP B5 → THERMDP

P3.3V
R112 10K 1%
PLT3_RST# AM16 → PEX_RST_N
PEG3_CLKREQ# AR13 → PEX_CLKREQ_N

nostuff R639 200 1% AJ17 / AJ18 → PEX_TSTCLK_OUT / PEX_TSTCLK_OUT_N

CLK1_PEG AR16 → PEX_REFCLK
CLK1_PEG# AR17 → PEX_REFCLK_N

PEG1_RXP(15:0) → PEX_TX0 … PEX_TX15
PEG1_RXN(15:0) → PEX_TX0_N … PEX_TX15_N
PEG1_TXP(15:0) → PEX_RX0 … PEX_RX15
PEG1_TXN(15:0) → PEX_RX0_N … PEX_RX15_N

C564 C566 C568 C570 C572 C574 C576 C578 C580 C582 C584 C586 C588 C590 C592 C594 C565 C567 C569 C571 C573 C575 C577 C579 C581 C583 C585 C587 C589 C591 C593 C595 — 100nF 10V

AL17 AM18 AL19 AL20 AM21 AL22 AL23 AM24 AL25 AL26 AM27 AL28 AK29 AM29 AM31 AN32 AM17 AM19 AK19 AM20 AM22 AK22 AM23 AM25 AK25 AM26 AM28 AK28 AL29 AM30 AM32 AP32

AP17 AN19 AR19 AP20 AN22 AR22 AP23 AN25 AP25 AP26 AN28 AR28 AP29 AN31 AR31 AR34 AN17 AP19 AR20 AN20 AP22 AR23 AN23 AP25 AP26 AN26 AP28 AR29 AN29 AR31 AR32 AP34

PEX_SVDD_3V3_2 AG19
PEX_SVDD_3V3_1 F7
C698 10V 100nF
C699 10V 100nF
C740 6.3V 1000nF-X5R
B525 BLM18PG181SN1
P3.3V

NC_1 A2
NC_36 AA4
NC_37 AB4
NC_39 AB7
NC_40 AC5
NC_41 AD6
NC_44 AF6
NC_45 AG6
NC_49 AJ5
NC_50 AK15
NC_51 AL7
NC_11 E7
NC_22 H32
NC_28 M7
NC_30 P6
NC_33 U7
NC_34 V6
NC_35 Y4

VDD33_1 J9
VDD33_2 J10
VDD33_3 J11
VDD33_4 J12
VDD33_5 J13

VDD_SENSE_1 D35
VDD_SENSE_2 P7
VDD_SENSE_3 AD20
GND_SENSE_1 E35
GND_SENSE_2 R7
GND_SENSE_3 AD19
GFX1_VDDSENSE
R1102 0 nostuff

PEX_PLLVDD AG14
GFX1_PEX_PLLVDD_MN
B516 BLM18PG181SN1
P1.05V_VTT
C688 10V 100nF
C672 6.3V 1000nF-X5R
C670 6.3V 1000nF-X5R

NC_46 AG20
PEX_TERMP AG21
R640 2.49K 1%
GFX3_PEX_TERMP_MN
TESTMODE AP35
R595 10K 1% nostuff
R594 10K 1%
GFX3_TESTMODE_MN
P3.3V

P1.05V_VTT
B519 BLM18PG181SN1
C674 6.3V 1000nF-X5R
C676 10V 100nF
C678 6.3V 1000nF-X5R
C681 10V 100nF
GFX3_MULTI_STRAP_REF0_MN
GFX3_MULTI_STRAP_REF1_MN
R661 40.2K 1% N9
R660 40.2K 1% M9
MULTI_STRAP_REF0_GND
MULTI_STRAP_REF1_GND

P1.05V_VTT
B518 BLM18PG181SN1
C679 6.3V 1000nF-X5R
C675 6.3V 1000nF-X5R
GFX1_PLLVDD_MN AE9
PLLVDD
VID_PLLVDD AD9
SP_PLLVDD AF9
GFX1_SP_PLLVDD_MN

CLK3_27M_SS D2 → XTAL_SSIN
CLK3_27M B1 → XTAL_IN
R161 10K 1%
R160 10K 1% nostuff

P3.3V
R636 10K 1%
GFX3_CEC_MN
CEC AB5

JTAG_TCK AP14
JTAG_TMS AR14
JTAG_TDI AN14
JTAG_TDO AN16
JTAG_TRST_N AP16
GFX3_JTAG_TRST_N_MN
R82 10K 1%

NC_26 J26
NC_25 J25
NC_HDA_BCLK D7
NC_HDA_RST D6
NC_HDA_SDI C7
NC_HDA_SDO B7
NC_HDA_SYNC A7

P3.3V
R146 2.2K
R148 2.2K
GFX3_I2CS_SCL_MN
GFX3_I2CS_SDA_MN

I2CS_SCL E2
I2CS_SDA E1
I2CC_SCL E3
I2CC_SDA E4
NC_52 F4
NC_53 G5
NC_54 D5
NC_55 E5
R648 33 1%
R649 33 1%
LCD3_EDID_CLK
LCD3_EDID_DATA
GFX3_EDID_CLK_MN
GFX3_EDID_DATA_MN

PEG3_LCDVDDON & PEG3_BKLTEN
PDs are locate in connector
R650 10K 1%

GPIO2 K3
GPIO3 H3
GPIO4 H2
GPIO5 H1
GPIO6 H4
GPIO7 H5
GPIO8 H6
GPIO9 J7
GPIO10 K4
GPIO11 K5
GPIO12 H7
GPIO13 J4
GPIO14 J6
GPIO16 L2
GPIO17 L4
GPIO18 M4
GPIO20 L5
GPIO22 L6
GPIO23 M6

LCD3_BRIT
PEG3_LCDVDDON
PEG3_BKLTEN
GFX3_VOLTID0
GFX3_VOLTID1
GFX3_OVERTEMP_MN
VOLTID0, 1 PU & PD ARE LOCATE IN POWER

ROM_CS_N C3
ROM_SI D3
ROM_SO C4
ROM_SCLK D4
GFX3_ROM_SI
GFX3_ROM_SO
GFX3_ROM_SCLK

P3.3V
nostuff
HDCP PU
I2CH_SCL F6
I2CH_SDA G6
R655 2.2K
R659 2.2K
GFX3_HDCP_SCL_MN
GFX3_HDCP_SDA_MN

SPDIF A5
BUFRST_N A4
NC_5 C5
R159 4.7K 1%
nostuff
GFX3_BUFRST_N_MN
R685 0 nostuff

GND_169 AK14
GND_29 K9

XTAL_OUTBUFF D1
XTAL_OUT B2
R144 10K 1%
R162 10K 1%
GFX3_XTAL_OUTBUFF_MN
GFX3_XTAL_OUT_MN

Samsung Confidential

DESIGN: MS YANG	DATE: 8/11/2009	TITLE: BREMEN-M N11X_40NM(1/5) N11X_40NM(1/5)	SAMSUNG ELECTRONICS
CHECK: SE LEE	DEV. STEP: PV		
APPROVAL: MK KIM	REV: REV 0.9		PART NO.: BA41-01174A
MODULE CODE:	LAST EDIT: October 20, 2009 21:30:55 PM	PAGE 20 OF 56	

SAMSUNG PROPRIETARY

THIS DOCUMENT CONTAINS CONFIDENTIAL PROPRIETARY INFORMATION THAT IS SAMSUNG ELECTRONICS CO'S PROPERTY. DO NOT DISCLOSE TO OR DUPLICATE FOR OTHERS EXCEPT AS AUTHORIZED BY SAMSUNG.

U8-2
N11P-GE1-B-A3 2 / 5

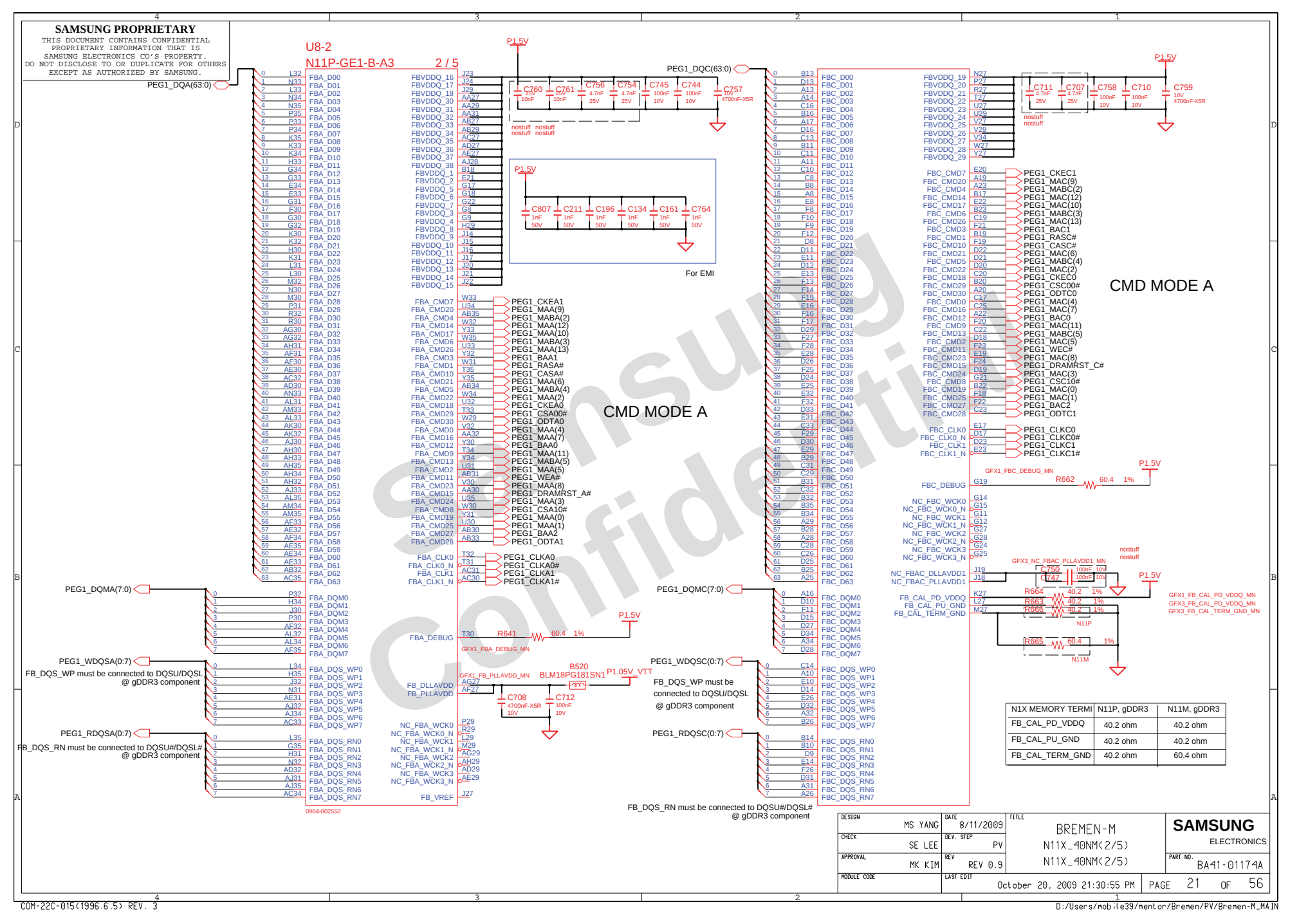

N1X MEMORY TERMI	N11P, gDDR3	N11M, gDDR3
FB_CAL_PD_VDDQ	40.2 ohm	40.2 ohm
FB_CAL_PU_GND	40.2 ohm	40.2 ohm
FB_CAL_TERM_GND	40.2 ohm	60.4 ohm

DESIGN: MS YANG	DATE: 8/11/2009	TITLE: BREMEN-M N11X_40NM(2/5) N11X_40NM(2/5)	SAMSUNG ELECTRONICS
CHECK: SE LEE	DEV. STEP: PV		
APPROVAL: MK KIM	REV: REV 0.9		PART NO.: BA41-01174A
MODULE CODE:	LAST EDIT: October 20, 2009 21:30:55 PM	PAGE 21 OF 56	

SAMSUNG PROPRIETARY

THIS DOCUMENT CONTAINS CONFIDENTIAL PROPRIETARY INFORMATION THAT IS SAMSUNG ELECTRONICS CO'S PROPERTY. DO NOT DISCLOSE TO OR DUPLICATE FOR OTHERS EXCEPT AS AUTHORIZED BY SAMSUNG.

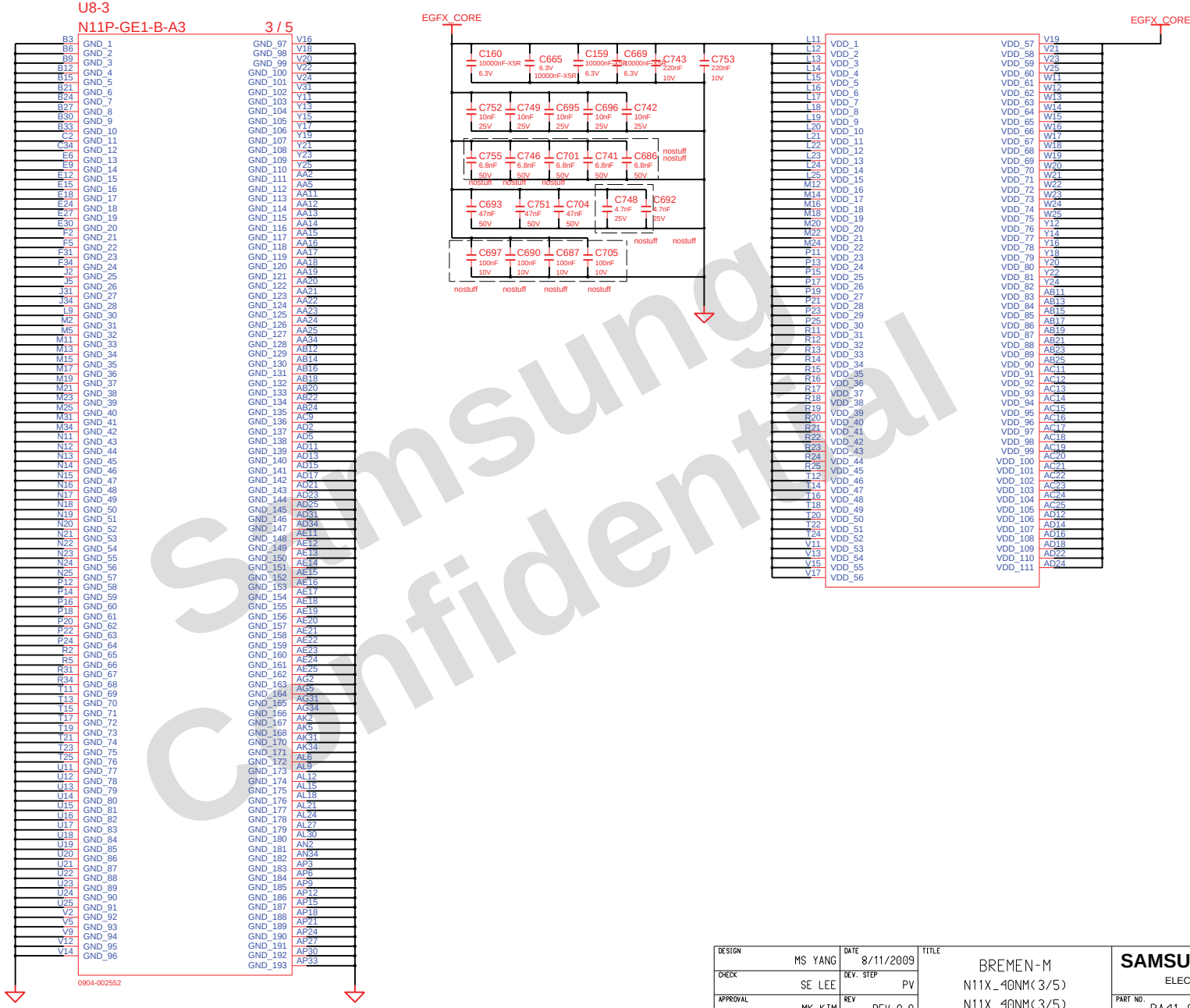

Samsung Confidential

DESIGN: MS YANG	DATE: 8/11/2009	TITLE: BREMEN-M N11X_40NM(3/5) N11X_40NM(3/5)	SAMSUNG ELECTRONICS
CHECK: SE LEE	DEV. STEP: PV		
APPROVAL: MK KIM	REV: REV 0.9		PART NO.: BA41-01174A
MODULE CODE:	LAST EDIT: October 20, 2009 21:30:55 PM	PAGE 22 OF 56	

SAMSUNG PROPRIETARY

THIS DOCUMENT CONTAINS CONFIDENTIAL PROPRIETARY INFORMATION THAT IS SAMSUNG ELECTRONICS CO'S PROPERTY. DO NOT DISCLOSE TO OR DUPLICATE FOR OTHERS EXCEPT AS AUTHORIZED BY SAMSUNG.

U8-4
N11P-GE1-B-A3 4 / 5

P1.05V_VTT
B514 BLM18PG181SN1
GFX1_IFPAB_PLLVDD_MN
C644 6.3V 1000nF-X5R nostuff
C646 10V 4700nF-X5R
C648 6.3V 1000nF-X5R
C647 50V 0.47nF nostuff
R638 1K 1% nostuff
GFX3_IFPAB_RSET_MN
GFX1_IFPA_IOVDD_MN
C634 10V 4700nF-X5R
C642 10V 10nF
C638 6.3V 1000nF-X5R
C682 10V 100nF
P1.8V
B512 BLM18PG181SN1
C635 10V 4700nF-X5R nostuff
C641 10V 100nF nostuff
C639 6.3V 1000nF-X5R nostuff
C680 10V 100nF nostuff

IFPA_PLLVDD AK9
IFPAB_RSET AJ11
IFPA_IOVDD AG9
IFPB_IOVDD AG10
IFPC_PLLVDD AJ9
IFPC_RSET AK7
IFPC_IOVDD AJ8
IFPD_PLLVDD AC6
IFPD_RSET AB6
IFPD_IOVDD AK8
IFPEF_PLLVDD AJ6
IFPEF_RSET AL1
IFPE_IOVDD AE7
IFPF_IOVDD AD7

IFPC disabled
IFPD disabled

GFX1_IFPC_PLLVDD_MN
R587 10K 1%
GFX1_IFPD_IOVDD_MN
R588 10K 1%
P3.3V
BLM18PG181SN1 B513
GFX3_IFPEF_PLLVDD_MN
C636 10V 4700nF-X5R
C637 6.3V 1000nF-X5R
C645 10V 100nF
C643 10V 100nF
C640 10V 100nF
R132 1K 1%
GFX3_IFPEF_RSET_MN
P1.05V_VTT
BLM18PG181SN1 B517
C673 10V 4700nF-X5R
C671 10V 100nF
C677 10V 100nF
GFX1_IFPE_IOVDD_MN

IFPA_TXD0_N AL8 → LCD1_ADATA0#
IFPA_TXD0 AM8 → LCD1_ADATA0
IFPA_TXD1_N AM9 → LCD1_ADATA1#
IFPA_TXD1 AM10 → LCD1_ADATA1
IFPA_TXD2_N AL10 → LCD1_ADATA2#
IFPA_TXD2 AK10 → LCD1_ADATA2
IFPA_TXD3_N AL11 → R591 100 1% nostuff → GFX3_IFPA_TXD3_N_MN
IFPA_TXD3 AK11 → GFX3_IFPA_TXD3_MN
IFPA_TXC_N AM12 → LCD1_ACLK#
IFPA_TXC AM11 → LCD1_ACLK
IFPB_TXD4_N AP8 → LCD1_BDATA0#
IFPB_TXD4 AN8 → LCD1_BDATA0
IFPB_TXD5_N AN10 → LCD1_BDATA1#
IFPB_TXD5 AP10 → LCD1_BDATA1
IFPB_TXD6_N AR10 → LCD1_BDATA2#
IFPB_TXD6 AR11 → LCD1_BDATA2
IFPB_TXD7_N AP11 → R111 nostuff 100 1% → GFX3_IFPB_TXD7_N_MN
IFPB_TXD7 AN11 → GFX3_IFPB_TXD7_MN
IFPB_TXC_N AN13 → LCD1_BCLK#
IFPB_TXC AP13 → LCD1_BCLK
GPIO0 K1

P3.3V
IFPC_AUX_SDA_N AN3 → R107 2.2K → GFX3_IFPC_AUX_SDA_N_MN
IFPC_AUX_SCL AP2 → R108 2.2K → GFX3_IPFC_AUX_SCL_MN
IFPC_L3_N AR2
IFPC_L3 AP1
IFPC_L2_N AM4
IFPC_L2 AM3
IFPC_L1_N AM5
IFPC_L1 AL5
IFPC_L0_N AM6
IFPC_L0 AM7
GPIO1 K2

P3.3V
IFPD_AUX_SDA_N AN4 → R109 2.2K → GFX3_IPFD_AUX_SDA_N_MN
IFPD_AUX_SCL AP4 → R110 2.2K → GFX3_IFPD_AUX_SCL_MN
IFPD_L3_N AR4
IFPD_L3 AR5
IFPD_L2_N AP5
IFPD_L2 AN5
IFPD_L1_N AN7
IFPD_L1 AP7
IFPD_L0_N AR7
IFPD_L0 AR8
GPIO19 L7

IFPE_AUX_SDA_N AD4 → PEG3_HDMI_DATA
IFPE_AUX_SCL AE4 → PEG3_HDMI_CLK
HDMI_TXCN_IFPE_L3_N AE5 → C105 100nF 10V → PEG3_TXCN_HDMI
HDMI_TXCP_IFPE_L3 AE6 → C104 100nF 10V → PEG3_TXCP_HDMI
HDMI_TX0N_IFPE_L2_N AF5 → C103 100nF 10V → PEG3_TX0N_HDMI
HDMI_TX0P_IFPE_L2 AF4 → C102 100nF 10V → PEG3_TX0P_HDMI
HDMI_TX1N_IFPE_L1_N AG4 → C125 100nF 10V → PEG3_TX1N_HDMI
HDMI_TX1P_IFPE_L1 AH4 → C128 100nF 10V → PEG3_TX1P_HDMI
HDMI_TX2N_IFPE_L0_N AH5 → C126 100nF 10V → PEG3_TX2N_HDMI
HDMI_TX2P_IFPE_L0 AH6 → C127 100nF 10V → PEG3_TX2P_HDMI
GPIO15 L1 → PEG3_HPD_HDMI

PEG3_TXCN_HDMI_MN
PEG3_TXCP_HDMI_MN
PEG3_TX0N_HDMI_MN
PEG3_TX0P_HDMI_MN
PEG3_TX1N_HDMI_MN
PEG3_TX1P_HDMI_MN
PEG3_TX2N_HDMI_MN
PEG3_TX2P_HDMI_MN

IFPF_AUX_SDA_N AF2
IFPF_AUX_SCL AF3
IFPF_L3_N AH3
IFPF_L3 AH2
IFPF_L2_N AH1
IFPF_L2 AJ1
IFPF_L1_N AJ2
IFPF_L1 AJ3
IFPF_L0_N AL3
IFPF_L0 AL2
GPIO21 K6

0904-002552

PEG3_TX2P_HDMI R122 499 1%
PEG3_TX2N_HDMI R123 499 1%
PEG3_TX1P_HDMI R128 499 1%
PEG3_TX1N_HDMI R127 499 1%
PEG3_TX0P_HDMI R125 499 1%
PEG3_TX0N_HDMI R124 499 1%
PEG3_TXCP_HDMI R126 499 1%
PEG3_TXCN_HDMI R105 499 1%
PEG3_TX_HDMI_PD_Q_MN
P3.3V
Q511 RHU002N06

DESIGN: MS YANG	DATE: 8/11/2009	TITLE: BREMEN-M N11X_40NM(4/5) N11X_40NM(4/5)	SAMSUNG ELECTRONICS
CHECK: SE LEE	DEV. STEP: PV		
APPROVAL: MK KIM	REV: REV 0.9		PART NO.: BA41-01174A
MODULE CODE:	LAST EDIT: October 20, 2009 21:30:55 PM	PAGE 23 OF 56	

Samsung Confidential

SAMSUNG PROPRIETARY

THIS DOCUMENT CONTAINS CONFIDENTIAL PROPRIETARY INFORMATION THAT IS SAMSUNG ELECTRONICS CO'S PROPERTY. DO NOT DISCLOSE TO OR DUPLICATE FOR OTHERS EXCEPT AS AUTHORIZED BY SAMSUNG.

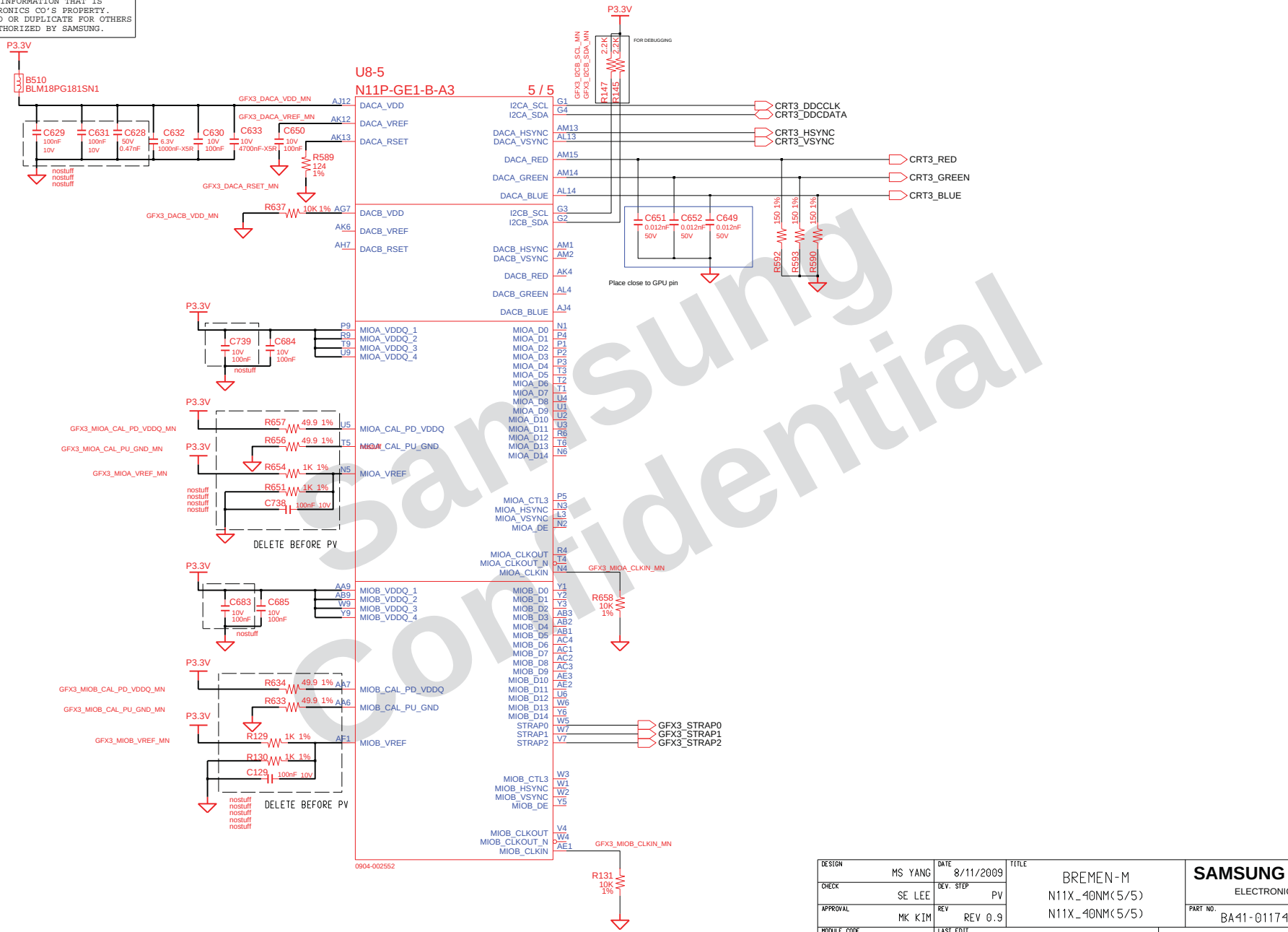

Samsung Confidential

DESIGN: MS YANG	DATE: 8/11/2009	TITLE: BREMEN-M N11X_40NM(5/5) N11X_40NM(5/5)	SAMSUNG ELECTRONICS
CHECK: SE LEE	DEV. STEP: PV		
APPROVAL: MK KIM	REV: REV 0.9		PART NO.: BA41-01174A
MODULE CODE	LAST EDIT: October 20, 2009 21:30:55 PM	PAGE 24 OF 56	

SAMSUNG PROPRIETARY

THIS DOCUMENT CONTAINS CONFIDENTIAL PROPRIETARY INFORMATION THAT IS SAMSUNG ELECTRONICS CO'S PROPERTY. DO NOT DISCLOSE TO OR DUPLICATE FOR OTHERS EXCEPT AS AUTHORIZED BY SAMSUNG.

A-Channel #0

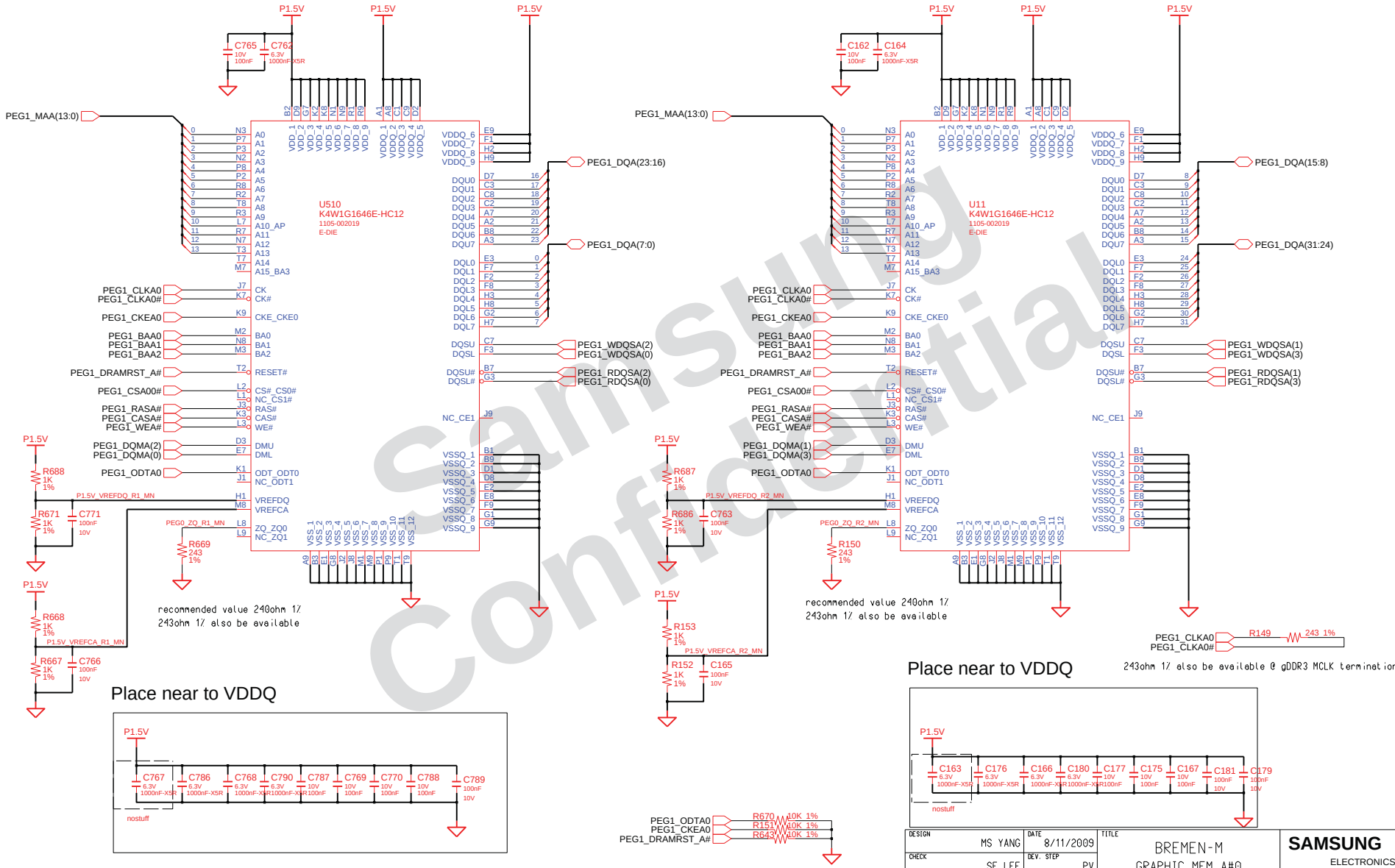

samsung Confidential

DESIGN: MS YANG	DATE: 8/11/2009	TITLE: BREMEN-M GRAPHIC_MEM A#0 GRAPHIC_MEM A#0	SAMSUNG ELECTRONICS
CHECK: SE LEE	DEV. STEP: PV		
APPROVAL: MK KIM	REV: REV 0.9		PART NO.: BA41-01174A
MODULE CODE:	LAST EDIT: October 20, 2009 21:30:55 PM	PAGE 25 OF 56	

SAMSUNG PROPRIETARY

THIS DOCUMENT CONTAINS CONFIDENTIAL PROPRIETARY INFORMATION THAT IS SAMSUNG ELECTRONICS CO'S PROPERTY. DO NOT DISCLOSE TO OR DUPLICATE FOR OTHERS EXCEPT AS AUTHORIZED BY SAMSUNG.

A-Channel #1

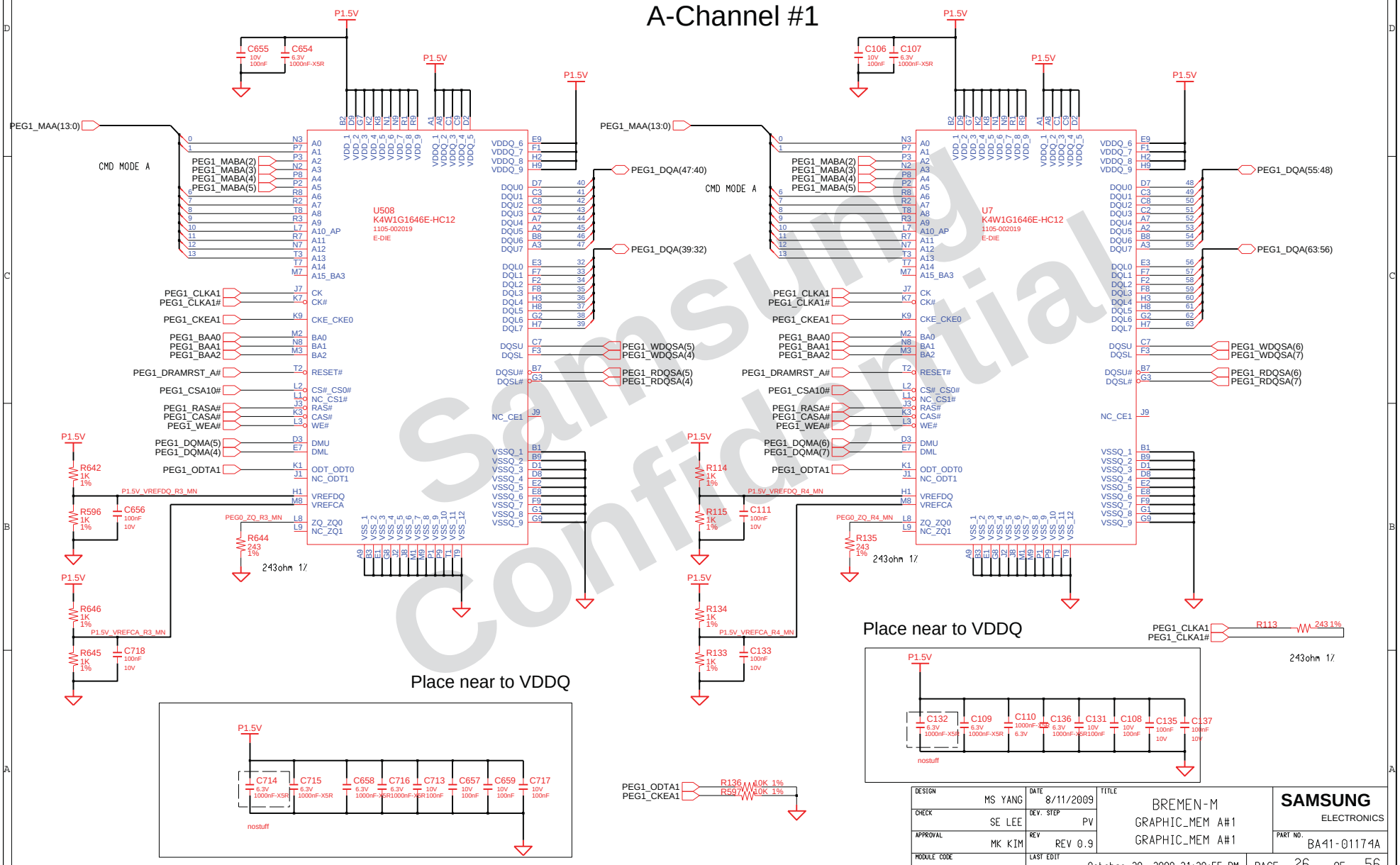

Samsung Confidential

DESIGN: MS YANG	DATE: 8/11/2009	TITLE: BREMEN-M GRAPHIC_MEM A#1 GRAPHIC_MEM A#1	SAMSUNG ELECTRONICS
CHECK: SE LEE	DEV. STEP: PV		
APPROVAL: MK KIM	REV: REV 0.9		PART NO.: BA41-01174A
MODULE CODE	LAST EDIT: October 20, 2009 21:30:55 PM	PAGE 26 OF 56	

SAMSUNG PROPRIETARY

THIS DOCUMENT CONTAINS CONFIDENTIAL PROPRIETARY INFORMATION THAT IS SAMSUNG ELECTRONICS CO'S PROPERTY. DO NOT DISCLOSE TO OR DUPLICATE FOR OTHERS EXCEPT AS AUTHORIZED BY SAMSUNG.

C-Channel #0

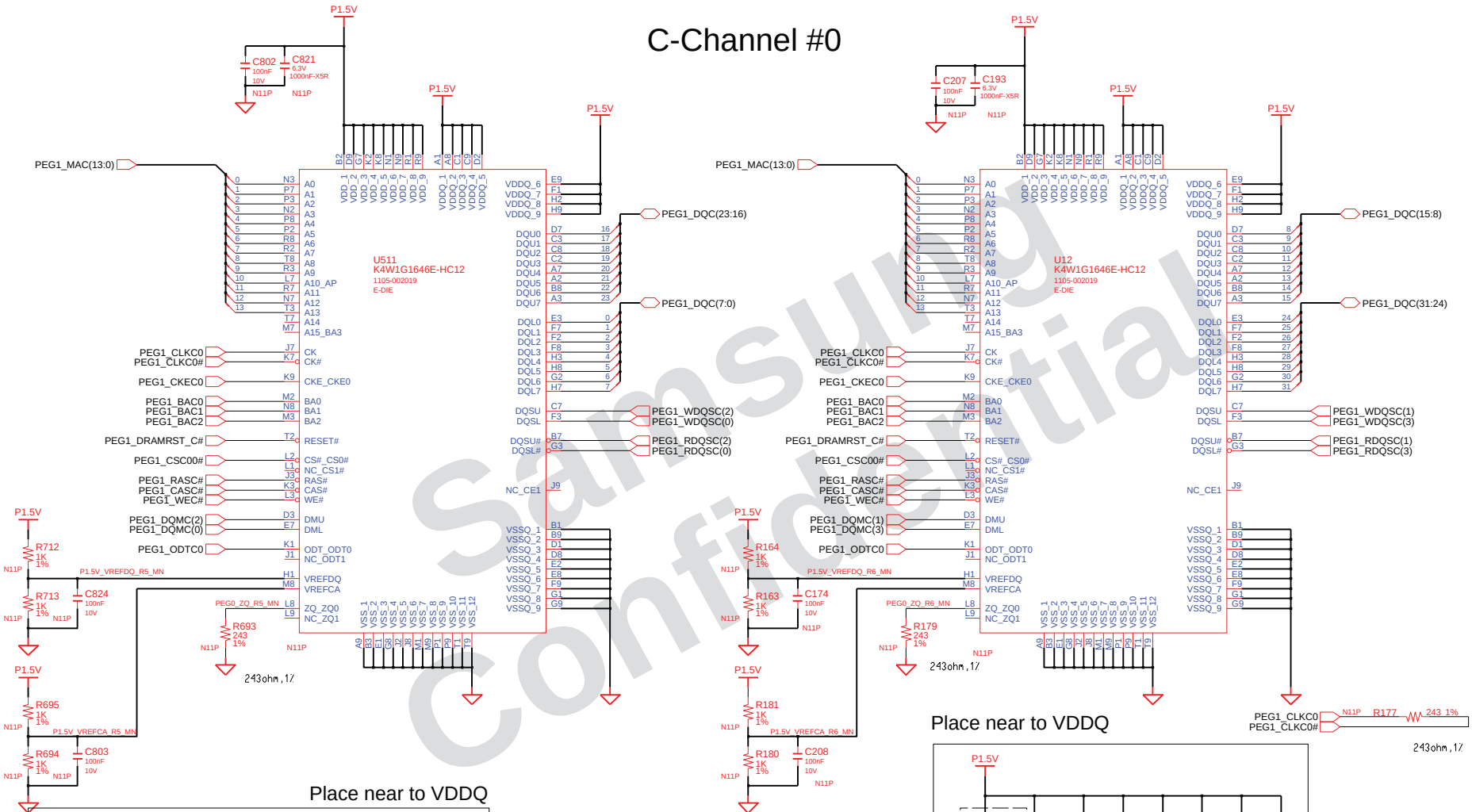

Samsung Confidential

DESIGN: MS YANG	DATE: 8/11/2009	TITLE: BREMEN-M GRAPHIC_MEM C#0 GRAPHIC_MEM C#0	SAMSUNG ELECTRONICS
CHECK: SE LEE	DEV. STEP: PV		PART NO.: BA41-01174A
APPROVAL: MK KIM	REV: REV 0.9		
MODULE CODE	LAST EDIT: October 20, 2009 21:30:55 PM	PAGE 27 OF 56	

SAMSUNG PROPRIETARY
THIS DOCUMENT CONTAINS CONFIDENTIAL PROPRIETARY INFORMATION THAT IS SAMSUNG ELECTRONICS CO'S PROPERTY. DO NOT DISCLOSE TO OR DUPLICATE FOR OTHERS EXCEPT AS AUTHORIZED BY SAMSUNG.

C-Channel #1

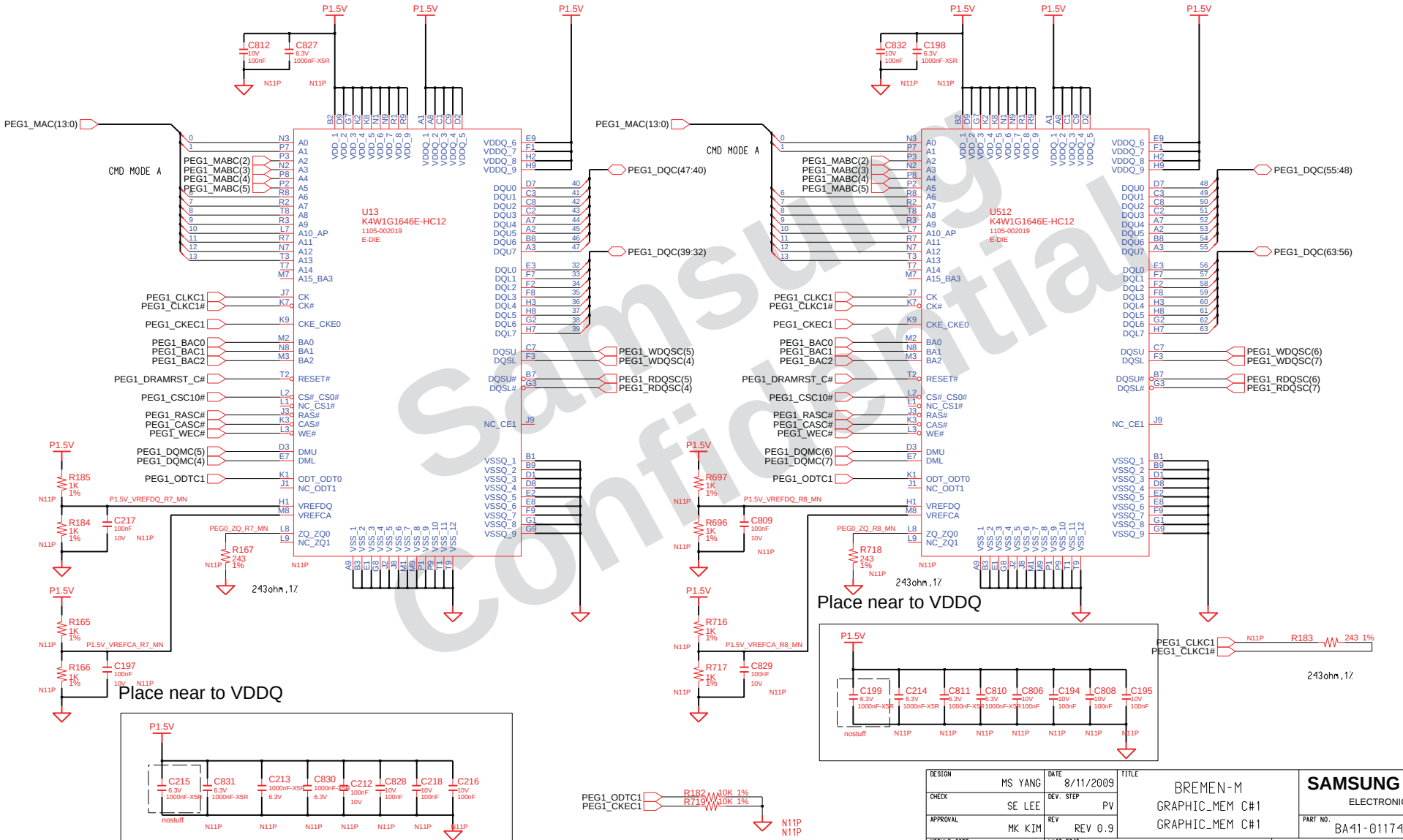

Samsung Confidential

DESIGN: MS YANG	DATE: 8/11/2009	TITLE: BREMEN-M GRAPHIC_MEM C#1 GRAPHIC_MEM C#1	SAMSUNG ELECTRONICS
CHECK: SE LEE	DEV. STEP: PV		
APPROVAL: MK KIM	REV: REV 0.9		PART NO.: BA41-01174A
MODULE CODE:	LAST EDIT: October 20, 2009 21:30:55 PM	PAGE 28 OF 56	

SAMSUNG PROPRIETARY
THIS DOCUMENT CONTAINS CONFIDENTIAL PROPRIETARY INFORMATION THAT IS SAMSUNG ELECTRONICS CO'S PROPERTY. DO NOT DISCLOSE TO OR DUPLICATE FOR OTHERS EXCEPT AS AUTHORIZED BY SAMSUNG.

N11x_40nm STRAP

STRAP PIN	BIT 3	BIT 2	BIT 1	BIT0
ROM_SO	XCLK_417	FB_0_BAR_SIZE	SMB_ALT_ADDR	VGA_DEVICE
ROM_SCLK	PCI_DEVID[4]	SUB_VENDOR	SLOT_CLK_CFG	PEX_PLL_EN_TERM
ROM_SI	RAMCFG[3]	RAMCFG[2]	RAMCFG[1]	RAMCFG[0]
STRAP2	PCI_DEVID[3]	PCI_DEVID[2]	PCI_DEVID[1]	PCI_DEVID[0]
STRAP1	3GIO_PADCFG[3]	3GIO_PADCFG[2]	3GIO_PADCFG[1]	3GIO_PADCFG[0]
STRAP0	USER[3]	USER[2]	USER[1]	USER[0]

RESISTOR	PULL UP	PULL DOWN
5K	1000	0000
10K	1001	0001
15K	1010	0010
20K	1011	0011
25K	1100	0100
30K	1101	0101
35K	1110	0110
45K	1111	0111

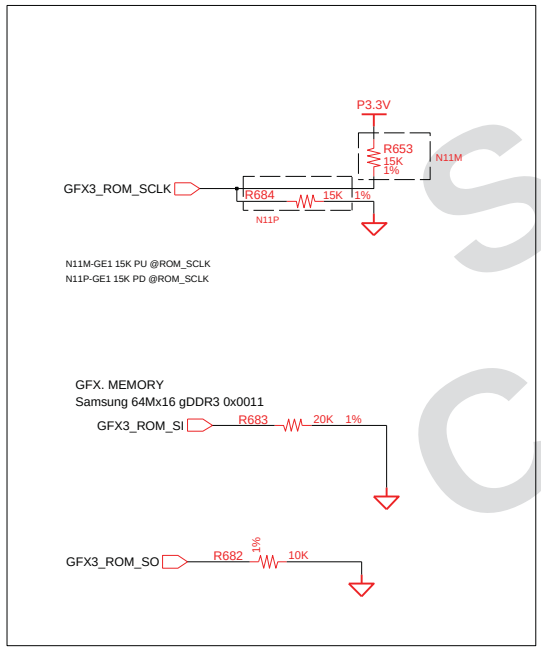

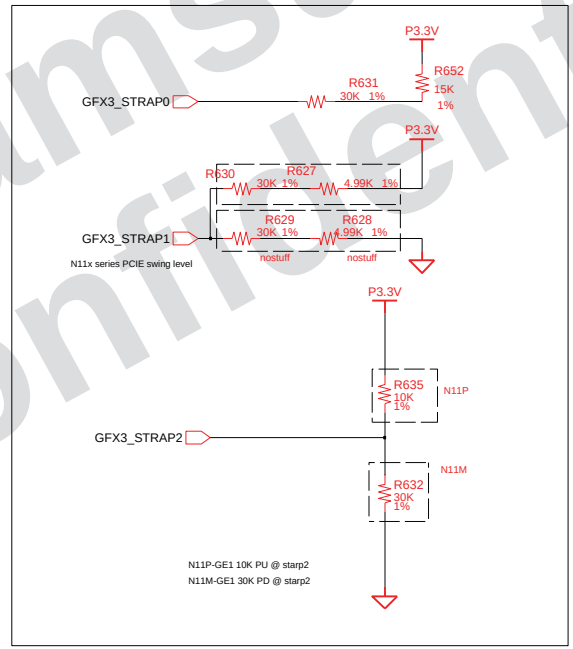

Samsung Confidential

DESIGN: MS YANG	DATE: 8/11/2009	TITLE: BREMEN-M N11X_40NM STRAP N11X_40NM STRAP	SAMSUNG ELECTRONICS
CHECK: SE LEE	DEV. STEP: PV		
APPROVAL: MK KIM	REV: REV 0.9		PART NO.: BA41-01174A
MODULE CODE:	LAST EDIT: October 20, 2009 21:30:55 PM	PAGE 29 OF 56	

SAMSUNG PROPRIETARY
THIS DOCUMENT CONTAINS CONFIDENTIAL PROPRIETARY INFORMATION THAT IS SAMSUNG ELECTRONICS CO'S PROPERTY. DO NOT DISCLOSE TO OR DUPLICATE FOR OTHERS EXCEPT AS AUTHORIZED BY SAMSUNG.

LVDS

Backlight On

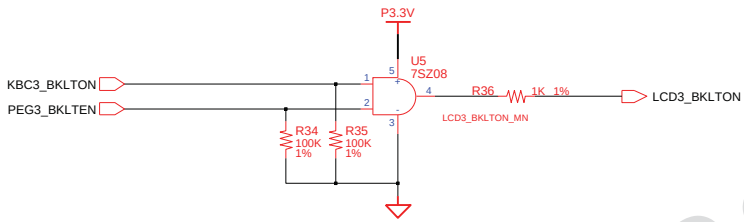

LCD Power

EBL Purpose

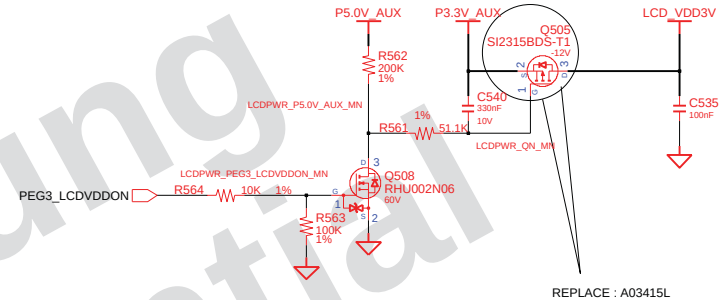

LED Power

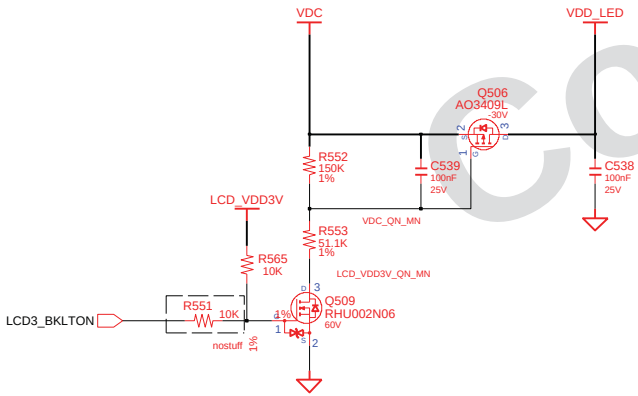

Camera + LCD Connector

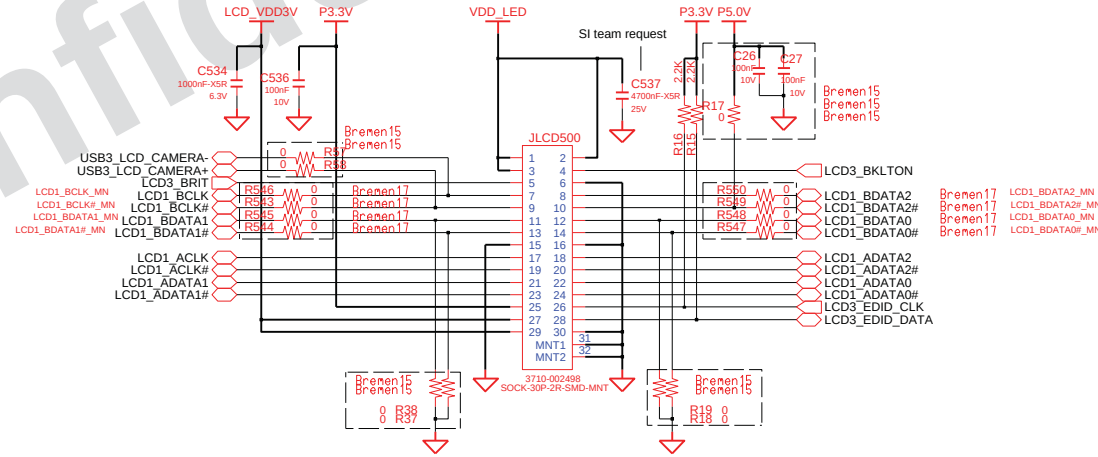

Samsung Confidential

DESIGN: MS YANG	DATE: 8/11/2009	TITLE: BREMEN-M GRAPHICS_IF LVDS	SAMSUNG ELECTRONICS
CHECK: SE LEE	DEV. STEP: PV		
APPROVAL: MK KIM	REV: REV 0.9		PART NO.: BA41-01174A
MODULE CODE:	LAST EDIT: October 20, 2009 21:30:55 PM	PAGE 30 OF 56	

SAMSUNG PROPRIETARY

THIS DOCUMENT CONTAINS CONFIDENTIAL PROPRIETARY INFORMATION THAT IS SAMSUNG ELECTRONICS CO'S PROPERTY. DO NOT DISCLOSE TO OR DUPLICATE FOR OTHERS EXCEPT AS AUTHORIZED BY SAMSUNG.

CRT

CRT CONNECTOR

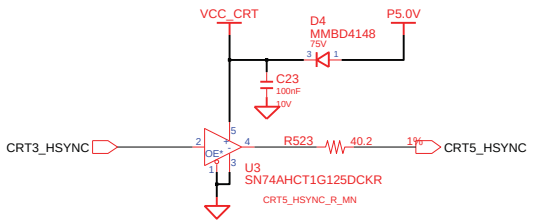

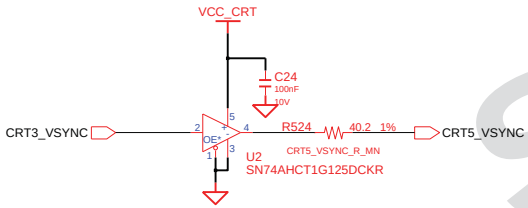

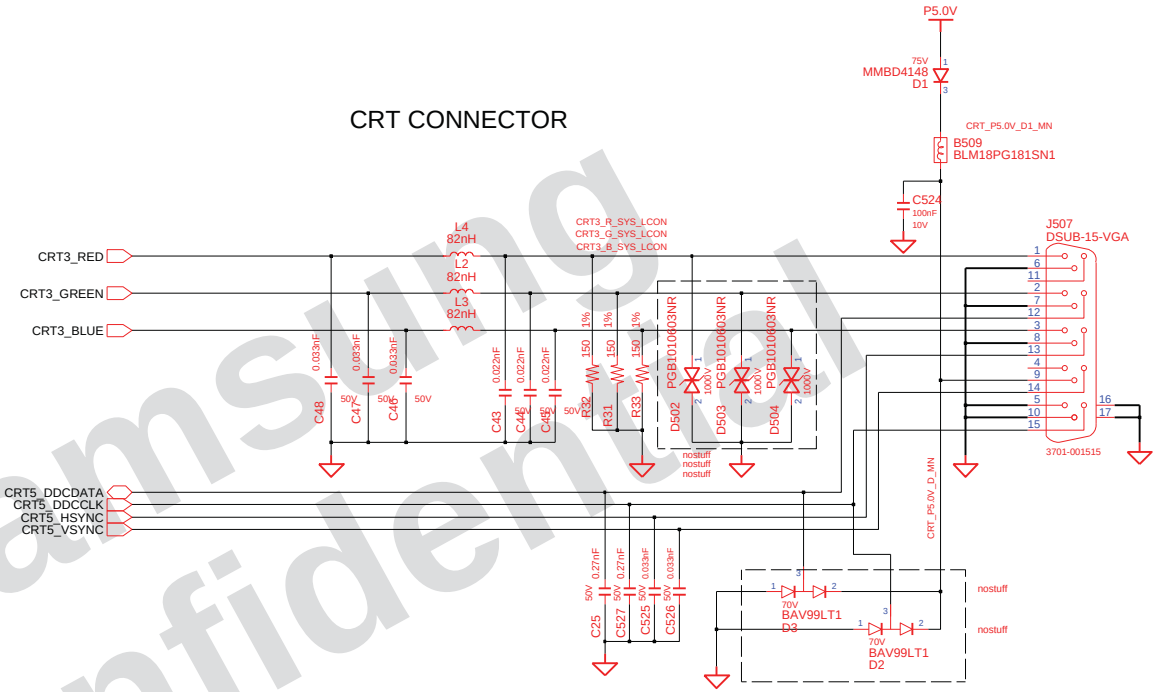

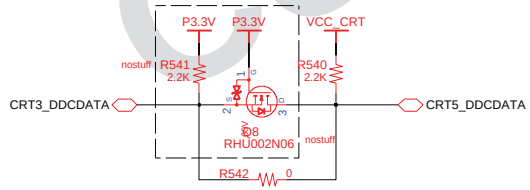

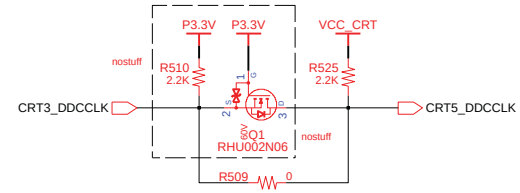

Samsung Confidential

DESIGN: MS YANG	DATE: 8/11/2009	TITLE: BREMEN-M GRAPHICS_IF CRT	SAMSUNG ELECTRONICS
CHECK: SE LEE	DEV. STEP: PV		
APPROVAL: MK KIM	REV: REV 0.9		PART NO.: BA41-01174A
MODULE CODE:	LAST EDIT: October 20, 2009 21:30:55 PM	PAGE 31 OF 56	

SAMSUNG PROPRIETARY
THIS DOCUMENT CONTAINS CONFIDENTIAL PROPRIETARY INFORMATION THAT IS SAMSUNG ELECTRONICS CO'S PROPERTY. DO NOT DISCLOSE TO OR DUPLICATE FOR OTHERS EXCEPT AS AUTHORIZED BY SAMSUNG.

HDMI

FOR HDMI VERIFICATION TEST

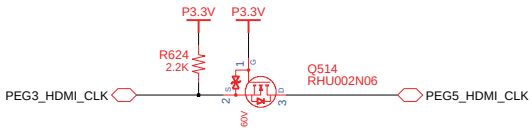

N10x/N11x_40nm HDMI/DP/LVDS support only 3.3V voltage tolerance

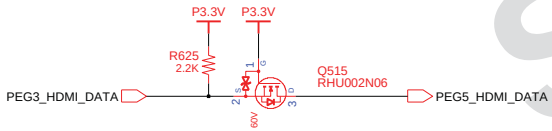

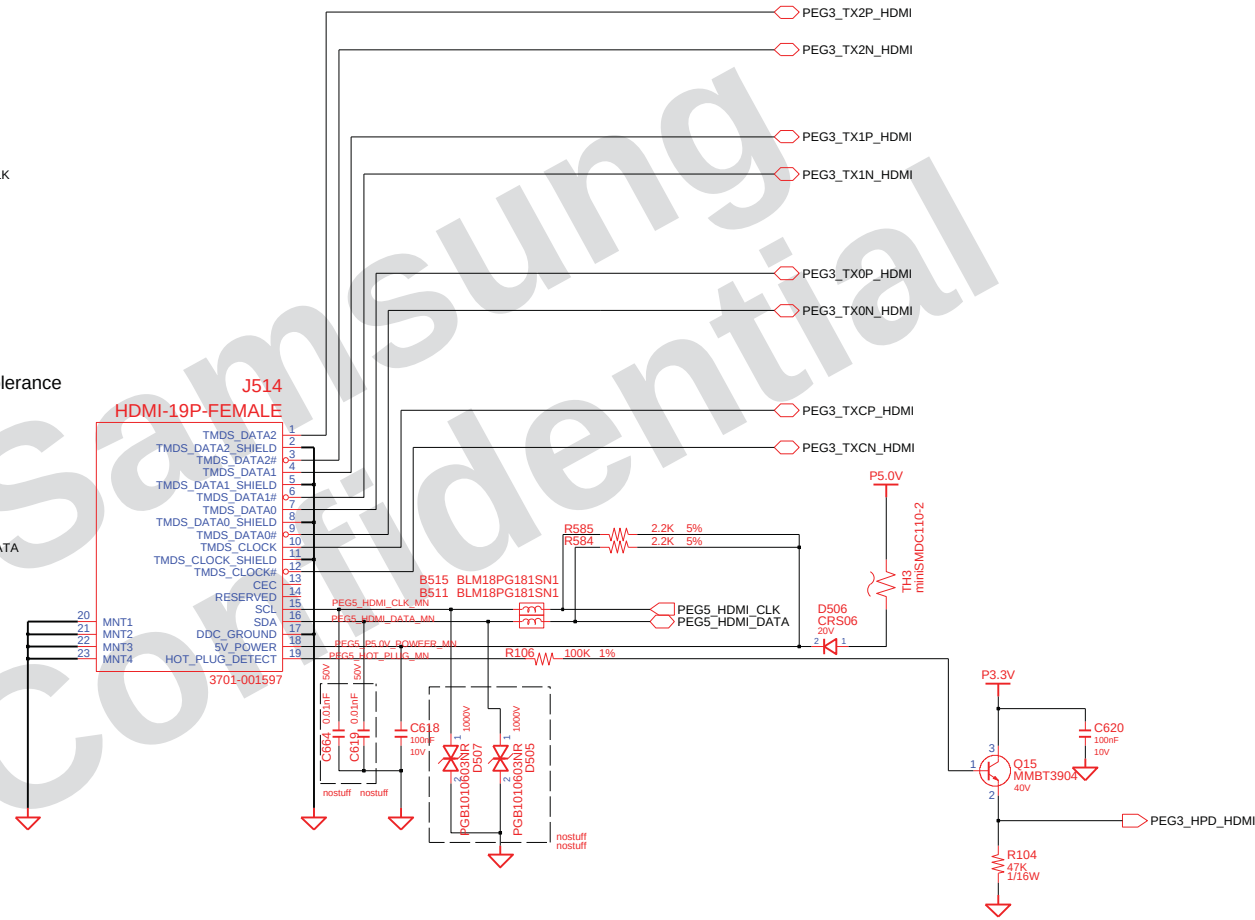

Samsung Confidential

DESIGN: MS YANG	DATE: 8/11/2009	TITLE: BREMEN-M GRAPHICS_IF HDMI	SAMSUNG ELECTRONICS
CHECK: SE LEE	DEV. STEP: PV		
APPROVAL: MK KIM	REV: REV 0.9		PART NO.: BA41-01174A
MODULE CODE:	LAST EDIT: October 20, 2009 21:30:55 PM	PAGE 32 OF 56	

SAMSUNG PROPRIETARY

THIS DOCUMENT CONTAINS CONFIDENTIAL PROPRIETARY INFORMATION THAT IS SAMSUNG ELECTRONICS CO'S PROPERTY. DO NOT DISCLOSE TO OR DUPLICATE FOR OTHERS EXCEPT AS AUTHORIZED BY SAMSUNG.

HD AUDIO

Codec Pin9 Setting	
S/B with Low Voltage IO	S/B without Low Voltage IO
Pin9 : 1.5V	Pin9 : 3.3V

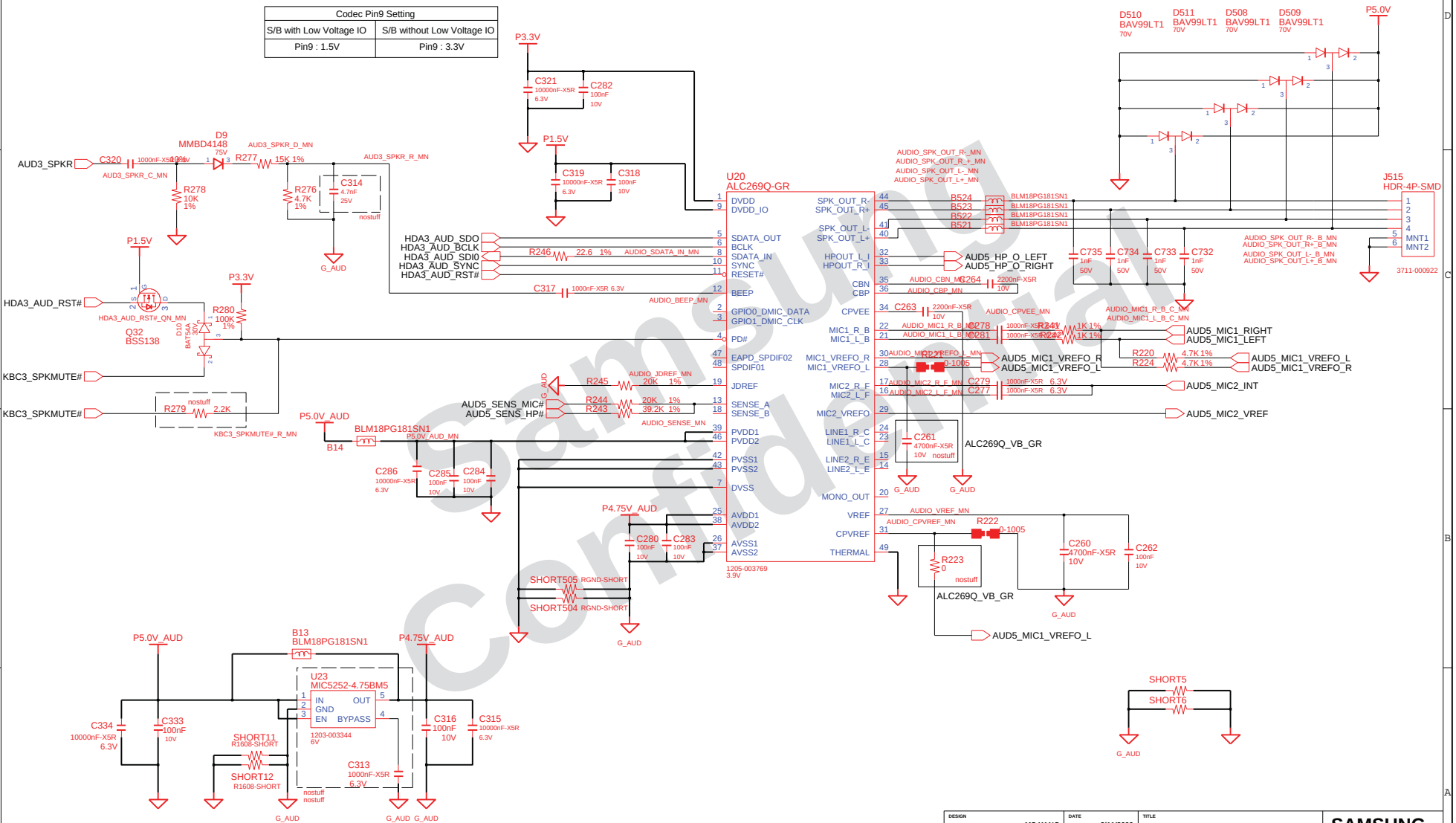

Samsung Confidential

DESIGN: MS YANG	DATE: 8/11/2009	TITLE: BREMEN-M / HDA_CODEC / AUDIO CODEC ALC269	SAMSUNG ELECTRONICS
CHECK: SE LEE	DEV. STEP: PV		
APPROVAL: MK KIM	REV: REV 0.9		PART NO.: BA41-01174A
MODULE CODE:	LAST EDIT: October 20, 2009 21:30:55 PM	PAGE 33 OF 56	

SAMSUNG PROPRIETARY
THIS DOCUMENT CONTAINS CONFIDENTIAL PROPRIETARY INFORMATION THAT IS SAMSUNG ELECTRONICS CO'S PROPERTY. DO NOT DISCLOSE TO OR DUPLICATE FOR OTHERS EXCEPT AS AUTHORIZED BY SAMSUNG.

HEADPHONE(BLACK)

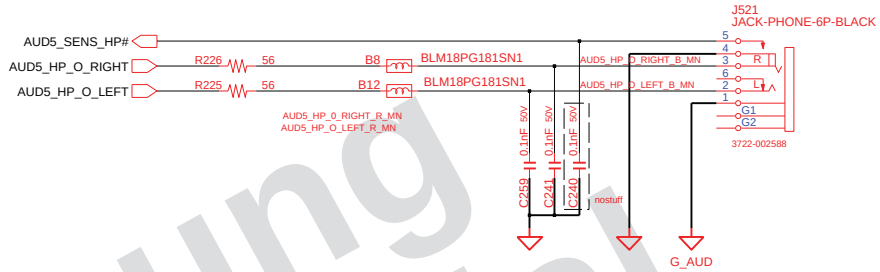

MIC JACK(BLACK)

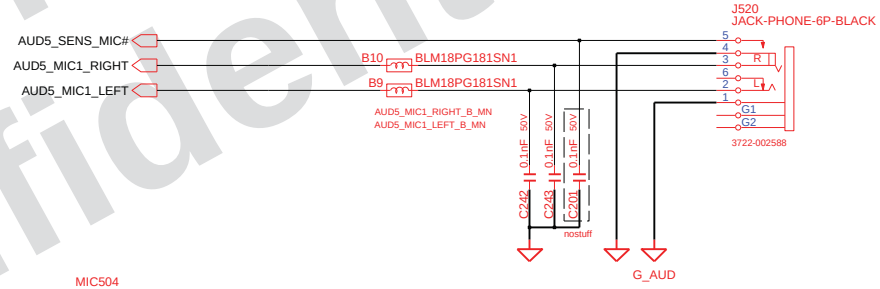

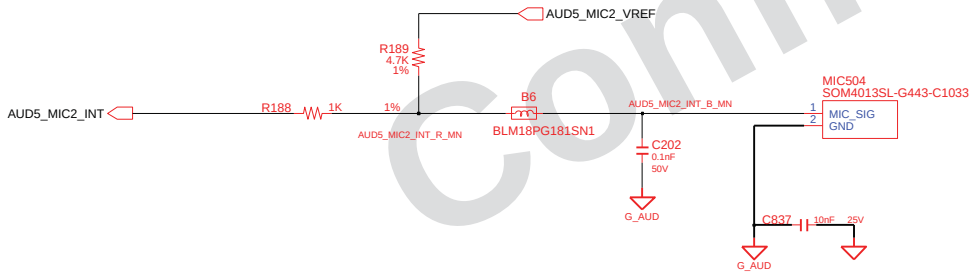

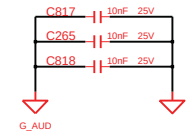

Samsung Confidential

DESIGN: MS YANG	DATE: 8/11/2009	TITLE: BREMEN-M HDA_CODEC AUDIO JACK	SAMSUNG ELECTRONICS
CHECK: SE LEE	DEV. STEP: PV		
APPROVAL: MK KIM	REV: REV 0.9		PART NO.: BA41-01174A
MODULE CODE:	LAST EDIT: October 20, 2009 21:30:55 PM	PAGE 34 OF 56	

SAMSUNG PROPRIETARY

THIS DOCUMENT CONTAINS CONFIDENTIAL PROPRIETARY INFORMATION THAT IS SAMSUNG ELECTRONICS CO'S PROPERTY. DO NOT DISCLOSE TO OR DUPLICATE FOR OTHERS EXCEPT AS AUTHORIZED BY SAMSUNG.

Marvell 88E8059(48pin, QFN,no LED)

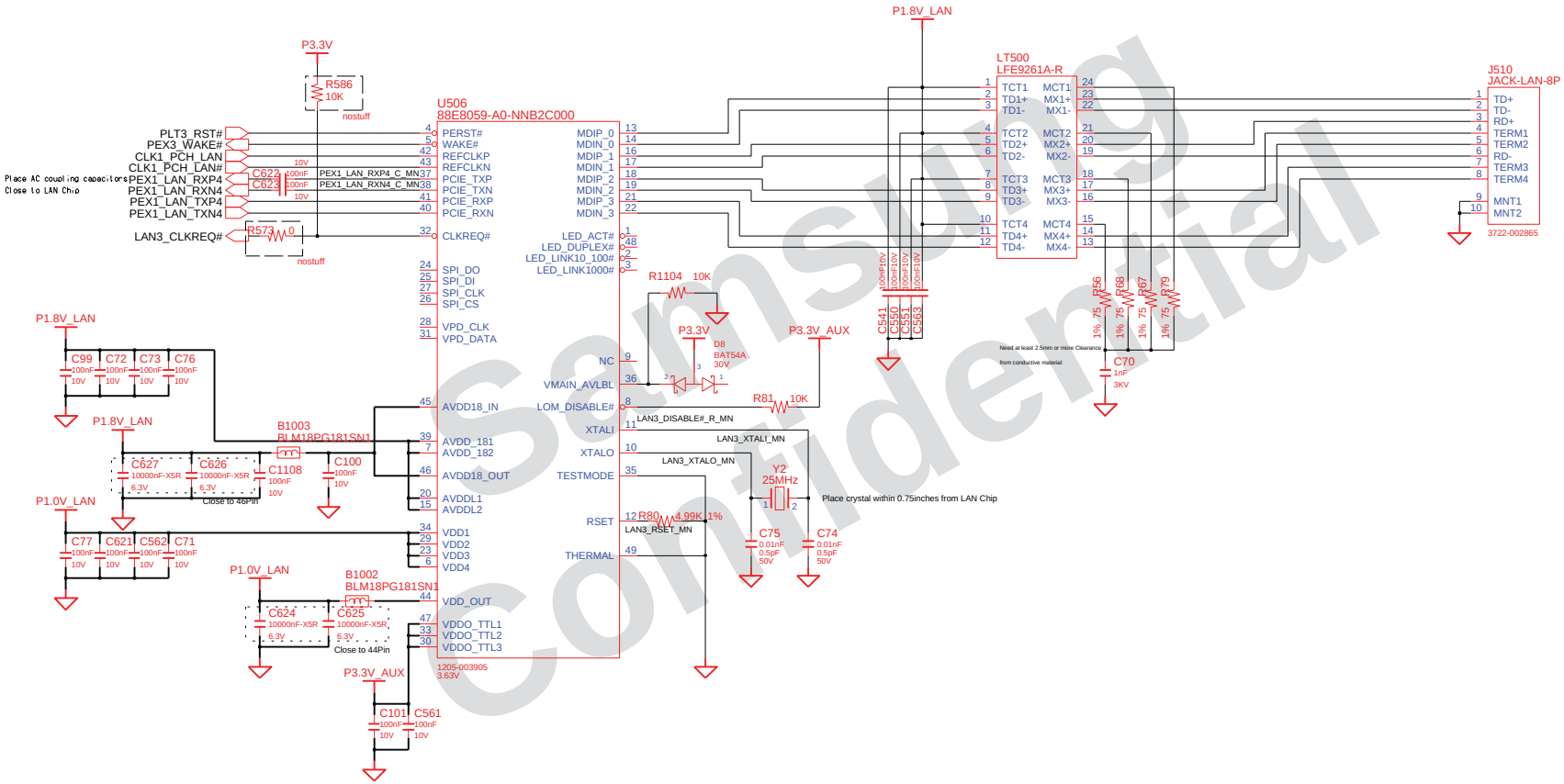

Samsung Confidential

DESIGN: MS YANG	DATE: 8/11/2009	TITLE: BREMEN-M / LAN / LAN_Realtek_RTL8103EL	SAMSUNG ELECTRONICS
CHECK: SE LEE	DEV. STEP: PV		
APPROVAL: MK KIM	REV: REV 0.9		PART NO.: BA41-01174A
MODULE CODE:	LAST EDIT: October 20, 2009 21:30:55 PM	PAGE 35 OF 56	

SAMSUNG PROPRIETARY
THIS DOCUMENT CONTAINS CONFIDENTIAL PROPRIETARY INFORMATION THAT IS SAMSUNG ELECTRONICS CO'S PROPERTY. DO NOT DISCLOSE TO OR DUPLICATE FOR OTHERS EXCEPT AS AUTHORIZED BY SAMSUNG.

Express Card

Express Card Power Switch

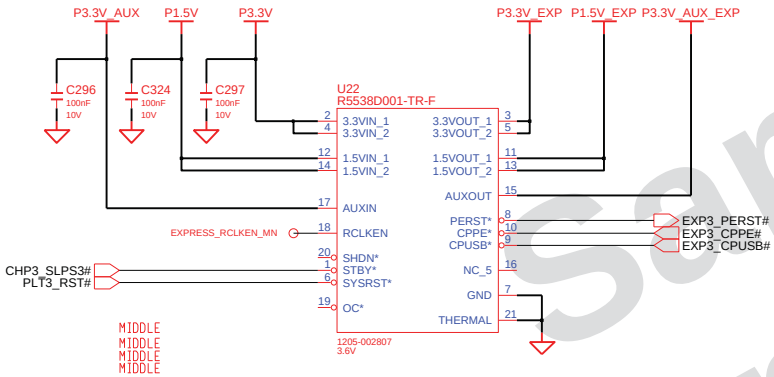

GMT : 1205-003667

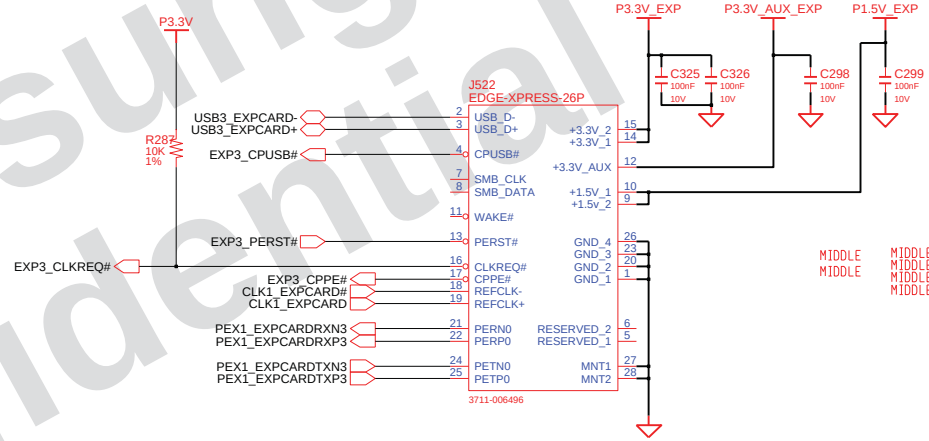

TYPE - I

Samsung Confidential

DESIGN: MS YANG	DATE: 8/11/2009	TITLE: BREMEN-M	SAMSUNG ELECTRONICS
CHECK: SE LEE	DEV. STEP: PV	EXPRESS CARD	
APPROVAL: MK KIM	REV: REV 0.9	EXPRESS CARD	PART NO.: BA41-01174A
MODULE CODE:	LAST EDIT: October 20, 2009 21:30:55 PM	PAGE 36 OF 56	

SAMSUNG PROPRIETARY

THIS DOCUMENT CONTAINS CONFIDENTIAL PROPRIETARY INFORMATION THAT IS SAMSUNG ELECTRONICS CO'S PROPERTY. DO NOT DISCLOSE TO OR DUPLICATE FOR OTHERS EXCEPT AS AUTHORIZED BY SAMSUNG.

3 IN 1 CARD (AU6336)

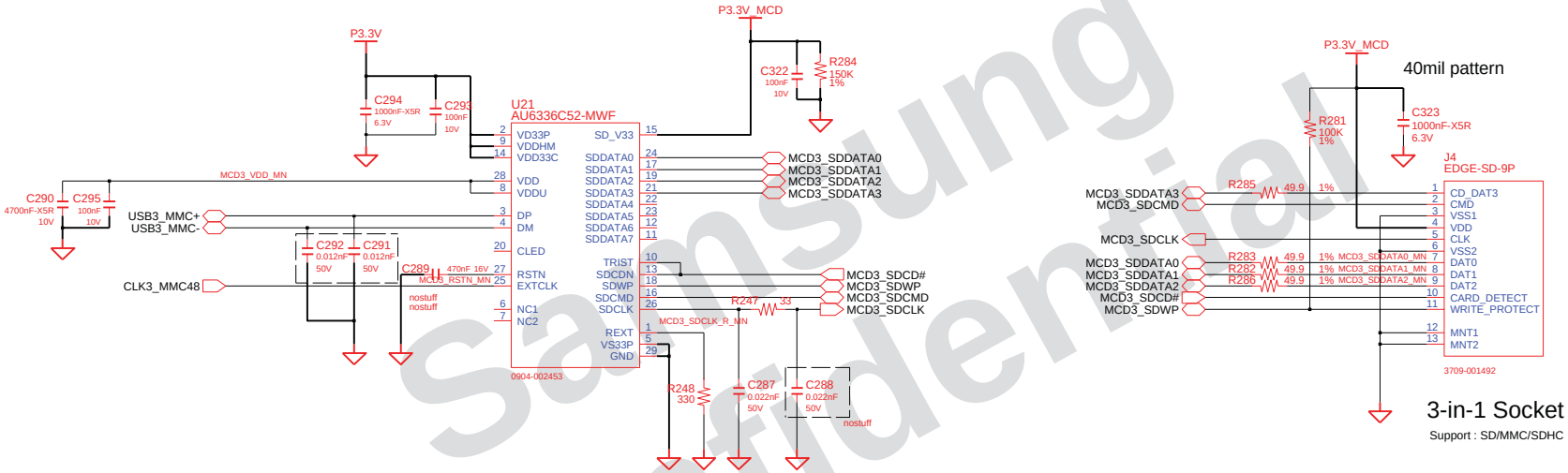

Samsung Confidential

DESIGN: MS YANG	DATE: 8/11/2009	TITLE: BREMEN-M MULTICARD 3 IN 1 CARD(GL827S)	SAMSUNG ELECTRONICS
CHECK: SE LEE	DEV. STEP: PV		
APPROVAL: MK KIM	REV: REV 0.9		PART NO.: BA41-01174A
MODULE CODE:	LAST EDIT: October 20, 2009 21:30:55 PM	PAGE 37 OF 56	

SAMSUNG PROPRIETARY

THIS DOCUMENT CONTAINS CONFIDENTIAL PROPRIETARY INFORMATION THAT IS SAMSUNG ELECTRONICS CO'S PROPERTY. DO NOT DISCLOSE TO OR DUPLICATE FOR OTHERS EXCEPT AS AUTHORIZED BY SAMSUNG.

AMT 6.0 : P3.3V = P3.3V_ALW (Check?)
wakeup pull-up power rail ?
Puma Peak -WiFi (AMT 6.0)
Kilmer Peak - WiFi/WiMax

WLAN, 4mm

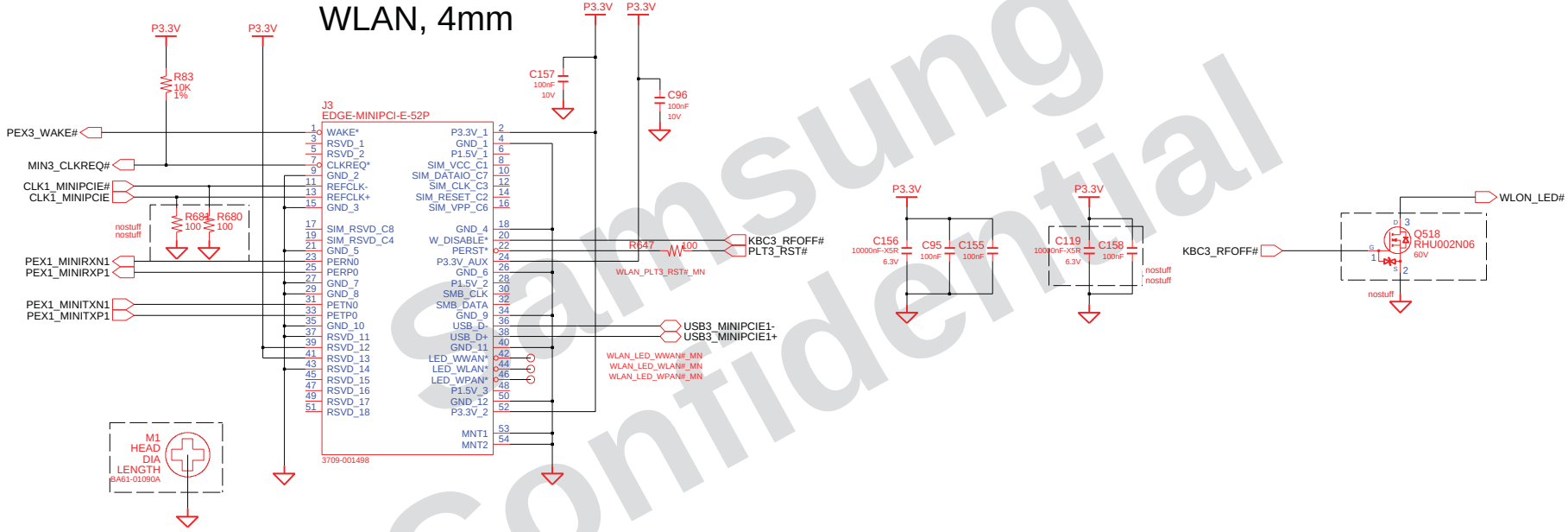

PEM : WLAN minicard (half type only)

Samsung Confidential

DESIGN: MS YANG	DATE: 8/11/2009	TITLE: BREMEN-M	SAMSUNG ELECTRONICS
CHECK: SE LEE	DEV. STEP: PV	MINI_PCIE_CONN	
APPROVAL: MK KIM	REV: REV 0.9	WLAN	PART NO.: BA41-01174A
MODULE CODE	LAST EDIT: October 20, 2009 21:30:55 PM	PAGE 38 OF 56	

SAMSUNG PROPRIETARY
THIS DOCUMENT CONTAINS CONFIDENTIAL PROPRIETARY INFORMATION THAT IS SAMSUNG ELECTRONICS CO'S PROPERTY. DO NOT DISCLOSE TO OR DUPLICATE FOR OTHERS EXCEPT AS AUTHORIZED BY SAMSUNG.

SATA I/F CONN

SATA HDD CONN

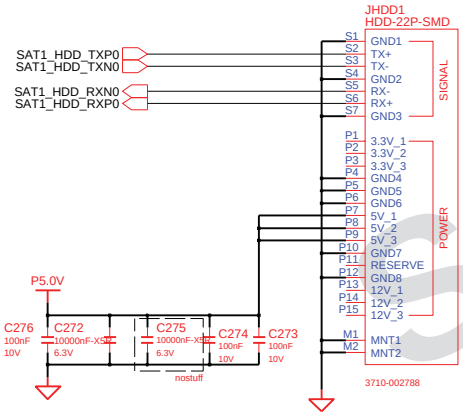

MAIN TO SUB SATA ODD CONN

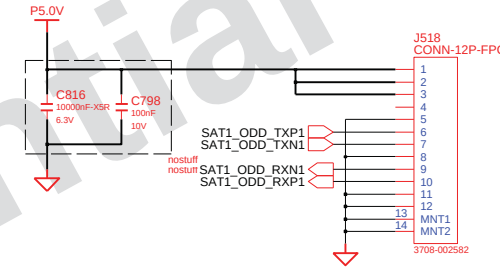

Samsung Confidential

DESIGN: MS YANG	DATE: 8/11/2009	TITLE: BREMEN-M SATA_DEVICES HDD & ODD SUB CONNECTOR	SAMSUNG ELECTRONICS
CHECK: SE LEE	DEV. STEP: PV		
APPROVAL: MK KIM	REV: REV 0.9		PART NO.: BA41-01174A
MODULE CODE:	LAST EDIT: October 20, 2009 21:30:55 PM	PAGE 39 OF 56	

SAMSUNG PROPRIETARY

THIS DOCUMENT CONTAINS CONFIDENTIAL PROPRIETARY INFORMATION THAT IS SAMSUNG ELECTRONICS CO'S PROPERTY. DO NOT DISCLOSE TO OR DUPLICATE FOR OTHERS EXCEPT AS AUTHORIZED BY SAMSUNG.

MAIN BOARD (MICOM)

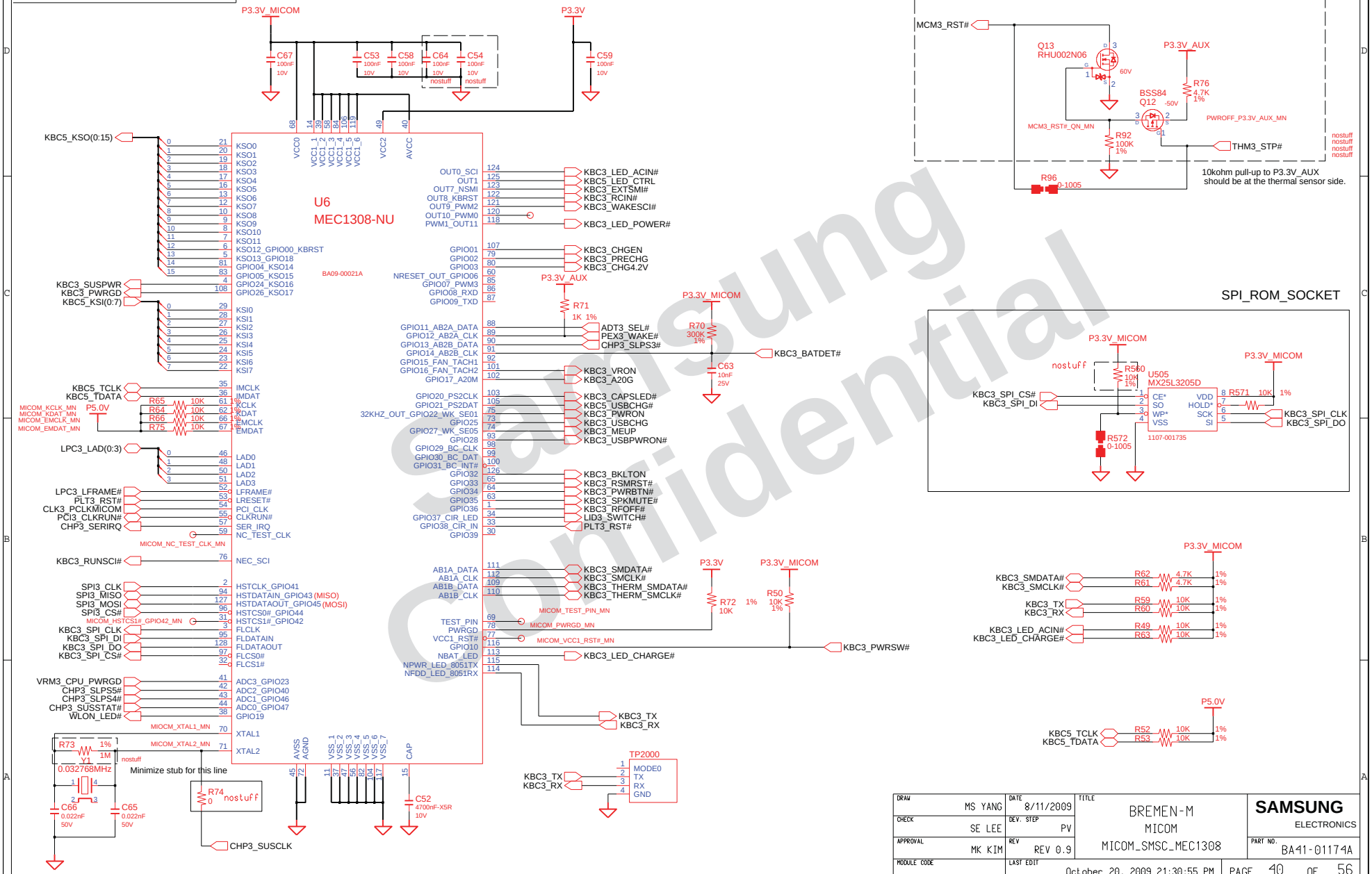

samsung Confidential

DRAW: MS YANG	DATE: 8/11/2009	TITLE: BREMEN-M MICOM MICOM_SMSC_MEC1308	SAMSUNG ELECTRONICS
CHECK: SE LEE	DEV. STEP: PV		
APPROVAL: MK KIM	REV: REV 0.9		PART NO.: BA41-01174A
MODULE CODE	LAST EDIT: October 20, 2009 21:30:55 PM	PAGE 40 OF 56	

SAMSUNG PROPRIETARY
THIS DOCUMENT CONTAINS CONFIDENTIAL PROPRIETARY INFORMATION THAT IS SAMSUNG ELECTRONICS CO'S PROPERTY. DO NOT DISCLOSE TO OR DUPLICATE FOR OTHERS EXCEPT AS AUTHORIZED BY SAMSUNG.

Micom Glue Logic

KEYBOARD

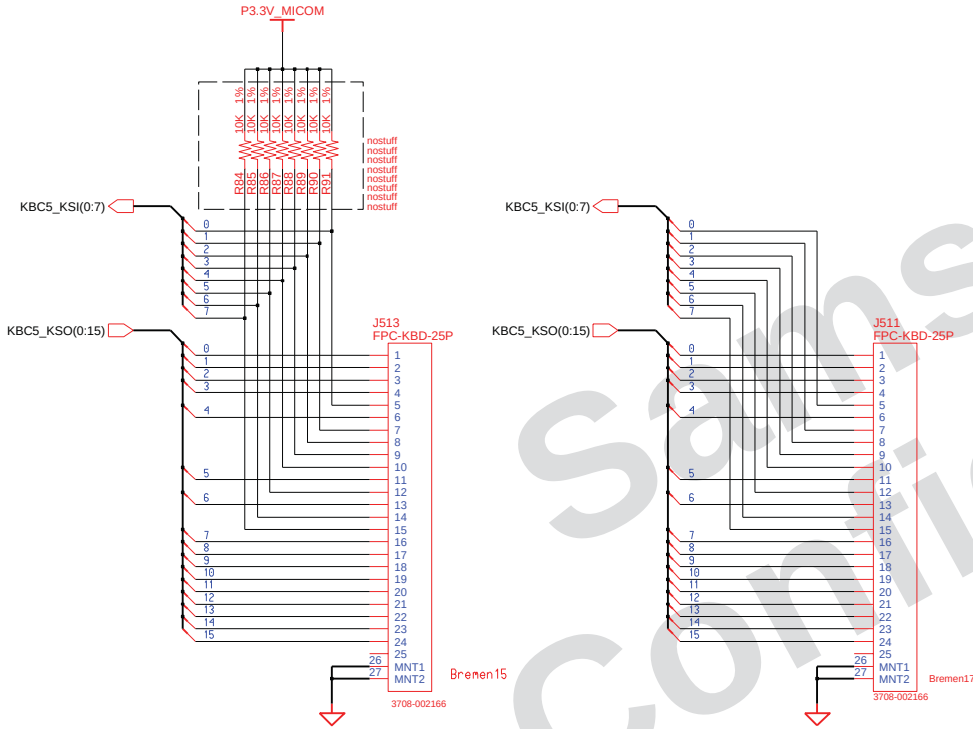

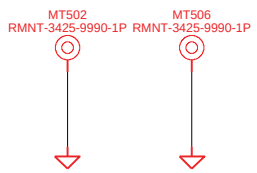

Keyboard Mount

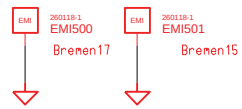

LID_SWITCH

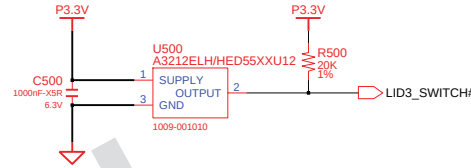

TOUCHPAD

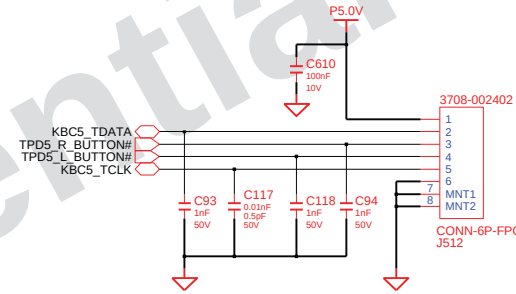

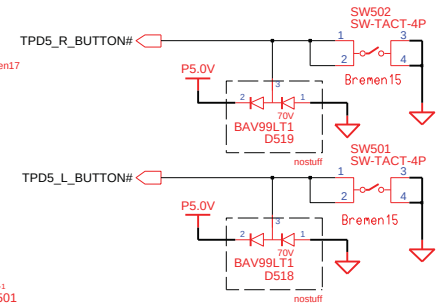

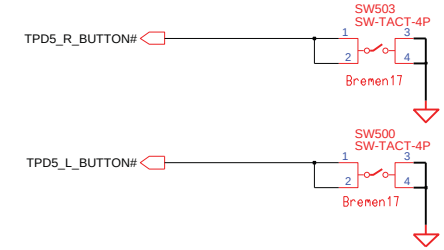

DESIGN: MS YANG	DATE: 8/11/2009	TITLE: BREMEN-M MICOM GLUE LOGIC KETBOARD & TOUCHPAD	SAMSUNG ELECTRONICS
CHECK: SE LEE	DEV. STEP: PV		
APPROVAL: MK KIM	REV: REV 0.9		PART NO.: BA41-01174A
MODULE CODE:	LAST EDIT: October 20, 2009 21:30:55 PM	PAGE 41 OF 56	

Samsung Confidential

SAMSUNG PROPRIETARY

THIS DOCUMENT CONTAINS CONFIDENTIAL PROPRIETARY INFORMATION THAT IS SAMSUNG ELECTRONICS CO'S PROPERTY. DO NOT DISCLOSE TO OR DUPLICATE FOR OTHERS EXCEPT AS AUTHORIZED BY SAMSUNG.

FUNCTION KEY LED

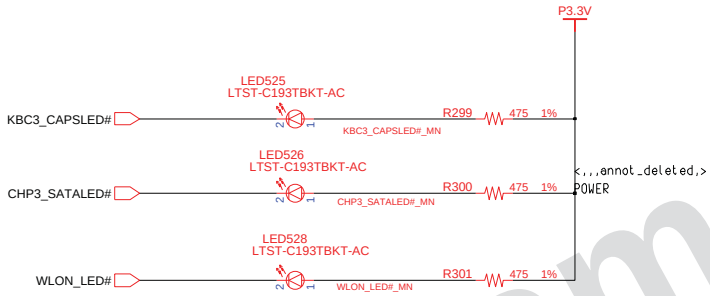

ADAPTERIN/CHARGING LED

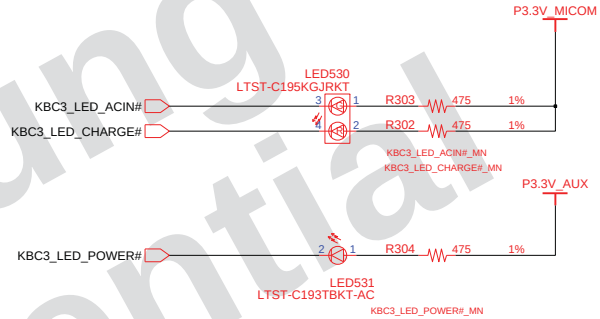

Samsung Confidential

DRAW: MS YANG	DATE: 8/11/2009	TITLE: BREMEN-M	SAMSUNG ELECTRONICS
CHECK: SE LEE	DEV. STEP: PV	LED_SWITCH	
APPROVAL: MK KIM	REV: REV 0.9	LED_SWITCH	PART NO.: BA41-01174A
MODULE CODE:	LAST EDIT: October 20, 2009 21:30:55 PM	PAGE 42 OF 56	

SAMSUNG PROPRIETARY
THIS DOCUMENT CONTAINS CONFIDENTIAL PROPRIETARY INFORMATION THAT IS SAMSUNG ELECTRONICS CO'S PROPERTY. DO NOT DISCLOSE TO OR DUPLICATE FOR OTHERS EXCEPT AS AUTHORIZED BY SAMSUNG.

USB + eSATA CONNECTOR

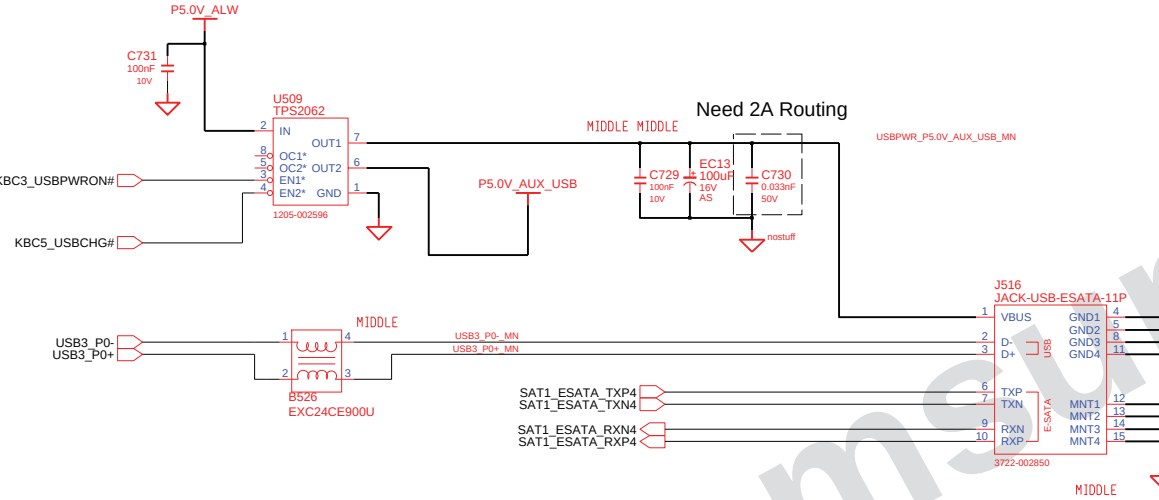

USB Single connector

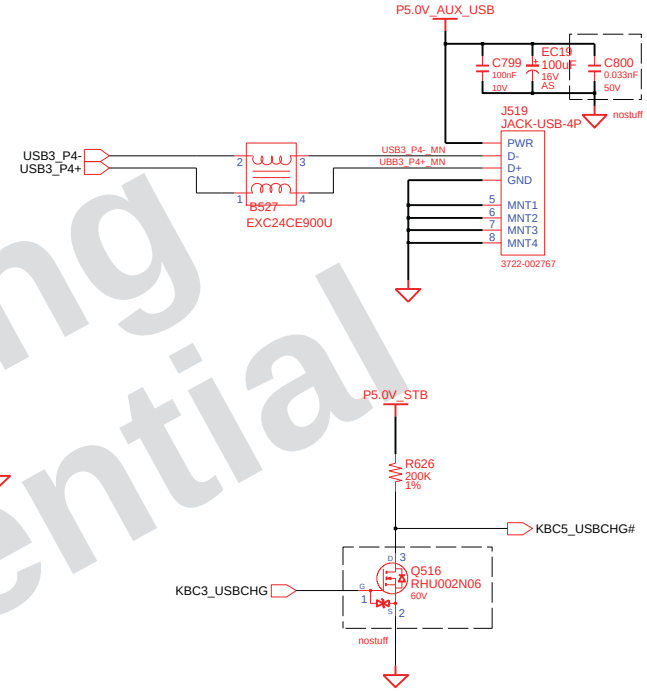

for sleep in charge

USB SUB B'D CONNECTOR

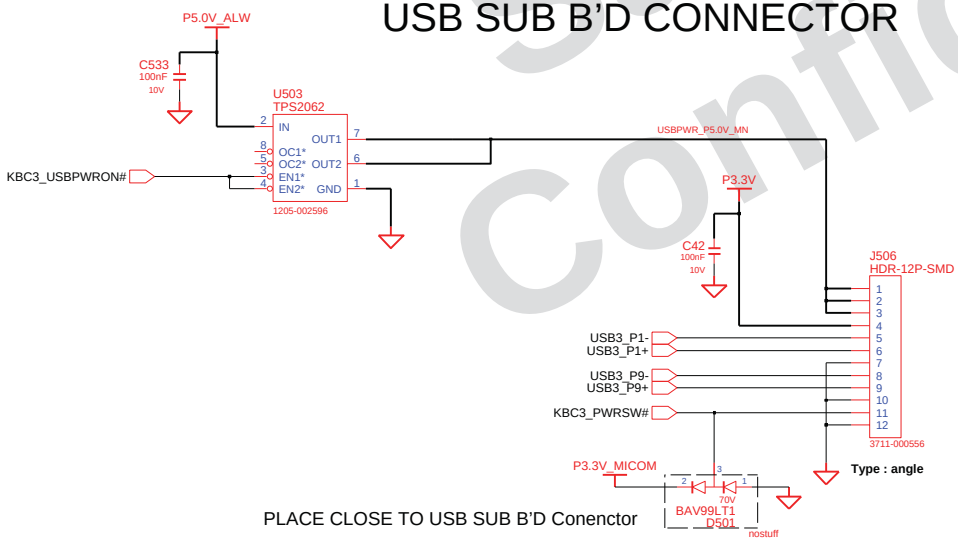

PLACE CLOSE TO USB SUB B'D Conenctor

Samsung Confidential

DESIGN: MS YANG	DATE: 8/11/2009	TITLE: BREMEN-M USB_CONN USB & eSATA	SAMSUNG ELECTRONICS
CHECK: SE LEE	DEV. STEP: PV		
APPROVAL: MK KIM	REV: REV 0.9		PART NO.: BA41-01174A
MODULE CODE:	LAST EDIT: October 20, 2009 21:30:55 PM	PAGE 43 OF 56	

SAMSUNG PROPRIETARY
THIS DOCUMENT CONTAINS CONFIDENTIAL PROPRIETARY INFORMATION THAT IS SAMSUNG ELECTRONICS CO'S PROPERTY. DO NOT DISCLOSE TO OR DUPLICATE FOR OTHERS EXCEPT AS AUTHORIZED BY SAMSUNG.

Touchpad LED

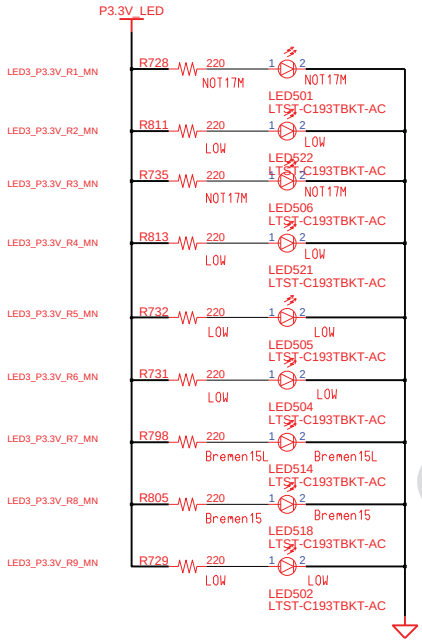

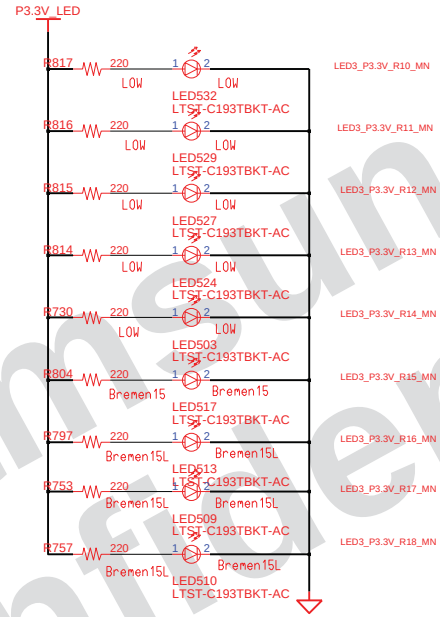

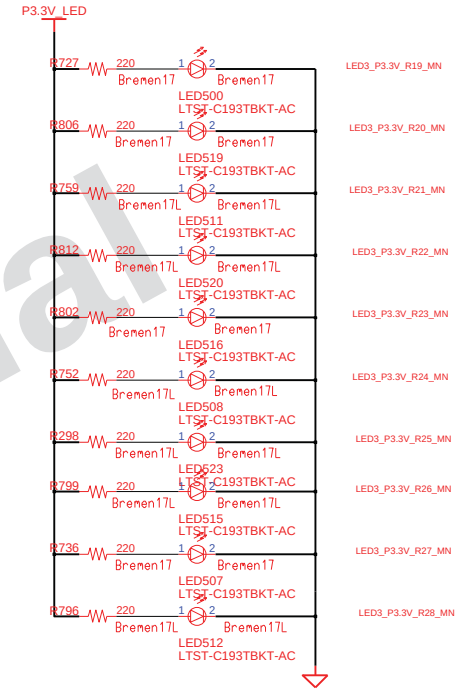

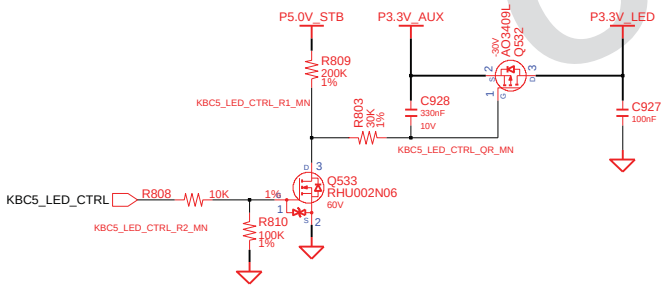

Samsung Confidential

DESIGN: MS YANG	DATE: 8/11/2009	TITLE: BREMEN-M TOUCHPAD LED TOUCHPAD LED	SAMSUNG ELECTRONICS
CHECK: SE LEE	DEV. STEP: PV		
APPROVAL: MK KIM	REV: REV 0.9		PART NO.: BA41-01174A
MODULE CODE:	LAST EDIT: October 20, 2009 21:30:55 PM	PAGE 44 OF 56	

SAMSUNG PROPRIETARY
THIS DOCUMENT CONTAINS CONFIDENTIAL PROPRIETARY INFORMATION THAT IS SAMSUNG ELECTRONICS CO'S PROPERTY. DO NOT DISCLOSE TO OR DUPLICATE FOR OTHERS EXCEPT AS AUTHORIZED BY SAMSUNG.

USB I/F Devices

Bluetooth Interface

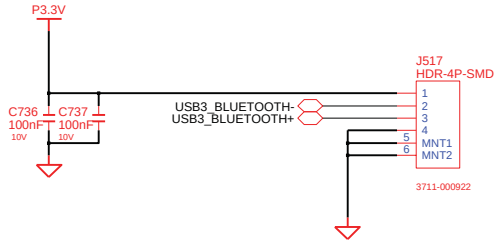

CAMERA (17Inch)

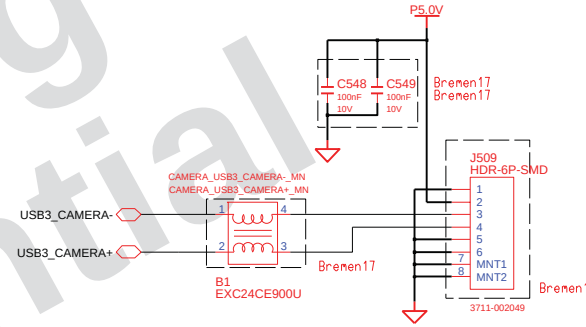

80h PORT DEBUG

For MICOM 80H Debug Port Test

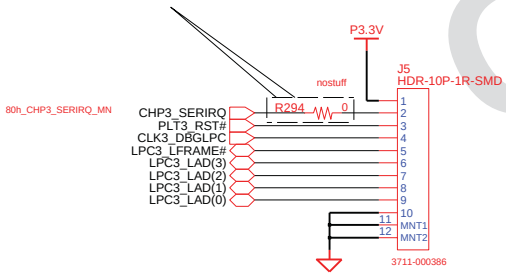

Samsung Confidential

DESIGN: MS YANG	DATE: 8/11/2009	TITLE: BREMEN-M	SAMSUNG ELECTRONICS
CHECK: SE LEE	DEV. STEP: PV	USB_DEVICES	
APPROVAL: MK KIM	REV: REV 0.9	BLUETOOTH & CAMERA	PART NO.: BA41-01174A
MODULE CODE:	LAST EDIT: October 20, 2009 21:30:55 PM	PAGE 45 OF 56	

SAMSUNG PROPRIETARY
THIS DOCUMENT CONTAINS CONFIDENTIAL PROPRIETARY INFORMATION THAT IS SAMSUNG ELECTRONICS CO'S PROPERTY. DO NOT DISCLOSE TO OR DUPLICATE FOR OTHERS EXCEPT AS AUTHORIZED BY SAMSUNG.

CHARGER & POWER MANAGEMENT

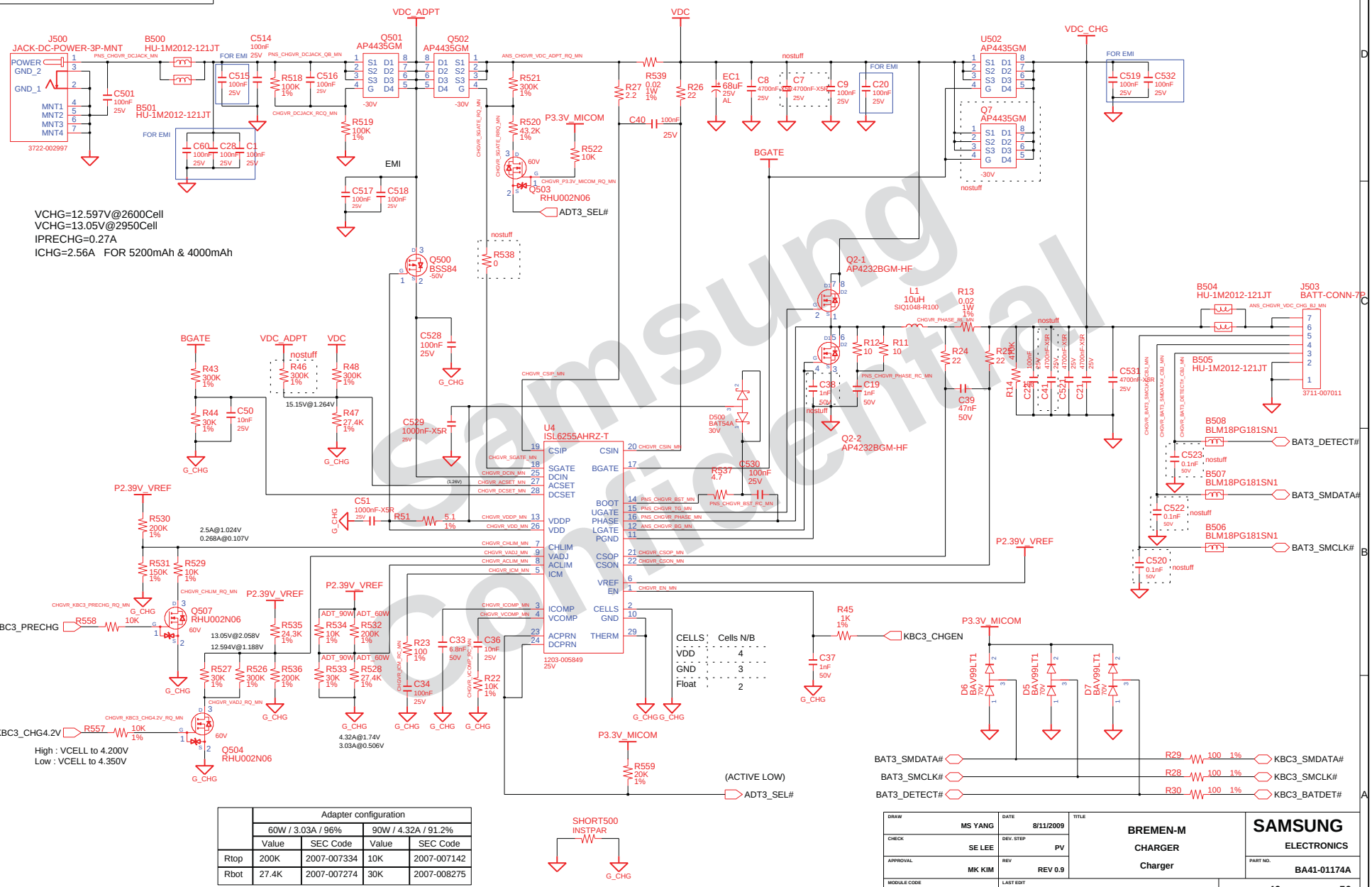

	Adapter configuration			
	60W / 3.03A / 96%		90W / 4.32A / 91.2%	
	Value	SEC Code	Value	SEC Code
Rtop	200K	2007-007334	10K	2007-007142
Rbot	27.4K	2007-007274	30K	2007-008275

DRAW	MS YANG	DATE	8/11/2009
CHECK	SE LEE	DEV. STEP	PV
APPROVAL	MK KIM	REV	REV 0.9
MODULE CODE	undefined	LAST EDIT	October 20, 2009 21:30:55 PM
TITLE	BREMEN-M CHARGER Charger		
SAMSUNG ELECTRONICS		PART NO.	BA41-01174A
PAGE	46	OF	56

Samsung Confidential

SAMSUNG PROPRIETARY

THIS DOCUMENT CONTAINS CONFIDENTIAL PROPRIETARY INFORMATION THAT IS SAMSUNG ELECTRONICS CO'S PROPERTY. DO NOT DISCLOSE TO OR DUPLICATE FOR OTHERS EXCEPT AS AUTHORIZED BY SAMSUNG.

P3.3V_AUX & P5.0V_AUX

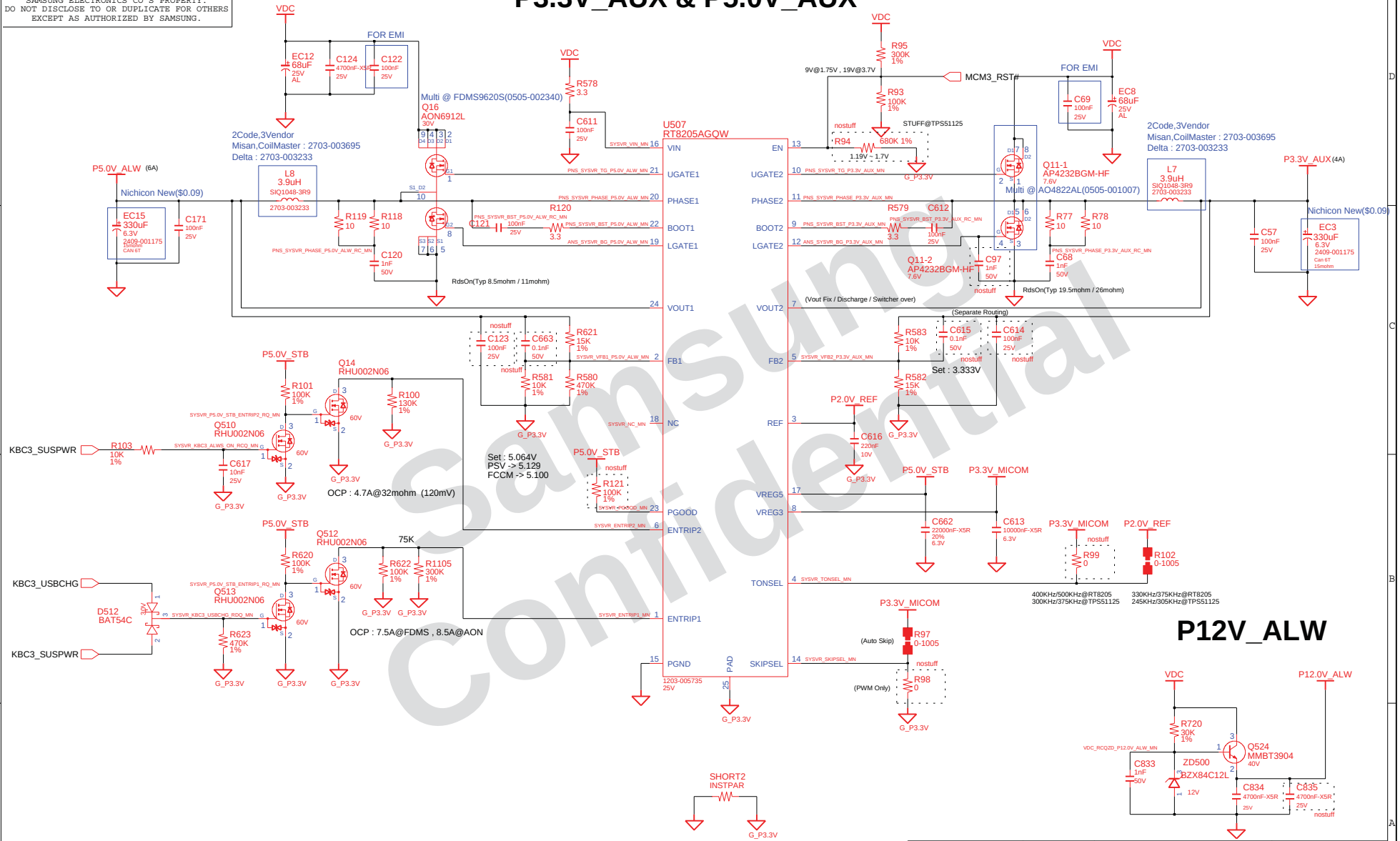

Samsung Confidential

DESIGN: MS YANG	DATE: 8/11/2009	TITLE: BREMEN-M	SAMSUNG ELECTRONICS
CHECK: SE LEE	DEV. STEP: PV	P3.3V_ALW / P5.0V_ALW	
APPROVAL: MK KIM	REV: REV 0.9	P3.3V_AUX & P5.0V_AUX	PART NO.: BA41-01174A
MODULE CODE	LAST EDIT: October 20, 2009 21:30:55 PM	PAGE 47 OF 56	

SAMSUNG PROPRIETARY

THIS DOCUMENT CONTAINS CONFIDENTIAL PROPRIETARY INFORMATION THAT IS SAMSUNG ELECTRONICS CO'S PROPERTY. DO NOT DISCLOSE TO OR DUPLICATE FOR OTHERS EXCEPT AS AUTHORIZED BY SAMSUNG.

CHIPSET POWER(P1.05V_VTT)

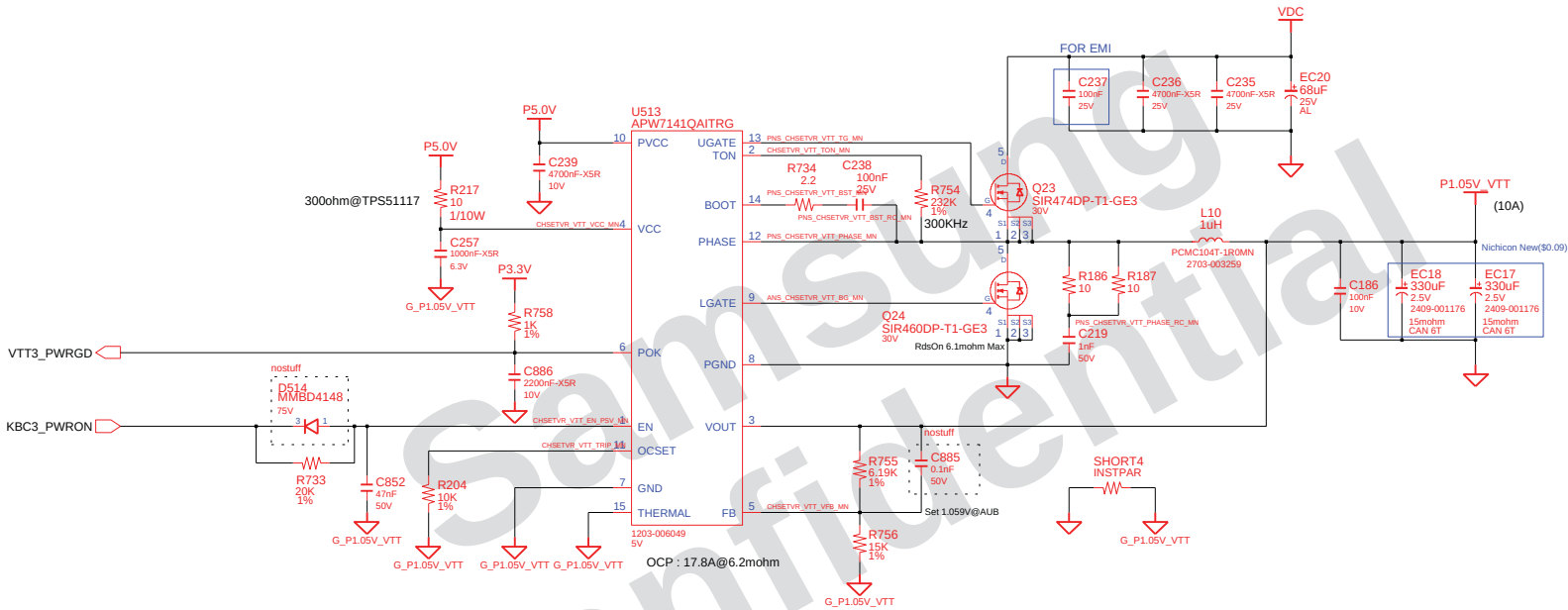

Samsung Confidential

DRAW: MS YANG	DATE: 8/11/2009	TITLE: BREMEN-M Chipset Power Chipset Power (P1.05VTT)	SAMSUNG ELECTRONICS
CHECK: SE LEE	DEV. STEP: PV		
APPROVAL: MK KIM	REV: REV 0.9		PART NO.: BA41-01174A
MODULE CODE: undefined	LAST EDIT: October 20, 2009 21:30:55 PM	PAGE 48 OF 56	

SAMSUNG PROPRIETARY

THIS DOCUMENT CONTAINS CONFIDENTIAL PROPRIETARY INFORMATION THAT IS SAMSUNG ELECTRONICS CO'S PROPERTY. DO NOT DISCLOSE TO OR DUPLICATE FOR OTHERS EXCEPT AS AUTHORIZED BY SAMSUNG.

DDR3 Power

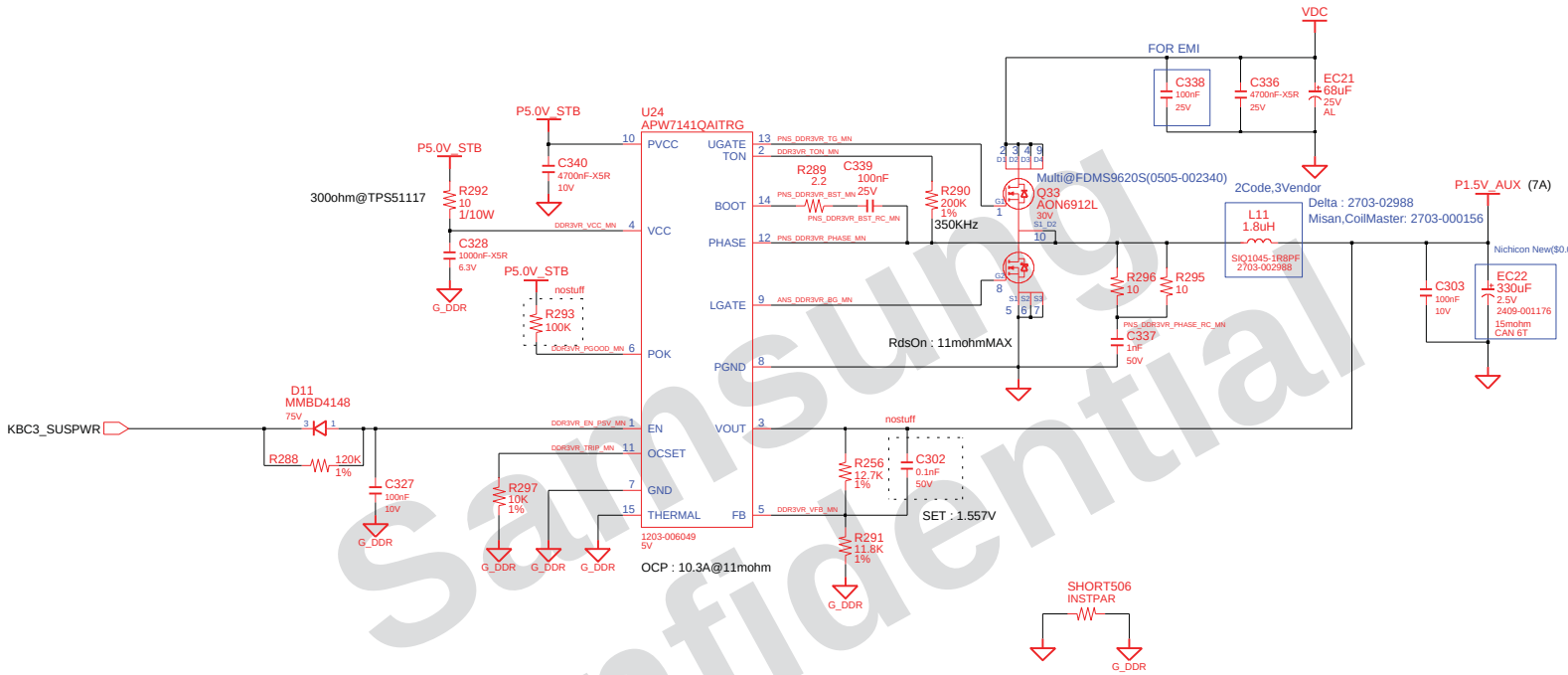

DDR3 VTT(0.75V)

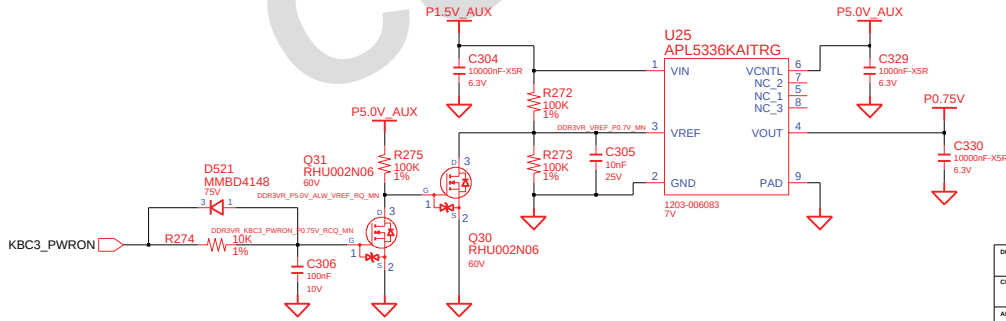

DRAW: MS YANG	DATE: 8/11/2009	TITLE: BREMEN-M	SAMSUNG ELECTRONICS
CHECK: SE LEE	DEV. STEP: PV	PWR_MEMORY	
APPROVAL: MK KIM	REV: REV 0.9	DDR3 POWER	PART NO.: BA41-01174A
MODULE CODE: undefined	LAST EDIT: October 20, 2009 21:30:55 PM	PAGE 49 OF 56	

Samsung Confidential

SAMSUNG PROPRIETARY

THIS DOCUMENT CONTAINS CONFIDENTIAL PROPRIETARY INFORMATION THAT IS SAMSUNG ELECTRONICS CO'S PROPERTY. DO NOT DISCLOSE TO OR DUPLICATE FOR OTHERS EXCEPT AS AUTHORIZED BY SAMSUNG.

CPU VRM (IMVP-6.5)

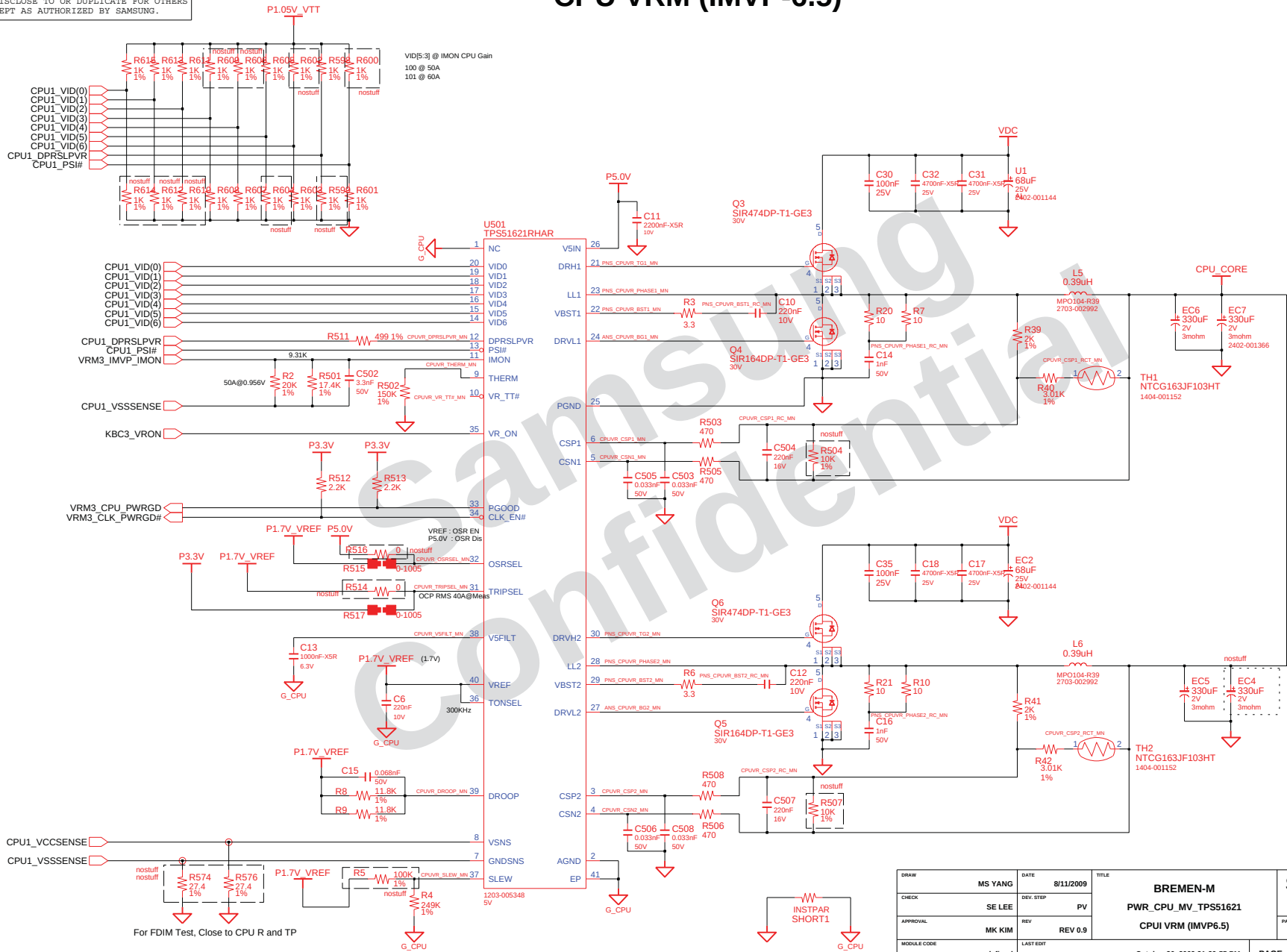

DRAW: MS YANG	DATE: 8/11/2009	TITLE: BREMEN-M	SAMSUNG ELECTRONICS
CHECK: SE LEE	DEV. STEP: PV	PWR_CPU_MV_TPS51621	
APPROVAL: MK KIM	REV: REV 0.9	CPUI VRM (IMVP6.5)	PART NO.: BA41-01174A
MODULE CODE: undefined	LAST EDIT: October 20, 2009 21:30:55 PM	PAGE 50 OF 56	

Samsung Confidential

SAMSUNG PROPRIETARY
THIS DOCUMENT CONTAINS CONFIDENTIAL PROPRIETARY INFORMATION THAT IS SAMSUNG ELECTRONICS CO'S PROPERTY. DO NOT DISCLOSE TO OR DUPLICATE FOR OTHERS EXCEPT AS AUTHORIZED BY SAMSUNG.

External Graphic Core Power

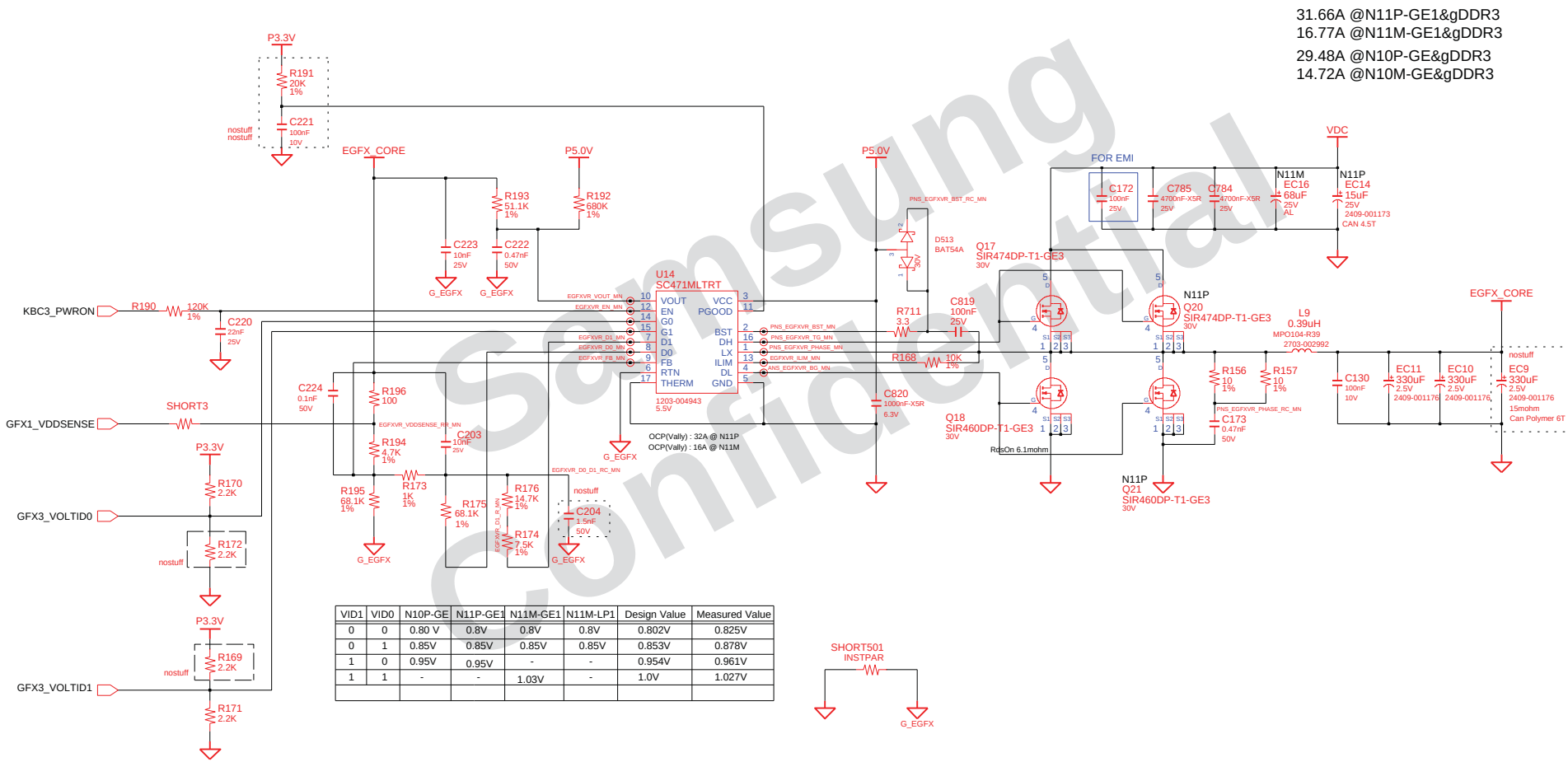

VID1	VID0	N10P-GE	N11P-GE1	N11M-GE1	N11M-LP1	Design Value	Measured Value
0	0	0.80 V	0.8V	0.8V	0.8V	0.802V	0.825V
0	1	0.85V	0.85V	0.85V	0.85V	0.853V	0.878V
1	0	0.95V	0.95V	-	-	0.954V	0.961V
1	1	-	-	1.03V	-	1.0V	1.027V

Samsung Confidential

DESIGN: MS YANG	DATE: 8/11/2009	TITLE: BREMEN-M PWR_GFX_MV_EXT External Graphic Power	SAMSUNG ELECTRONICS
CHECK: SE LEE	DEV. STEP: PV		
APPROVAL: MK KIM	REV: REV 0.9		PART NO.: BA41-01174A
MODULE CODE	LAST EDIT: October 20, 2009 21:30:55 PM	PAGE 51 OF 56	

SAMSUNG PROPRIETARY
THIS DOCUMENT CONTAINS CONFIDENTIAL PROPRIETARY INFORMATION THAT IS SAMSUNG ELECTRONICS CO'S PROPERTY. DO NOT DISCLOSE TO OR DUPLICATE FOR OTHERS EXCEPT AS AUTHORIZED BY SAMSUNG.

Switched Power

Switched Power On (P3.3V)

Multi@AP2607GY,Si3433BDV

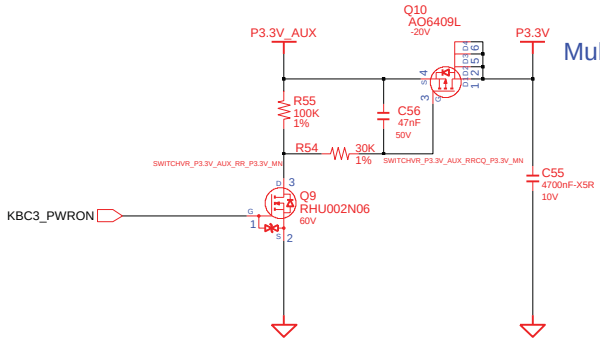

Sleep'n Charger

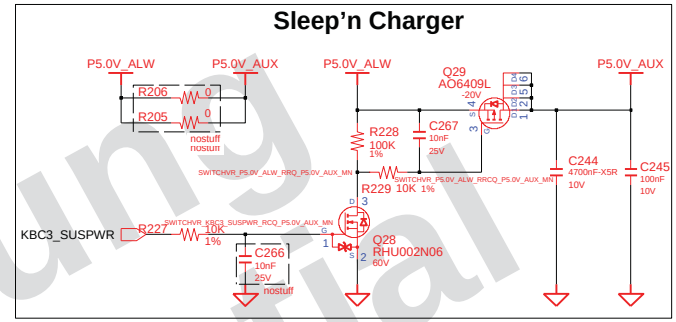

Switched Power On (P1.5V)

Multi@AP6680BGM,AO4476L

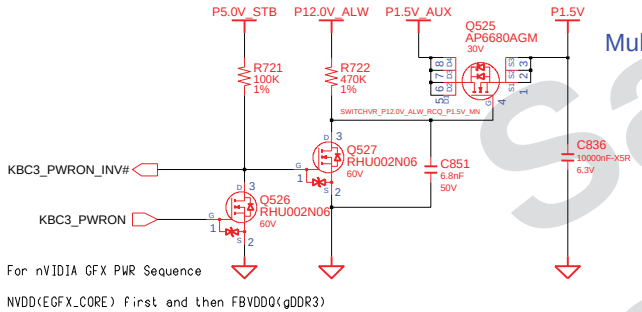

P1.8V(LDO)

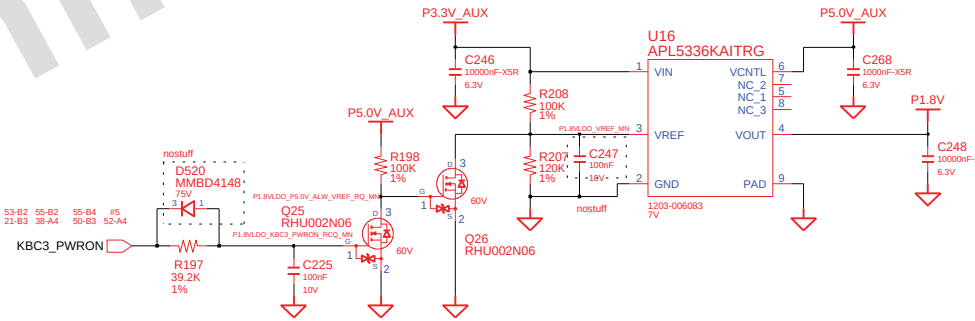

Switched Power On (P5.0V)

Multi@Si443DDY

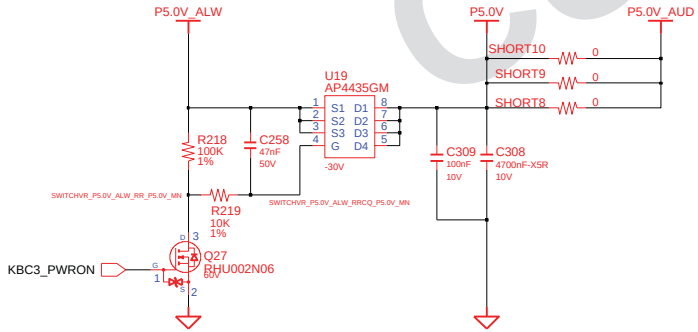

DRAW: MS YANG	DATE: 8/11/2009	TITLE: BREMEN-M	SAMSUNG ELECTRONICS
CHECK: SE LEE	DEV. STEP: PV	PWR_MV_SWITCHED	
APPROVAL: MK KIM	REV: REV 0.9	SWITCHED POWER	PART NO.: BA41-01174A
MODULE CODE:	LAST EDIT: October 20, 2009 21:30:55 PM	PAGE 52 OF 56	

Samsung Confidential

SAMSUNG PROPRIETARY

THIS DOCUMENT CONTAINS CONFIDENTIAL PROPRIETARY INFORMATION THAT IS SAMSUNG ELECTRONICS CO'S PROPERTY. DO NOT DISCLOSE TO OR DUPLICATE FOR OTHERS EXCEPT AS AUTHORIZED BY SAMSUNG.

POWER DISCHARGER

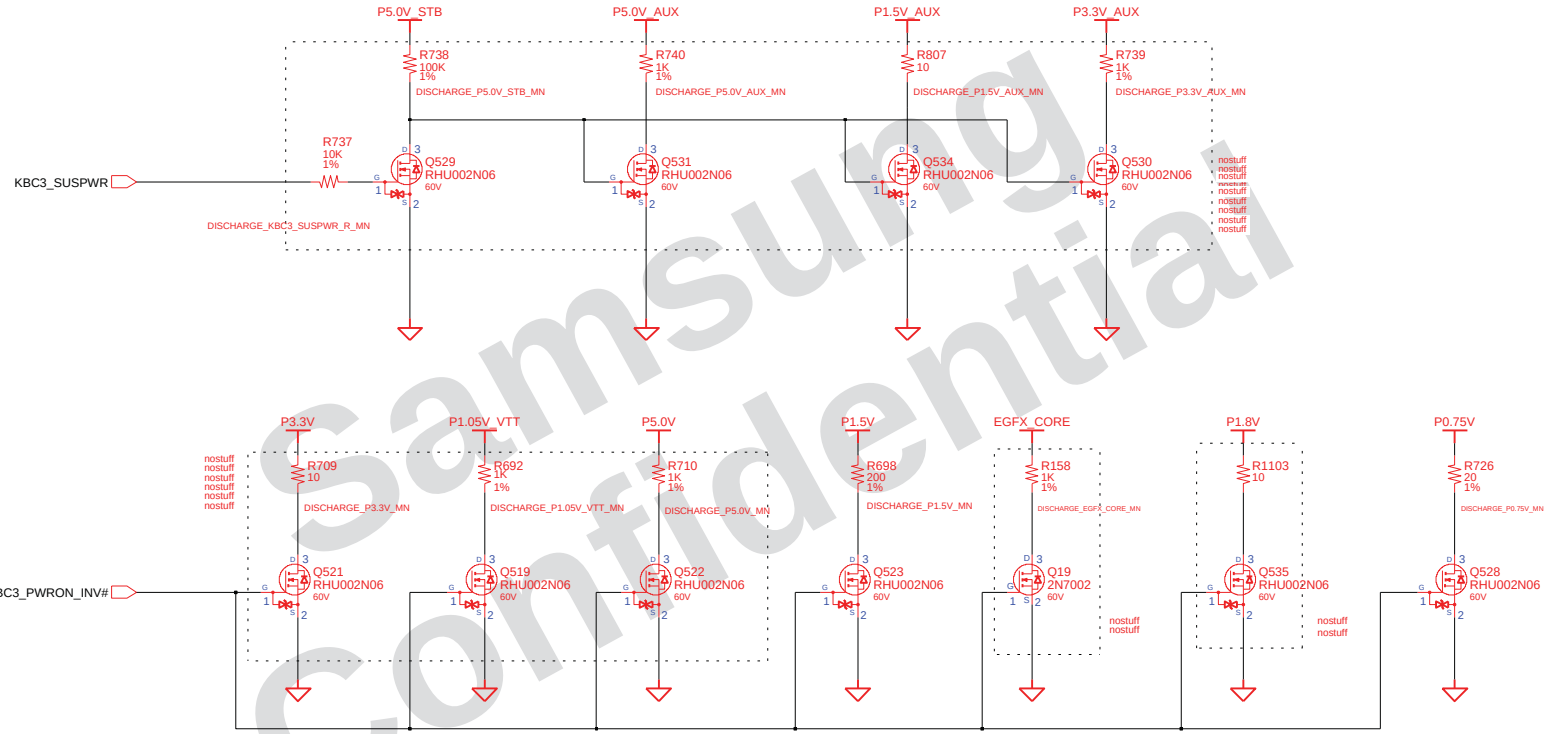

Samsung Confidential

DRAW: MS YANG	DATE: 8/11/2009	TITLE: BREMEN-M	SAMSUNG ELECTRONICS
CHECK: SE LEE	DEV. STEP: PV	PWR_MV_DISCHARGER	
APPROVAL: MK KIM	REV: REV 0.9	DISCHARGING LOGIC	PART NO.: BA41-01174A
MODULE CODE: undefined	LAST EDIT: October 20, 2009 21:30:55 PM	PAGE 53 OF 56	

SAMSUNG PROPRIETARY
THIS DOCUMENT CONTAINS CONFIDENTIAL PROPRIETARY INFORMATION THAT IS SAMSUNG ELECTRONICS CO'S PROPERTY. DO NOT DISCLOSE TO OR DUPLICATE FOR OTHERS EXCEPT AS AUTHORIZED BY SAMSUNG.

2 USB PORT & POWER S/W SUB B'D

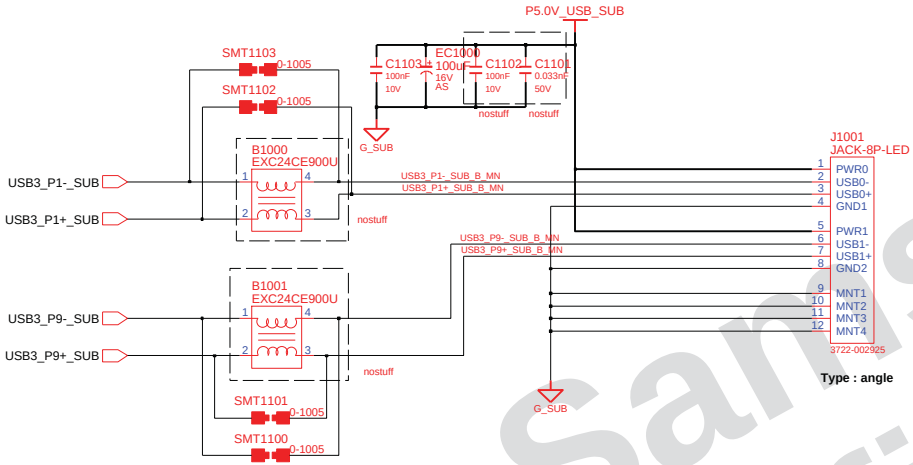

SUB TO MAIN USB CONN

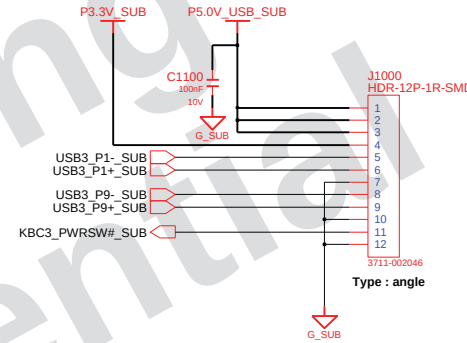

Power ON LED

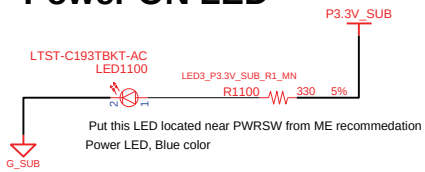

Power Button

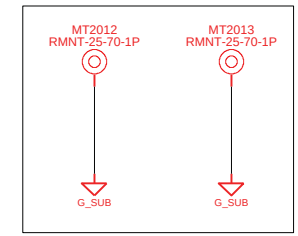

USB sub board mount hole

Samsung Confidential

DESIGN: MS YANG	DATE: 8/11/2009	TITLE: BREMEN-M / SUB BOARD1 / 2 USB & POWER SW	SAMSUNG ELECTRONICS
CHECK: SE LEE	DEV. STEP: PV		
APPROVAL: MK KIM	REV: REV 0.9		PART NO.: BA41-01174A
MODULE CODE:	LAST EDIT: October 20, 2009 21:30:55 PM	PAGE 54 OF 56	

SAMSUNG PROPRIETARY
THIS DOCUMENT CONTAINS CONFIDENTIAL PROPRIETARY INFORMATION THAT IS SAMSUNG ELECTRONICS CO'S PROPERTY. DO NOT DISCLOSE TO OR DUPLICATE FOR OTHERS EXCEPT AS AUTHORIZED BY SAMSUNG.

SATA ODD SUB BOARD

SATA ODD SUB BOARD

SATA ODD CONN

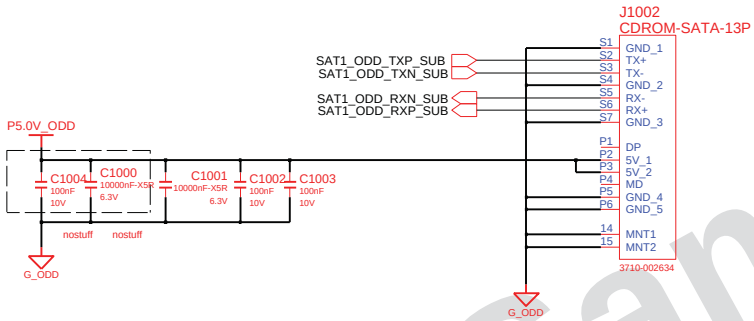

SUB TO MAIN SATA ODD CONN

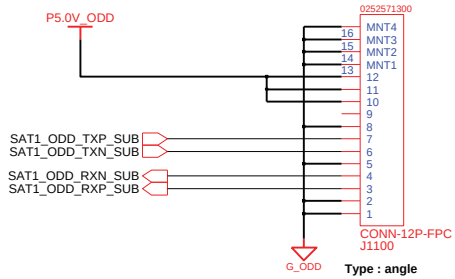

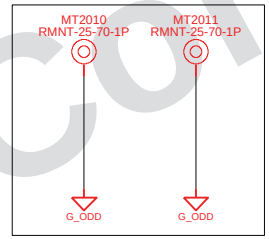

ODD sub board mount hole

17" BATTERY SUBBOARD

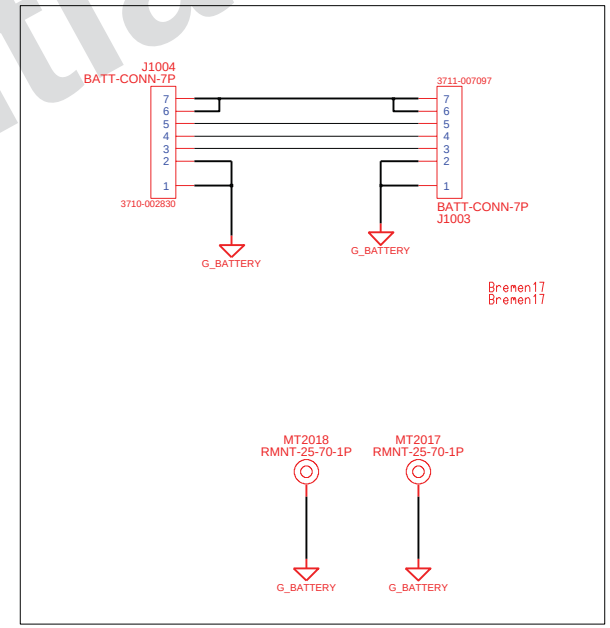

Samsung Confidential

DRAW: MS YANG	DATE: 8/11/2009	TITLE: BREMEN-M / SUB BOARD2 / SATA ODD SUB BOARD	SAMSUNG ELECTRONICS
CHECK: SE LEE	DEV. STEP: PV		
APPROVAL: MK KIM	REV: REV 0.9		PART NO.: BA41-01174A
MODULE CODE: undefined	LAST EDIT: October 20, 2009 21:30:55 PM	PAGE 55 OF 56	

SAMSUNG PROPRIETARY
THIS DOCUMENT CONTAINS CONFIDENTIAL PROPRIETARY INFORMATION THAT IS SAMSUNG ELECTRONICS CO'S PROPERTY. DO NOT DISCLOSE TO OR DUPLICATE FOR OTHERS EXCEPT AS AUTHORIZED BY SAMSUNG.

ICT PORT

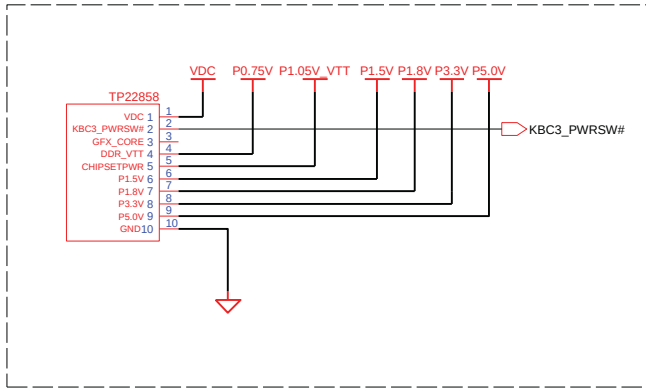

Mainboard Mount ((30,80)x9), (30,90)x9), (25,70)x1))

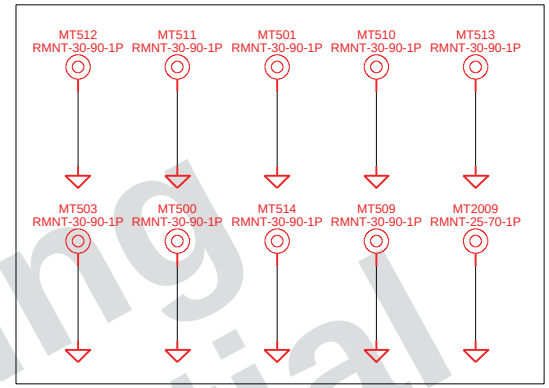

Top : (30,80) x 9
Bot : (30,90) x 9

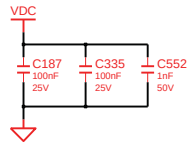

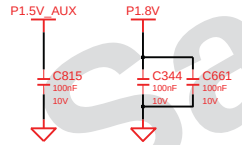

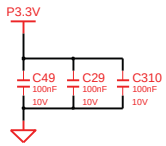

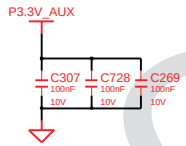

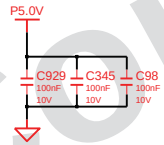

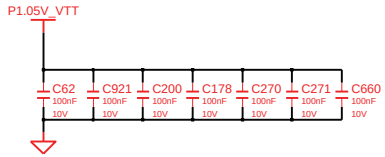

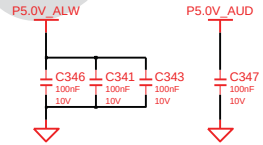

Samsung Confidential

DRAW: MS YANG	DATE: 8/11/2009	TITLE: BREMEN-M ICT PORT ICT PORT	SAMSUNG ELECTRONICS
CHECK: SE LEE	DEV. STEP: PV		
APPROVAL: MK KIM	REV: REV 0.9		PART NO.: BA41-01174A
MODULE CODE:	LAST EDIT: October 20, 2009 21:30:55 PM	PAGE 56 OF 56	

www.s-manuals.com