FRONT VIEW

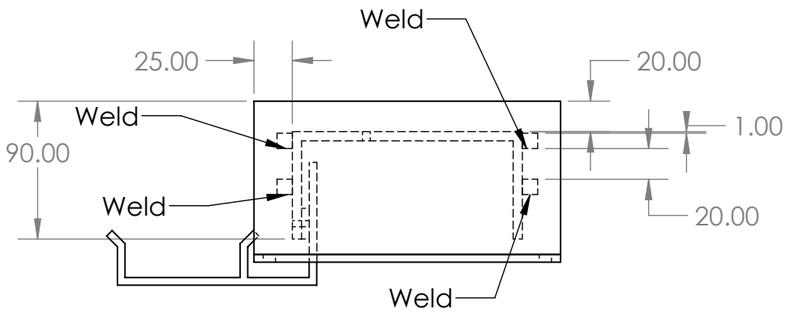

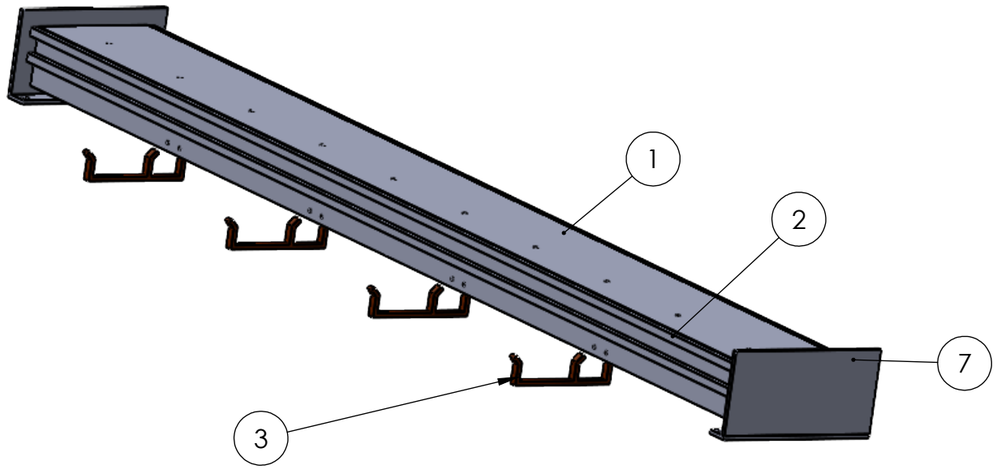

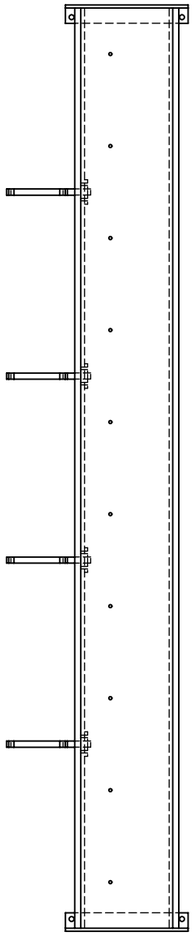

TOP VIEW

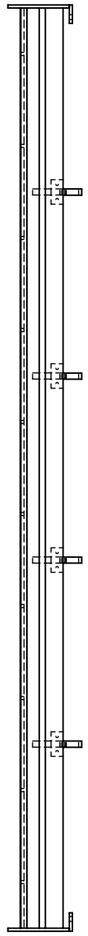

SIDE VIEW

ITEM NO.	DESCRIPTION	Material	QTY.
1	C Channel	Mild Steel	1
2	X_Railings	Mild Steel	4
3	Drag_Chain_Bracket	Mild Steel	4
4	M5x25 dowel	Mild Steel	10
5	M6x30 hex bolt	Mild Steel	4
6	M6 Nut	Mild Steel	4
7	C_Covering	Mild Steel	2
8	Bracket_Plate	Mild Steel	4

UNLESS OTHERWISE SPECIFIED:
DIMENSIONS ARE IN MILLIMETERS
SURFACE FINISH:
TOLERANCES:
LINEAR:
ANGULAR:

FINISH:

DEBURR AND BREAK SHARP EDGES

DO NOT SCALE DRAWING

REVISION

Karthik Swaminathan

	NAME	SIGNATURE	DATE
DRAWN			
CHK'D			
APPV'D			
MFG			
Q.A			

MATERIAL:

WEIGHT:

TITLE:

X_Assembly

All Dimensions are in mm

A3

SCALE:1:20

SHEET 1 OF 1