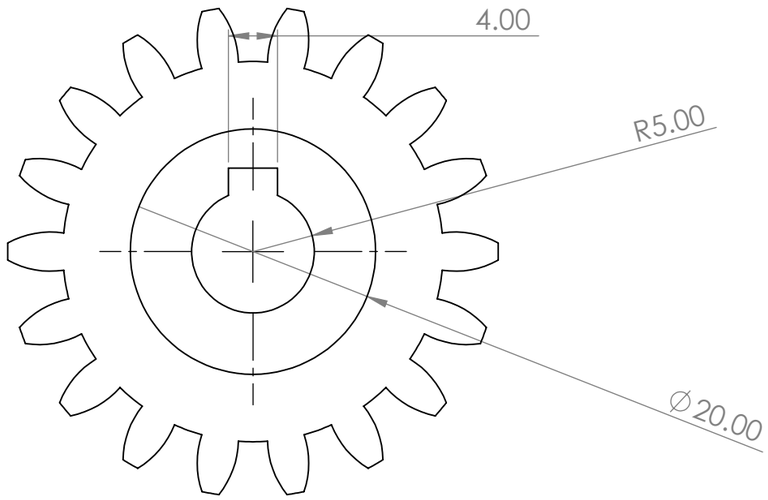

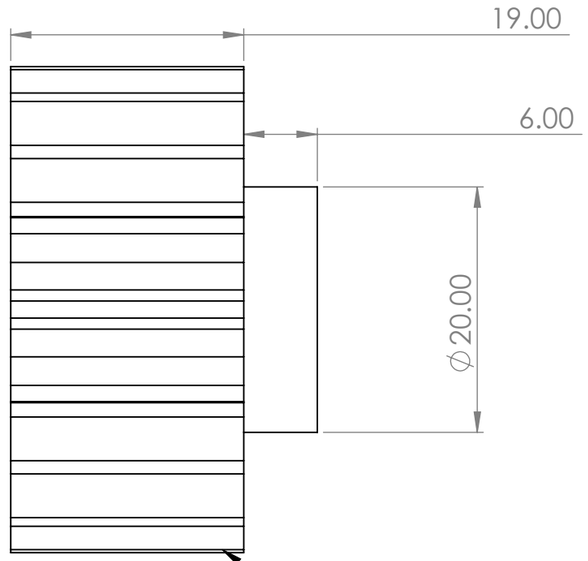

Module - 2
No of teeth = 18

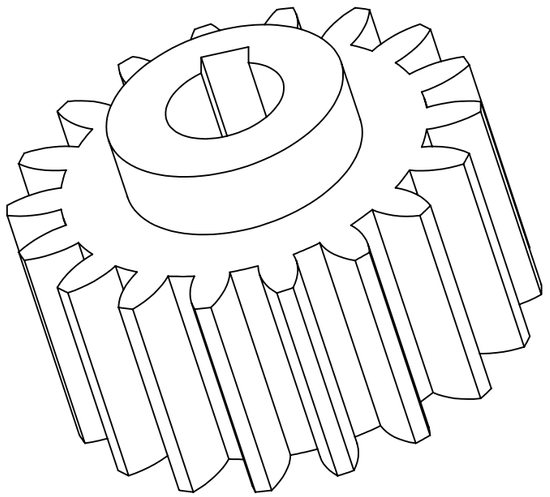

UNLESS OTHERWISE SPECIFIED: DIMENSIONS ARE IN MILLIMETERS SURFACE FINISH: TOLERANCES: LINEAR: ANGULAR:	FINISH:				DEBURR AND BREAK SHARP EDGES	DO NOT SCALE DRAWING / REVISION
						Karthik Swaminathan
	NAME	SIGNATURE	DATE			TITLE: Pinion
DRAWN						
CHK'D						
APPV'D						
MFG						
Q.A				MATERIAL:		DWG NO. All Dimensions are in mm / A3
				WEIGHT:		SCALE:2:1 / SHEET 1 OF 1