FRONT VIEW

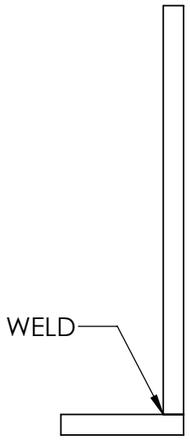

SIDE VIEW

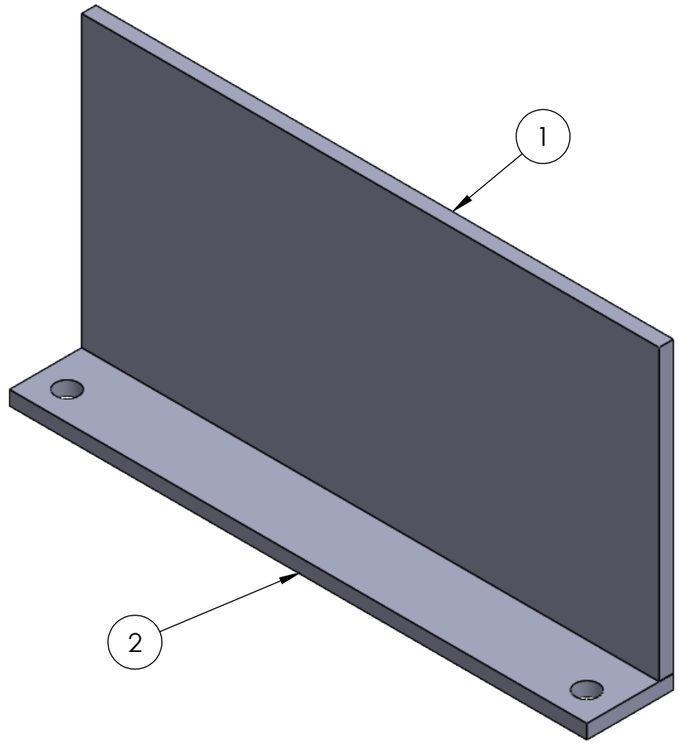

ISOMETRIC VIEW

TOP VIEW

ITEM NO.	DESCRIPTION	Material	QTY.
1	C Covering 1	Mild Steel	1
2	C Covering 2	Mild Steel	1

UNLESS OTHERWISE SPECIFIED:
DIMENSIONS ARE IN MILLIMETERS
SURFACE FINISH:
TOLERANCES:
LINEAR:
ANGULAR:

FINISH:

DEBURR AND BREAK SHARP EDGES

DO NOT SCALE DRAWING

REVISION

Karthik Swaminathan

	NAME	SIGNATURE	DATE
DRAWN			
CHK'D			
APPV'D			
MFG			
Q.A			

MATERIAL:

WEIGHT:

TITLE:

C_Covering

All Dimensions are in mm

A3

SCALE:1:1

SHEET 1 OF 1