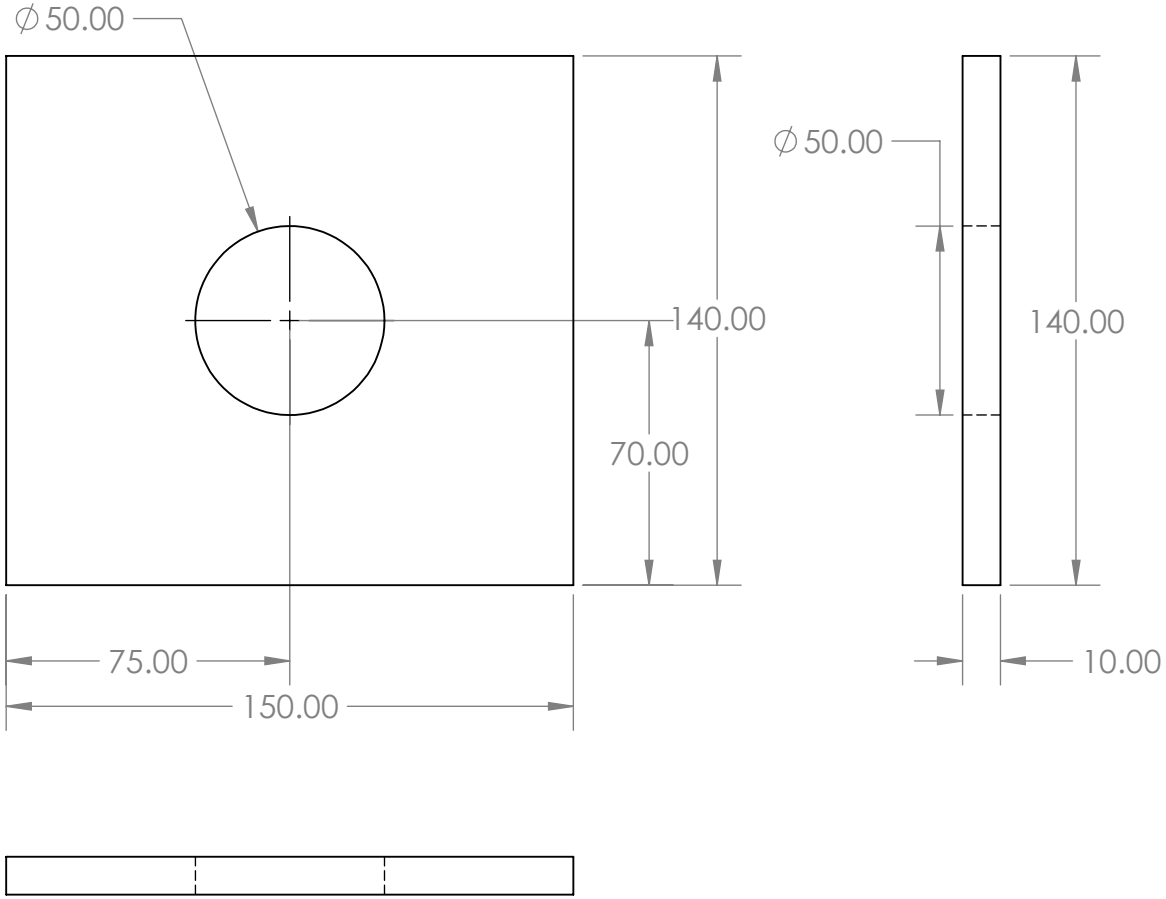

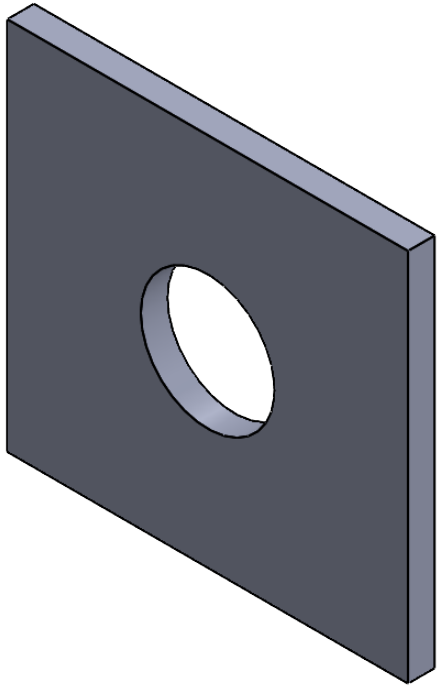

UNLESS OTHERWISE SPECIFIED: DIMENSIONS ARE IN MILLIMETERS SURFACE FINISH: TOLERANCES: LINEAR: ANGULAR:	FINISH:			DEBURR AND BREAK SHARP EDGES	DO NOT SCALE DRAWING	REVISION
					Karthik Swaminathan	
	NAME	SIGNATURE	DATE		TITLE: Vertical_Plate	
DRAWN						
CHK'D						
APPV'D						
MFG						
Q.A				MATERIAL: Mild Steel	All Dimensions are in mm	A4
				WEIGHT:	SCALE:1:2	SHEET 1 OF 1