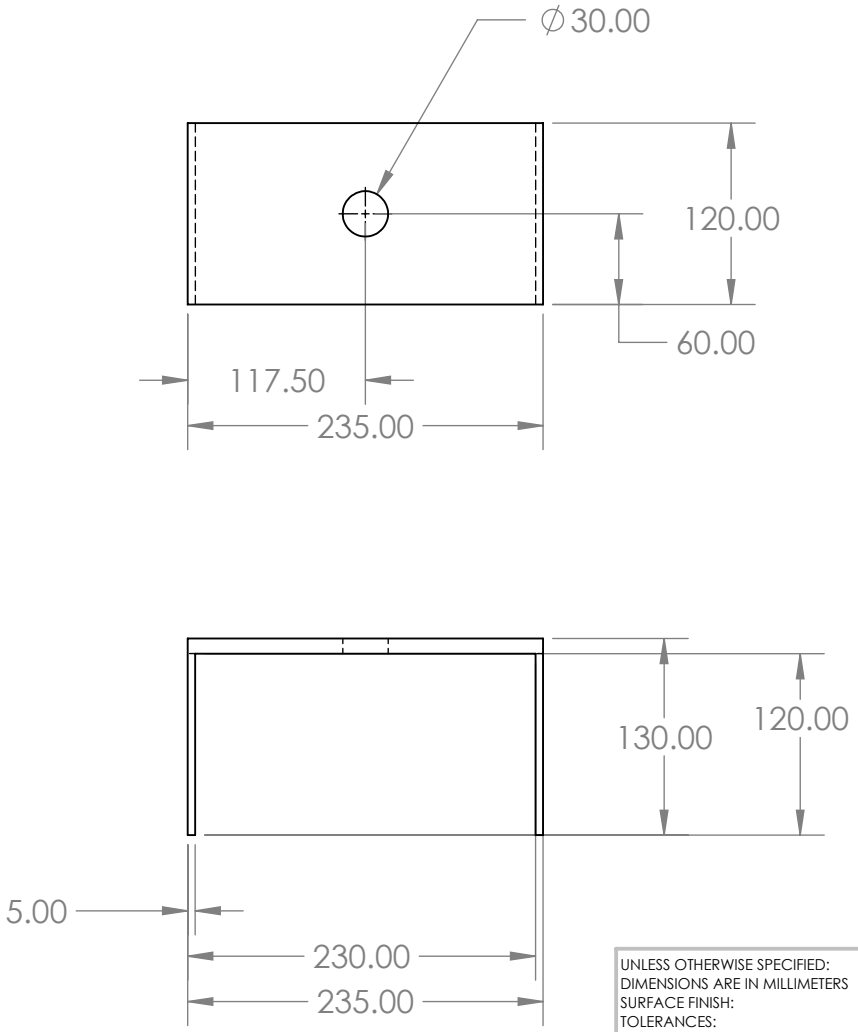

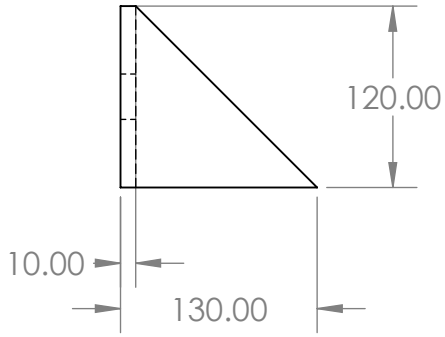

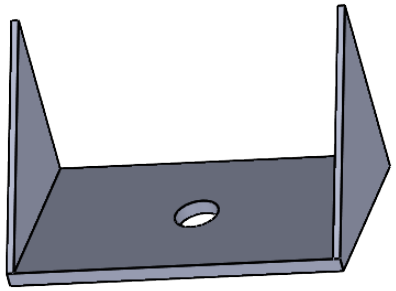

UNLESS OTHERWISE SPECIFIED: DIMENSIONS ARE IN MILLIMETERS SURFACE FINISH: TOLERANCES: LINEAR: ANGULAR:	FINISH:				DEBURR AND BREAK SHARP EDGES	DO NOT SCALE DRAWING / REVISION
						Karthik Swaminathan
	NAME	SIGNATURE	DATE			TITLE: Motor Extension Z
DRAWN						
CHK'D						
APPV'D						
MFG						
Q.A				MATERIAL: Mild Steel		All Dimensions are in mm / A4
				WEIGHT:		SCALE:1:5 / SHEET 1 OF 1