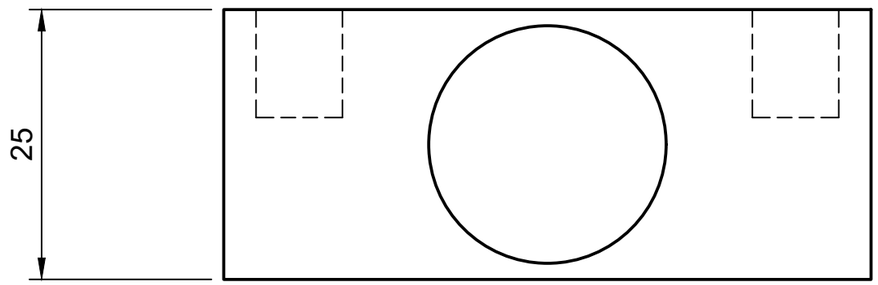


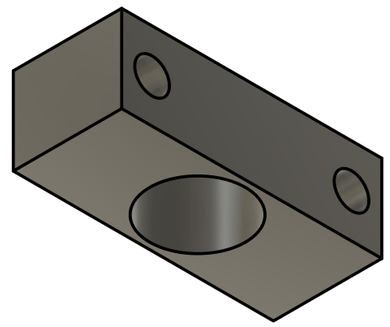

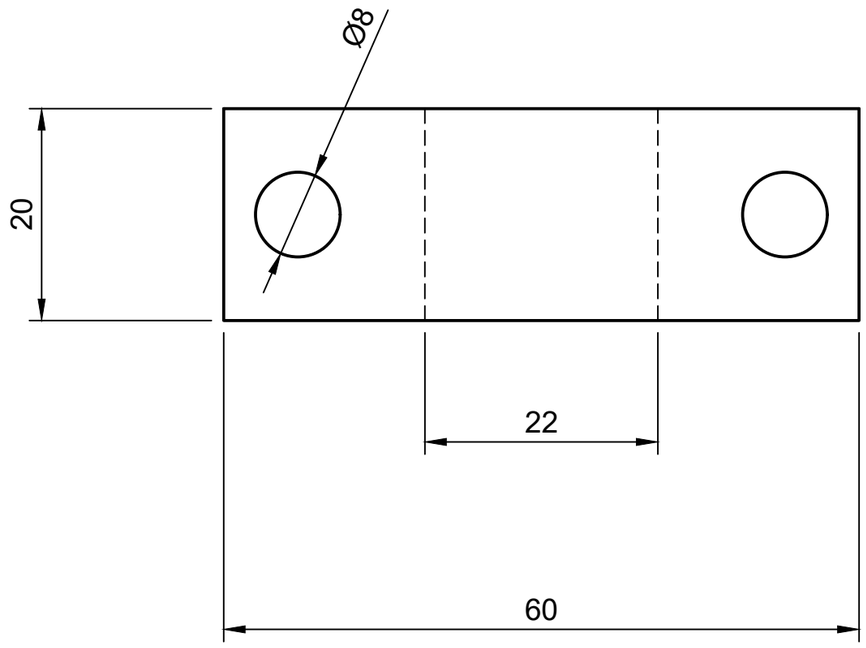


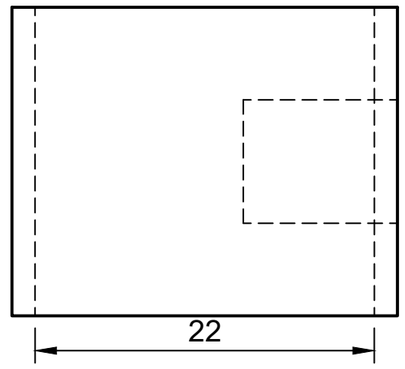


| Dept. | Technical reference | Created by<br>Karthik Swaminathan 17-06-2021 | Approved by | |
|---|---|---|---|---|
| | | Document type | Document status | |
| | | Title<br>Ball_Screw_Joint | DWG No. | |
| | | | Rev. / Date of issue | Sheet<br>1/1 |