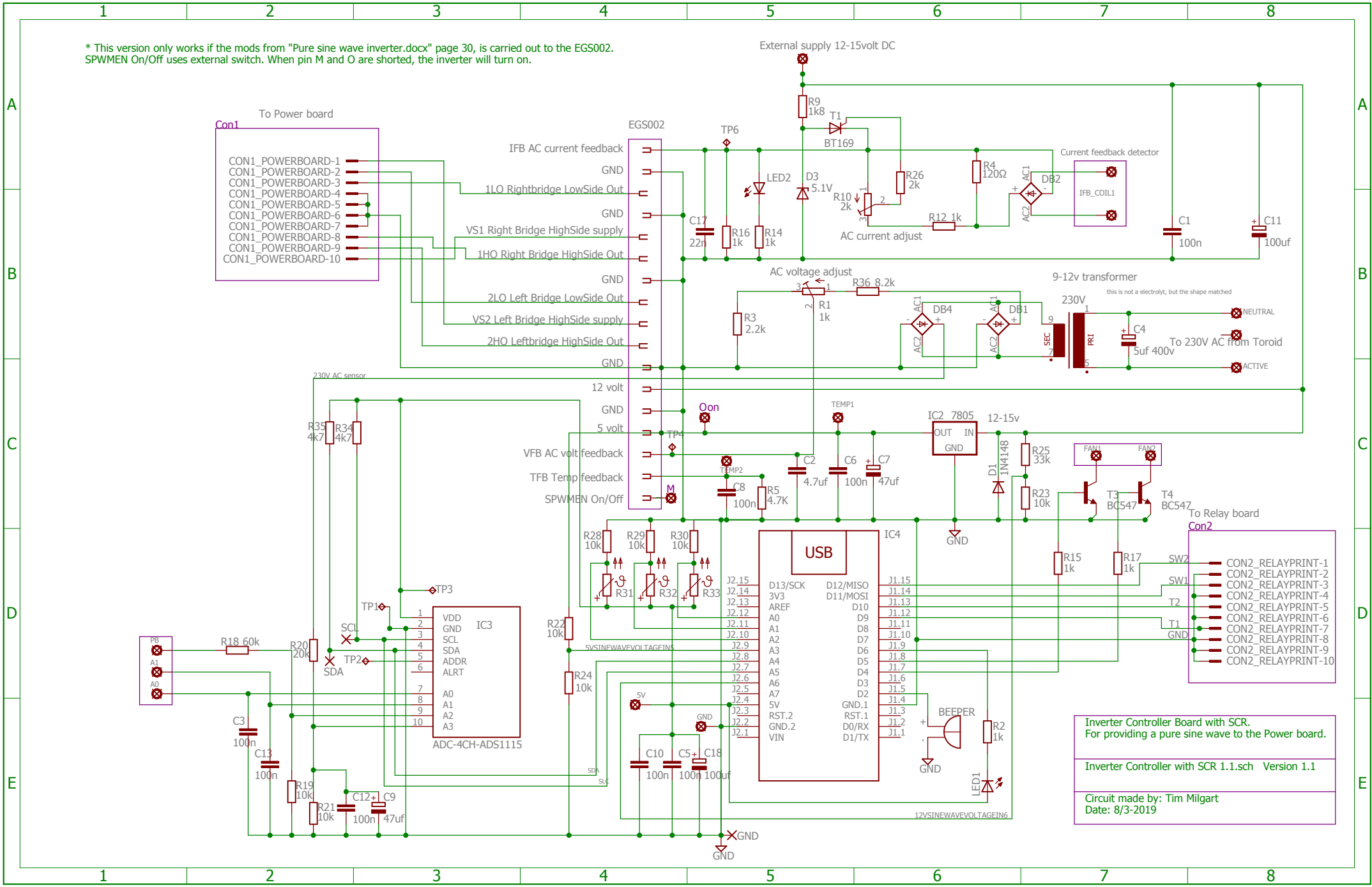
* This version only works if the mods from "Pure sine wave inverter.docx" page 30, is carried out to the EGS002.
SPWMEN On/Off uses external switch. When pin M and O are shorted, the inverter will turn on.
External supply 12-15volt DC
To Power board
Con1
CON1_POWERBOARD-1
CON1_POWERBOARD-2
CON1_POWERBOARD-3
CON1_POWERBOARD-4
CON1_POWERBOARD-5
CON1_POWERBOARD-6
CON1_POWERBOARD-7
CON1_POWERBOARD-8
CON1_POWERBOARD-9
CON1_POWERBOARD-10
EGS002
IFB AC current feedback
GND
1LO Rightbridge LowSide Out
GND
VS1 Right Bridge HighSide supply
1HO Right Bridge HighSide Out
GND
2LO Left Bridge LowSide Out
VS2 Left Bridge HighSide supply
2HO Leftbridge HighSide Out
GND
12 volt
GND
5 volt
VFB AC volt feedback
TFB Temp feedback
SPWMEN On/Off
TP6
R9 1k8
T1
BT169
LED2
D3 5.1V
R10 2k
R26 2k
R4 120Ω
DB2
Current feedback detector
IFB_COIL1
C17 22n
R16 1k
R14 1k
AC current adjust
R12 1k
C1 100n
C11 100uf
AC voltage adjust
R36 8.2k
R1 1k
R3 2.2k
DB4
DB1
9-12v transformer
this is not a electrolyt, but the shape matched
230V
NEUTRAL
C4 5uf 400v
To 230V AC from Toroid
ACTIVE
230V AC sensor
R35 4k7
R34 4k7
Oon
TEMP1
IC2 7805
OUT IN GND
12-15v
TP4
TEMP2
C2 4.7uf
C6 100n
C7 47uf
C8 100n
R5 4.7K
D1 1N4148
R25 33k
R23 10k
FAN1
FAN2
T3 BC547
T4 BC547
To Relay board
Con2
CON2_RELAYPRINT-1
CON2_RELAYPRINT-2
CON2_RELAYPRINT-3
CON2_RELAYPRINT-4
CON2_RELAYPRINT-5
CON2_RELAYPRINT-6
CON2_RELAYPRINT-7
CON2_RELAYPRINT-8
CON2_RELAYPRINT-9
CON2_RELAYPRINT-10
SW2
SW1
T2
T1
GND
R28 10k
R29 10k
R30 10k
R31
R32
R33
IC4
USB
D13/SCK
3V3
AREF
A0
A1
A2
A3
A4
A5
A6
A7
5V
RST.2
GND.2
VIN
D12/MISO
D11/MOSI
D10
D9
D8
D7
D6
D5
D4
D3
D2
GND.1
RST.1
D0/RX
D1/TX
R15 1k
R17 1k
TP3
TP1
SCL
SDA
TP2
IC3
VDD
GND
SCL
SDA
ADDR
ALRT
A0
A1
A2
A3
ADC-4CH-ADS1115
R22 10k
R24 10k
5VSINEWAVEVOLTAGEIN5
PB
A1
A0
R18 60k
R20 20k
C3 100n
C13 100n
R19 10k
R21 10k
C12 100n
C9 47uf
5V
GND
C10 100n
C5 100n
C18 100uf
BEEPER
R2 1k
LED1
12VSINEWAVEVOLTAGEIN6
GND
Inverter Controller Board with SCR.
For providing a pure sine wave to the Power board.
Inverter Controller with SCR 1.1.sch Version 1.1
Circuit made by: Tim Milgart
Date: 8/3-2019