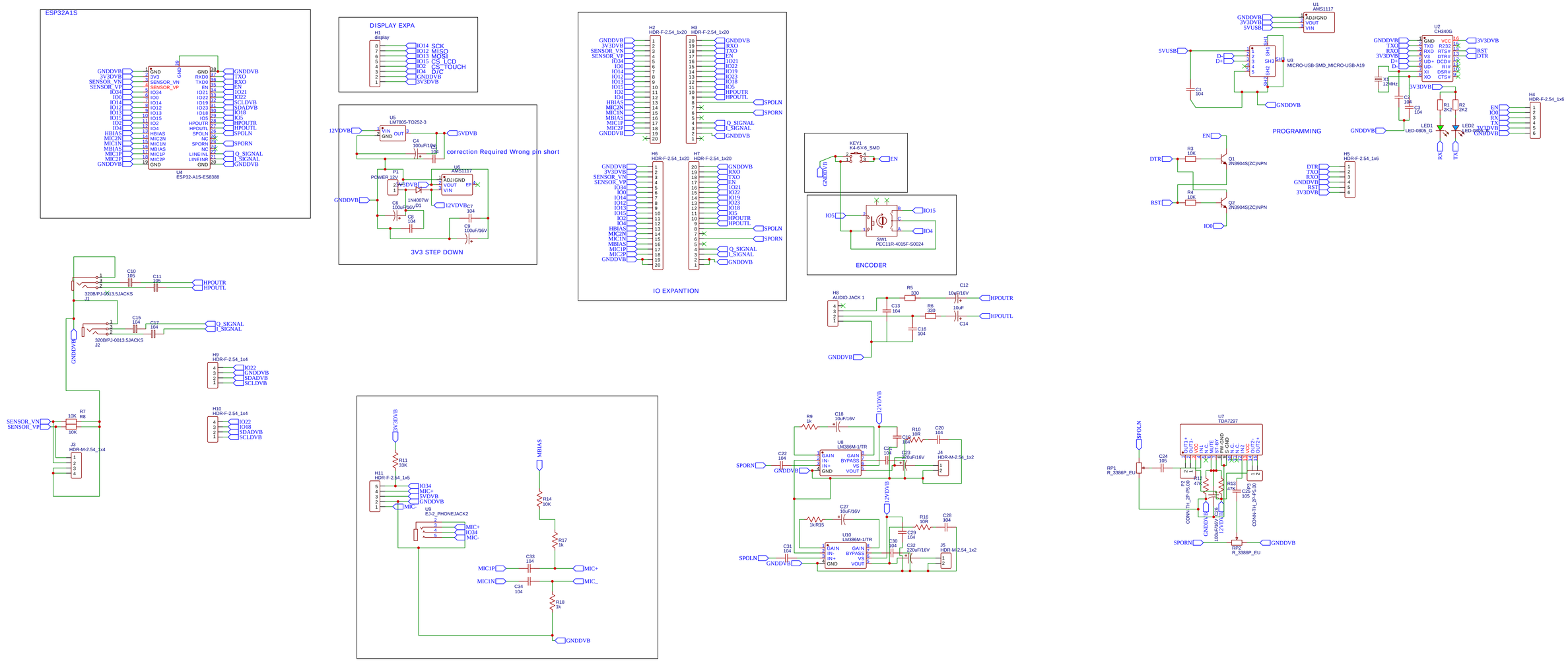

TITLE: ESP32A1S UI DISPLAY PROGRAM BOARD	REV: 1.0
Company: FAST ESS VU3UCK HAM PROJECTS	Sheet: 1/1
Date: 2022-11-17 Drawn By: SREERAJ	