Digital Locking System
with Unauthorized Access Alert

Report submitted by

CB.EN.U4ECE23212	**CHITTESH S**
CB.EN.U4ECE23246	**SRICHARAN RP**
CB.EN.U4ECE23249	**SUJITH KRISHNA PG**

in partial fulfillment of the requirements for the course

23ECE385 – Open Laboratory II

Department of Electronics and Communication Engineering,
Amrita School of Engineering,
Amrita Vishwa Vidyapeetham, Coimbatore – 641112

March 2026

Table of Contents

List of Figures **i**

1. Motivation **1**

2. Problem Statement **1**

2.1 Design Specifications 1

3. Design Procedure **2**

3.1 Mode Selection and System Reset 3

3.2 Keypad Input Stage 3

3.3 Encoding Stage 3

3.4 Password Storage 3

3.5 Password Comparison 4

3.6 Output Indication and Lock Control 4

4. Circuit Diagram / Board Layout / Schematic: **5**

4.1 Keypad and Encoder Circuit 5

4.2 Password Storage Circuit 5

4.3 Password Comparison Circuit 6

4.4 Overall Circuit 6

5. Simulation Results **7**

6. Implementation / Prototytping results **9**

7. Discussions and Conclusions **10**

8.References **11**

List of Figures

Figure No.	Figure Caption	Page No.
Fig. 3.1	Block Diagram	2
Fig. 4.1	Keypad Input and Decimal-to-Binary Encoder Circuit	5
Fig. 4.2	Password Storage Circuit	5
Fig. 4.3	Password Comparison Circuit	6
Fig. 4.4	Overall Circuit	6
Fig. 4.5	Top Layer PCB	7
Fig. 4.6	Bottom Layer PCB	7
Fig. 5.1	Saved Password for the digital lock	7
Fig. 5.2	Green LED for password match	8
Fig. 5.3	Red Led and Buzzer for password mismatch	8
Fig. 6.1	Binary representation of keypad input '5' displayed using blue LEDs	9
Fig. 6.2	Yellow LED for digit comparison and green LED for successful password verification	9
Fig. 6.3	Red LED indicating failed authentication	9

1. **Motivation**:

The motivation for this project arises from the need for secure, reliable, and cost-effective access control systems in everyday environments such as homes and offices. Traditional mechanical locks suffer from limitations including key loss, duplication, and mechanical wear, which can compromise security. While modern digital locks often rely on microcontrollers, they increase system cost and complexity. This project explores an alternative approach by designing a digital locking system using only basic digital logic components. The aim is to demonstrate how password storage, verification, and unauthorized access alerts can be implemented using discrete logic ICs, providing a simple, educational, and practical solution for secure electronic locking systems.

2. **Problem Statement**:

In modern security systems, protecting homes, offices, and personal belongings is an essential requirement. Conventional mechanical locking mechanisms are widely used but suffer from several limitations such as key loss, duplication, and gradual wear and tear. These issues can reduce reliability and compromise security. Although many digital locking systems are available, they often rely on microcontrollers, which increase system complexity, power consumption, and overall cost. Therefore, there is a need to design a simple, reliable, and low-cost electronic locking mechanism using basic digital logic components.

The objective of this project is to design and implement a **digital locking system with an unauthorized access alert** using discrete digital logic ICs. The system should securely store a user-defined password, verify the entered password, and provide appropriate feedback based on authentication results.

2.1 Design Specifications:

- The system must allow password entry using a numeric keypad.
- The entered password should be encoded into binary format for digital processing.
- A mechanism must be provided to store the password using shift registers.
- The system should compare the entered password with the stored password using digital logic circuits.

- When the password is correct, the system should indicate successful authentication using a green LED and activate the unlocking mechanism.
- When the password is incorrect, the system should trigger a red LED and buzzer as an unauthorized access alert.
- The system should include a reset function to clear the entered data and allow a new attempt.

3. **Design Procedure**:

The design of the digital locking system was carried out in a structured manner to ensure reliable password storage, verification, and unauthorized access detection. The system was divided into several functional stages including mode selection, keypad input, encoding, password storage, comparison, and output indication. The following subsections explain each stage of the design.

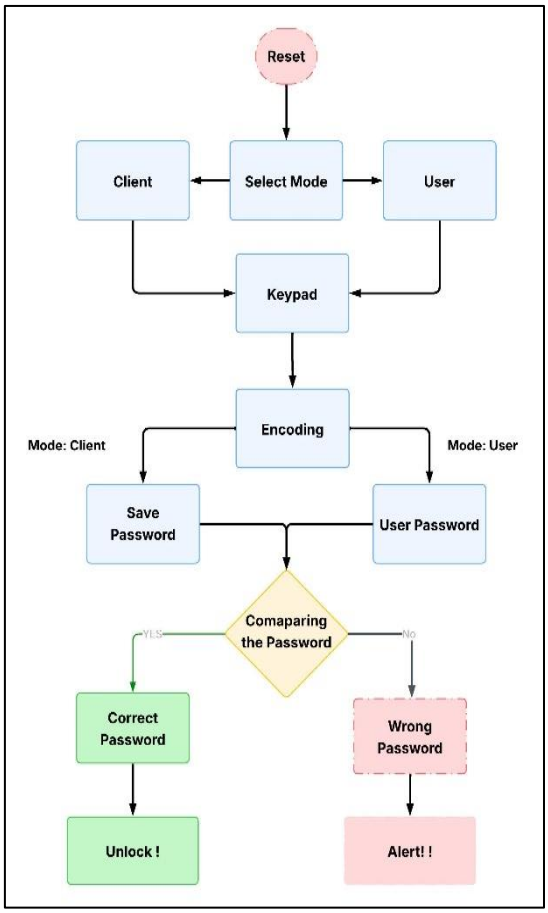

Fig. 3.1 Block Diagram

3.1 Mode Selection and System Reset

The system begins with a mode selection stage, where the operation of the circuit is determined. The user can choose between **Client Mode** and **User Mode** depending on the intended operation.

- **Client Mode:** Used to store or update the system password.
- **User Mode:** Used to enter a password for authentication.

A reset mechanism is also incorporated to clear the stored temporary inputs and bring the system back to its initial state. This ensures that incorrect entries do not remain stored and allows the system to start a new authentication cycle.

3.2 Keypad Input Stage

The keypad acts as the primary interface between the user and the digital locking system. When a user presses a numeric key, the keypad generates a corresponding decimal signal.

The keypad is connected to the digital processing stage so that each pressed key can be detected and processed sequentially. This stage ensures that the entered digits are captured accurately for further processing in the system.

3.3 Encoding Stage

The decimal output generated from the keypad cannot be directly processed by digital logic circuits. Therefore, the entered decimal digit is converted into a binary coded format using an encoder circuit.

The encoder converts each pressed key into a 4-bit binary output, which allows the digital system to process and store the entered password digits efficiently.

3.4 Password Storage

Depending on the selected mode, the encoded binary digits are routed to different storage paths.

- In **Client Mode**, the entered digits are stored as the saved password of the system.

- In **User Mode**, the entered digits are stored as the user input password.

Shift registers are used to store these binary values sequentially so that the entire password can be maintained within the circuit for comparison.

3.5 Password Comparison

At this stage, each corresponding bit of the stored password and the entered password is compared using digital logic comparison circuits. The system checks whether all digits match exactly.

- If all bits match, the comparison result becomes TRUE.
- If any digit differs, the comparison result becomes FALSE.

This stage determines whether authentication is successful or not.

3.6 Output Indication and Lock Control

Based on the result of the comparison stage, the system generates the appropriate output response.

- **Correct Password:**
  When the entered password matches the stored password, the system activates the unlocking mechanism. A green indicator LED is turned ON, and the lock is released.
- **Wrong Password:**
  If the entered password does not match the stored password, the system triggers an alert condition. A red LED and buzzer are activated to indicate an unauthorized access attempt.

This output stage ensures clear feedback to the user while also providing an alert mechanism for security.

4. Circuit Diagram / Board Layout / Schematic:

4.1 Keypad and Encoder Circuit

The keypad circuit, shown in **Fig. 4.1**, consists of push buttons used for entering the password digits. Each push button corresponds to a decimal input. The decimal inputs are connected to the 74147 priority encoder, which converts the pressed key into a 4-bit binary output. Since the encoder outputs are active low, NOT gates (74HC04) are used to convert them into proper binary signals for further digital processing.

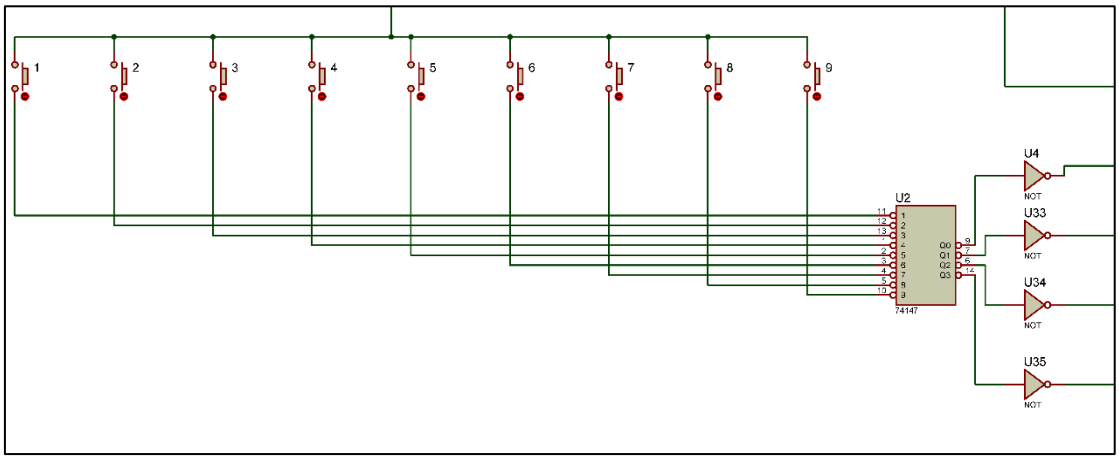

Fig. 4.1 Keypad Input and Decimal-to-Binary Encoder Circuit

4.2 Password Storage Circuit

The password storage circuit shown in **Fig. 4.2** uses 74194 universal shift registers to store the password digits. The stored password is maintained in the Saved Password registers, while the entered password is stored in the User Input registers. The shift registers allow sequential storage of the binary digits entered through the keypad and maintain the password for comparison.

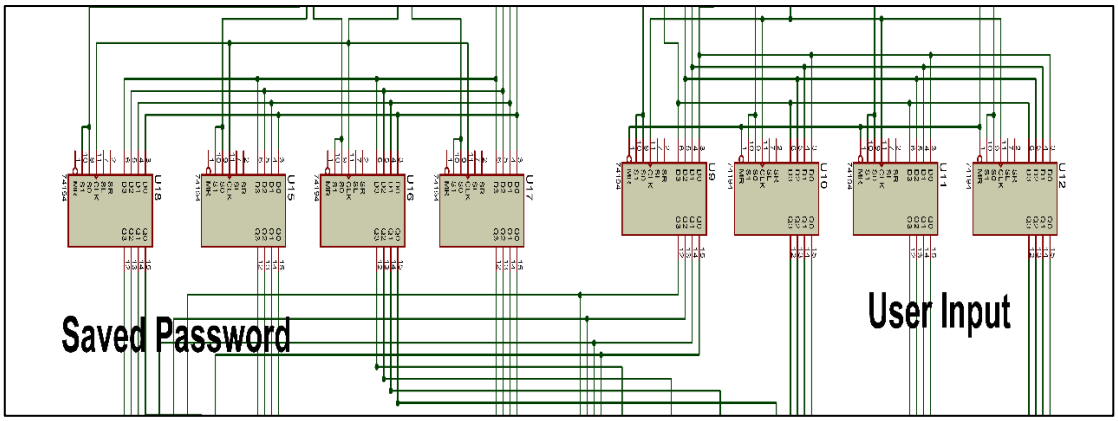

Fig. 4.2 Password Storage Circuit

4.3 Password Comparison Circuit

The password comparison circuit shown in **Fig. 4.3** uses XNOR gates (CD4077) to compare each bit of the stored password with the corresponding bit of the user-entered password. XNOR gates produce a HIGH output when both inputs are equal. The outputs of the XNOR gates are then combined using AND gates to determine whether all bits match.

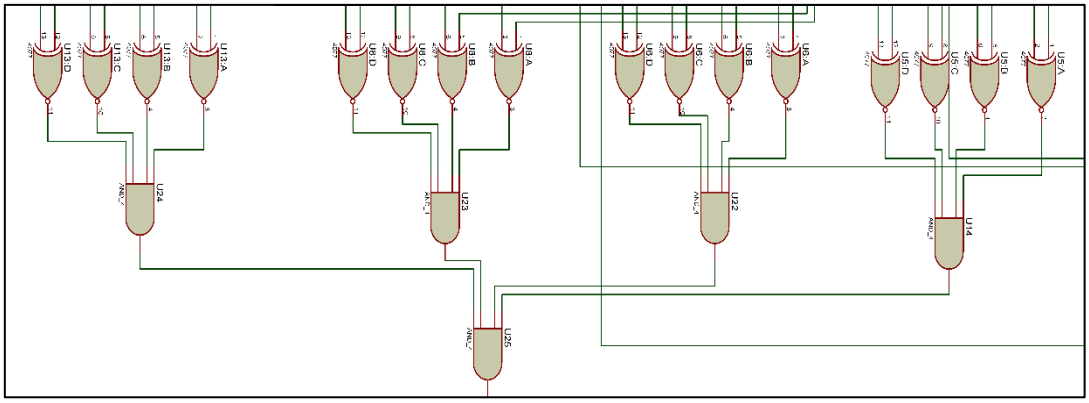

Fig. 4.3 Password Comparison Circuit

4.4 Overall Circuit

The overall circuit diagram shown in **Fig. 4.4** integrates all modules including the keypad input stage, encoding stage, password storage registers, comparison logic, and output indicators. When the entered password matches the stored password, the system activates the unlock indicator. If the password is incorrect, the circuit triggers the alert indicator and buzzer, indicating unauthorized access.

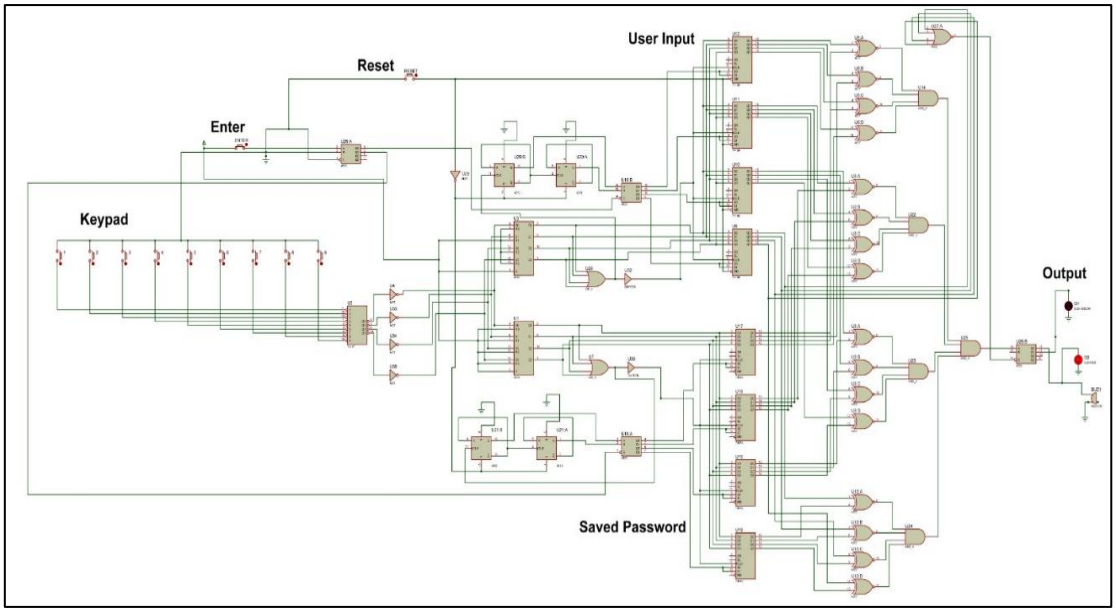

Fig. 4.4 Overall Circuit

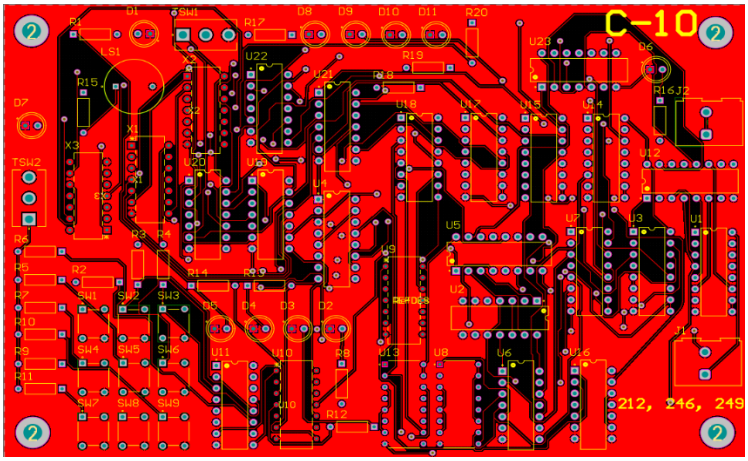

Fig. 4.5 Top Layer PCB

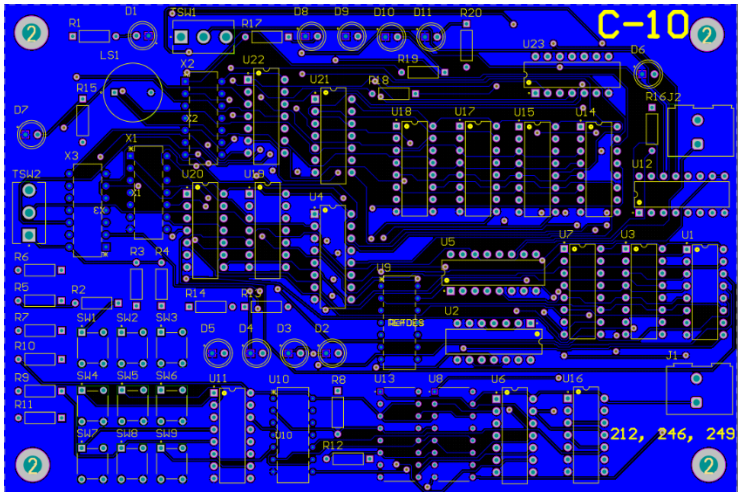

Fig. 4.6 Bottom Layer PCB

5. Simulation Results / Discussion:

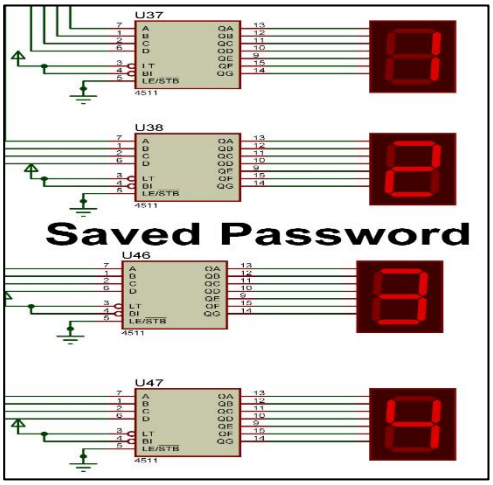

Fig. 5.1 Saved Password for the digital lock

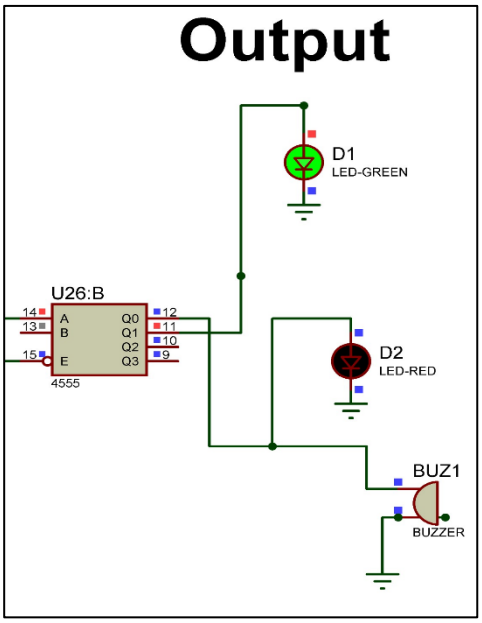

Fig. 5.2 Green LED for password match

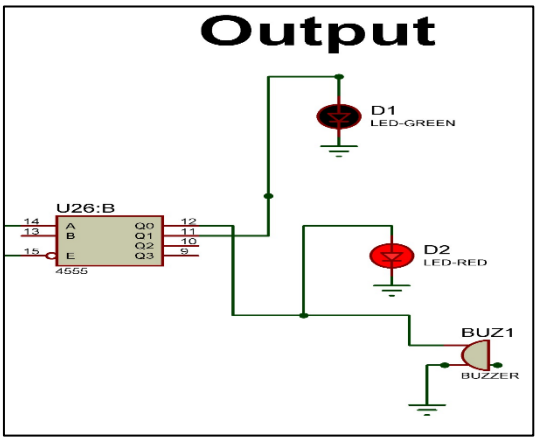

Fig. 5.3 Red Led and Buzzer for password mismatch

Figure 5.2 shows the simulation result when the user-entered password matches the stored password. The binary outputs from the shift registers corresponding to the saved password are compared using XNOR logic gates. When all bits match, the comparison logic produces a HIGH output. This output is passed through the AND gate stage and activates the control circuit. As a result, the green LED turns ON, indicating that the authentication is successful and the digital lock is opened.

Figure 5.3 illustrates the condition when the user-entered password does not match the stored password. In this case, at least one of the comparison outputs becomes LOW, which prevents the final AND gate from producing a HIGH signal. Consequently, the unlock mechanism remains inactive. Instead, the red LED turns

ON and the buzzer is triggered, indicating an incorrect password attempt and providing an unauthorized access alert.

6. Implementation / Prototytping results:

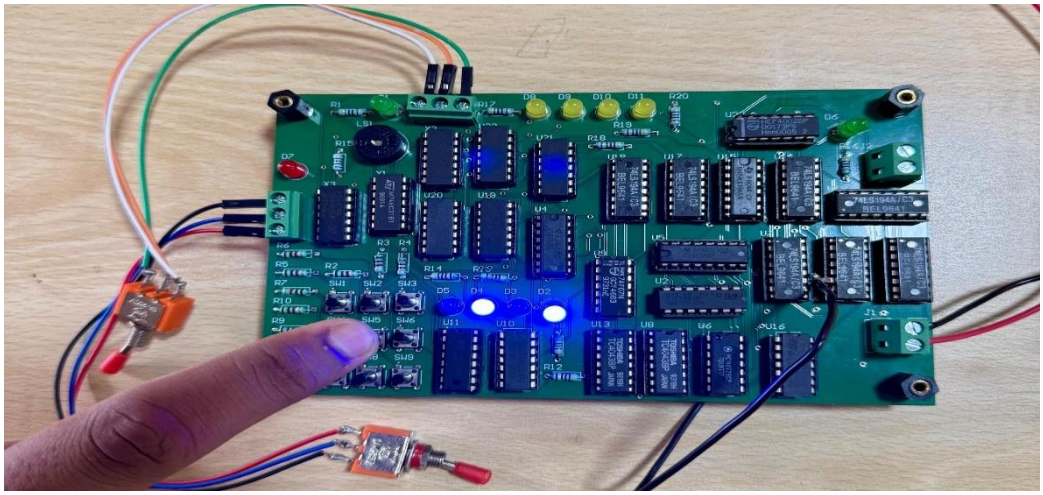

Fig. 6.1 Binary representation of keypad input '5' displayed using blue LEDs.

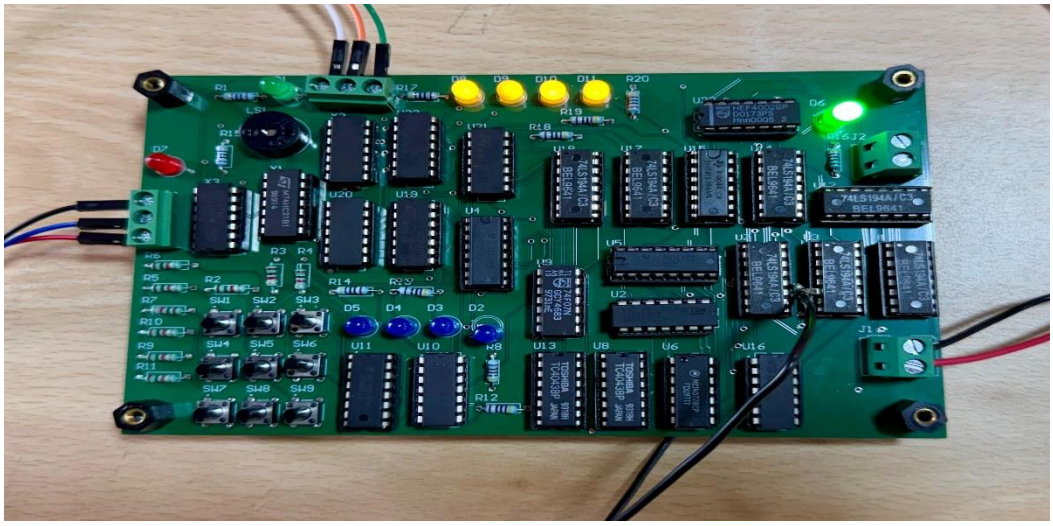

Fig. 6.2 Yellow LED for digit comparison and green LED for successful password verification

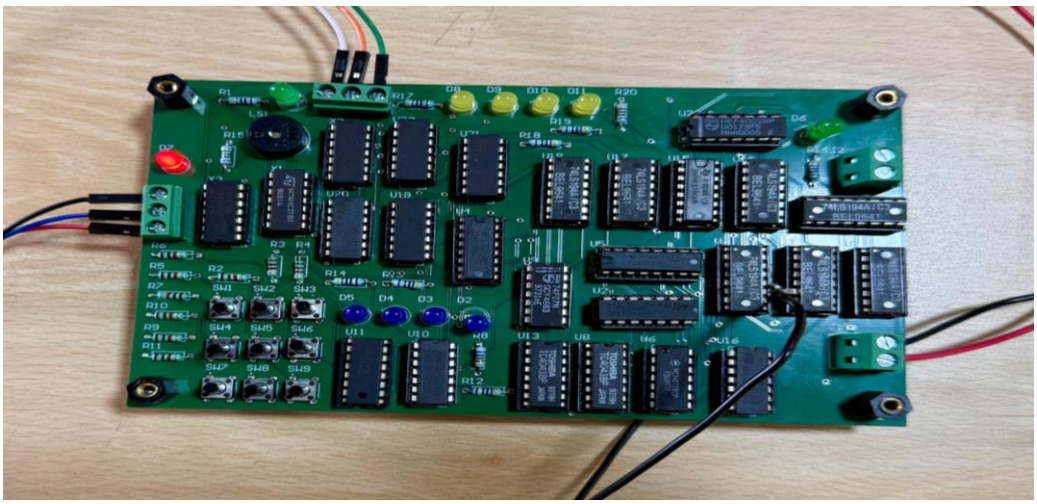

Fig. 6.3 Red LED indicating failed authentication

Figure 6.1 shows the hardware implementation of the digital locking system during the password entry stage. In this condition, the user presses the push-button keypad to enter the password digits. The corresponding LEDs on the board indicate the entered values and the system processes the input through the encoder and shift register stages. At this stage, the password verification process is still in progress and the system is waiting for the comparison result between the stored password and the user-entered password.

Figure 6.2 illustrates the condition when the user-entered password matches the stored password. The comparison logic verifies that all corresponding bits of the stored password and the user input are identical. When this equality condition is satisfied, the output control circuit is activated. As a result, the green LED indicator turns ON, representing successful authentication and unlocking of the system. This confirms that the digital locking mechanism operates correctly when the correct password is entered.

Figure 6.3 shows the hardware condition when the entered password does not match the stored password. During comparison, at least one digit differs, so the authentication condition is not satisfied. As a result, the red LED blinks, indicating unsuccessful authentication and password mismatch, while the system remains locked.

7. Discussion & Conclusions:

The hardware implementation of the digital locking system successfully reproduced the behavior observed in the simulation, proving the reliability of the discrete digital logic IC approach. The keypad input, encoder, shift registers, and comparison logic worked together to perform password storage and verification accurately. When the entered password matched the stored password, the yellow LEDs indicated successful digit comparison and the green LED confirmed authentication. When the password was incorrect, the red LED blinking and buzzer alert indicated unsuccessful authentication.

Although the system operated as expected, minor practical factors such as switch bounce and small propagation delays were observed during hardware testing. Future improvements could include integrating advanced security features. Overall, the project demonstrates an effective hardware-based digital locking system implemented using discrete logic components.

8. **References**:

[1] T. Kim, J. Lee and H. Park, "A Practical Digital Door Lock for Smart Home," in *Proc. IEEE Int. Conf. on Consumer Electronics (ICCE)*, 2018.

[2] A. O. Adewale and B. O. Oladipo, "Design and Construction of a 2-Digit Electronic Lock System Using Simple Circuit Elements and Digital Logic Gates," *ResearchGate Publication*, Mar. 15, 2017.

[3] A. Ibrahim, A. Paravath, P. K. Aswin, S. M. Iqbal and S. U. Abdulla, "GSM Based Digital Door Lock Security System," in *Proc. IEEE Int. Conf. on Power, Instrumentation, Control and Computing (PICC)*, 2015.

[4] S. Hari Kumar, *Programmable Number Lock*, Electronics Project, vol. 15.

[5] "Simple Combination Lock Experiment," *All About Circuits*. [Online]. Available: https://www.allaboutcircuits.com/textbook/experiments/chpt-7/simple-combination-lock/

[6] "Electronic Code Lock System Using IC," *Instructables*. [Online]. Available: https://www.instructables.com/Electronic-Code-Lock-System-Using-IC/